TMP468 9-Channel (8-Remote and 1-Local), High-Accuracy Temperature Sensor

1 Features

- 8-Channel Remote Diode Temperature Sensor Accuracy: ±0.75°C (Maximum)
- Local and Remote Diode Accuracy: ±0.75°C (Maximum)
- Local Temperature Sensor Accuracy for the DSBGA Package: ±0.35°C (Maximum)
- Temperature Resolution: 0.0625°C
- Supply and Logic Voltage Range: 1.7 V to 3.6 V
- 67-µA Operating Current (1 SPS, All Channels Active)
- 0.3-µA Shutdown Current
- Remote Diode: Series Resistance Cancellation, η-Factor Correction, Offset Correction, and Diode Fault Detection
- Register Lock Function Secures Key Registers
- I^2C or SMBus™ Compatible Two-Wire Interface With Pin-Programmable Address
- 16-Bump DSBGA and 16-Pin VQFN Packages

2 Applications

- MCU, GPU, ASIC, FPGA, DSP, and CPU Temperature Monitoring
- Telecommunication Equipment
- Servers and Personal Computers
- Cloud Ethernet Switches
- Secure Data Centers
- Highly Integrated Medical Systems
- Precision Instruments and Test Equipment
- LED Lighting Thermal Control

3 Description

The TMP468 device is a multi-zone, high-accuracy, low-power temperature sensor using a two-wire, SMBus or I^2C compatible interface. Up to eight remote diode-connected temperature zones can be monitored simultaneously in addition to the local temperature. Aggregating the temperature measurements across a system allows improved performance through tighter guard bands and can reduce board complexity. A typical use case is for monitoring the temperature across different processors, such as MCUs, GPUs, and FPGAs in complex systems such as servers and telecommunications equipment. Advanced features such as series resistance cancellation, programmable non-ideality factor, programmable offset, and programmable temperature limits are included to provide a robust thermal monitoring solution with improved accuracy and noise immunity.

Each of the eight remote channels (and the local channel) can be programmed independently with two thresholds that are triggered when the corresponding temperature is exceeded at the measured location. In addition, there is a programmable hysteresis setting to avoid constant toggling around the threshold.

The TMP468 device provides high accuracy (0.75°C) and high resolution (0.0625°C) measurement capabilities. The device supports low voltage rails (1.7 V to 3.6 V), common two-wire interfaces, and is available in a small, space efficient package (3 mm × 3 mm or 1.6 mm × 1.6 mm) for easy integration into computing systems. The remote junction supports a temperature range from –55°C to +150°C.

Device Information(1)

PART NUMBER	PACKAGE	BODY SIZE (NOM)
TMP468	DSBGA (16)	1.60 mm × 1.60 mm
	VQFN (16)	3.00 mm × 3.00 mm

(1) For all available packages, see the orderable addendum at the end of the data sheet.

Typical Application Schematic

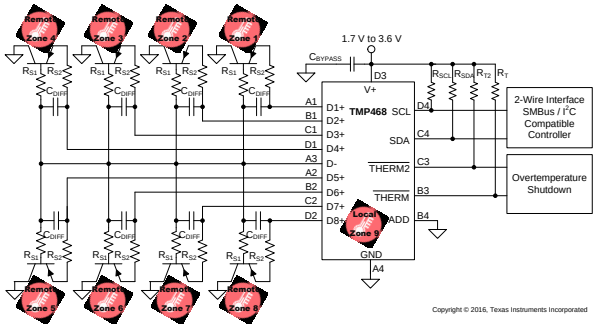

See the *Design Requirements* section for remote diode recommendations.

An IMPORTANT NOTICE at the end of this data sheet addresses availability, warranty, changes, use in safety-critical applications, intellectual property matters and other important disclaimers. PRODUCTION DATA.

Table of Contents

1 **Features** ... 1
2 **Applications** ... 1
3 **Description** ... 1
4 **Revision History** ... 2
5 **Pin Configuration and Functions** ... 3
6 **Specifications** ... 5
6.1 Absolute Maximum Ratings ... 5
6.2 ESD Ratings ... 5
6.3 Recommended Operating Conditions ... 5
6.4 Thermal Information ... 5
6.5 Electrical Characteristics ... 6
6.6 Two-Wire Timing Requirements ... 7
6.7 Typical Characteristics ... 8
7 **Detailed Description** ... 10
7.1 Overview ... 10
7.2 Functional Block Diagram ... 10
7.3 Feature Description ... 11
7.4 Device Functional Modes ... 13
7.5 Programming ... 13
7.6 Register Maps ... 19
8 **Application and Implementation** ... 29
8.1 Application Information ... 29
8.2 Typical Application ... 30
9 **Power Supply Recommendations** ... 33
10 **Layout** ... 34
10.1 Layout Guidelines ... 34
10.2 Layout Example ... 35
11 **Device and Documentation Support** ... 37
11.1 Receiving Notification of Documentation Updates 37
11.2 Community Resources ... 37
11.3 Trademarks ... 37
11.4 Electrostatic Discharge Caution ... 37
11.5 Glossary ... 37
12 **Mechanical, Packaging, and Orderable Information** ... 37

4 Revision History

NOTE: Page numbers for previous revisions may differ from page numbers in the current version.

Changes from Revision A (March 2017) to Revision B	Page
• Updated packaging information	37

Changes from Original (November 2016) to Revision A	Page
• Added 16-pin VQFN package version throughout data sheet.	1
• Deleted *Description (cont.)* section and moved text to *Description* section	1
• Added VQFN package and body size information to *Device Information* table	1
• Added copyright statement to *Typical Application Schematic*	1
• Added RGT (VQFN) pinout diagram in the *Pin Configuration and Functions* section	4
• Added remote junction temperature parameter and values to *Recommended Operating Conditions* table	5
• Changed formatting of *Thermal Information* table note	5
• Changed TMP468 *Thermal Information* table package from "RGT (QFN)" to "RGT (VQFN)"	5
• Updated formatting of *Two-Wire Timing Requirements* table	7
• Changed *Timing Requirements* table note parameter from $t_{VD;DATA}$ to $t_{VD;DAT}$	7
• Added 2017 copyright to Functional Block Diagram	10
• Changed table headers in *Continuous Conversion Times* table	26
• Added 2017 copyright to Typical Application schematic in *Application Information* section	30
• Changed η-factor setting from 1.003674 to 1.0067 in Figure 23 table note in *Typical Application* section	30
• Changed conversion rate from 16 conversions/second to 1 conversion/second in the *Detailed Design Procedure* section	32
• Changed units of Equation 7 from "µs" to "µA"	32

Copyright © 2016–2017, Texas Instruments Incorporated

5 Pin Configuration and Functions

TMP468 YFF Package
16-Pin DSBGA
Bottom View

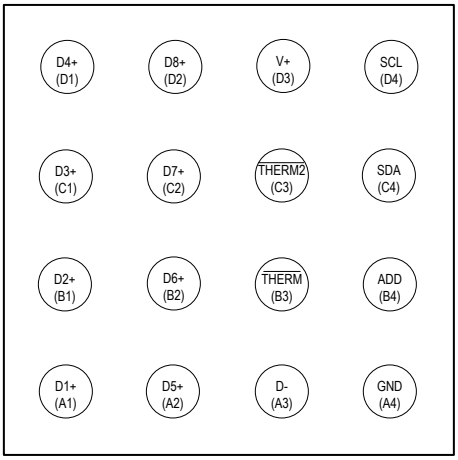

Pin Functions

PIN		I/O	DESCRIPTION
NAME	NO.		
ADD	B4	Digital input	Address select. Connect to GND, V+, SDA, or SCL.
D1+	A1	Analog input	Positive connection to remote temperature sensors. A total of 8 remote channels are supported. An unused channel must be connected to D–.
D2+	B1	Analog input	Positive connection to remote temperature sensors. A total of 8 remote channels are supported. An unused channel must be connected to D–.
D3+	C1	Analog input	Positive connection to remote temperature sensors. A total of 8 remote channels are supported. An unused channel must be connected to D–.
D4+	D1	Analog input	Positive connection to remote temperature sensors. A total of 8 remote channels are supported. An unused channel must be connected to D–.
D5+	A2	Analog input	Positive connection to remote temperature sensors. A total of 8 remote channels are supported. An unused channel must be connected to D–.
D6+	B2	Analog input	Positive connection to remote temperature sensors. A total of 8 remote channels are supported. An unused channel must be connected to D–.
D7+	C2	Analog input	Positive connection to remote temperature sensors. A total of 8 remote channels are supported. An unused channel must be connected to D–.
D8+	D2	Analog input	Positive connection to remote temperature sensors. A total of 8 remote channels are supported. An unused channel must be connected to D–.
D–	A3	Analog input	Negative connection to remote temperature sensors. Common for 8 remote channels.
GND	A4	Ground	Supply ground connection
SCL	D4	Digital input	Serial clock line for I^2C- or SMBus compatible two-wire interface. Requires a pullup resistor to a voltage between 1.7 V and 3.6 V (not necessarily V+) if driven by an open-drain output.
SDA	C4	Bidirectional digital input/output	Serial data line for I^2C or SMBus compatible two-wire interface. Open-drain; requires a pullup resistor to a voltage between 1.7 V and 3.6 V, not necessarily V+.
$\overline{\text{THERM}}$	B3	Digital output	Thermal shutdown or fan-control pin. Active low; open-drain; requires a pullup resistor to a voltage between 1.7 V and 3.6 V, not necessarily V+. If this pin is not used it may be left open or grounded.
$\overline{\text{THERM2}}$	C3	Digital output	Second $\overline{\text{THERM}}$ output. Active low; open-drain; requires a pullup resistor to a voltage between 1.7 V and 3.6 V, not necessarily V+. If this pin is not used it may be left open or grounded.
V+	D3	Power supply	Positive supply voltage, 1.7 V to 3.6 V; requires 0.1-µF bypass capacitor to ground.

Copyright © 2016–2017, Texas Instruments Incorporated

TMP468 RGT Package
16-Pin VQFN
Top View

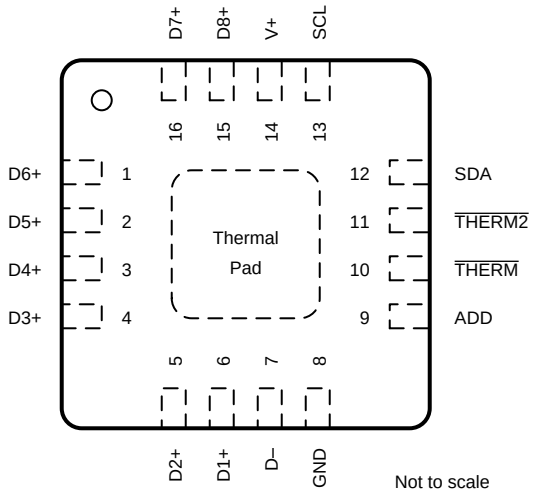

NC - No internal connection

Pin Functions

PIN		I/O	DESCRIPTION
NAME	NO.		
ADD	9	Digital input	Address select. Connect to GND, V+, SDA, or SCL.
D1+	6	Analog input	Positive connection to remote temperature sensors. A total of 8 remote channels are supported. An unused channel must be connected to D–.
D2+	5	Analog input	Positive connection to remote temperature sensors. A total of 8 remote channels are supported. An unused channel must be connected to D–.
D3+	4	Analog input	Positive connection to remote temperature sensors. A total of 8 remote channels are supported. An unused channel must be connected to D–.
D4+	3	Analog input	Positive connection to remote temperature sensors. A total of 8 remote channels are supported. An unused channel must be connected to D–.
D5+	2	Analog input	Positive connection to remote temperature sensors. A total of 8 remote channels are supported. An unused channel must be connected to D–.
D6+	1	Analog input	Positive connection to remote temperature sensors. A total of 8 remote channels are supported. An unused channel must be connected to D–.
D7+	16	Analog input	Positive connection to remote temperature sensors. A total of 8 remote channels are supported. An unused channel must be connected to D–.
D8+	15	Analog input	Positive connection to remote temperature sensors. A total of 8 remote channels are supported. An unused channel must be connected to D–.
D–	7	Analog input	Negative connection to remote temperature sensors. Common for 8 remote channels.
GND	8	Ground	Supply ground connection
SCL	13	Digital input	Serial clock line for I^2C or SMBus-compatible two-wire interface. Requires a pullup resistor to a voltage between 1.7 V and 3.6 V (not necessarily V+) if driven by an open-drain output.
SDA	12	Bidirectional digital input/output	Serial data line for I^2C- or SMBus-compatible two-wire interface. Open-drain; requires a pullup resistor to a voltage between 1.7 V and 3.6 V, not necessarily V+.
$\overline{\text{THERM}}$	10	Digital output	Thermal shutdown or fan-control pin. Active low; open-drain; requires a pullup resistor to a voltage between 1.7 V and 3.6 V, not necessarily V+. If this pin is not used it may be left open or grounded.
$\overline{\text{THERM2}}$	11	Digital output	Second $\overline{\text{THERM}}$ output. Active low; open-drain; requires a pullup resistor to a voltage between 1.7 V and 3.6 V, not necessarily V+. If this pin is not used it may be left open or grounded.
V+	14	Power supply	Positive supply voltage, 1.7 V to 3.6 V; requires 0.1-µF bypass capacitor to ground.

Copyright © 2016–2017, Texas Instruments Incorporated

6 Specifications

6.1 Absolute Maximum Ratings

over operating free-air temperature range (unless otherwise noted)[(1)]

		MIN	MAX	UNIT
Power supply	V+	–0.3	6	V
Input voltage	$\overline{\text{THERM}}$, $\overline{\text{THERM2}}$, SDA, SCL, and ADD only	–0.3	6	V
	D1+ through D8+	–0.3	((V+) + 0.3) and ≤ 6	
	D– only	–0.3	0.3	
Input current	SDA sink	–25		mA
	All other pins	–10	10	
Operating temperature		–55	150	°C
Junction temperature (T_J, maximum)			150	°C
Storage temperature, T_{stg}		–60	150	°C

(1) Stresses beyond those listed under *Absolute Maximum Ratings* may cause permanent damage to the device. These are stress ratings only, which do not imply functional operation of the device at these or any other conditions beyond those indicated under *Recommended Operating Conditions*. Exposure to absolute-maximum-rated conditions for extended periods may affect device reliability.

6.2 ESD Ratings

			VALUE	UNIT
$V_{(ESD)}$	Electrostatic discharge	Human body model (HBM), per ANSI/ESDA/JEDEC JS-001[(1)]	±2000	V
		Charged device model (CDM), JEDEC specification JESD22-C101[(2)]	±750	

(1) JEDEC document JEP155 states that 500-V HBM allows safe manufacturing with a standard ESD control process.
(2) JEDEC document JEP157 states that 250-V CDM allows safe manufacturing with a standard ESD control process.

6.3 Recommended Operating Conditions

over operating free-air temperature range (unless otherwise noted)

		MIN	NOM	MAX	UNIT
V+	Supply voltage	1.7		3.6	V
T_A	Operating free-air temperature	–40		125	°C
T_D	Remote junction temperature	–55		150	°C

6.4 Thermal Information

THERMAL METRIC[(1)]		TMP468		UNIT
		RGT (VQFN)	YFF (DSBGA)	
		16 PINS	16 PINS	
$R_{\theta JA}$	Junction-to-ambient thermal resistance	46	76	°C/W
$R_{\theta JC(top)}$	Junction-to-case (top) thermal resistance	43	0.7	°C/W
$R_{\theta JB}$	Junction-to-board thermal resistance	17	13	°C/W
ψ_{JT}	Junction-to-top characterization parameter	0.8	0.4	°C/W
ψ_{JB}	Junction-to-board characterization parameter	5	13	°C/W

(1) For more information about traditional and new thermal metrics, see the *Semiconductor and IC Package Thermal Metrics* application report.

6.5 Electrical Characteristics

at T_A = –40°C to +125°C and V+ = 1.7 V to 3.6 V (unless otherwise noted)

PARAMETER			TEST CONDITIONS	MIN	TYP	MAX	UNIT
TEMPERATURE MEASUREMENT							
T_{LOCAL}	Local temperature sensor accuracy		T_A = 20°C to 30°C, V+ = 1.7 V to 2 V (DSBGA)	–0.35	±0.125	0.35	°C
			T_A = –40°C to 125°C, V+ = 1.7 V to 2 V (DSBGA)	–0.75	±0.125	0.75	°C
			T_A = –40°C to 100°C, V+ = 1.7 V to 3.6 V (VQFN)				
			T_A = –40°C to 125°C, V+ = 1.7 V to 3.6 V	–1	±0.5	1	°C
T_{REMOTE}	Remote temperature sensor accuracy		(DSBGA): T_A = –10°C to 50°C, T_D = –55°C to 150°C V+ = 1.7 V to 3.6 V	–0.75	±0.125	0.75	°C
			(VQFN): T_A = –10°C to 85°C, T_D = –55°C to 150°C V+ = 1.7 V to 3.6 V				
			T_A = –40°C to 125°C, T_D = –55°C to 150°C V+ = 1.7 V to 3.6 V	–1	±0.5	1	
	Local temperature error supply sensitivity		V+ = 1.7 V to 3.6 V	–0.15	±0.05	0.15	°C/V
	Remote temperature error supply sensitivity		V+ = 1.7 V to 3.6 V	–0.25	±0.1	0.25	°C/V
	Temperature resolution (local and remote)				0.0625		°C
	ADC conversion time		One-shot mode, per channel (local or remote)		16	17	ms
	ADC resolution				13		Bits
	Remote sensor source current	High	Series resistance 1 kΩ (maximum)		120		µA
		Medium			45		
		Low			7.5		
η	Remote transistor ideality factor				1.008		
SERIAL INTERFACE (SCL, SDA)							
V_{IH}	High-level input voltage			0.7 × (V+)			V
V_{IL}	Low-level input voltage					0.3 × (V+)	V
	Hysteresis				200		mV
	SDA output-low sink current			20			mA
V_{OL}	Low-level output voltage		I_O = –20 mA, V+ ≥ 2 V		0.15	0.4	V
			I_O = –15 mA, V+ < 2 V			0.2 × V+	V
	Serial bus input leakage current		0 V ≤ V_{IN} ≤ 3.6 V	–1		1	µA
	Serial bus input capacitance				4		pF
DIGITAL INPUTS (ADD)							
V_{IH}	High-level input voltage			0.7 × (V+)			V
V_{IL}	Low-level input voltage			–0.3		0.3 × (V+)	V
	Input leakage current		0 V ≤ V_{IN} ≤ 3.6 V	–1		1	µA
	Input capacitance				4		pF
DIGITAL OUTPUTS ($\overline{THERM}$, $\overline{THERM2}$)							
	Output-low sink current		V_{OL} = 0.4 V	6			mA
V_{OL}	Low-level output voltage		I_O = –6 mA		0.15	0.4	V
I_{OH}	High-level output leakage current		V_O = V+			1	µA
POWER SUPPLY							
V+	Specified supply voltage range			1.7		3.6	V
I_Q	Quiescent current		Active conversion, local sensor		240	375	µA
			Active conversion, remote sensors		400	600	
			Standby mode (between conversions)		15	21	
			Shutdown mode, serial bus inactive		0.3	4	
			Shutdown mode, serial bus active, f_S = 400 kHz		120		µA
			Shutdown mode, serial bus active, f_S = 2.56 MHz		300		µA
POR	Power-on-reset threshold		Rising edge		1.5	1.65	V
			Falling edge	1	1.2	1.35	
POH	Power-on-reset hysteresis				0.2		V

Copyright © 2016–2017, Texas Instruments Incorporated

6.6 Two-Wire Timing Requirements

at T_A = –40°C to +125°C and V+ = 1.7 V to 3.6 V (unless otherwise noted)
The master and the slave have the same V+ value. Values are based on statistical analysis of samples tested during initial release.

			MIN	MAX	UNIT
f_{SCL}	SCL operating frequency	Fast mode	0.001	0.4	MHz
		High-speed mode	0.001	2.56	
t_{BUF}	Bus free time between stop and start condition	Fast mode	1300		ns
		High-speed mode	160		
$t_{HD;STA}$	Hold time after repeated start condition. After this period, the first clock is generated.	Fast mode	600		ns
		High-speed mode	160		
$t_{SU;STA}$	Repeated start condition setup time	Fast mode	600		ns
		High-speed mode	160		
$t_{SU;STO}$	Stop condition setup time	Fast mode	600		ns
		High-speed mode	160		
$t_{HD;DAT}$	Data hold time when SDA	Fast mode	0		(1)ns
		High-speed mode	0	130	
$t_{VD;DAT}$	Data valid time (2)	Fast mode	0	900	ns
		High-speed mode	—	—	
$t_{SU;DAT}$	Data setup time	Fast mode	100		ns
		High-speed mode	20		
t_{LOW}	SCL clock low period	Fast mode	1300		ns
		High-speed mode	250		
t_{HIGH}	SCL clock high period	Fast mode	600		ns
		High-speed mode	60		
t_F – SDA	Data fall time	Fast mode	20 × (V+ / 5.5)	300	ns
		High-speed mode		100	
t_F, t_R – SCL	Clock fall and rise time	Fast mode		300	ns
		High-speed mode		40	
t_R	Rise time for SCL ≤ 100 kHz	Fast mode		1000	ns
		High-speed mode			
	Serial bus timeout	Fast mode	15	20	ms
		High-speed mode	15	20	

(1) The maximum $t_{HD;DAT}$ can be 0.9 µs for fast mode, and is less than the maximum $t_{VD;DAT}$ by a transition time.
(2) $t_{VD;DAT}$ = time for data signal from SCL LOW to SDA output (HIGH to LOW, depending on which is worse).

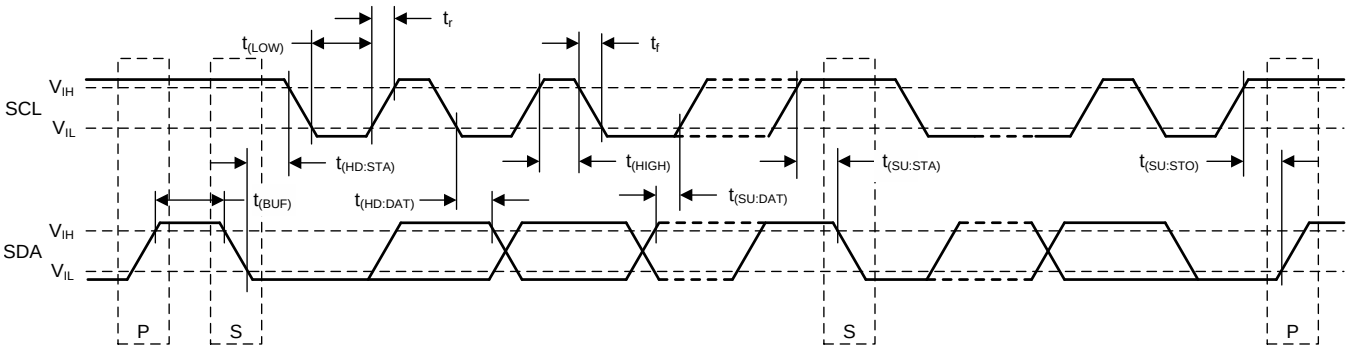

Figure 1. Two-Wire Timing Diagram

6.7 Typical Characteristics

at T_A = 25°C and V+ = 3.6 V (unless otherwise noted)

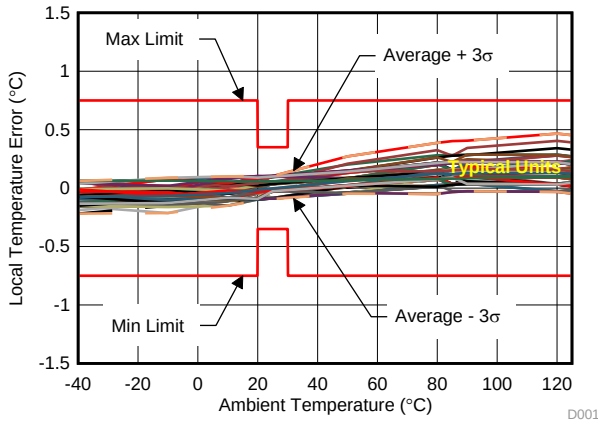

Typical behavior of 95 DSBGA devices over temperature at V+ = 1.8 V

Figure 2. Local Temperature Error vs Ambient Temperature

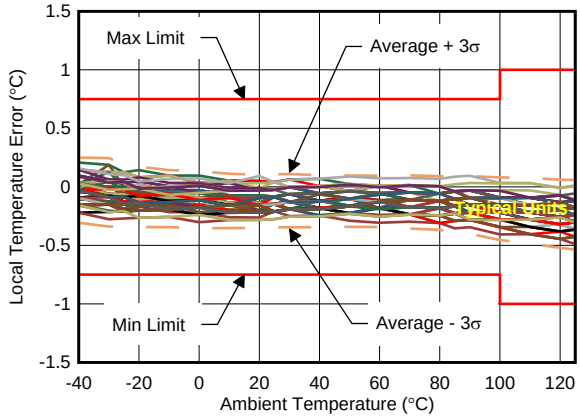

Typical behavior of 75 VQFN devices over temperature at V+ = 1.8 V

Figure 3. Local Temperature Error vs Ambient Temperature

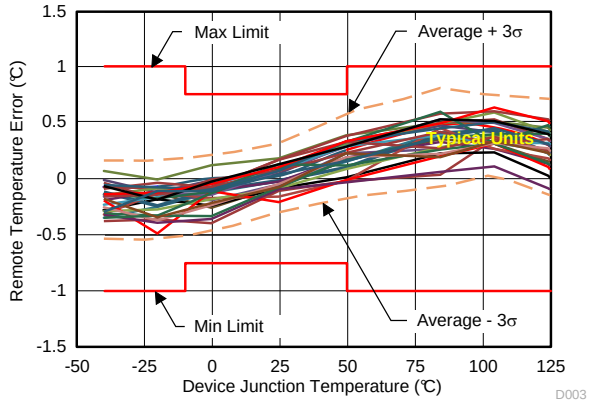

Typical behavior of 30 DSBGA devices over temperature at V+ = 1.8 V with the remote diode junction at 150°C.

Figure 4. Remote Temperature Error vs Device Junction Temperature

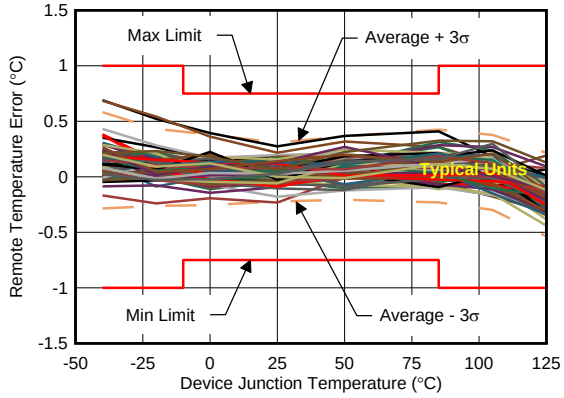

Typical behavior of 75 VQFN devices over temperature at V+ = 1.8 V with the remote diode junction at 150°C.

Figure 5. Remote Temperature Error vs Device Junction Temperature

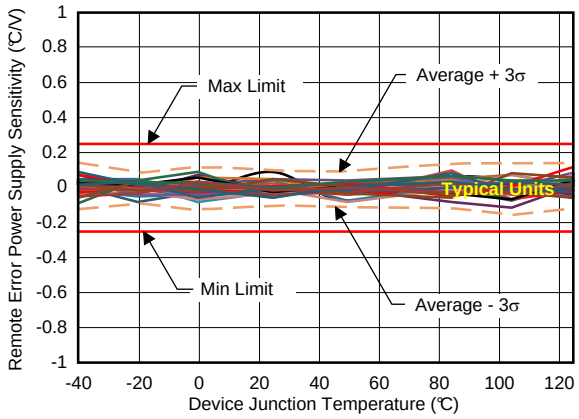

Typical behavior of 30 devices over temperature with V+ from 1.8 V to 3.6 V

Figure 6. Remote Temperature Error Power Supply Sensitivity vs Device Junction Temperature

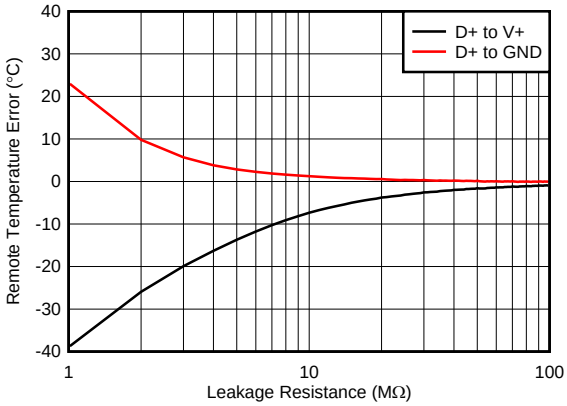

Figure 7. Remote Temperature Error vs Leakage Resistance

Copyright © 2016–2017, Texas Instruments Incorporated

Typical Characteristics (continued)

at T_A = 25°C and V+ = 3.6 V (unless otherwise noted)

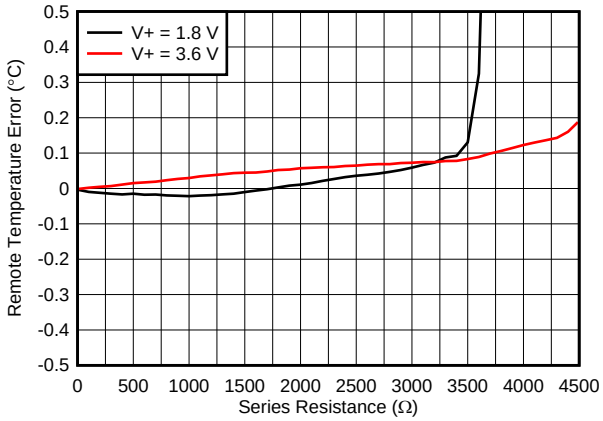

No physical capacitance during measurement

Figure 8. Remote Temperature Error vs Series Resistance

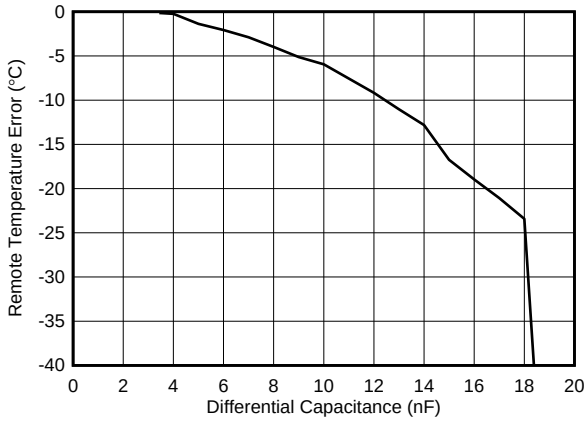

No physical series resistance on D+, D– pins during measurement

Figure 9. Remote Temperature Error vs Differential Capacitance

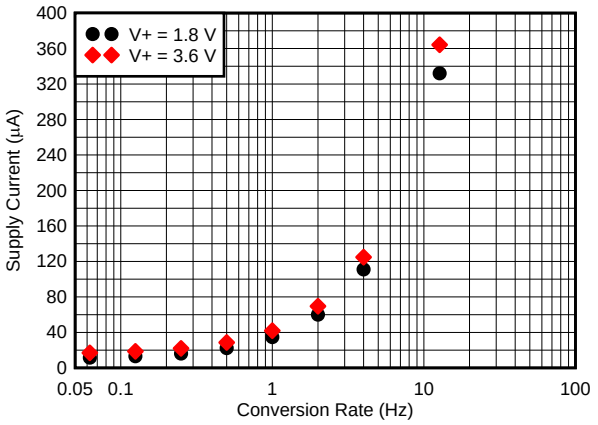

Figure 10. Quiescent Current vs Conversion Rate °

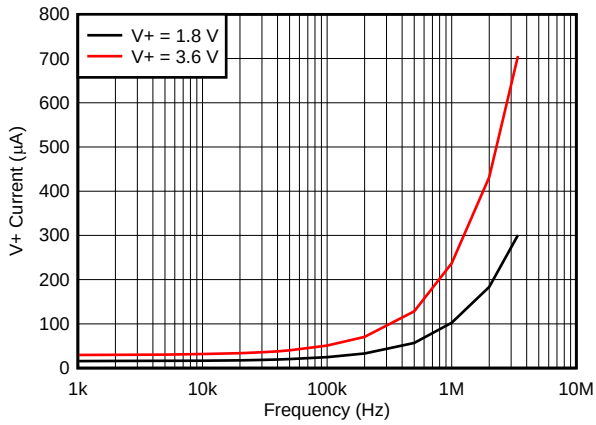

16 samples per second (default mode)

Figure 11. Shutdown Quiescent Current vs SCL Clock Frequency

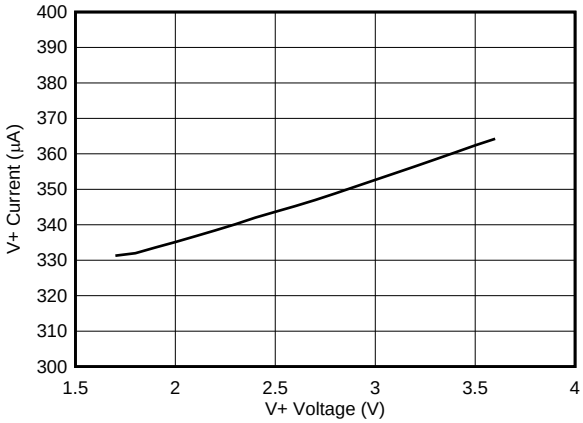

Figure 12. Quiescent Current vs Supply Voltage (at Default Conversion Rate of 16 Conversions Per Second)

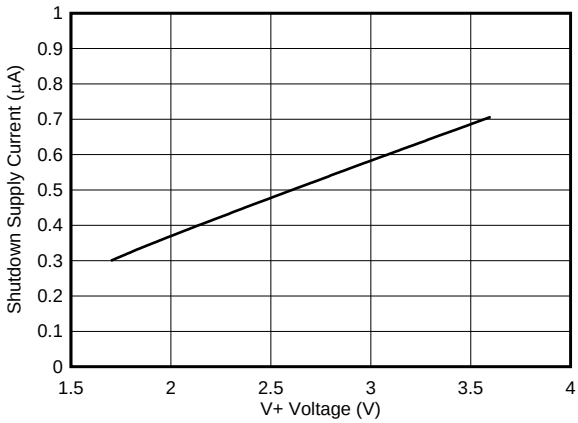

Figure 13. Shutdown Quiescent Current vs Supply Voltage

7 Detailed Description

7.1 Overview

The TMP468 device is a digital temperature sensor that combines a local temperature measurement channel and eight remote-junction temperature measurement channels in VQFN-16 or DSBGA-16 packages. The device has a two-wire-interface that is compatible with I^2C or SMBus interfaces and includes four pin-programmable bus address options. The TMP468 is specified over a local device temperature range from –40°C to +125°C. The TMP468 device also contains multiple registers for programming and holding configuration settings, temperature limits, and temperature measurement results. The TMP468 pinout includes $\overline{\text{THERM}}$ and $\overline{\text{THERM2}}$ outputs that signal overtemperature events based on the settings of temperature limit registers.

7.2 Functional Block Diagram

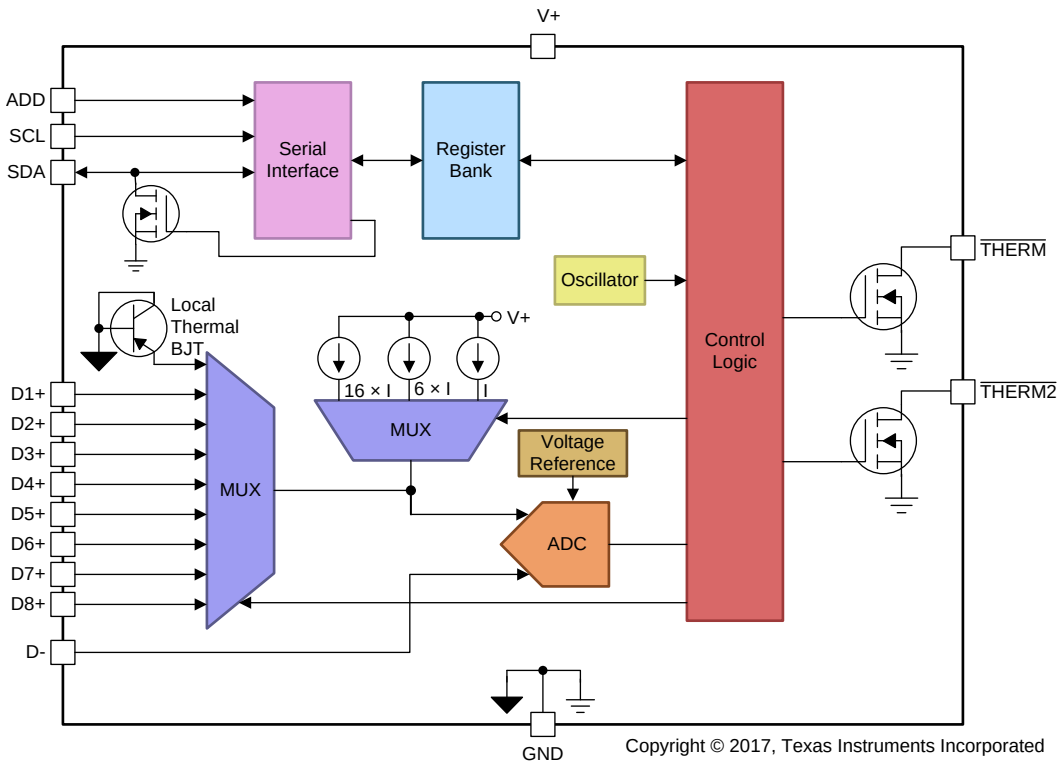

Copyright © 2016–2017, Texas Instruments Incorporated

7.3 Feature Description

7.3.1 Temperature Measurement Data

The local and remote temperature sensors have a resolution of 13 bits (0.0625°C). Temperature data that result from conversions within the default measurement range are represented in binary form, as shown in the *Standard Binary* column of Table 1. Negative numbers are represented in two's-complement format. The resolution of the temperature registers extends to 255.9375°C and down to –256°C, but the actual device is limited to ranges as specified in the *Electrical Characteristics* table to meet the accuracy specifications. The TMP468 device is specified for ambient temperatures ranging from –40°C to +125°C; parameters in the *Absolute Maximum Ratings* table must be observed to prevent damage to the device.

Table 1. Temperature Data Format (Local and Remote Temperature)

TEMPERATURE (°C)	LOCAL OR REMOTE TEMPERATURE REGISTER VALUE (0.0625°C RESOLUTION)	
	STANDARD BINARY(1)	
	BINARY	HEX
–64	1110 0000 0000 0000	E0 00
–50	1110 0111 0000 0000	E7 00
–25	1111 0011 1000 0000	F3 80
–0.1250	1111 1111 1111 0000	FF F0
–0.0625	1111 1111 1111 1000	FF F8
0	0000 0000 0000 0000	00 00
0.0625	0000 0000 0000 1000	00 08
0.1250	0000 0000 0001 0000	00 10
0.1875	0000 0000 0001 1000	00 18
0.2500	0000 0000 0010 0000	00 20
0.3125	0000 0000 0010 1000	00 28
0.3750	0000 0000 0011 0000	00 30
0.4375	0000 0000 0011 1000	00 38
0.5000	0000 0000 0100 0000	00 40
0.5625	0000 0000 0100 1000	00 48
0.6250	0000 0000 0101 0000	00 50
0.6875	0000 0000 0101 1000	00 58
0.7500	0000 0000 0110 0000	00 60
0.8125	0000 0000 0110 1000	00 68
0.8750	0000 0000 0111 0000	00 70
0.9375	0000 0000 0111 1000	00 78
1	0000 0000 1000 0000	00 80
5	0000 0010 1000 0000	02 80
10	0000 0101 0000 0000	05 00
25	0000 1100 1000 0000	0C 80
50	0001 1001 0000 0000	19 00
75	0010 0101 1000 0000	25 80
100	0011 0010 0000 0000	32 00
125	0011 1110 1000 0000	3E 80
127	0011 1111 1000 0000	3F 80
150	0100 1011 0000 0000	4B 00
175	0101 0111 1000 0000	57 80
191	0101 1111 1000 0000	5F 80

(1) Resolution is 0.0625°C per count. Negative numbers are represented in two's-complement format.

Both local and remote temperature data use two bytes for data storage with a two's-complement format for negative numbers. The high byte stores the temperature with 2°C resolution. The second or low byte stores the decimal fraction value of the temperature and allows a higher measurement resolution, as shown in Table 1. The measurement resolution for both the local and the remote channels is 0.0625°C.

7.3.2 Series Resistance Cancellation

Series resistance cancellation automatically eliminates the temperature error caused by the resistance of the routing to the remote transistor or by the resistors of the optional external low-pass filter. A total up to 1-kΩ series resistance can be cancelled by the TMP468 device, which eliminates the need for additional characterization and temperature offset correction. See Figure 8 for details on the effects of series resistance on sensed remote temperature error.

7.3.3 Differential Input Capacitance

The TMP468 device tolerates differential input capacitance of up to 1000 pF with minimal change in temperature error. The effect of capacitance on the sensed remote temperature error is illustrated in Figure 9.

7.3.4 Sensor Fault

The TMP468 device can sense a fault at the D+ resulting from an incorrect diode connection. The TMP468 device can also sense an open circuit. Short-circuit conditions return a value of –256°C. The detection circuitry consists of a voltage comparator that trips when the voltage at D+ exceeds (V+) – 0.3 V (typical). The comparator output is continuously checked during a conversion. If a fault is detected, then the RxOP bit in the Remote Channel Status register is set to 1.

When not using the remote sensor with the TMP468 device, the corresponding D+ and D– inputs must be connected together to prevent meaningless fault warnings.

7.3.5 $\overline{\text{THERM}}$ Functions

Operation of the $\overline{\text{THERM}}$ (pin B3) and $\overline{\text{THERM2}}$ (pin C3) interrupt pins are shown in Figure 14.

The hysteresis value is stored in the $\overline{\text{THERM}}$ Hysteresis register and applies to both the $\overline{\text{THERM}}$ and $\overline{\text{THERM2}}$ interrupts.

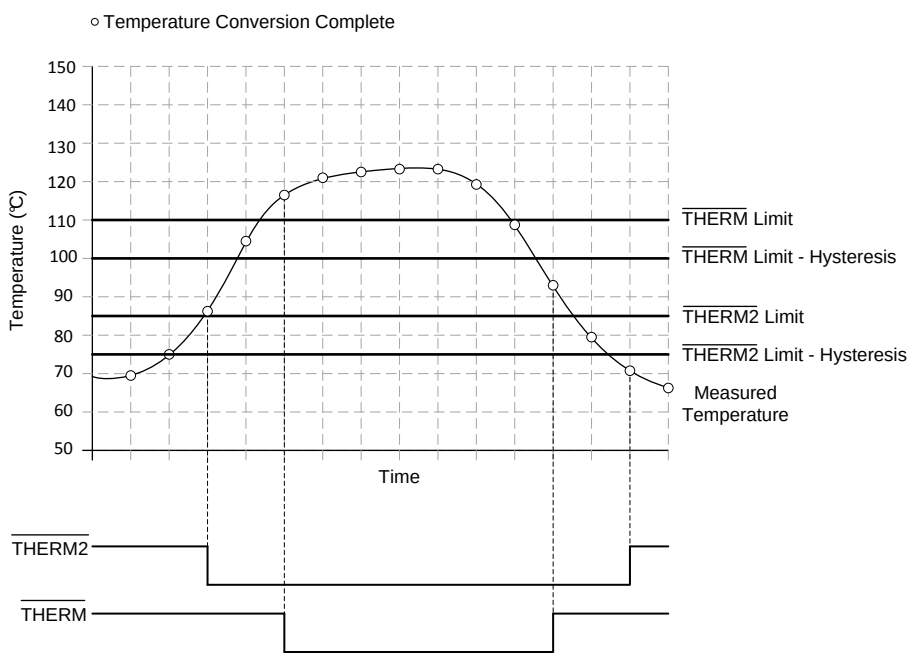

Figure 14. $\overline{\text{THERM}}$ and $\overline{\text{THERM2}}$ Interrupt Operation

Copyright © 2016–2017, Texas Instruments Incorporated

7.4 Device Functional Modes

7.4.1 Shutdown Mode (SD)

The TMP468 shutdown mode enables the user to save maximum power by shutting down all device circuitry other than the serial interface, and reducing current consumption to typically less than 0.3 μA; see Figure 13. Shutdown mode is enabled when the shutdown bit (SD, bit 5) of the Configuration Register is HIGH; the device shuts down immediately once the current conversion is complete. When the SD bit is LOW, the device maintains a continuous-conversion state.

7.5 Programming

7.5.1 Serial Interface

The TMP468 device operates only as a slave device on the two-wire bus (I^2C or SMBus). Connections to either bus are made using the open-drain I/O lines, SDA, and SCL. The SDA and SCL pins feature integrated spike suppression filters and Schmitt triggers to minimize the effects of input spikes and bus noise. The TMP468 device supports the transmission protocol for fast (1 kHz to 400 kHz) and high-speed (1 kHz to 2.56 MHz) modes. All data bytes are transmitted MSB first.

While the TMP468 device is unpowered bus traffic on SDA and SCL may continue without any adverse effects to the communication or to the TMP468 device itself. As the TMP468 device is powering up, the device does not load the bus, and as a result the bus traffic may continue undisturbed.

7.5.1.1 Bus Overview

The TMP468 device is compatible with the I^2C or SMBus interface. In I^2C or SMBus protocol, the device that initiates the transfer is called a *master*, and the devices controlled by the master are *slaves*. The bus must be controlled by a master device that generates the serial clock (SCL), controls the bus access, and generates the start and stop conditions.

To address a specific device, a start condition is initiated. A start condition is indicated by pulling the data line (SDA) from a high-to-low logic level when SCL is high. All slaves on the bus shift in the slave address byte, with the last bit indicating whether a read or write operation is intended. During the ninth clock pulse, the addressed slave responds to the master by generating an *acknowledge* (ACK) bit and pulling SDA low.

Data transfer is then initiated and sent over eight clock pulses followed by an acknowledge bit (ACK). During data transfer, SDA must remain stable when SCL is high. A change in SDA when SCL is high is interpreted as a control signal. The TMP468 device has a word register structure (16-bit wide), with data writes always requiring two bytes. Data transfer occurs during the ACK at the end of the second byte.

After all data are transferred, the master generates a stop condition. A stop condition is indicated by pulling SDA from low to high when SCL is high.

Copyright © 2016–2017, Texas Instruments Incorporated

Programming (continued)

7.5.1.2 Bus Definitions

The TMP468 device has a two-wire interface that is compatible with the I²C or SMBus interface. Figure 15 through Figure 20 illustrate the timing for various operations on the TMP468 device. The bus definitions are as follows:

Bus Idle: Both SDA and SCL lines remain high.

Start Data Transfer: A change in the state of the SDA line (from high to low) when the SCL line is high defines a start condition. Each data transfer initiates with a start condition.

Stop Data Transfer: A change in the state of the SDA line (from low to high) when the SCL line is high defines a stop condition. Each data transfer terminates with a repeated start or stop condition.

Data Transfer: The number of data bytes transferred between a start and stop condition is not limited and is determined by the master device. The receiver acknowledges the data transfer.

Acknowledge: Each receiving device, when addressed, is obliged to generate an acknowledge bit. A device that acknowledges must pull down the SDA line during the acknowledge clock pulse in such a way that the SDA line is stable low during the high period of the acknowledge clock pulse. Take setup and hold times into account. On a master receive, data transfer termination can be signaled by the master generating a not-acknowledge on the last byte that is transmitted by the slave.

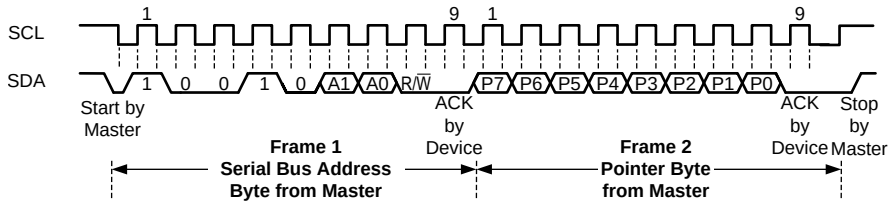

Figure 15. Two-Wire Timing Diagram for Write Pointer Byte

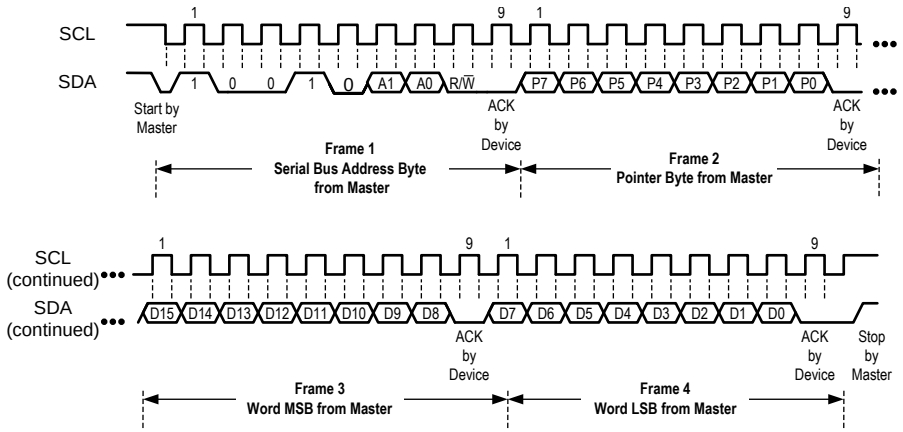

Figure 16. Two-Wire Timing Diagram for Write Pointer Byte and Value Word

Copyright © 2016–2017, Texas Instruments Incorporated

Programming (continued)

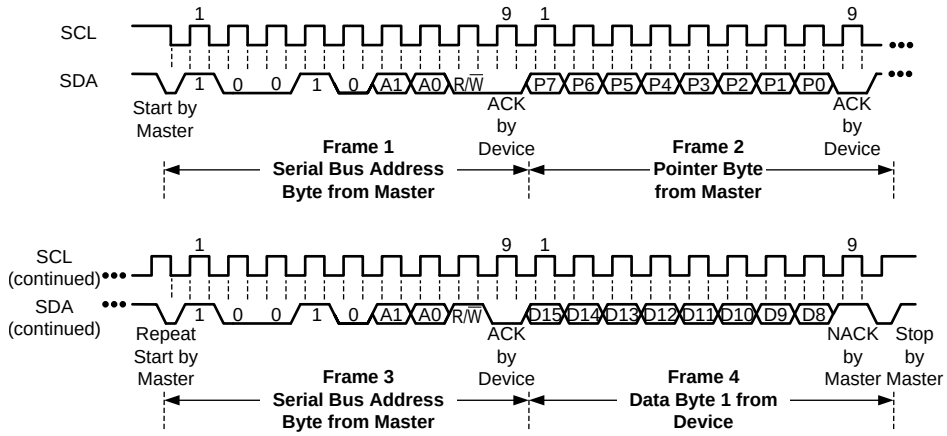

(1) The master must leave SDA high to terminate a single-byte read operation.

Figure 17. Two-Wire Timing Diagram for Pointer Set Followed by a Repeat Start and Single-Byte Read Format

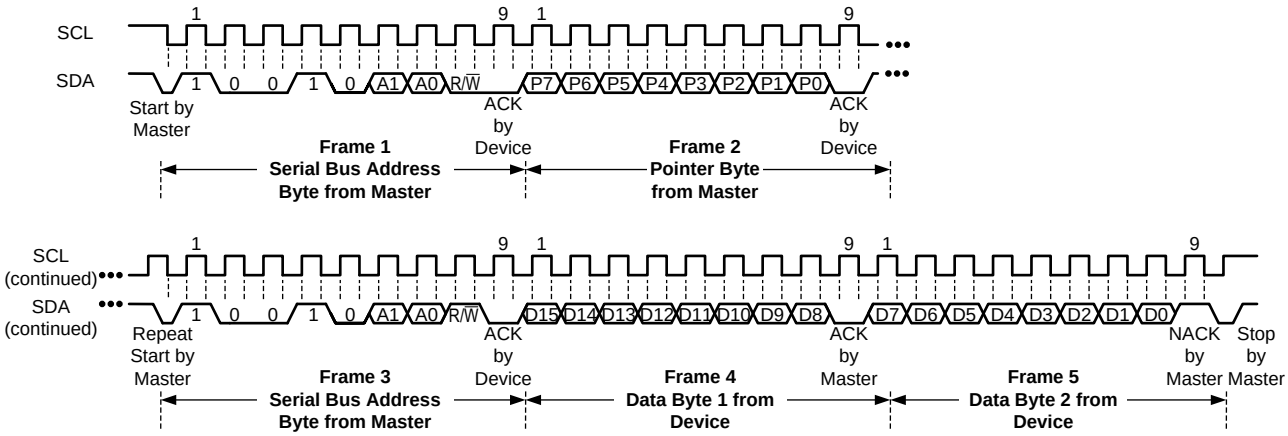

Figure 18. Two-Wire Timing Diagram for Pointer Byte Set Followed by a Repeat Start and Word (Two-Byte) Read

Programming (continued)

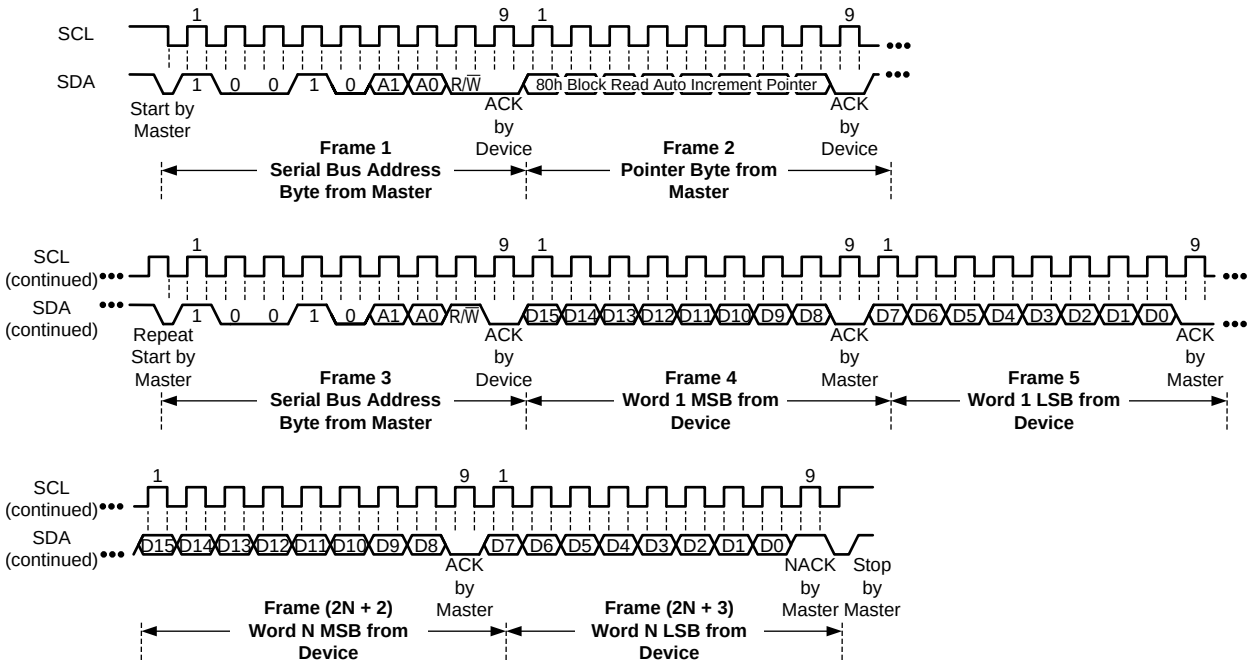

Figure 19. Two-Wire Timing Diagram for Pointer Byte Set Followed by a Repeat Start and Multiple-Word (N-Word) Read

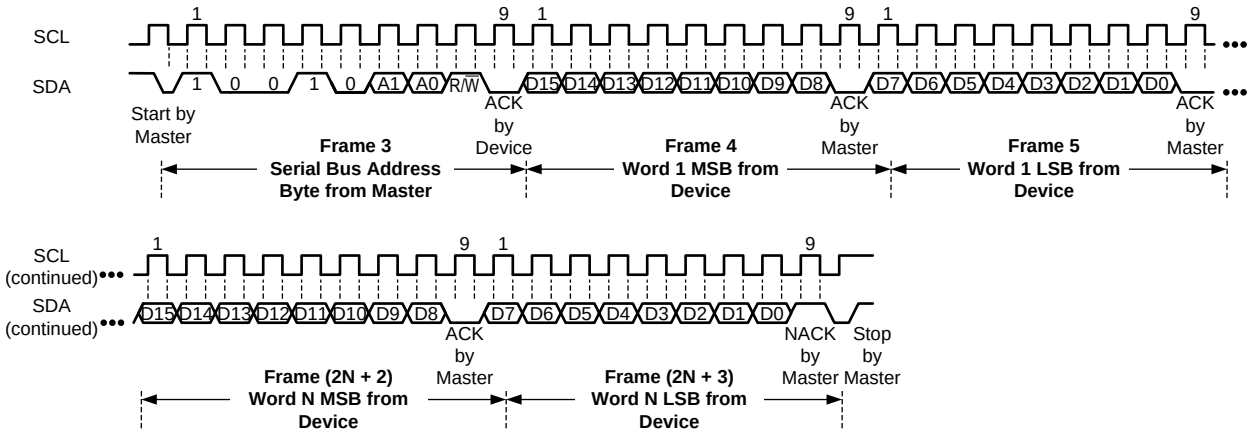

Figure 20. Two-Wire Timing Diagram for Multiple-Word (N-Word) Read Without a Pointer Byte Set

Copyright © 2016–2017, Texas Instruments Incorporated

Programming (continued)

7.5.1.3 Serial Bus Address

To communicate with the TMP468 device, the master must first address slave devices using a slave address byte. The slave address byte consists of seven address bits and a direction bit indicating the intent of executing a read or write operation. The TMP468 device allows up to four devices to be addressed on a single bus. The assigned device address depends on the ADD pin connection as described in Table 2.

Table 2. TMP468 Slave Address Options

ADD PIN CONNECTION	SLAVE ADDRESS	
	BINARY	HEX
GND	1001000	48
V+	1001001	49
SDA	1001010	4A
SCL	1001011	4B

7.5.1.4 Read and Write Operations

Accessing a particular register on the TMP468 device is accomplished by writing the appropriate value to the pointer register. The value for the pointer register is the first byte transferred after the slave address byte with the R/$\overline{W}$ bit low. Every write operation to the TMP468 device requires a value for the pointer register (see Figure 16).

The TMP468 registers can be accessed with block or single register reads. Block reads are only supported for pointer values 80h to 88h. Registers at 80h through 88h mirror the Remote and Local Temperature registers (00h to 08h). Pointer values 00h to 08h are for single register reads.

7.5.1.4.1 Single Register Reads

When reading from the TMP468 device, the last value stored in the pointer register by a write operation is used to determine which register is read by a read operation. To change which register is read for a read operation, a new value must be written to the pointer register. This transaction is accomplished by issuing a slave address byte with the R/$\overline{W}$ bit low, followed by the pointer register byte; no additional data are required. The master can then generate a start condition and send the slave address byte with the R/$\overline{W}$ bit high to initiate the read command; see Figure 17 through Figure 19 for details of this sequence.

If repeated reads from the same register are desired, continually sending the pointer register bytes is not necessary because the TMP468 device retains the pointer register value until the value is changed by the next write operation. The register bytes are sent by the MSB first, followed by the LSB. If only one byte is read (MSB), a consecutive read of TMP468 device results in the MSB being transmitted first. The LSB can only be accessed through two-byte reads.

The master terminates a read operation by issuing a *not-acknowledge* (NACK) command at the end of the last byte to be read or transmitting a stop condition. For a single-byte operation, the master must leave the SDA line high during the acknowledge time of the first byte that is read from the slave.

The TMP468 register structure has a word (two-byte) length, so every write transaction must have an even number of bytes (MSB and LSB) following the pointer register value (see Figure 16). Data transfers occur during the ACK at the end of the second byte or LSB. If the transaction does not finish, signaled by the ACK at the end of the second byte, then the data is ignored and not loaded into the TMP468 register. Read transactions do not have the same restrictions and may be terminated at the end of the last MSB.

7.5.1.4.2 Block Register Reads

The TMP468 supports block mode reads at address 80h through 88h for temperature results alone. Setting the pointer register to 80h signals to the TMP468 device that a block of more than two bytes must be transmitted before a stop is issued. In this mode, the TMP468 device auto increments the internal pointer. After the 18 bytes of temperature data are transmitted, the internal pointer resets to 80h. If the transmission is terminated before register 88h is read, the pointer increments so a consecutive read (without a pointer set) can access the next register.

7.5.1.5 Timeout Function

The TMP468 device resets the serial interface if either SCL or SDA are held low for 17.5 ms (typical) between a start and stop condition. If the TMP468 device is holding the bus low, the device releases the bus and waits for a start condition. To avoid activating the timeout function, maintain a communication speed of at least 1 kHz for the SCL operating frequency.

7.5.1.6 High-Speed Mode

For the two-wire bus to operate at frequencies above 1 MHz, the master device must issue a high-speed mode (HS-mode) master code (0000 1xxx) as the first byte after a start condition to switch the bus to high-speed operation. The TMP468 device does not acknowledge the master code byte, but switches the input filters on SDA and SCL and the output filter on SDA to operate in HS-mode, allowing transfers up to 2.56 MHz. After the HS-mode master code is issued, the master transmits a two-wire slave address to initiate a data transfer operation. The bus continues to operate in HS-mode until a stop condition occurs on the bus. Upon receiving the stop condition, the TMP468 device switches the input and output filters back to fast mode.

7.5.2 TMP468 Register Reset

The TMP468 registers can be software reset by setting bit 15 of the Software Reset register (20h) to 1. This software reset restores the power-on-reset state to all TMP468 registers and aborts any conversion in progress.

7.5.3 Lock Register

All of the configuration and limit registers may be locked for writes (making the registers write-protected), which decreases the chance of software runaway from issuing false changes to these registers. The *Lock* column in Table 3 identifies which registers may be locked. Lock mode does not effect read operations. To activate the lock mode, Lock Register C4h must be set to 0x5CA6. The lock only remains active while the TMP468 device is powered up. Because the TMP468 device does not contain nonvolatile memory, the settings of the configuration and limit registers are lost once a power cycle occurs regardless if the registers are locked or unlocked.

In lock mode, the TMP468 device ignores a write operation to configuration and limit registers except for Lock Register C4h. The TMP468 device does not acknowledge the data bytes during a write operation to a locked register. To unlock the TMP468 registers, write 0xEB19 to register C4h. The TMP468 device powers up in locked mode, so the registers must be unlocked before the registers accept writes of new data.

Copyright © 2016–2017, Texas Instruments Incorporated

7.6 Register Maps

Table 3. TMP468 Register Map

PTR	POR	LOCK	TMP468 FUNCTIONAL REGISTER - BIT DESCRIPTION																REGISTER DESCRIPTION
(HEX)	(HEX)	(Y/N)	15	14	13	12	11	10	9	8	7	6	5	4	3	2	1	0	
00	0000	N/A	LT12	LT11	LT10	LT9	LT8	LT7	LT6	LT5	LT4	LT3	LT2	LT1	LT0	0[1]	0	0	Local Temperature
01	0000	N/A	RT12	RT11	RT10	RT9	RT8	RT7	RT6	RT5	RT4	RT3	RT2	RT1	RT0	0	0	0	Remote Temperature 1
02	0000	N/A	RT12	RT11	RT10	RT9	RT8	RT7	RT6	RT5	RT4	RT3	RT2	RT1	RT0	0	0	0	Remote Temperature 2
03	0000	N/A	RT12	RT11	RT10	RT9	RT8	RT7	RT6	RT5	RT4	RT3	RT2	RT1	RT0	0	0	0	Remote Temperature 3
04	0000	N/A	RT12	RT11	RT10	RT9	RT8	RT7	RT6	RT5	RT4	RT3	RT2	RT1	RT0	0	0	0	Remote Temperature 4
05	0000	N/A	RT12	RT11	RT10	RT9	RT8	RT7	RT6	RT5	RT4	RT3	RT2	RT1	RT0	0	0	0	Remote Temperature 5
06	0000	N/A	RT12	RT11	RT10	RT9	RT8	RT7	RT6	RT5	RT4	RT3	RT2	RT1	RT0	0	0	0	Remote Temperature 6
07	0000	N/A	RT12	RT11	RT10	RT9	RT8	RT7	RT6	RT5	RT4	RT3	RT2	RT1	RT0	0	0	0	Remote Temperature 7
08	0000	N/A	RT12	RT11	RT10	RT9	RT8	RT7	RT6	RT5	RT4	RT3	RT2	RT1	RT0	0	0	0	Remote Temperature 8
20	0000	N/A	RST	0	0	0	0	0	0	0	0	0	0	0	0	0	0	0	Software Reset Register
21	N/A	N/A	R8TH	R7TH	R6TH	R5TH	R4TH	R3TH	R2TH	R1TH	LTH	0	0	0	0	0	0	0	$\overline{\text{THERM}}$ Status
22	N/A	N/A	R8TH2	R7TH2	R6TH2	R5TH2	R4TH2	R3TH2	R2TH2	R1TH2	LTH2	0	0	0	0	0	0	0	$\overline{\text{THERM2}}$ Status
23	N/A	N/A	R8OPN	R7OPN	R6OPN	R5OPN	R4OPN	R3OPN	R2OPN	R1OPN	0	0	0	0	0	0	0	0	Remote Channel OPEN Status
30	0F9C	Y	REN8	REN7	REN6	REN5	REN4	REN3	REN2	REN1	LEN	OS	SD	CR2	CR1	CR0	BUSY	0	Configuration Register (Enables, OneShot, ShutDown, ConvRate, BUSY)
38	0080	Y	0	HYS11	HYS10	HYS9	HYS8	HYS7	HYS6	HYS5	HYS4	0	0	0	0	0	0	0	$\overline{\text{THERM}}$ Hysteresis
39	7FC0	Y	LTH1_12	LTH1_11	LTH1_10	LTH1_09	LTH1_08	LTH1_07	LTH1_06	LTH1_05	LTH1_04	LTH1_03	0	0	0	0	0	0	Local Temperature $\overline{\text{THERM}}$ Limit
3A	7FC0	Y	LTH2_12	LTH2_11	LTH2_10	LTH2_09	LTH2_08	LTH2_07	LTH2_06	LTH2_05	LTH2_04	LTH2_03	0	0	0	0	0	0	Local Temperature $\overline{\text{THERM2}}$ Limit
40	0000	Y	ROS12	ROS12[2]	ROS10	ROS9	ROS8	ROS7	ROS6	ROS5	ROS4	ROS3	ROS2	ROS1	ROS0	0	0	0	Remote Temperature 1 Offset
41	0000	Y	RNC7	RNC6	RNC5	RNC4	RNC3	RNC2	RNC1	RNC0	0	0	0	0	0	0	0	0	Remote Temperature 1 η-Factor Correction
42	7FC0	Y	RTH1_12	RTH1_11	RTH1_10	RTH1_09	RTH1_08	RTH1_07	RTH1_06	RTH1_05	RTH1_04	RTH1_03	0	0	0	0	0	0	Remote Temperature 1 $\overline{\text{THERM}}$ Limit
43	7FC0	Y	RTH2_12	RTH2_11	RTH2_10	RTH2_09	RTH2_08	RTH2_07	RTH2_06	RTH2_05	RTH2_04	RTH2_03	0	0	0	0	0	0	Remote Temperature 1 $\overline{\text{THERM2}}$ Limit
48	0000	Y	ROS12	ROS12	ROS10	ROS9	ROS8	ROS7	ROS6	ROS5	ROS4	ROS3	ROS2	ROS1	ROS0	0	0	0	Remote Temperature 2 Offset
49	0000	Y	RNC7	RNC6	RNC5	RNC4	RNC3	RNC2	RNC1	RNC0	0	0	0	0	0	0	0	0	Remote Temperature 2 η-Factor Correction
4A	7FC0	Y	RTH1_12	RTH1_11	RTH1_10	RTH1_09	RTH1_08	RTH1_07	RTH1_06	RTH1_05	RTH1_04	RTH1_03	0	0	0	0	0	0	Remote Temperature 2 $\overline{\text{THERM}}$ Limit
4B	7FC0	Y	RTH2_12	RTH2_11	RTH2_10	RTH2_09	RTH2_08	RTH2_07	RTH2_06	RTH2_05	RTH2_04	RTH2_03	0	0	0	0	0	0	Remote Temperature 2 $\overline{\text{THERM2}}$ Limit
50	0000	Y	ROS12	ROS12	ROS10	ROS9	ROS8	ROS7	ROS6	ROS5	ROS4	ROS3	ROS2	ROS1	ROS0	0	0	0	Remote Temperature 3 Offset
51	0000	Y	RNC7	RNC6	RNC5	RNC4	RNC3	RNC2	RNC1	RNC0	0	0	0	0	0	0	0	0	Remote Temperature 3 η-Factor Correction
52	7FC0	Y	RTH1_12	RTH1_11	RTH1_10	RTH1_09	RTH1_08	RTH1_07	RTH1_06	RTH1_05	RTH1_04	RTH1_03	0	0	0	0	0	0	Remote Temperature 3 $\overline{\text{THERM}}$ Limit
53	7FC0	Y	RTH2_12	RTH2_11	RTH2_10	RTH2_09	RTH2_08	RTH2_07	RTH2_06	RTH2_05	RTH2_04	RTH2_03	0	0	0	0	0	0	Remote Temperature 3 $\overline{\text{THERM2}}$ limit
58	0000	Y	ROS12	ROS12	ROS10	ROS9	ROS8	ROS7	ROS6	ROS5	ROS4	ROS3	ROS2	ROS1	ROS0	0	0	0	Remote temperature 4 Offset
59	0000	Y	RNC7	RNC6	RNC5	RNC4	RNC3	RNC2	RNC1	RNC0	0	0	0	0	0	0	0	0	Remote Temperature 4 η-Factor Correction

(1) Register bits highlighted in purple are reserved for future use and always report 0; writes to these bits are ignored.
(2) Register bits highlighted in green show sign extended values.

Copyright © 2016–2017, Texas Instruments Incorporated

Register Maps (continued)

Table 3. TMP468 Register Map (continued)

PTR	POR	LOCK	TMP468 FUNCTIONAL REGISTER - BIT DESCRIPTION																REGISTER DESCRIPTION
(HEX)	(HEX)	(Y/N)	15	14	13	12	11	10	9	8	7	6	5	4	3	2	1	0	
5A	7FC0	Y	RTH1_12	RTH1_11	RTH1_10	RTH1_09	RTH1_08	RTH1_07	RTH1_06	RTH1_05	RTH1_04	RTH1_03	0	0	0	0	0	0	Remote Temperature 4 $\overline{\text{THERM}}$ Limit
5B	7FC0	Y	RTH2_12	RTH2_11	RTH2_10	RTH2_09	RTH2_08	RTH2_07	RTH2_06	RTH2_05	RTH2_04	RTH2_03	0	0	0	0	0	0	Remote Temperature 4 $\overline{\text{THERM2}}$ Limit
60	0000	Y	ROS12	ROS12	ROS10	ROS9	ROS8	ROS7	ROS6	ROS5	ROS4	ROS3	ROS2	ROS1	ROS0	0	0	0	Remote Temperature 5 Offset
61	0000	Y	RNC7	RNC6	RNC5	RNC4	RNC3	RNC2	RNC1	RNC0	0	0	0	0	0	0	0	0	Remote Temperature 5 η-Factor Correction
62	7FC0	Y	RTH1_12	RTH1_11	RTH1_10	RTH1_09	RTH1_08	RTH1_07	RTH1_06	RTH1_05	RTH1_04	RTH1_03	0	0	0	0	0	0	Remote Temperature 5 $\overline{\text{THERM}}$ Limit
63	7FC0	Y	RTH2_12	RTH2_11	RTH2_10	RTH2_09	RTH2_08	RTH2_07	RTH2_06	RTH2_05	RTH2_04	RTH2_03	0	0	0	0	0	0	Remote Temperature 5 $\overline{\text{THERM2}}$ Limit
68	0000	Y	ROS12	ROS12	ROS10	ROS9	ROS8	ROS7	ROS6	ROS5	ROS4	ROS3	ROS2	ROS1	ROS0	0	0	0	Remote Temperature 6 Offset
69	0000	Y	RNC7	RNC6	RNC5	RNC4	RNC3	RNC2	RNC1	RNC0	0	0	0	0	0	0	0	0	Remote Temperature 6 η-Factor Correction
6A	7FC0	Y	RTH1_12	RTH1_11	RTH1_10	RTH1_09	RTH1_08	RTH1_07	RTH1_06	RTH1_05	RTH1_04	RTH1_03	0	0	0	0	0	0	Remote Temperature 6 $\overline{\text{THERM}}$ Limit
6B	7FC0	Y	RTH2_12	RTH2_11	RTH2_10	RTH2_09	RTH2_08	RTH2_07	RTH2_06	RTH2_05	RTH2_04	RTH2_03	0	0	0	0	0	0	Remote Temperature 6 $\overline{\text{THERM2}}$ Limit
70	0000	Y	ROS12	ROS12	ROS10	ROS9	ROS8	ROS7	ROS6	ROS5	ROS4	ROS3	ROS2	ROS1	ROS0	0	0	0	Remote Temperature 7 Offset
71	0000	Y	RNC7	RNC6	RNC5	RNC4	RNC3	RNC2	RNC1	RNC0	0	0	0	0	0	0	0	0	Remote Temperature 7 η-Factor Correction
72	7FC0	Y	RTH1_12	RTH1_11	RTH1_10	RTH1_09	RTH1_08	RTH1_07	RTH1_06	RTH1_05	RTH1_04	RTH1_03	0	0	0	0	0	0	Remote Temperature 7 $\overline{\text{THERM}}$ Limit
73	7FC0	Y	RTH2_12	RTH2_11	RTH2_10	RTH2_09	RTH2_08	RTH2_07	RTH2_06	RTH2_05	RTH2_04	RTH2_03	0	0	0	0	0	0	Remote Temperature 7 $\overline{\text{THERM2}}$ Limit
78	0000	Y	ROS12	ROS12	ROS10	ROS9	ROS8	ROS7	ROS6	ROS5	ROS4	ROS3	ROS2	ROS1	ROS0	0	0	0	Remote Temperature 8 Offset
79	0000	Y	RNC7	RNC6	RNC5	RNC4	RNC3	RNC2	RNC1	RNC0	0	0	0	0	0	0	0	0	Remote Temperature 8 η-Factor Correction
7A	7FC0	Y	RTH1_12	RTH1_11	RTH1_10	RTH1_09	RTH1_08	RTH1_07	RTH1_06	RTH1_05	RTH1_04	RTH1_03	0	0	0	0	0	0	Remote Temperature 8 $\overline{\text{THERM}}$ Limit
7B	7FC0	Y	RTH2_12	RTH2_11	RTH2_10	RTH2_09	RTH2_08	RTH2_07	RTH2_06	RTH2_05	RTH2_04	RTH2_03	0	0	0	0	0	0	Remote Temperature 8 $\overline{\text{THERM2}}$ Limit
80	0000	N/A	LT12	LT11	LT10	LT9	LT8	LT7	LT6	LT5	LT4	LT3	LT2	LT1	LT0	0	0	0	Local Temperature (Block Read Range - Auto Increment Pointer Register)
81	0000	N/A	RT12	RT11	RT10	RT9	RT8	RT7	RT6	RT5	RT4	RT3	RT2	RT1	RT0	0	0	0	Remote Temperature 1 (Block Read Range - Auto Increment Pointer Register)
82	0000	N/A	RT12	RT11	RT10	RT9	RT8	RT7	RT6	RT5	RT4	RT3	RT2	RT1	RT0	0	0	0	Remote Temperature 2 (Block Read Range - Auto Increment Pointer Register)
83	0000	N/A	RT12	RT11	RT10	RT9	RT8	RT7	RT6	RT5	RT4	RT3	RT2	RT1	RT0	0	0	0	Remote Temperature 3 (Block Read Range - Auto Increment Pointer Register)
84	0000	N/A	RT12	RT11	RT10	RT9	RT8	RT7	RT6	RT5	RT4	RT3	RT2	RT1	RT0	0	0	0	Remote Temperature 4 (Block Read Range - Auto Increment Pointer Register)
85	0000	N/A	RT12	RT11	RT10	RT9	RT8	RT7	RT6	RT5	RT4	RT3	RT2	RT1	RT0	0	0	0	Remote Temperature 5 (Block Read Range - Auto Increment Pointer Register)
86	0000	N/A	RT12	RT11	RT10	RT9	RT8	RT7	RT6	RT5	RT4	RT3	RT2	RT1	RT0	0	0	0	Remote Temperature 6 (Block Read Range - Auto Increment Pointer Register)

Copyright © 2016–2017, Texas Instruments Incorporated

Register Maps (continued)

Table 3. TMP468 Register Map (continued)

PTR	POR	LOCK	TMP468 FUNCTIONAL REGISTER - BIT DESCRIPTION																REGISTER DESCRIPTION
(HEX)	(HEX)	(Y/N)	15	14	13	12	11	10	9	8	7	6	5	4	3	2	1	0	
87	0000	N/A	RT12	RT11	RT10	RT9	RT8	RT7	RT6	RT5	RT4	RT3	RT2	RT1	RT0	0	0	0	Remote Temperature 7 (Block Read Range - Auto Increment Pointer Register)
88	0000	N/A	RT12	RT11	RT10	RT9	RT8	RT7	RT6	RT5	RT4	RT3	RT2	RT1	RT0	0	0	0	Remote Temperature 8 (Block Read Range - Auto Increment Pointer Register)
C4	8000	N/A	Write 0x5CA6 to lock registers and 0xEB19 to unlock registers Read back: locked 0x8000; unlocked 0x0000																Lock Register. This locks the registers after initialization.
FE	5449	N/A	0	1	0	1	0	1	0	0	0	1	0	0	1	0	0	1	Manufacturers Identification Register
FF	0468	N/A	0	0	0	0	0	1	0	0	0	1	1	0	1	0	0	0	Device Identification/Revision Register

Copyright © 2016–2017, Texas Instruments Incorporated

7.6.1 Register Information

The TMP468 device contains multiple registers for holding configuration information, temperature measurement results, and status information. These registers are described in Figure 21 and Table 3.

7.6.1.1 Pointer Register

shows the internal register structure of the TMP468 device. The 8-bit pointer register addresses a given data register. The pointer register identifies which of the data registers must respond to a read or write command on the two-wire bus. This register is set with every write command. A write command must be issued to set the proper value in the pointer register before executing a read command. Table 3 describes the pointer register and the internal structure of the TMP468 registers. The power-on-reset (POR) value of the pointer register is 00h (0000 0000b). Table 3 lists a summary of the pointer values for the different registers. Writing data to unassigned pointer values are ignored and does not **affect** the operation of the device. Reading an unassigned register returns undefined data and is ACKed.

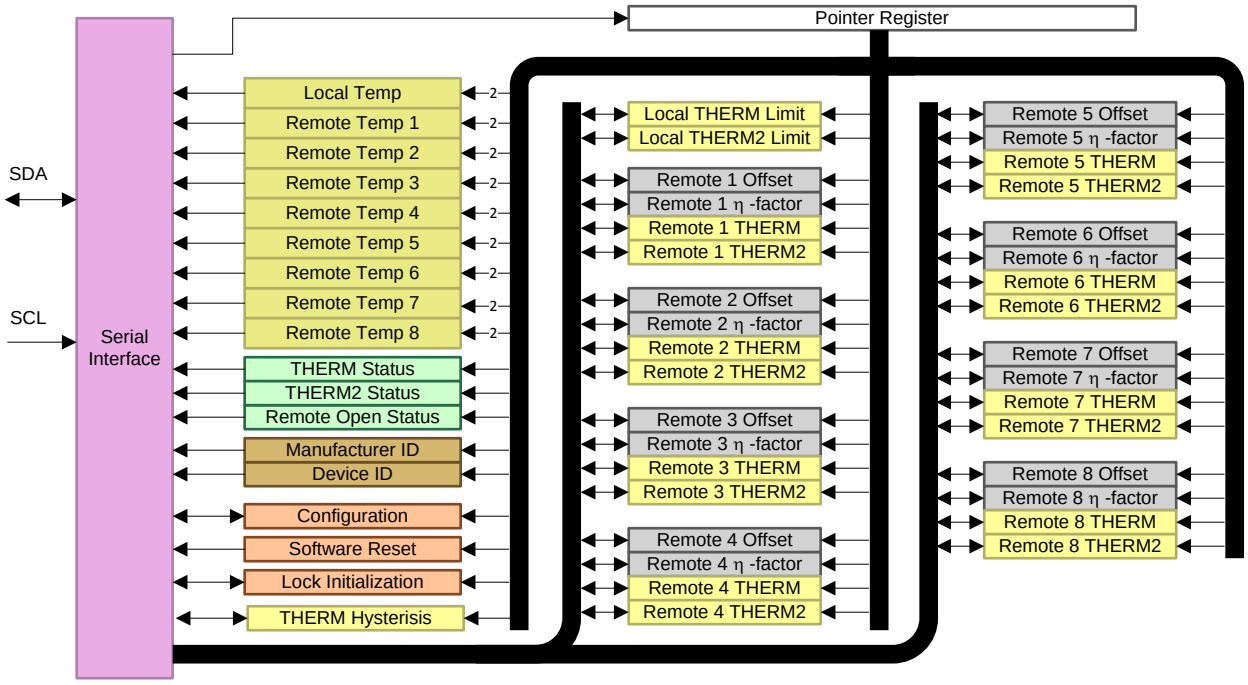

Figure 21. TMP468 Internal Register Structure

7.6.1.2 Local and Remote Temperature Value Registers

The TMP468 device has multiple 16-bit registers that hold 13-bit temperature measurement results. The 13 bits of the local temperature sensor result are stored in register 00h. The 13 bits of the eight remote temperature sensor results are stored in registers 01h through 08h. The four assigned LSBs of both the local (LT3:LT0) and remote (RT3:RT0) sensors indicate the temperature value after the decimal point (for example, if the temperature result is 10.0625°C, then the high byte is 0000 0101 and the low byte is 0000 1000). These registers are read-only and are updated by the ADC each time a temperature measurement is complete. Asynchronous reads are supported, so a read operation can occur at any time and results in valid conversion results being transmitted once the first conversion is complete after power up for the channel being accessed. If after power up a read is initiated before a conversion is complete, the read operation results in all zeros (0x0000).

7.6.1.3 Software Reset Register

The Software Reset Register allows the user to reset the TMP468 registers through software by setting the reset bit (RST, bit 15) to 1. The power-on-reset value for this register is 0x0000. Resets are ignored when the device is in lock mode, so writing a 1 to the RST bit does not reset any registers.

Copyright © 2016–2017, Texas Instruments Incorporated

Table 4. Software Reset Register Format

STATUS REGISTER (READ = 20h, WRITE = 20h, POR = 0x0000)		
BIT NUMBER	**BIT NAME**	**FUNCTION**
15	RST	1 software reset device; writing a value of 0 is ignored
14-0	0	Reserved for future use; always reports 0

7.6.1.4 THERM Status Register

The $\overline{\text{THERM}}$ Status register reports the state of the $\overline{\text{THERM}}$ limit comparators for local and eight remote temperatures. Table 5 lists the status register bits. The $\overline{\text{THERM}}$ Status register is read-only and is read by accessing pointer address 21h.

Table 5. $\overline{\text{THERM}}$ Status Register Format

$\overline{\text{THERM}}$ STATUS REGISTER (READ = 21h, WRITE = N/A)		
BIT NUMBER	**BIT NAME**	**FUNCTION**
15	R8TH	1 when Remote 8 exceeds the $\overline{\text{THERM}}$ limit
14	R7TH	1 when Remote 7 exceeds the $\overline{\text{THERM}}$ limit
13	R6TH	1 when Remote 6 exceeds the $\overline{\text{THERM}}$ limit
12	R5TH	1 when Remote 5 exceeds the $\overline{\text{THERM}}$ limit
11	R4TH	1 when Remote 4 exceeds the $\overline{\text{THERM}}$ limit
10	R3TH	1 when Remote 3 exceeds the $\overline{\text{THERM}}$ limit
9	R2TH	1 when Remote 2 exceeds the $\overline{\text{THERM}}$ limit
8	R1TH	1 when Remote 1 exceeds the $\overline{\text{THERM}}$ limit
7	LTH	1 when Local sensor exceeds the $\overline{\text{THERM}}$ limit
6:0	0	Reserved for future use; always reports 0.

The R8TH:R1TH and LTH flags are set when the corresponding temperature exceeds the respective programmed $\overline{\text{THERM}}$ limit (39h, 42h, 4Ah, 52h, 5Ah, 62h, 6Ah, 72h, 7Ah). These flags are reset automatically when the temperature returns below the $\overline{\text{THERM}}$ limit minus the value set in the $\overline{\text{THERM}}$ Hysteresis register (38h). The $\overline{\text{THERM}}$ output goes low in the case of overtemperature on either the local or remote channels, and goes high as soon as the measurements are less than the $\overline{\text{THERM}}$ limit minus the value set in the $\overline{\text{THERM}}$ Hysteresis register. The $\overline{\text{THERM}}$ Hysteresis register (38h) allows hysteresis to be added so that the flag resets and the output goes high when the temperature returns to or goes below the limit value minus the hysteresis value.

7.6.1.5 THERM2 Status Register

The THERM2 Status register reports the state of the THERM2 limit comparators for local and remote 1-8 temperatures. Table 6 lists the status register bits. The THERM2 Status register is read-only and is read by accessing pointer address 22h.

Table 6. THERM2 Status Register Format

THERM2 STATUS REGISTER (READ = 22h, WRITE = N/A)		
BIT NUMBER	**BIT NAME**	**FUNCTION**
15	R8TH2	1 when Remote 8 exceeds the THERM2 limit
14	R7TH2	1 when Remote 7 exceeds the THERM2 limit
13	R6TH2	1 when Remote 6 exceeds the THERM2 limit
12	R5TH2	1 when Remote 5 exceeds the THERM2 limit
11	R4TH2	1 when Remote 4 exceeds the THERM2 limit
10	R3TH2	1 when Remote 3 exceeds the THERM2 limit
9	R2TH2	1 when Remote 2 exceeds the THERM2 limit
8	R1TH2	1 when Remote 1 exceeds the THERM2 limit
7	LTH2	1 when Local Sensor exceeds the THERM2 limit
6:0	0	Reserved for future use; always reports 0.

The R8TH2:R1TH2 and LTH2 flags are set when the corresponding temperature exceeds the respective programmed THERM2 limit (3Ah, 43h, 4Bh, 53h, 5Bh, 63h, 6Bh, 73h, 7Bh). These flags are reset automatically when the temperature returns below the THERM2 limit minus the value set in the THERM Hysteresis register (38h). The THERM2 output goes low in the case of overtemperature on either the local or remote channels, and goes high as soon as the measurements are less than the THERM2 limit minus the value set in the THERM Hysteresis register. The THERM Hysteresis register (38h) allows hysteresis to be added so that the flag resets and the output goes high when the temperature returns to or goes below the limit value minus the hysteresis value.

7.6.1.6 Remote Channel Open Status Register

The Remote Channel Open Status register reports the state of the connection of remote channels one through eight. Table 7 lists the status register bits. The Remote Channel Open Status register is read-only and is read by accessing pointer address 23h.

Table 7. Remote Channel Open Status Register Format

REMOTE CHANNEL OPEN STATUS REGISTER (READ = 23h, WRITE = N/A)		
BIT NUMBER	**BIT NAME**	**FUNCTION**
15	R8OPEN	1 when Remote 8 channel is an open circuit
14	R7OPEN	1 when Remote 7 channel is an open circuit
13	R6OPEN	1 when Remote 6 channel is an open circuit
12	R5OPEN	1 when Remote 5 channel is an open circuit
11	R4OPEN	1 when Remote 4 channel is an open circuit
10	R3OPEN	1 when Remote 3 channel is an open circuit
9	R2OPEN	1 when Remote 2 channel is an open circuit
8	R1OPEN	1 when Remote 1 channel is an open circuit
7:0	0	Reserved for future use; always reports 0.

The R8OPEN:R1OPEN bits indicate an open-circuit condition on remote sensors eight through one, respectively. The setting of these flags does not directly affect the state of the THERM or THERM2 output pins. Indirectly, the temperature reading(s) may be erroneous and exceed the respective THERM and THERM2 limits, activating the THERM or THERM2 output pins.

Copyright © 2016–2017, Texas Instruments Incorporated

7.6.1.7 Configuration Register

The Configuration Register sets the conversion rate, starts one-shot conversion of all enabled channels, enables conversion the temperature channels, controls the shutdown mode and reports when a conversion is in process. The Configuration Register is set by writing to pointer address 30h, and is read from pointer address 30h. Table 8 summarizes the bits of the Configuration Register.

Table 8. Configuration Register Bit Descriptions

CONFIGURATION REGISTER (READ = 30h, WRITE = 30h, POR = 0x0F9C)			
BIT NUMBER	NAME	FUNCTION	POWER-ON-RESET VALUE
15:8	REN8:REN1	1 = enable respective remote channel 8 through 1 conversions	1111 1111
7	LEN	1 = enable local channel conversion	1
6	OS	1 = start one-shot conversion on enabled channels	0
5	SD	1 = enables device shutdown	0
4:2	CR2:CR0	Conversion rate control bits; control conversion rates for all enabled channels from 16 seconds to continuous conversion	111
1	BUSY	1 when the ADC is converting (read-only bit ignores writes)	0
0	Reserved	—	0

The Remote Enable eight through one (REN8:REN1, bits 15:8) bits enable conversions on the respective remote channels. The Local Enable (LEN, bit 7) bit enables conversions of the local temperature channel. If all LEN and REN are set to 1 (default), this enables the ADC to convert the local and all remote temperatures. If the LEN is set to 0, the local temperature conversion is skipped. Similarly if a REN is set to 0, that remote temperature conversion channel is skipped. The TMP468 device steps through each enabled channel in a round-robin fashion in the following order: LOC, REM1, REM2, REM8, LOC, REM1, and so on. All local and remote temperatures are converted by the internal ADC by default after power up. The configuration register LEN and REN bits can be configured to save power by reducing the total ADC conversion time for applications that do not require all of the eight remote and local temperature information. Note writing all zeros to REN8:REN1 and LEN has the same effect as SD = 1 and OS = 0.

The shutdown bit (SD, bit 5) enables or disables the temperature-measurement circuitry. If SD = 0 (default), the TMP468 device converts continuously at the rate set in the conversion rate register. When SD is set to 1, the TMP468 device immediately stops the conversion in progress and instantly enters shutdown mode. When SD is set to 0 again, the TMP468 device resumes continuous conversions starting with the local temperature.

The BUSY bit = 1 if the ADC is making a conversion. This bit is set to 0 if the ADC is not converting.

After the TMP468 device is in shutdown mode, writing a 1 to the one-shot (OS, bit 6) bit starts a single ADC conversion of all the enabled temperature channels. This write operation starts one conversion and comparison cycle on either the eight remote and one local sensor or any combination of sensors, depending on the LEN and REN values in the Configuration Register (read address 30h). The TMP468 device returns to shutdown mode when the cycle is complete. Table 9 details the interaction of the SD, OS, LEN, and REN bits.

Table 9. Conversion Modes

WRITE			READ			FUNCTION
REN[8:1], LEN	OS	SD	REN[8:1], LEN	OS	SD	
All 0	—	—	All 0	0	1	Shutdown
At least 1 enabled	—	0	Written value	0	0	Continuous conversion
At least 1 enabled	0	1	Written value	0	1	Shutdown
At least 1 enabled	1	1	Written value	1	1	One-shot conversion

The conversion rate bits control the rate that the conversions occur (CR2:CR0, bits 4:2). The value of CR2:CR0 bits controls the idle time between conversions but not the conversion time itself, which allows the TMP468 device power dissipation to be balanced with the update rate of the temperature register. Table 10 describes the mapping for CR2:CR0 to the conversion rate or temperature register update rate.

Table 10. Conversion Rate

CR2:CR0	DECIMAL VALUE	FREQUENCY (Hz)	TIME (s)
000	0	0.0625	16
001	1	0.125	8
010	2	0.25	4
011	3	0.5	2
100	4	1	1
101	5	2	0.5
110	6	4	0.25
111	7	Continuous conversion; depends on number of enabled channels; see Table 11 (default).	

Table 11. Continuous Conversion Times

NUMBER OF REMOTE CHANNELS ENABLED	CONVERSION TIME (ms)	
	LOCAL DISABLED	LOCAL ENABLED
0	0	15.5
1	15.8	31.3
2	31.6	47.1
3	47.4	62.9
4	63.2	78.7
5	79	94.5
6	94.8	110.3
7	110.6	126.1
8	126.4	141.9

The remaining bits of the configuration register are reserved and must always be set to 0. The POR value for this register is 0x0F9C.

7.6.1.8 η-Factor Correction Register

The TMP468 device allows for a different η-factor value to be used for converting remote channel measurements to temperature for each temperature channel. There are eight η-Factor Correction registers assigned: one to each of the remote input channels (addresses 41h, 49h, 51h, 59h, 61h, 69h, 71h and 79h). Each remote channel uses sequential current excitation to extract a differential V_{BE} voltage measurement to determine the temperature of the remote transistor. Equation 1 shows this voltage and temperature.

$$V_{BE2} - V_{BE1} = \frac{\eta kT}{q} \ln\left(\frac{I_2}{I_1}\right) \tag{1}$$

The value η in Equation 1 is a characteristic of the particular transistor used for the remote channel. The POR value for the TMP468 device is η = 1.008. The value in the η-Factor Correction register can be used to adjust the effective η-factor, according to Equation 2 and Equation 3.

$$\eta_{eff} = \left(\frac{1.008 \times 2088}{2088 + N_{ADJUST}}\right) \tag{2}$$

$$N_{ADJUST} = \left(\frac{1.008 \times 2088}{\eta_{eff}}\right) - 2088 \tag{3}$$

Copyright © 2016–2017, Texas Instruments Incorporated

The η-factor correction value must be stored in a two's-complement format, which yields an effective data range from –128 to +127. The POR value for each register is 0000h, which does not affect register values unless a different value is written to the register. The resolution of the η-factor register changes linearly as the code changes and has a range from 0.0004292 to 0.0005476, with an average of 0.0004848.

Table 12. η-Factor Range

N_{ADJUST} ONLY BITS 15 TO 8 IN THE REGISTER ARE SHOWN			η
BINARY	HEX	DECIMAL	
0111 1111	7F	127	0.950205
0000 1010	0A	10	1.003195
0000 1000	08	8	1.004153
0000 0110	06	6	1.005112
0000 0100	04	4	1.006073
0000 0010	02	2	1.007035
0000 0001	01	1	1.007517
0000 0000	00	0	1.008
1111 1111	FF	–1	1.008483
1111 1110	FE	–2	1.008966
1111 1100	FC	–4	1.009935
1111 1010	FA	–6	1.010905
1111 1000	F8	–8	1.011877
1111 0110	F6	–10	1.012851
1000 0000	80	–128	1.073829

7.6.1.9 Remote Temperature Offset Register

The offset registers allow the TMP468 device to store any system offset compensation value that may result from precision calibration. The value in these registers is added to the remote temperature results upon every conversion. Each of the eight temperature channels have an independent assigned offset register (addresses 40h, 48h, 50h, 58h, 60h, 68h, 70h, and 78h). Combined with the independent η-factor corrections, this function allows for very accurate system calibration over the entire temperature range for each remote channel. The format of these registers is the same as the temperature value registers with a range from +127.9375 to –128. Take care to program this register with sign extension, as values above +127.9375 and below –128 are not supported.

7.6.1.10 $\overline{\text{THERM}}$ Hysteresis Register

The $\overline{\text{THERM}}$ Hysteresis register (address 38h) sets the value of the hysteresis used by the temperature comparison logic. All temperature reading comparisons have a common hysteresis. Hysteresis prevents oscillations from occurring on the $\overline{\text{THERM}}$ and $\overline{\text{THERM2}}$ outputs as the measured temperature approaches the comparator threshold (see the *$\overline{\text{THERM}}$ Functions* section). The resolution of the $\overline{\text{THERM}}$ Hysteresis register is 1°C and ranges from 0°C to 255°C.

7.6.1.11 Local and Remote $\overline{\text{THERM}}$ and $\overline{\text{THERM2}}$ Limit Registers

Each of the eight remote and the local temperature channels has associated independent $\overline{\text{THERM}}$ and $\overline{\text{THERM2}}$ Limit registers. There are nine $\overline{\text{THERM}}$ registers (addresses 39h, 42h, 4Ah, 52h, 5Ah, 62h, 6Ah, 72h, and 7Ah) and nine $\overline{\text{THERM2}}$ registers (addresses 39h, 43h, 4Bh, 53h, 5Bh, 63h, 6Bh, 73h, and 7Bh), 18 registers in total. The resolution of these registers is 0.5°C and ranges from +255.5°C to –255°C. See the $\overline{\text{THERM}}$ Functions section for more information.

Setting a $\overline{\text{THERM}}$ limit to 255.5°C disables the $\overline{\text{THERM}}$ limit comparison for that particular channel and disables the limit flag from being set in the $\overline{\text{THERM}}$ Status register. This prevents the associated channel from activating the $\overline{\text{THERM}}$ output. $\overline{\text{THERM2}}$ limits, status, and outputs function similarly.

7.6.1.12 Block Read - Auto Increment Pointer

Block reads can be initiated by setting the pointer register to 80h to 87h. The temperature results are mirrored at pointer addresses 80h to 88h; temperature results for all the channels can be read with one read transaction. Setting the pointer register to any address from 80h to 88h signals to the TMP468 device that a block of more than two bytes must be transmitted before a design stop is issued. In block read mode, the TMP468 device auto increments the pointer address. After 88h, the pointer resets to 80h. The master must NACK the last byte read so the TMP468 device can discontinue driving the bus, which allows the master to initiate a stop. In this mode, the pointer continuously loops in the address range from 80h to 88h, so the register may be easily read multiple times. Block read does not disrupt the conversion process.

7.6.1.13 Lock Register

Register C4h allows the device configuration and limit registers to lock, as shown by the *Lock* column in Table 3. To lock the registers, write 0x5CA6. To unlock the registers, write 0xEB19. When the lock function is enabled, reading the register yields 0x8000; when unlocked, 0x0000 is transmitted.

7.6.1.14 Manufacturer and Device Identification Plus Revision Registers

The TMP468 device allows the two-wire bus controller to query the device for manufacturer and device identifications (IDs) to enable software identification of the device at the particular two-wire bus address. The manufacturer ID is obtained by reading from pointer address FEh; the device ID is obtained from register FFh. Note that the most significant byte of the Device ID register identifies the TMP468 device revision level. The TMP468 device reads 0x5449 for the manufacturer code and 0x0468 for the device ID code for the first release.

Copyright © 2016–2017, Texas Instruments Incorporated

8 Application and Implementation

NOTE

Information in the following applications sections is not part of the TI component specification, and TI does not warrant its accuracy or completeness. TI's customers are responsible for determining suitability of components for their purposes. Customers should validate and test their design implementation to confirm system functionality.

8.1 Application Information

The TMP468 device requires a transistor connected between the D+ and D– pins for remote temperature measurement. Tie the D+ pin to D– if the remote channel is not used and only the local temperature is measured. The SDA, ALERT, and $\overline{\text{THERM}}$ pins (and SCL, if driven by an open-drain output) require pullup resistors as part of the communication bus. TI recommends a 0.1-µF power-supply decoupling capacitor for local bypassing. Figure 22 and Figure 23 illustrate the typical configurations for the TMP468 device.

8.2 Typical Application

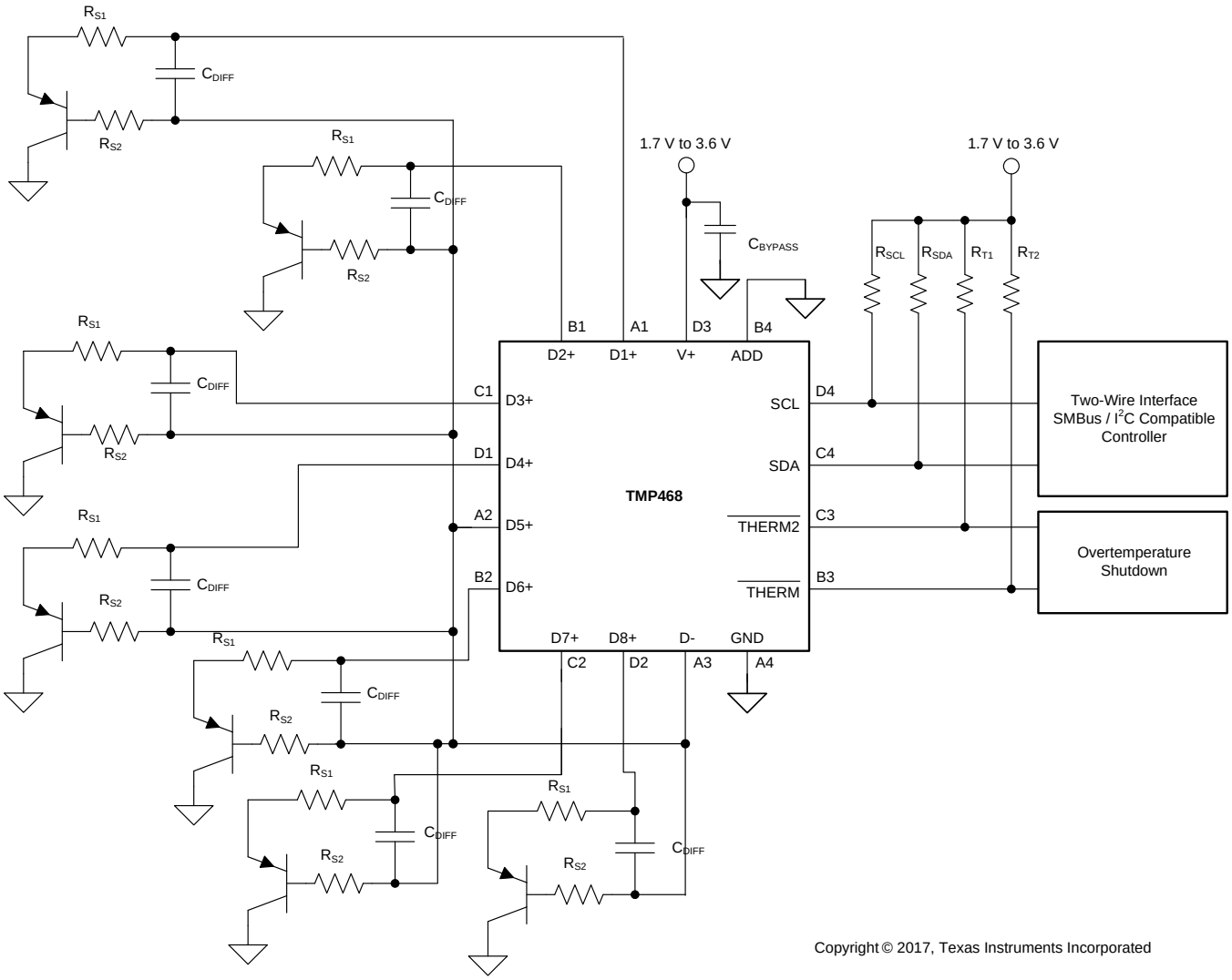

(1) The diode-connected configuration provides better settling time. The transistor-connected configuration provides better series resistance cancellation. TI recommends a MMBT3904 or MMBT3906 transistor with an η-factor of 1.008.

(2) R_S (optional) is < 1 kΩ in most applications. R_S is the combined series resistance connected externally to the D+, D– pins. R_S selection depends on the application.

(3) C_{DIFF} (optional) is < 1000 pF in most applications. C_{DIFF} selection depends on the application; see Figure 9.

(4) Unused diode channels must be tied to D– .as shown for D5+.

Figure 22. TMP468 Basic Connections Using a Discrete Remote Transistor

Copyright © 2016–2017, Texas Instruments Incorporated

Typical Application (continued)

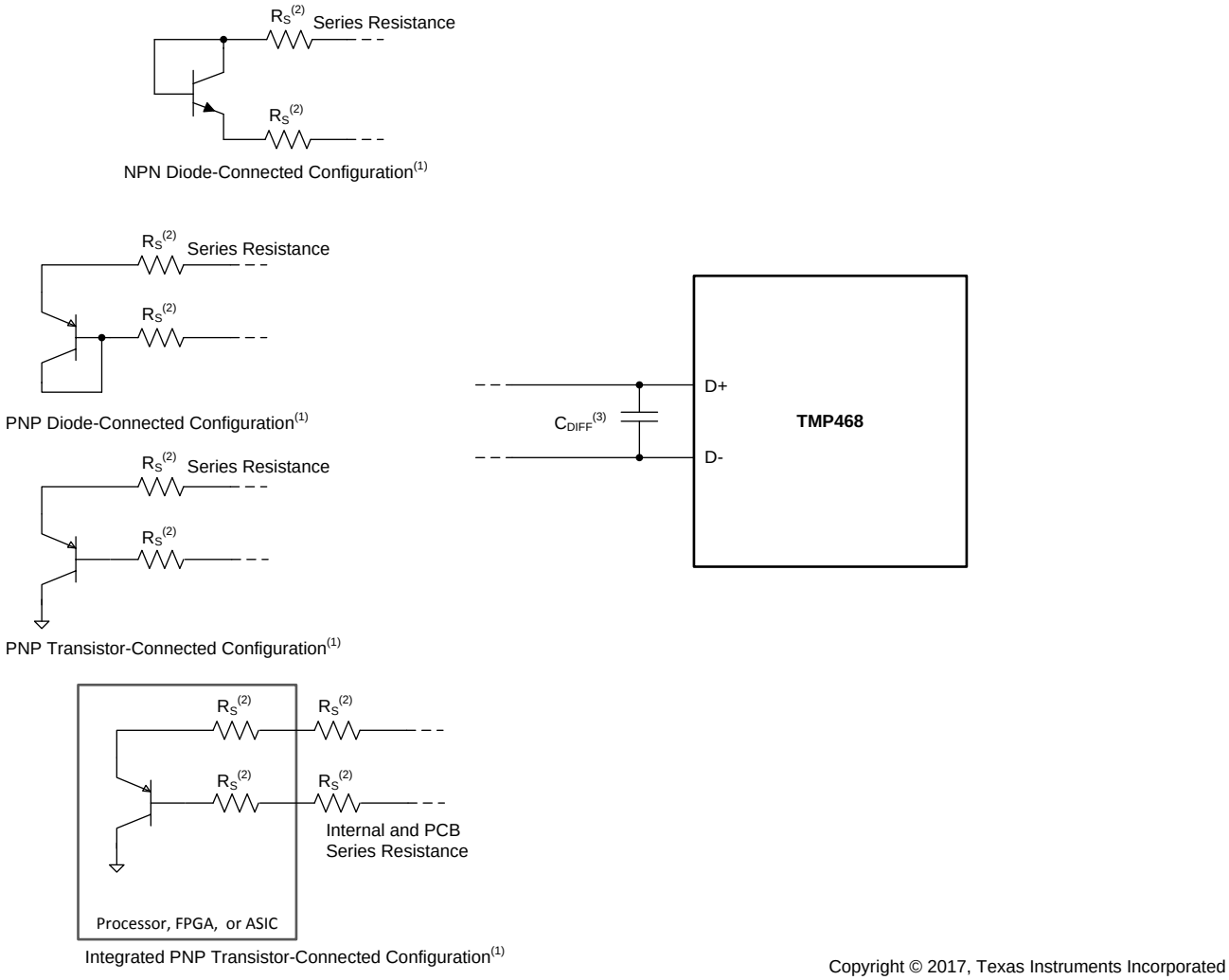

Copyright © 2017, Texas Instruments Incorporated

Figure 23. TMP468 Remote Transistor Configuration Options

8.2.1 Design Requirements

The TMP468 device is designed to be used with either discrete transistors or substrate transistors built into processor chips, field programmable gate arrays (FPGAs), and application-specific integrated circuits (ASICs) ; see Figure 23. Either NPN or PNP transistors can be used, as long as the base-emitter junction is used as the remote temperature sensor. NPN transistors must be diode-connected. PNP transistors can either be transistor- or diode-connected (see Figure 23).

Errors in remote temperature sensor readings are typically the consequence of the ideality factor (η-factor) and current excitation used by the TMP468 device versus the manufacturer-specified operating current for a given transistor. Some manufacturers specify a high-level and low-level current for the temperature-sensing substrate transistors. The TMP468 uses 7.5 µA (typical) for I_{LOW} and 120 µA (typical) for I_{HIGH}.

The ideality factor (η-factor) is a measured characteristic of a remote temperature sensor diode as compared to an ideal diode. The TMP468 allows for different η-factor values; see the *η-Factor Correction Register* section.

The η-factor for the TMP468 device is trimmed to 1.008. For transistors that have an ideality factor that does not match the TMP468 device, Equation 4 can be used to calculate the temperature error.

Typical Application (continued)

NOTE

For Equation 4 to be used correctly, the actual temperature (°C) must be converted to Kelvin (K).

$$T_{ERR} = \left(\frac{\eta - 1.008}{1.008}\right) \times \left(273.15 + T(^{\circ}C)\right)$$

where

- T_{ERR} = error in the TMP468 device because $\eta \neq 1.008$
- η = ideality factor of the remote temperature sensor
- T(°C) = actual temperature, and (4)

In Equation 4, the degree of delta is the same for °C and K.

For η = 1.004 and T(°C) = 100°C:

$$T_{ERR} = \left(\frac{1.004 - 1.008}{1.008}\right) \times \left(273.15 + 100^{\circ}C\right)$$

$$T_{ERR} = -1.48^{\circ}C \quad (5)$$

If a discrete transistor is used as the remote temperature sensor with the TMP468 device, then select the transistor according to the following criteria for best accuracy:

- Base-emitter voltage is > 0.25 V at 7.5 μA, at the highest-sensed temperature.
- Base-emitter voltage is < 0.95 V at 120 μA, at the lowest-sensed temperature.
- Base resistance is < 100 Ω.
- Tight control of V_{BE} characteristics indicated by small variations in h_{FE} (50 to 150).

Based on these criteria, TI recommends using a MMBT3904 (NPN) or a MMBT3906 (PNP) transistor.

8.2.2 Detailed Design Procedure

The local temperature sensor inside the TMP468 is influenced by the ambient air around the device but mainly monitors the PCB temperature that it is mounted to. The thermal time constant for the TMP468 device is approximately two seconds. This constant implies that if the ambient air changes quickly by 100°C, then the TMP468 device takes approximately 10 seconds (that is, five thermal time constants) to settle to within 1°C of the final value. In most applications, the TMP468 package is in electrical (and therefore thermal) contact with the printed-circuit board (PCB), and subjected to forced airflow. The accuracy of the measured temperature directly depends on how accurately the PCB and forced airflow temperatures represent the temperature that the TMP468 device is measuring. Additionally, the internal power dissipation of the TMP468 device can cause the temperature to rise above the ambient or PCB temperature. The internal power is negligible because of the small current drawn by the TMP468 device. Equation 6 can be used to calculate the average conversion current for power dissipation and self-heating based on the number of conversions per second and temperature sensor channel enabled. Equation 7 shows an example with local and all remote sensor channels enabled and conversion rate of 1 conversion per second; see the *Electrical Characteristics* table for typical values required for these calculations. For a 3.3-V supply and a conversion rate of 1 conversion per second, the TMP468 device dissipates 0.224 mW (PD_{IQ} = 3.3 V × 68 μA) when both the remote and local channels are enabled.

Average Conversion Current = (Local Conversion Time) × (Conversions Per Second) × (Local Active IQ) + (Remote Conversion Time) × (Conversions Per Second) × (Remote Active I_Q) × (Number of Active Channels + (Standby Mode) × [1 – ((Local Conversion Time) + (Remote Conversion Time) × (Number of Active Channels)) × (Conversions Per Second)]

(6)

Copyright © 2016–2017, Texas Instruments Incorporated

Typical Application (continued)

$$\text{Average Conversion Current} = (16\ \text{ms}) \times \left(\frac{1}{\text{sec}}\right) \times (240\ \mu\text{A}) + (16\ \text{ms}) \times \left(\frac{1}{\text{sec}}\right) \times (400\ \mu\text{A}) \times (8) + (15\ \mu\text{A}) \times \left[1 - ((16\ \text{ms}) + (16\ \text{ms}) \times (8)) \times \left(\frac{1}{\text{sec}}\right)\right] = 68\ \mu\text{A} \quad (7)\ (8)$$

The temperature measurement accuracy of the TMP468 device depends on the remote and local temperature sensor being at the same temperature as the monitored system point. If the temperature sensor is not in good thermal contact with the part of the monitored system, then there is a delay between the sensor response and the system changing temperature. This delay is usually not a concern for remote temperature-sensing applications that use a substrate transistor (or a small, SOT-23 transistor) placed close to the monitored device.

8.2.3 Application Curve

Figure 24 and Figure 25 show the typical step response to submerging a TMP468 device (initially at 25°C) in an oil bath with a temperature of 100°C and logging the local temperature readings.

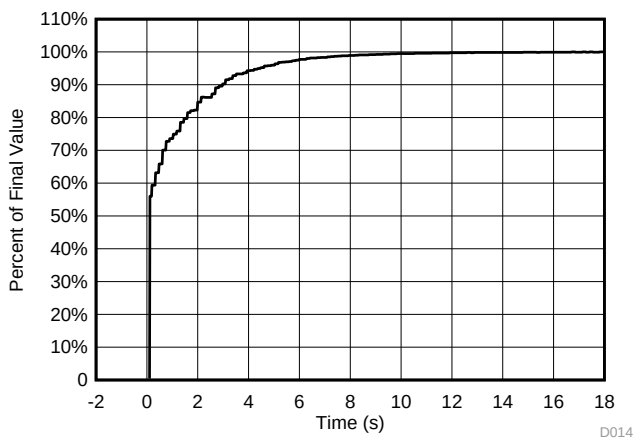

Figure 24. TMP468DSBGA Temperature Step Response of Local Sensor

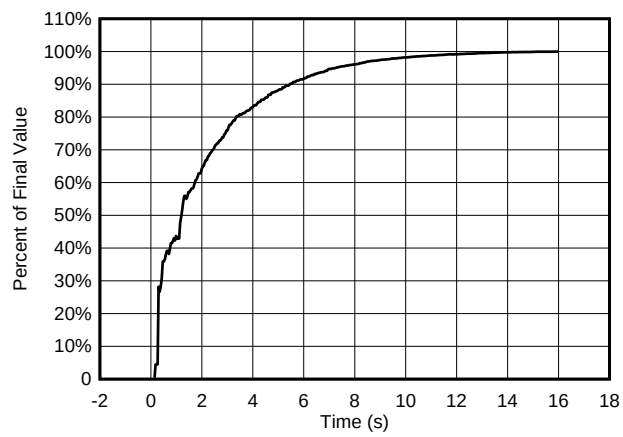

Figure 25. TMP468VQFN Temperature Step Response of Local Sensor

9 Power Supply Recommendations

The TMP468 device operates with a power-supply range from 1.7 V to 3.6 V. The device is optimized for operation at a 1.8-V supply, but can measure temperature accurately in the full supply range.

TI recommends a power-supply bypass capacitor. Place this capacitor as close as possible to the supply and ground pins of the device. A typical value for this supply bypass capacitor is 0.1 μF. Applications with noisy or high-impedance power supplies may require additional decoupling capacitors to reject power-supply noise.

10 Layout

10.1 Layout Guidelines

Remote temperature sensing on the TMP468 device measures very small voltages using very low currents; therefore, noise at the device inputs must be minimized. Most applications using the TMP468 device have high digital content, with several clocks and a multitude of logic-level transitions that create a noisy environment. Layout must adhere to the following guidelines:

1. Place the TMP468 device as close to the remote junction sensor as possible.
2. Route the D+ and D– traces next to each other and shield them from adjacent signals through the use of ground guard traces, as shown in Figure 26. If a multilayer PCB is used, bury these traces between the ground or V+ planes to shield them from extrinsic noise sources. TI recommends 5-mil (0.127 mm) PCB traces.
3. Minimize additional thermocouple junctions caused by copper-to-solder connections. If these junctions are used, make the same number and approximate locations of copper-to-solder connections in both the D+ and D– connections to cancel any thermocouple effects.
4. Use a 0.1-µF local bypass capacitor directly between the V+ and GND of the TMP468. For optimum measurement performance, minimize filter capacitance between D+ and D– to 1000 pF or less. This capacitance includes any cable capacitance between the remote temperature sensor and the TMP468.
5. If the connection between the remote temperature sensor and the TMP468 is wired and is less than eight inches (20.32 cm) long, use a twisted-wire pair connection. For lengths greater than eight inches, use a twisted, shielded pair with the shield grounded as close to the TMP468 device as possible. Leave the remote sensor connection end of the shield wire open to avoid ground loops and 60-Hz pickup.
6. Thoroughly clean and remove all flux residue in and around the pins of the TMP468 device to avoid temperature offset readings as a result of leakage paths between D+ and GND, or between D+ and V+.

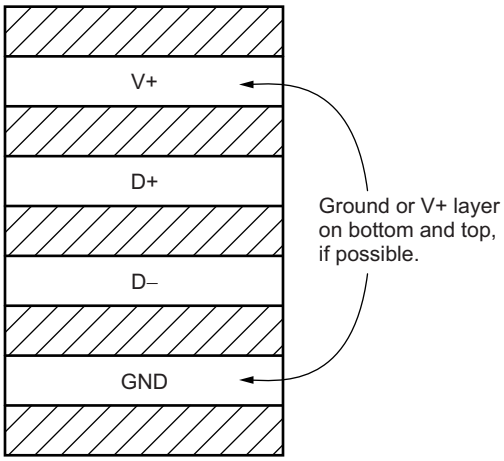

NOTE: Use a minimum of 5-mil (0.127 mm) traces with 5-mil spacing.

Figure 26. Suggested PCB Layer Cross-Section

Copyright © 2016–2017, Texas Instruments Incorporated

10.2 Layout Example

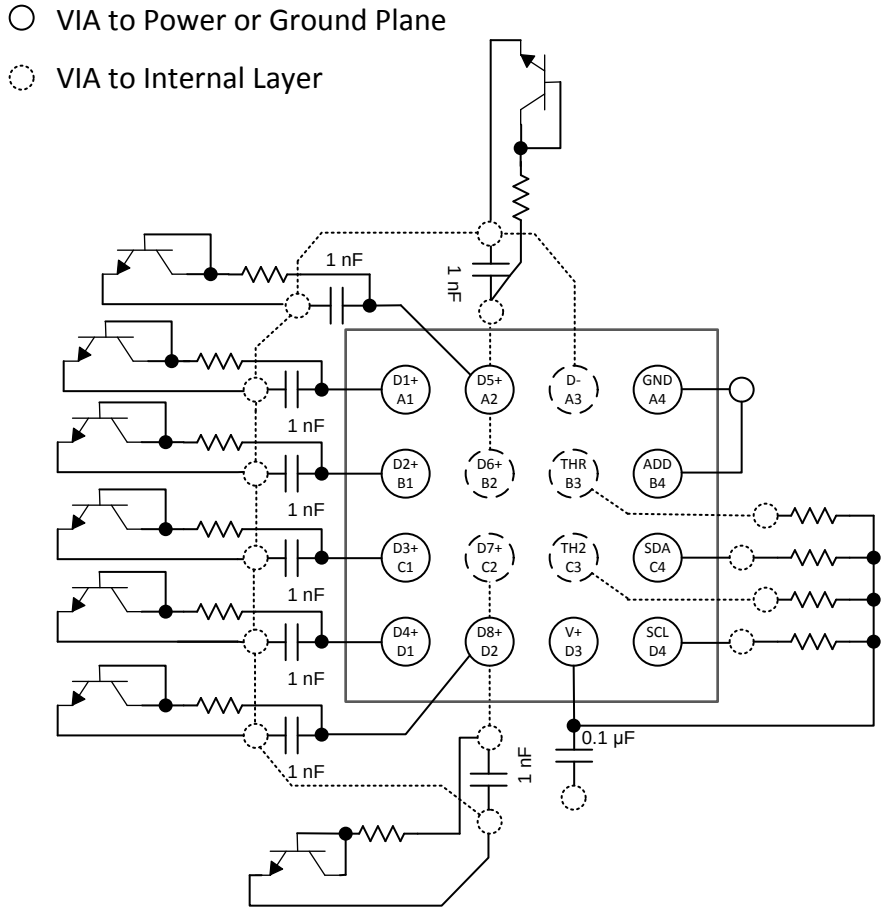

Figure 27. TMP468 YFF Package Layout Example

Layout Example (continued)

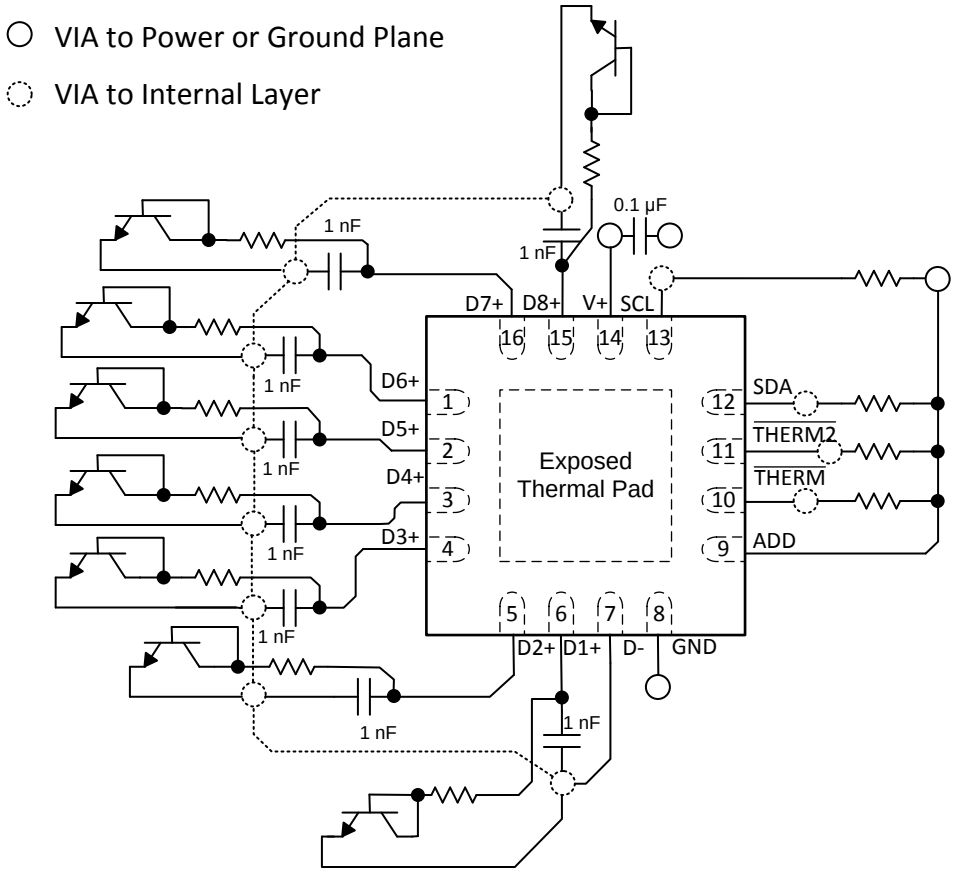

Figure 28. TMP468 RGT Package Layout Example

Copyright © 2016–2017, Texas Instruments Incorporated

11 Device and Documentation Support

11.1 Receiving Notification of Documentation Updates

To receive notification of documentation updates, navigate to the device product folder on ti.com. In the upper right corner, click on *Alert me* to register and receive a weekly digest of any product information that has changed. For change details, review the revision history included in any revised document.

11.2 Community Resources

The following links connect to TI community resources. Linked contents are provided "AS IS" by the respective contributors. They do not constitute TI specifications and do not necessarily reflect TI's views; see TI's Terms of Use.

TI E2E™ Online Community ***TI's Engineer-to-Engineer (E2E) Community.*** Created to foster collaboration among engineers. At e2e.ti.com, you can ask questions, share knowledge, explore ideas and help solve problems with fellow engineers.

Design Support ***TI's Design Support*** Quickly find helpful E2E forums along with design support tools and contact information for technical support.

11.3 Trademarks

E2E is a trademark of Texas Instruments.
SMBus is a trademark of Intel Corporation.
All other trademarks are the property of their respective owners.

11.4 Electrostatic Discharge Caution

These devices have limited built-in ESD protection. The leads should be shorted together or the device placed in conductive foam during storage or handling to prevent electrostatic damage to the MOS gates.

11.5 Glossary

SLYZ022 — *TI Glossary*.

This glossary lists and explains terms, acronyms, and definitions.

12 Mechanical, Packaging, and Orderable Information

The following pages include mechanical, packaging, and orderable information. This information is the most current data available for the designated devices. This data is subject to change without notice and revision of this document. For browser-based versions of this data sheet, refer to the left-hand navigation.

PACKAGING INFORMATION

Orderable part number	Status (1)	Material type (2)	Package | Pins	Package qty | Carrier	RoHS (3)	Lead finish/ Ball material (4)	MSL rating/ Peak reflow (5)	Op temp (°C)	Part marking (6)
TMP468AIRGTR	Active	Production	VQFN (RGT) | 16	3000 | LARGE T&R	Yes	NIPDAU	Level-1-260C-UNLIM	-40 to 125	T468
TMP468AIRGTR.A	Active	Production	VQFN (RGT) | 16	3000 | LARGE T&R	Yes	NIPDAU	Level-1-260C-UNLIM	-40 to 125	T468
TMP468AIRGTRG4	Active	Production	VQFN (RGT) | 16	3000 | LARGE T&R	Yes	NIPDAU	Level-1-260C-UNLIM	-40 to 125	T468
TMP468AIRGTRG4.A	Active	Production	VQFN (RGT) | 16	3000 | LARGE T&R	Yes	NIPDAU	Level-1-260C-UNLIM	-40 to 125	T468
TMP468AIYFFR	Active	Production	DSBGA (YFF) | 16	3000 | LARGE T&R	Yes	SNAGCU	Level-1-260C-UNLIM	-40 to 125	TMP468
TMP468AIYFFR.A	Active	Production	DSBGA (YFF) | 16	3000 | LARGE T&R	Yes	SNAGCU	Level-1-260C-UNLIM	-40 to 125	TMP468
TMP468AIYFFT	Obsolete	Production	DSBGA (YFF) | 16	-	-	Call TI	Call TI	-40 to 125	TMP468

(1) **Status:** For more details on status, see our product life cycle.

(2) **Material type:** When designated, preproduction parts are prototypes/experimental devices, and are not yet approved or released for full production. Testing and final process, including without limitation quality assurance, reliability performance testing, and/or process qualification, may not yet be complete, and this item is subject to further changes or possible discontinuation. If available for ordering, purchases will be subject to an additional waiver at checkout, and are intended for early internal evaluation purposes only. These items are sold without warranties of any kind.

(3) **RoHS values:** Yes, No, RoHS Exempt. See the TI RoHS Statement for additional information and value definition.

(4) **Lead finish/Ball material:** Parts may have multiple material finish options. Finish options are separated by a vertical ruled line. Lead finish/Ball material values may wrap to two lines if the finish value exceeds the maximum column width.

(5) **MSL rating/Peak reflow:** The moisture sensitivity level ratings and peak solder (reflow) temperatures. In the event that a part has multiple moisture sensitivity ratings, only the lowest level per JEDEC standards is shown. Refer to the shipping label for the actual reflow temperature that will be used to mount the part to the printed circuit board.

(6) **Part marking:** There may be an additional marking, which relates to the logo, the lot trace code information, or the environmental category of the part.

Multiple part markings will be inside parentheses. Only one part marking contained in parentheses and separated by a "~" will appear on a part. If a line is indented then it is a continuation of the previous line and the two combined represent the entire part marking for that device.

Important Information and Disclaimer: The information provided on this page represents TI's knowledge and belief as of the date that it is provided. TI bases its knowledge and belief on information provided by third parties, and makes no representation or warranty as to the accuracy of such information. Efforts are underway to better integrate information from third parties. TI has taken and continues to take reasonable steps to provide representative and accurate information but may not have conducted destructive testing or chemical analysis on incoming materials and chemicals. TI and TI suppliers consider certain information to be proprietary, and thus CAS numbers and other limited information may not be available for release.

In no event shall TI's liability arising out of such information exceed the total purchase price of the TI part(s) at issue in this document sold by TI to Customer on an annual basis.

TAPE AND REEL INFORMATION

REEL DIMENSIONS

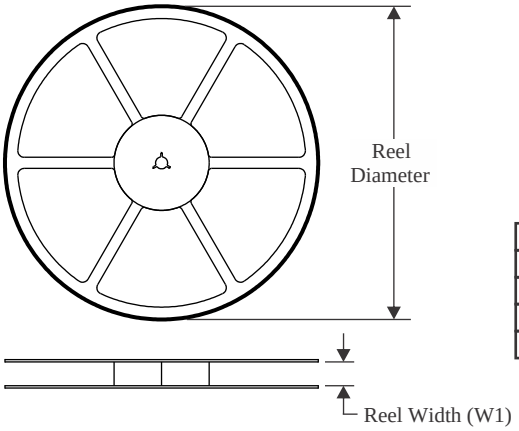

TAPE DIMENSIONS

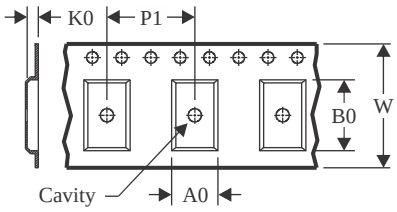

A0	Dimension designed to accommodate the component width
B0	Dimension designed to accommodate the component length
K0	Dimension designed to accommodate the component thickness
W	Overall width of the carrier tape
P1	Pitch between successive cavity centers

QUADRANT ASSIGNMENTS FOR PIN 1 ORIENTATION IN TAPE

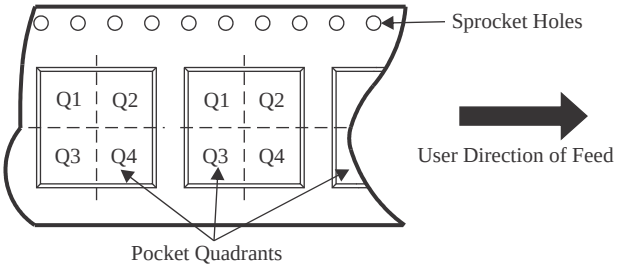

*All dimensions are nominal

Device	Package Type	Package Drawing	Pins	SPQ	Reel Diameter (mm)	Reel Width W1 (mm)	A0 (mm)	B0 (mm)	K0 (mm)	P1 (mm)	W (mm)	Pin1 Quadrant
TMP468AIRGTR	VQFN	RGT	16	3000	330.0	12.4	3.3	3.3	1.1	8.0	12.0	Q2
TMP468AIRGTRG4	VQFN	RGT	16	3000	330.0	12.4	3.3	3.3	1.1	8.0	12.0	Q2
TMP468AIYFFR	DSBGA	YFF	16	3000	180.0	8.4	1.65	1.65	0.81	4.0	8.0	Q1

TAPE AND REEL BOX DIMENSIONS

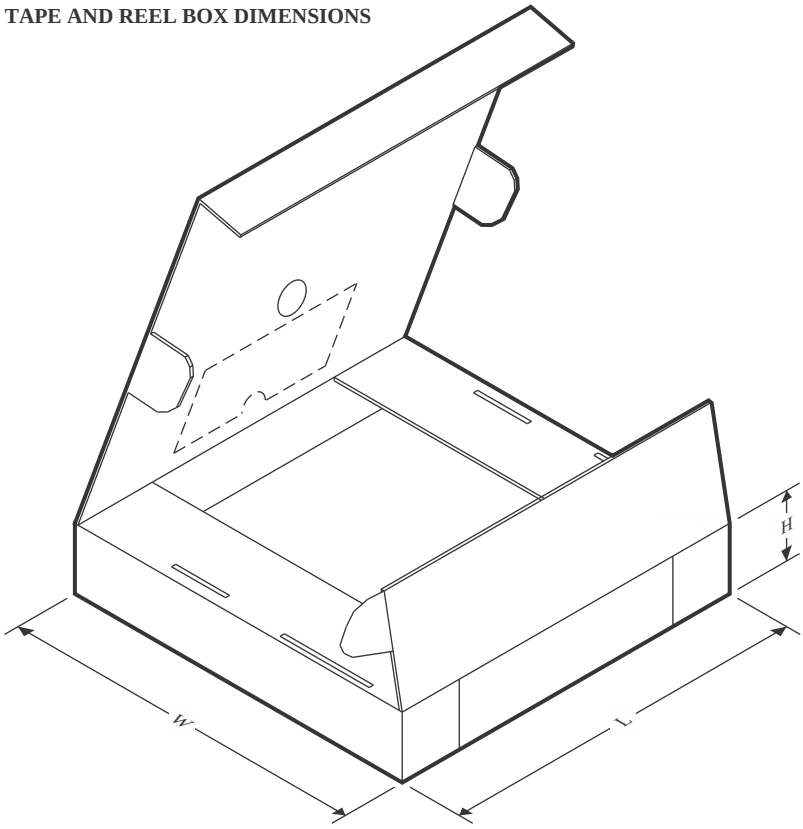

*All dimensions are nominal

Device	Package Type	Package Drawing	Pins	SPQ	Length (mm)	Width (mm)	Height (mm)
TMP468AIRGTR	VQFN	RGT	16	3000	367.0	367.0	35.0
TMP468AIRGTRG4	VQFN	RGT	16	3000	367.0	367.0	35.0
TMP468AIYFFR	DSBGA	YFF	16	3000	182.0	182.0	20.0

RGT 16

VQFN - 1 mm max height

PLASTIC QUAD FLATPACK - NO LEAD

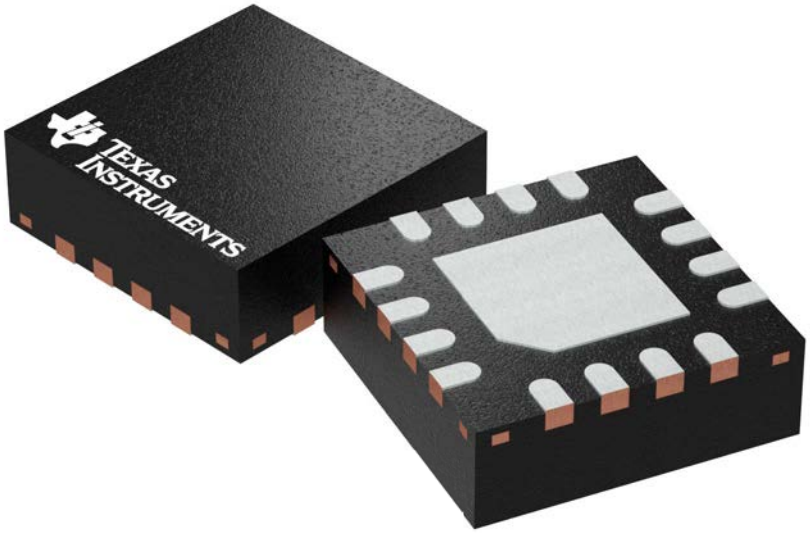

Images above are just a representation of the package family, actual package may vary.
Refer to the product data sheet for package details.

4203495/I

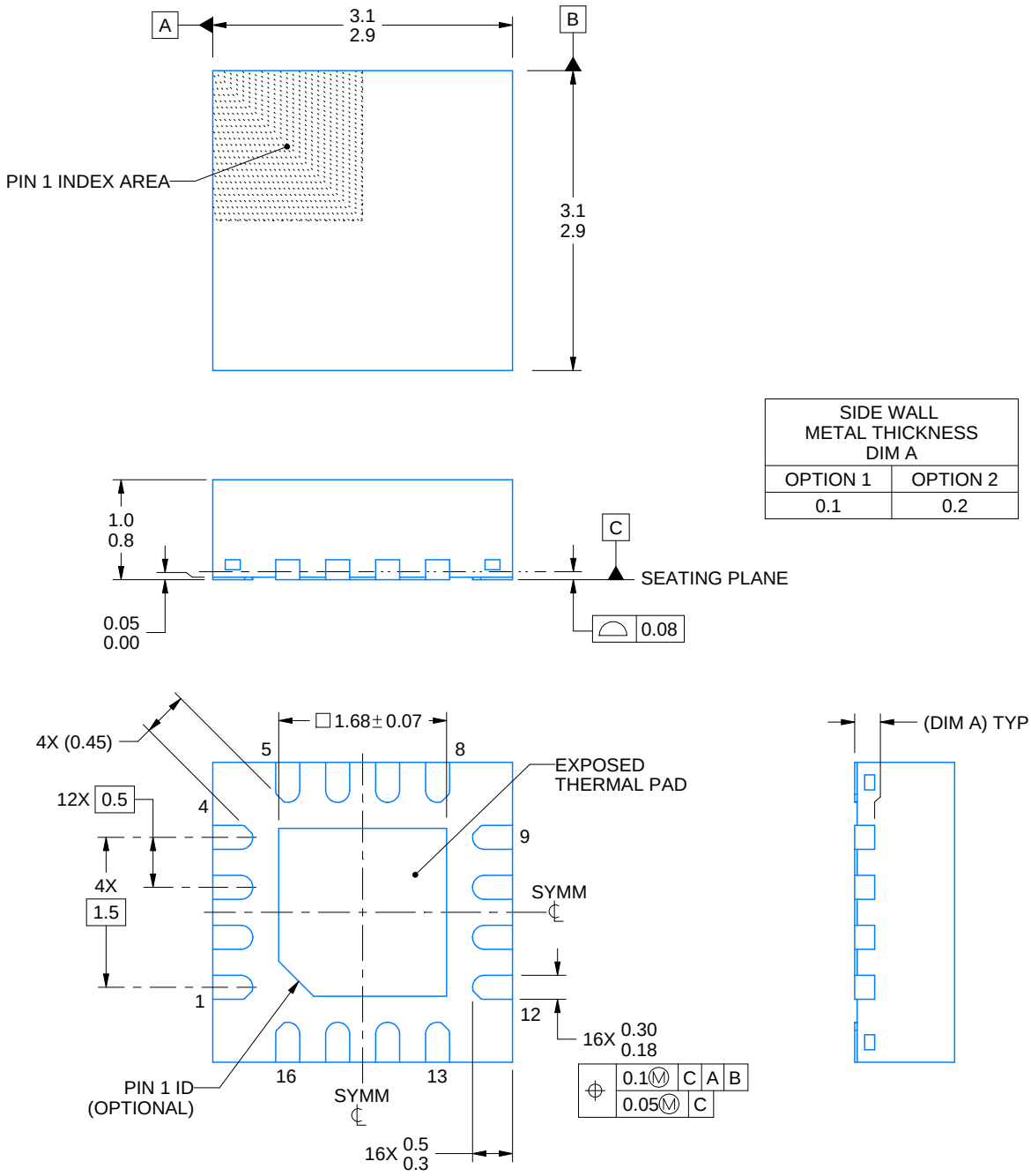

SIDE WALL METAL THICKNESS DIM A	
OPTION 1	OPTION 2
0.1	0.2

4222419/E 07/2025

NOTES:

1. All linear dimensions are in millimeters. Any dimensions in parenthesis are for reference only. Dimensioning and tolerancing per ASME Y14.5M.
2. This drawing is subject to change without notice.
3. The package thermal pad must be soldered to the printed circuit board for thermal and mechanical performance.

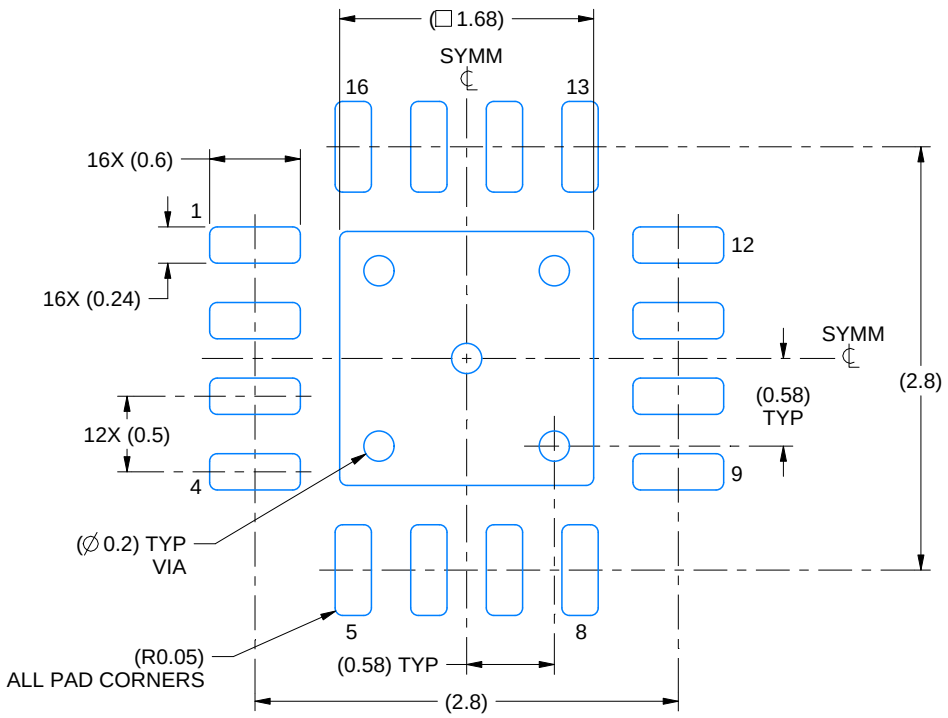

LAND PATTERN EXAMPLE
EXPOSED METAL SHOWN
SCALE:20X

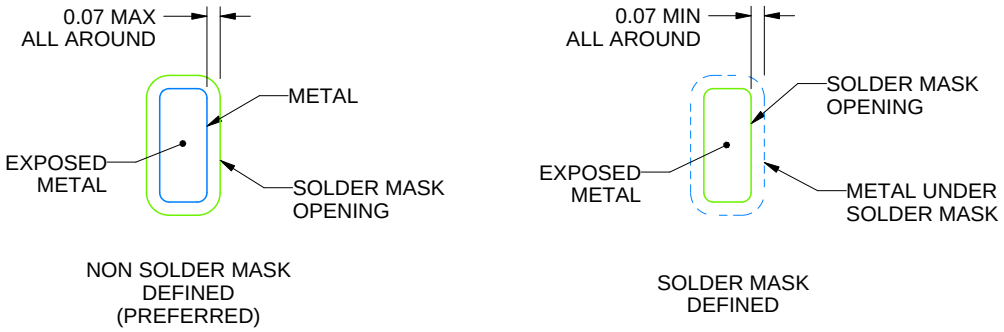

SOLDER MASK DETAILS

4222419/E 07/2025

NOTES: (continued)

4. This package is designed to be soldered to a thermal pad on the board. For more information, see Texas Instruments literature number SLUA271 (www.ti.com/lit/slua271).
5. Vias are optional depending on application, refer to device data sheet. If any vias are implemented, refer to their locations shown on this view. It is recommended that vias under paste be filled, plugged or tented.

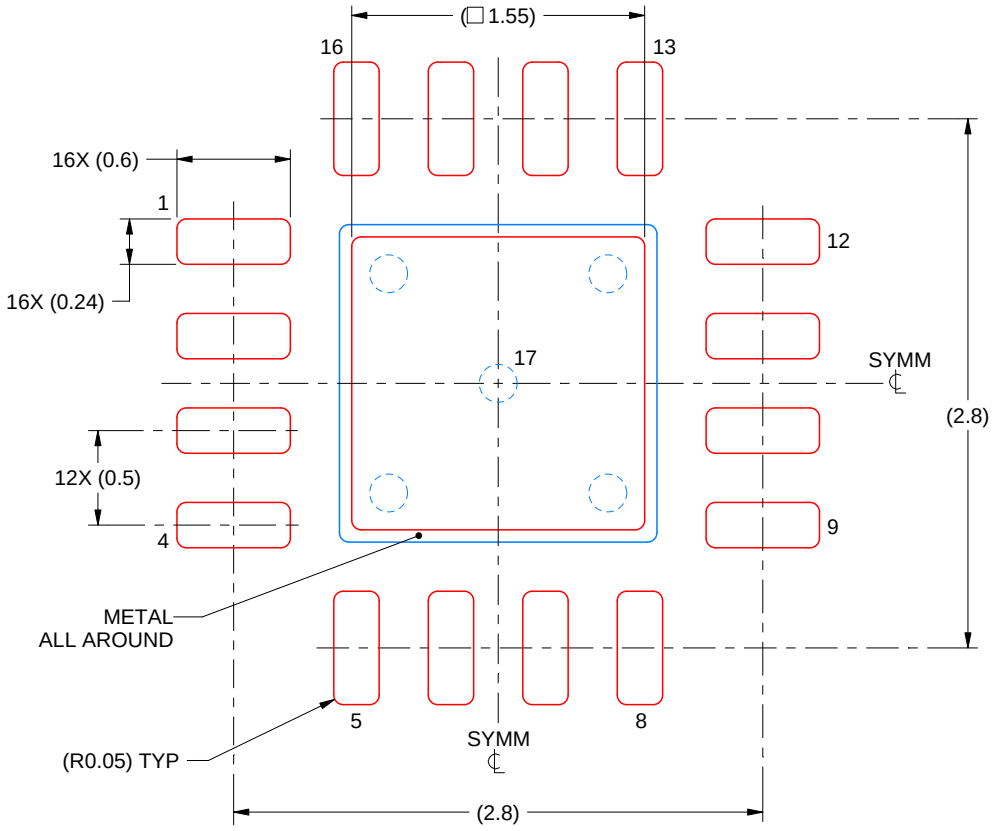

SOLDER PASTE EXAMPLE
BASED ON 0.125 mm THICK STENCIL

EXPOSED PAD 17:
85% PRINTED SOLDER COVERAGE BY AREA UNDER PACKAGE
SCALE:25X

4222419/E 07/2025

NOTES: (continued)

6. Laser cutting apertures with trapezoidal walls and rounded corners may offer better paste release. IPC-7525 may have alternate design recommendations.

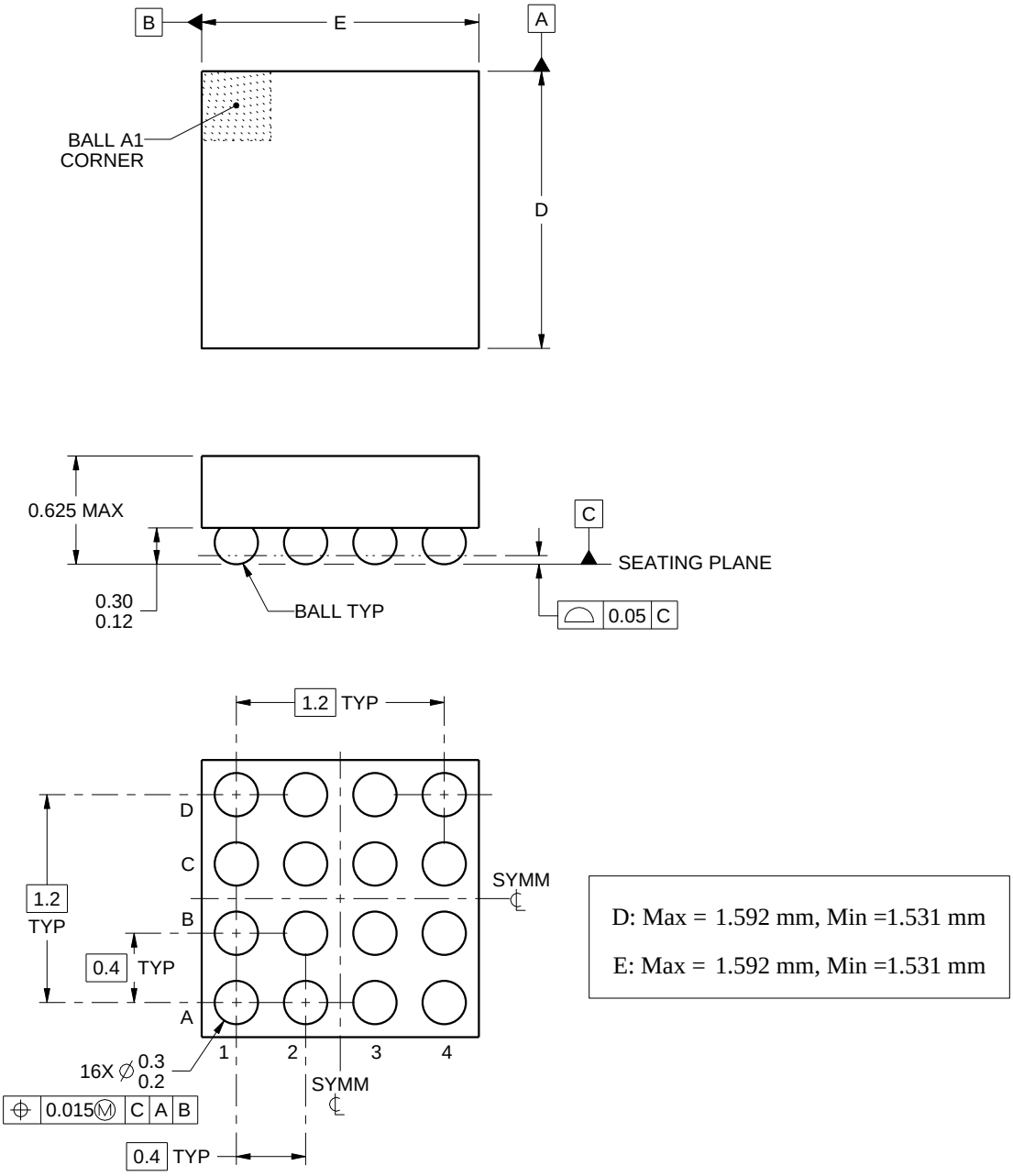

4219386/A 05/2016

NOTES:

1. All linear dimensions are in millimeters. Any dimensions in parenthesis are for reference only. Dimensioning and tolerancing per ASME Y14.5M.
2. This drawing is subject to change without notice.

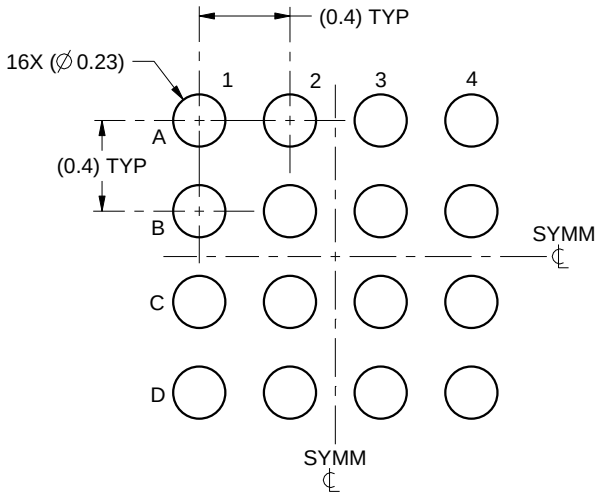

LAND PATTERN EXAMPLE
SCALE:30X

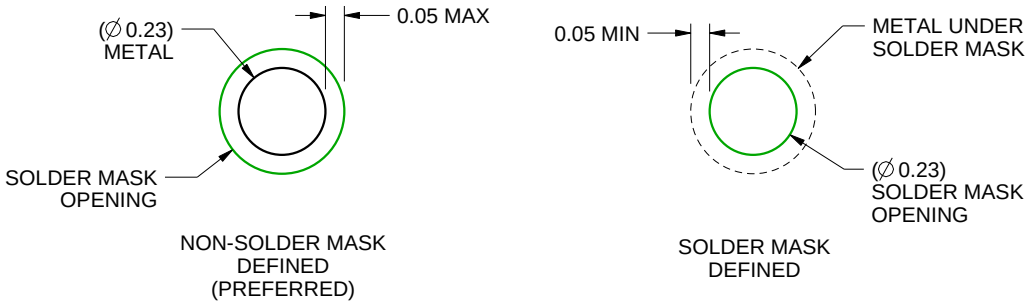

SOLDER MASK DETAILS
NOT TO SCALE

4219386/A 05/2016

NOTES: (continued)

3. Final dimensions may vary due to manufacturing tolerance considerations and also routing constraints. For more information, see Texas Instruments literature number SNVA009 (www.ti.com/lit/snva009).

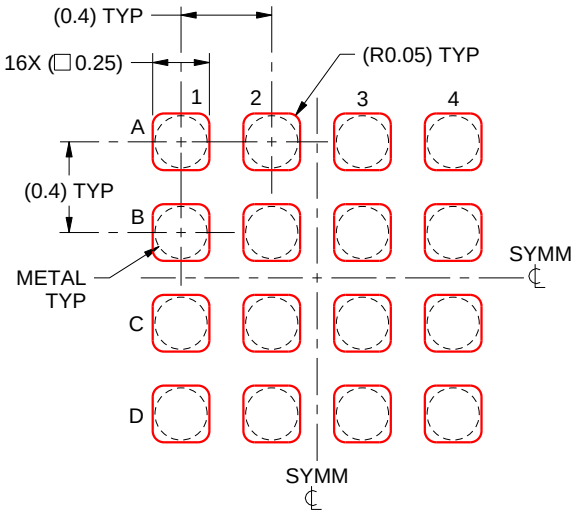

SOLDER PASTE EXAMPLE
BASED ON 0.1 mm THICK STENCIL
SCALE:30X

4219386/A 05/2016

NOTES: (continued)

4. Laser cutting apertures with trapezoidal walls and rounded corners may offer better paste release.

IMPORTANT NOTICE AND DISCLAIMER

TI PROVIDES TECHNICAL AND RELIABILITY DATA (INCLUDING DATASHEETS), DESIGN RESOURCES (INCLUDING REFERENCE DESIGNS), APPLICATION OR OTHER DESIGN ADVICE, WEB TOOLS, SAFETY INFORMATION, AND OTHER RESOURCES “AS IS” AND WITH ALL FAULTS, AND DISCLAIMS ALL WARRANTIES, EXPRESS AND IMPLIED, INCLUDING WITHOUT LIMITATION ANY IMPLIED WARRANTIES OF MERCHANTABILITY, FITNESS FOR A PARTICULAR PURPOSE OR NON-INFRINGEMENT OF THIRD PARTY INTELLECTUAL PROPERTY RIGHTS.

These resources are intended for skilled developers designing with TI products. You are solely responsible for (1) selecting the appropriate TI products for your application, (2) designing, validating and testing your application, and (3) ensuring your application meets applicable standards, and any other safety, security, regulatory or other requirements.

These resources are subject to change without notice. TI grants you permission to use these resources only for development of an application that uses the TI products described in the resource. Other reproduction and display of these resources is prohibited. No license is granted to any other TI intellectual property right or to any third party intellectual property right. TI disclaims responsibility for, and you fully indemnify TI and its representatives against any claims, damages, costs, losses, and liabilities arising out of your use of these resources.

TI’s products are provided subject to TI’s Terms of Sale, TI’s General Quality Guidelines, or other applicable terms available either on ti.com or provided in conjunction with such TI products. TI’s provision of these resources does not expand or otherwise alter TI’s applicable warranties or warranty disclaimers for TI products. Unless TI explicitly designates a product as custom or customer-specified, TI products are standard, catalog, general purpose devices.

TI objects to and rejects any additional or different terms you may propose.

Copyright © 2025, Texas Instruments Incorporated

Last updated 10/2025