SNx4AHC74 Dual Positive-Edge-Triggered D-Type Flip-Flops With Clear and Preset

1 Features

- Operating range 2V to 5.5V V_{CC}
- Latch-up performance exceeds 250mA per JESD 17
- ESD protection exceeds JESD 22
  - 2000V Human-Body Model (A114-A)
  - 200V Machine Model (A115-A)
  - 1000V Charged-Device Model (C101)

2 Applications

- Convert a momentary switch to a toggle switch
- Hold a signal during controller reset
- Input slow edge-rate signals
- Operate in noisy environments
- Divide a clock signal by two

3 Description

The SNx4AHC74 dual positive-edge-triggered devices are D-type flip-flops.

A low level at the preset ($\overline{PRE}$) or clear ($\overline{CLR}$) inputs sets or resets the outputs, regardless of the levels of the other inputs. When $\overline{PRE}$ and $\overline{CLR}$ are inactive (high), data at the data (D) input meeting the setup time requirements is transferred to the outputs on the positive-going edge of the clock pulse. Clock triggering occurs at a voltage level and is not directly related to the rise time of the clock pulse. Following the hold-time interval, data at the D input can be changed without affecting the levels at the outputs.

Device Information

PART NUMBER	RATING	PACKAGE(1)
SN54AHC74	Military	FK (LCCC, 20)
		J (CDIP, 14)
		W (CFP, 14)
SN74AHC74	Commercial	D (SOIC, 14)
		DB (SSOP, 14)
		DGV (TVSOP, 14)
		N (PDIP, 14)
		NS (SO, 14)
		PW (TSSOP, 14)
		RGY (VQFN, 14)
		BQA (WQFN, 14)

(1) For more information, see Section 11.

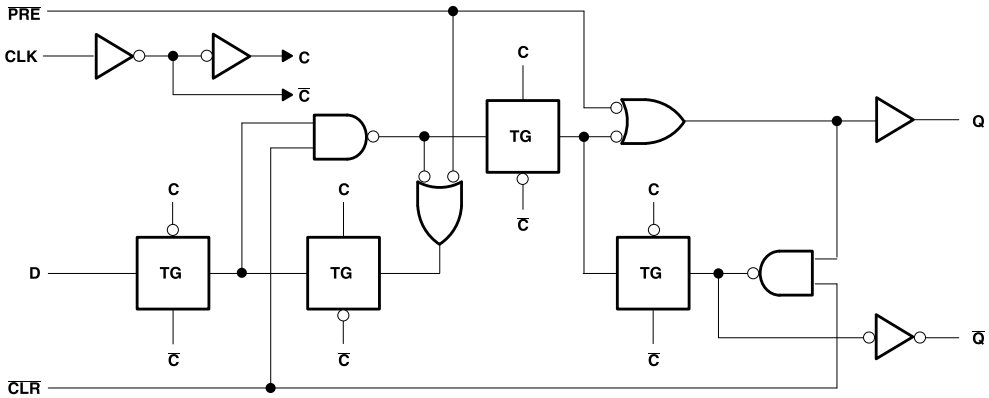

Logic Diagram (Positive Logic)

An IMPORTANT NOTICE at the end of this data sheet addresses availability, warranty, changes, use in safety-critical applications, intellectual property matters and other important disclaimers. PRODUCTION DATA.

Table of Contents

1 Features....1
2 Applications....1
3 Description....1
4 Pin Configuration and Functions....3
5 Specifications....5
5.1 Absolute Maximum Ratings....5
5.2 ESD Ratings....5
5.3 Recommended Operating Conditions....5
5.4 Thermal Information — SN74AHC74....6
5.5 Electrical Characteristics....6
5.6 Timing Requirements — V_{CC} = 3.3 V ± 0.3 V....6
5.7 Timing Requirements — V_{CC} = 5 V ± 0.5 V....6
5.8 Switching Characteristics — V_{CC} = 3.3 V ± 0.5 V....7
5.9 Switching Characteristics — V_{CC} = 5 V ± 0.5 V....7
5.10 Noise Characteristics....7
5.11 Operating Characteristics....8
6 Parameter Measurement Information....9
7 Detailed Description....10
7.1 Overview....10
7.2 Functional Block Diagram....10
7.3 Device Functional Modes....10
8 Application and Implementation....11
8.1 Application Information....11
8.2 Typical Application....11
8.3 Power Supply Recommendations....13
8.4 Layout....14
9 Device and Documentation Support....15
9.1 Documentation Support....15
9.2 Receiving Notification of Documentation Updates....15
9.3 Support Resources....15
9.4 Trademarks....15
9.5 Electrostatic Discharge Caution....15
9.6 Glossary....15
10 Revision History....15
11 Mechanical, Packaging, and Orderable Information....15

Copyright © 2024 Texas Instruments Incorporated

4 Pin Configuration and Functions

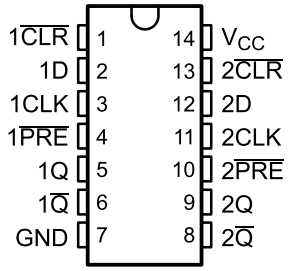

Figure 4-1. SN54AHC74 J or W Package, 14-Pin CDIP or CFP (Top View)

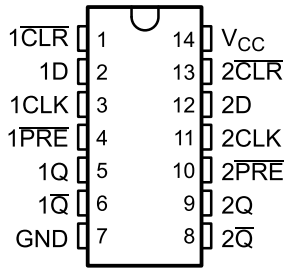

Figure 4-2. SN74AHC74 D, DB, DGV, N, NS, or PW Package, 14-Pin SOIC, SSOP, TVSOP, PDIP, SO, or TSSOP (Top View)

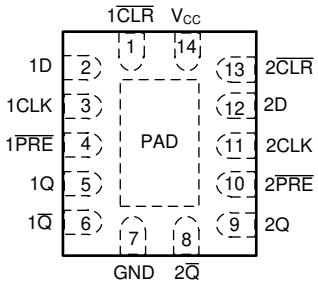

Figure 4-3. SN74AHC74 RGY or BQA Package, 14-Pin VQFN or WQFN With Exposed Thermal Pad (Top View)

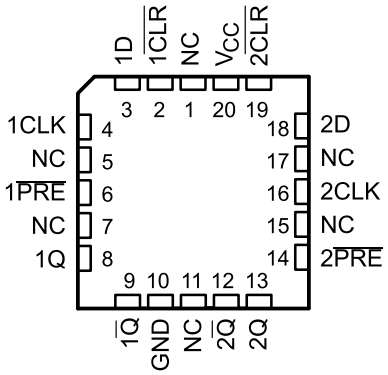

NC − No internal connection

NC – No internal connection

Figure 4-4. SN54AHC74 FK Package, 20-Pin LCCC (Top View)

Table 4-1. Pin Functions

PIN					TYPE[1]	DESCRIPTION
NAME	CDIP or CFP	SOIC, SSOP, TVSOP, PDIP, SO, or TSSOP	VQFN, WQFN	LCCC		
1CLK	3	3	3	4	I	Clock for channel 1, rising edge triggered
1 $\overline{CLR}$	1	1	1	2	I	Clear for channel 1, active low
1D	2	2	2	3	I	Data for channel 1
1 $\overline{PRE}$	4	4	4	6	I	Preset for channel 1, active low
1Q	5	5	5	8	O	Output for channel 1
1 $\overline{Q}$	6	6	6	9	O	Inverted output for channel 1
2CLK	11	11	11	16	I	Clock for channel 2, rising edge triggered
2 $\overline{CLR}$	13	13	13	19	I	Clear for channel 2, active low
2D	12	12	12	18	I	Data for channel 2
2 $\overline{PRE}$	10	10	10	14	I	Preset for channel 2, active low
2Q	9	9	9	13	O	Output for channel 2
2 $\overline{Q}$	8	8	8	12	O	Inverted output for channel 2
GND	7	7	7	10	—	Ground
NC	—	—	—	1, 5, 7, 11, 15, 17	—	No internal connection
V_{CC}	14	14	14	20		Positive supply
Thermal Pad					—	Thermal Pad

(1) I = input, O = output

Copyright © 2024 Texas Instruments Incorporated

5 Specifications

5.1 Absolute Maximum Ratings

over operating free-air temperature range (unless otherwise noted)[1]

			MIN	MAX	UNIT
V_{CC}	Supply voltage		–0.5	7	V
V_I [2]	Input voltage		–0.5	7	V
V_O [2]	Output voltage		–0.5	V_{CC} + 0.5	V
I_{IK}	Input clamp current	(V_I < 0)	–20		mA
I_{OK}	Output clamp current	(V_O < 0 or V_O > V_{CC})	–20	20	mA
I_O	Continuous output current	(V_O = 0 to V_{CC})	–25	25	mA
	Continuous current through V_{CC} or GND		–50	50	mA
T_{stg}	Storage temperature		–65	150	°C

(1) Stresses beyond those listed under *Absolute Maximum Ratings* may cause permanent damage to the device. These are stress ratings only, which do not imply functional operation of the device at these or any other conditions beyond those indicated under *Recommended Operating Conditions*. Exposure to absolute-maximum-rated conditions for extended periods may affect device reliability.
(2) The input and output voltage ratings may be exceeded if the input and output current ratings are observed.

5.2 ESD Ratings

			VALUE	UNIT
$V_{(ESD)}$	Electrostatic discharge	Human-body model (HBM), per ANSI/ESDA/JEDEC JS-001[1]	±2000	V
		Charged-device model (CDM), per JEDEC specification JESD22-C101[2]	±1000	

(1) JEDEC document JEP155 states that 500-V HBM allows safe manufacturing with a standard ESD control process.
(2) JEDEC document JEP157 states that 250-V CDM allows safe manufacturing with a standard ESD control process.

5.3 Recommended Operating Conditions

over operating free-air temperature range (unless otherwise noted)[1]

			SN54AHC74		SN74AHC74		UNIT
			MIN	MAX	MIN	MAX	
V_{CC}	Supply voltage		2	5.5	2	5.5	V
V_{IH}	High-level input voltage	V_{CC} = 2 V	1.5		1.5		V
		V_{CC} = 3 V	2.1		2.1		
		V_{CC} = 5.5 V	3.85		3.85		
V_{IL}	Low-level input voltage	V_{CC} = 2 V		0.5		0.5	V
		V_{CC} = 3 V		0.9		0.9	
		V_{CC} = 5.5 V		1.65		1.65	
V_I	Input voltage		0	5.5	0	5.5	V
V_O	Output voltage		0	V_{CC}	0	V_{CC}	V
I_{OH}	High-level output current	V_{CC} = 2 V		–50		–50	µA
		V_{CC} = 3.3 V ± 0.3 V		–4		–4	mA
		V_{CC} = 5 V ± 0.5 V		–8		–8	
I_{OL}	Low-level output current	V_{CC} = 2 V		50		50	µA
		V_{CC} = 3.3 V ± 0.3 V		4		4	mA
		V_{CC} = 5 V ± 0.5 V		8		8	
Δt/Δv	Input transition rise or fall rate	V_{CC} = 3.3 V ± 0.3 V		100		100	ns/V
		V_{CC} = 5 V ± 0.5 V		20		20	
T_A	Operating free-air temperature		–55	125	–40	125	°C

(1) All unused inputs of the device must be held at V_{CC} or GND to ensure proper device operation. See *Implications of Slow or Floating CMOS Inputs*, SCBA004.

5.4 Thermal Information — SN74AHC74

THERMAL METRIC[1]		SNx4AHC74								UNIT
		D (SOIC)	DB (SSOP)	DGV (TVSOP)	N (PDIP)	NS (SO)	PW (TSSOP)	RGY (VQFN)	BQA (WQFN)	
		14 PINS	14 PINS	14 PINS	14 PINS	14 PINS	14 PINS	14 PINS	14 PINS	
$R_{\theta JA}$	Junction-to-ambient thermal resistance	124.5	96	127	80	76	147.7	87.1	88.3	°C/W

(1) For more information about traditional and new thermal metrics, see the *Semiconductor and IC Package Thermal Metrics* application report.

5.5 Electrical Characteristics

over recommended operating free-air temperature range (unless otherwise noted)

PARAMETER	TEST CONDITIONS	V_{CC}	T_A = 25°C			–55°C to +125°C SN54AHC74		–40°C to +85°C SN74AHC74		–40°C to +125°C SN74AHC74		UNIT
			MIN	TYP	MAX	MIN	MAX	MIN	MAX	MIN	MAX	
V_{OH}	I_{OH} = –50 µA	2 V	1.9	2		1.9		1.9		1.9		V
		3 V	2.9	3		2.9		2.9		2.9		
		4.5 V	4.4	4.5		4.4		4.4		4.4		
	I_{OH} = –4 mA	3 V	2.58			2.48		2.48		2.48		
	I_{OH} = –8 mA	4.5 V	3.94			3.8		3.8		3.8		
V_{OL}	I_{OL} = 50 µA	2 V			0.1		0.1		0.1		0.1	V
		3 V			0.1		0.1		0.1		0.1	
		4.5 V			0.1		0.1		0.1		0.1	
	I_{OL} = 4 mA	3 V			0.36		0.5		0.44		0.5	
	I_{OH} = 8 mA	4.5 V			0.36		0.5		0.44		0.5	
I_I	V_I = 5.5 V or GND	0 V to 5.5 V			±0.1		±1[1]		±1		±1	µA
I_{CC}	V_I = V_{CC} or GND, I_O = 0	5.5 V			2		20		20		20	µA
C_i	V_I = V_{CC} or GND	5 V		2	10				10			pF

(1) On products compliant to MIL-PRF-38535, this parameter is not production tested at V_{CC} = 0 V.

5.6 Timing Requirements — V_{CC} = 3.3 V ± 0.3 V

over recommended operating free-air temperature range, (unless otherwise noted)

			T_A = 25°C		SN54AHC74		–40°C to +85°C SN74AHC74		–40°C to +125°C SN74AHC74		UNIT
			MIN	MAX	MIN	MAX	MIN	MAX	MIN	MAX	
t_w	Pulse duration	$\overline{PRE}$ or $\overline{CLR}$ low	6		7		7		7		ns
		CLK	6		7		7		7		
t_{su}	Setup time before CLK↑	Data	6		7		7		7		ns
		$\overline{PRE}$ or $\overline{CLR}$ inactive	5		5		5		5		
t_h	Hold time, data after CLK↑		0.5		0.5		0.5		0.5		ns

5.7 Timing Requirements — V_{CC} = 5 V ± 0.5 V

over recommended operating free-air temperature range, (unless otherwise noted)

			T_A = 25°C		SN54AHC74		–40°C to +85°C SN74AHC74		–40°C to +125°C SN74AHC74		UNIT
			MIN	MAX	MIN	MAX	MIN	MAX	MIN	MAX	
t_w	Pulse duration	$\overline{PRE}$ or $\overline{CLR}$ low	5		5		5		5		ns
		CLK	5		5		5		5		

Copyright © 2024 Texas Instruments Incorporated

over recommended operating free-air temperature range, (unless otherwise noted)

			T_A = 25°C		SN54AHC74		–40°C to +85°C SN74AHC74		–40°C to +125°C SN74AHC74		UNIT
			MIN	MAX	MIN	MAX	MIN	MAX	MIN	MAX	
t_{su}	Setup time before CLK↑	Data	5		5		5		5		ns
		$\overline{PRE}$ or $\overline{CLR}$ inactive	3		3		3		3		
t_h	Hold time, data after CLK↑		0.5		0.5		0.5		0.5		ns

5.8 Switching Characteristics — V_{CC} = 3.3 V ± 0.5 V

over recommended operating free-air temperature range, (unless otherwise noted)

PARAMETER	FROM (INPUT)	TO (OUTPUT)	LOAD CAPACITANCE	T_A = 25°C			SN54AHC74		–40°C to +85°C SN74AHC74		–40°C to +125°C SN74AHC74		UNIT
				MIN	TYP	MAX	MIN	MAX	MIN	MAX	MIN	MAX	
f_{max}			C_L = 15 pF	80[1]	125[1]		70[1]		70		70		MHz
			C_L = 50 pF	50	75		45		45		45		
t_{PLH}	$\overline{PRE}$ or $\overline{CLR}$	Q or $\overline{Q}$	C_L = 15 pF		7.6[1]	12.3[1]	1[1]	14.5[1]	1	14.5	1	14.5	ns
t_{PHL}					7.6	12.3	1[1]	14.5[1]	1	14.5	1	14.5	
t_{PLH}	CLK	Q or $\overline{Q}$	C_L = 15 pF		6.7	11.9	1[1]	14[1]	1	14	1	14	ns
t_{PHL}					6.7	11.9	1[1]	14[1]	1	14	1	14	
t_{PLH}	$\overline{PRE}$ or $\overline{CLR}$	Q or $\overline{Q}$	C_L = 50 pF		10.1	15.8	1	18	1	18	1	18	ns
t_{PHL}					10.1	15.8	1	18	1	18	1	18	
t_{PLH}	CLK	Q or $\overline{Q}$	C_L = 50 pF		9.2	15.4	1	17.5	1	17.5	1	17.5	ns
t_{PHL}					9.2	15.4	1	17.5	1	17.5	1	17.5	

(1) On products compliant to MIL-PRF-38535, this parameter is not production tested.

5.9 Switching Characteristics — V_{CC} = 5 V ± 0.5 V

over recommended operating free-air temperature range, (unless otherwise noted)

PARAMETER	FROM (INPUT)	TO (OUTPUT)	LOAD CAPACITANCE	T_A = 25°C			SN54AHC74		–40°C to +85°C SN74AHC74		–40°C to +125°C SN74AHC74		UNIT
				MIN	TYP	MAX	MIN	MAX	MIN	MAX	MIN	MAX	
f_{max}			C_L = 15 pF	130[1]	170[1]		110[1]		110		110		MHz
			C_L = 50 pF	90	115		75		75		75		
t_{PLH}	$\overline{PRE}$ or $\overline{CLR}$	Q or $\overline{Q}$	C_L = 15 pF		4.8[1]	7.7[1]	1[1]	9[1]	1	9	1	9	ns
t_{PHL}					4.8[1]	7.7[1]	1[1]	9[1]	1	9	1	9	
t_{PLH}	CLK	Q or $\overline{Q}$	C_L = 15 pF		4.6[1]	7.3[1]	1[1]	8.5[1]	1	8.5	1	8.5	ns
t_{PHL}					4.6[1]	7.3[1]	1[1]	8.5[1]	1	8.5	1	8.5	
t_{PLH}	$\overline{PRE}$ or $\overline{CLR}$	Q or $\overline{Q}$	C_L = 50 pF		6.3	9.7	1	11	1	11	1	11	ns
t_{PHL}					6.3	9.7	1	11	1	11	1	11	
t_{PLH}	CLK	Q or $\overline{Q}$	C_L = 50 pF		6.1	9.3	1	10.5	1	10.5	1	10.5	ns
t_{PHL}					6.1	9.3	1	10.5	1	10.5	1	10.5	

(1) On products compliant to MIL-PRF-38535, this parameter is not production tested.

5.10 Noise Characteristics

V_{CC} = 5 V, C_L = 50 pF, T_A = 25°C (see [1])

PARAMETER		SN74AHCT74		UNIT
		MIN	MAX	
$V_{OL(P)}$	Quiet output, maximum dynamic V_{OL}		0.8	V
$V_{OL(V)}$	Quiet output, minimum dynamic V_{OL}		–0.8	V
$V_{OH(V)}$	Quiet output, minimum dynamic V_{OH}	4.7		V
$V_{IH(D)}$	High-level dynamic input voltage	3.5		V

Copyright © 2024 Texas Instruments Incorporated

V_{CC} = 5 V, C_L = 50 pF, T_A = 25°C (see [1])

PARAMETER		SN74AHCT74		UNIT
		MIN	MAX	
$V_{IL(D)}$	Low-level dynamic input voltage		1.5	V

(1) Characteristics are for surface-mount packages only.

5.11 Operating Characteristics

V_{CC} = 5 V, T_A = 25°C

PARAMETER		TEST CONDITIONS		TYP	UNIT
C_{pd}	Power dissipation capacitance	No load,	f = 1 MHz	32	pF

Copyright © 2024 Texas Instruments Incorporated

6 Parameter Measurement Information

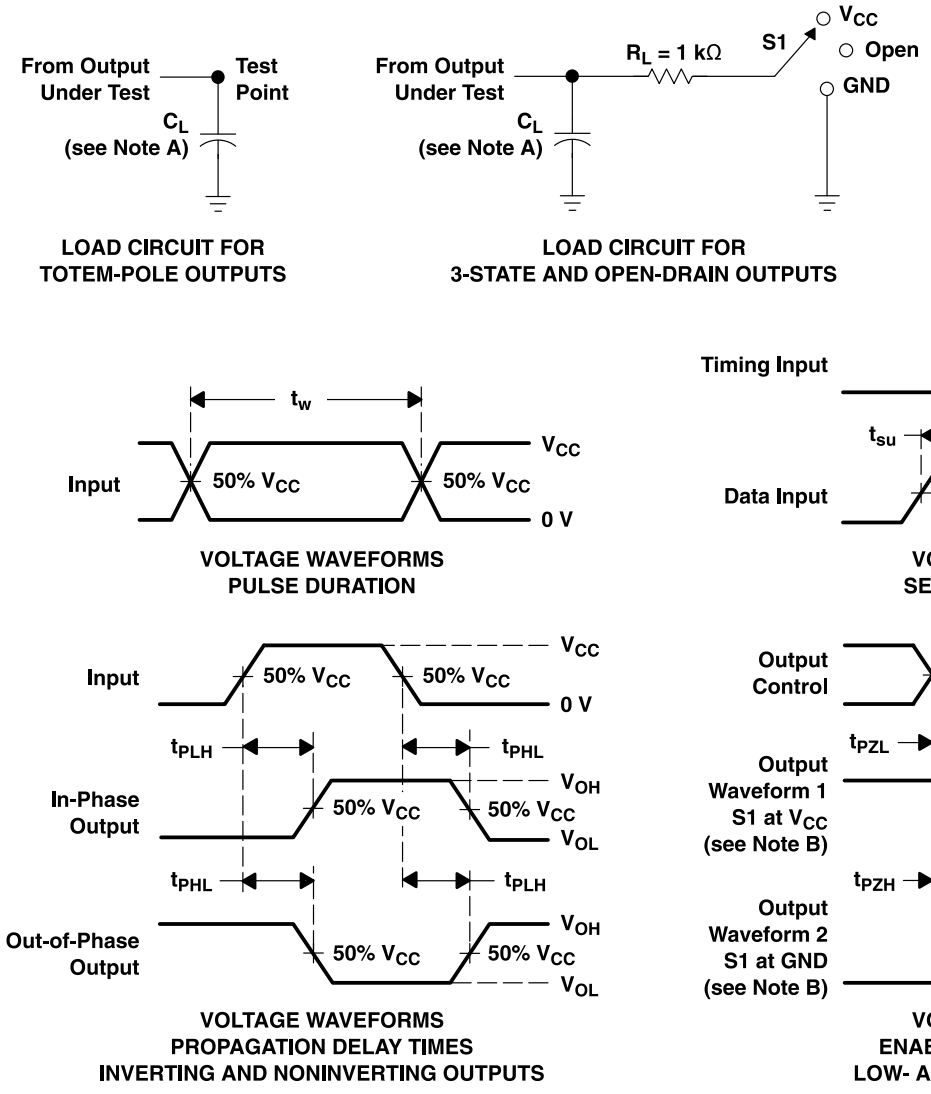

TEST	S1
t_{PLH}/t_{PHL}	Open
t_{PLZ}/t_{PZL}	V_{CC}
t_{PHZ}/t_{PZH}	GND
Open Drain	V_{CC}

NOTES: A. C_L includes probe and jig capacitance.
B. Waveform 1 is for an output with internal conditions such that the output is low except when disabled by the output control. Waveform 2 is for an output with internal conditions such that the output is high except when disabled by the output control.
C. All input pulses are supplied by generators having the following characteristics: PRR ≤ 1 MHz, Z_O = 50 Ω, t_r ≤ 3 ns, t_f ≤ 3 ns.
D. The outputs are measured one at a time with one input transition per measurement.
E. All parameters and waveforms are not applicable to all devices.

Figure 6-1. Load Circuit And Voltage Waveforms

7 Detailed Description

7.1 Overview

The SNx4AHC74 dual positive-edge-triggered devices are D-type flip-flops.

A low level at the preset ($\overline{PRE}$) or clear ($\overline{CLR}$) inputs sets or resets the outputs, regardless of the levels of the other inputs. When $\overline{PRE}$ and $\overline{CLR}$ are inactive (high), data at the data (D) input meeting the setup time requirements is transferred to the outputs on the positive-going edge of the clock pulse. Clock triggering occurs at a voltage level and is not directly related to the rise time of the clock pulse. Following the hold-time interval, data at the D input can be changed without affecting the levels at the outputs.

7.2 Functional Block Diagram

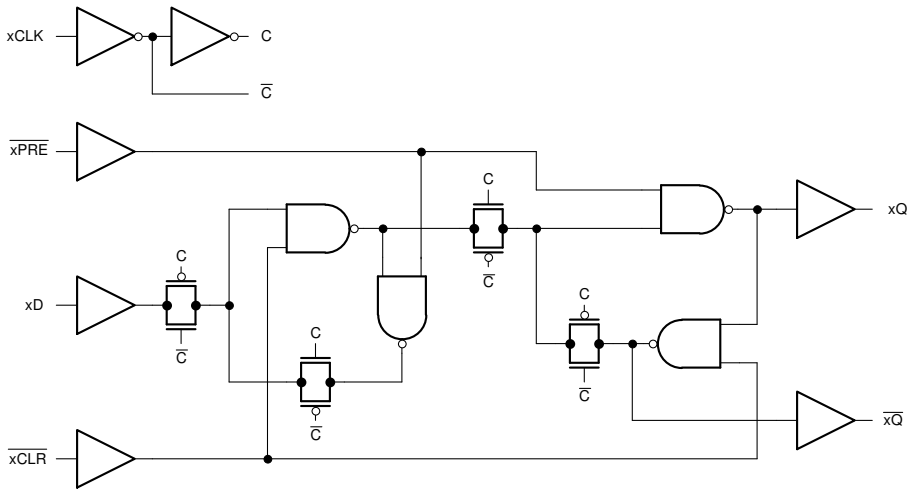

Figure 7-1. Logic Diagram (Positive Logic) for One Channel of SNx4AHC74

7.3 Device Functional Modes

Table 7-1 shows the function table for each input and output.

Table 7-1. Function Table (Each Flip-Flop)

INPUTS				OUTPUTS	
$\overline{PRE}$	$\overline{CLR}$	CLK	D	Q	$\overline{Q}$
L	H	X	X	H	L
H	L	X	X	L	H
L	L	X	X	H(1)	H(1)
H	H	↑	H	H	L
H	H	↑	L	L	H
H	H	L	X	Q_0	$\overline{Q}_0$

(1) This configuration is unstable; that is, it does not persist when $\overline{PRE}$ or $\overline{CLR}$ returns to its inactive (high) level.

Copyright © 2024 Texas Instruments Incorporated

8 Application and Implementation

Note

Information in the following applications sections is not part of the TI component specification, and TI does not warrant its accuracy or completeness. TI's customers are responsible for determining suitability of components for their purposes, as well as validating and testing their design implementation to confirm system functionality.

8.1 Application Information

Toggle switches are typically large, mechanically complex, and relatively expensive. It is desirable to use a momentary switch instead because they are small, mechanically simple, and cost less. Some systems require the functionality of a toggle switch, but are space or cost constrained and must use a momentary switch instead. External Schmitt-trigger buffers are used to remove noisy inputs into the (CLK) and (D) inputs.

If the data input (D) of the SNx4AHC74 is tied to the inverted output ($\overline{Q}$), then each clock pulse will cause the value at the output (Q) to toggle. The momentary switch can be debounced and directly connected to the clock input (CLK) to toggle the output.

8.2 Typical Application

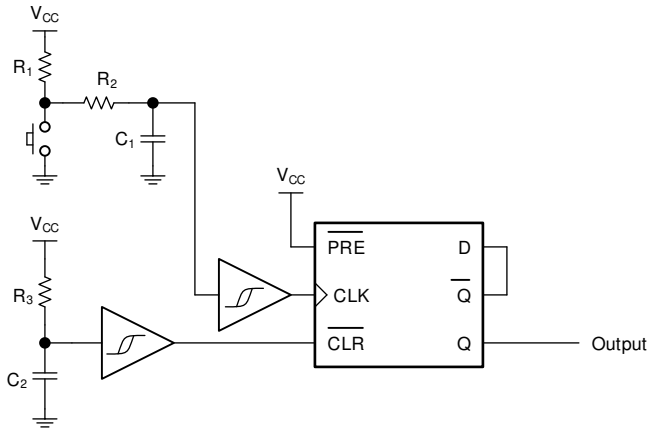

Figure 8-1. Typical Application Block Diagram

8.2.1 Design Requirements

8.2.1.1 Input Considerations

Input signals must cross $V_{IL(max)}$ to be considered a logic LOW, and $V_{IH(min)}$ to be considered a logic HIGH. Do not exceed the maximum input voltage range found in the *Absolute Maximum Ratings*.

Unused inputs must be terminated to either V_{CC} or ground. The unused inputs can be directly terminated if the input is completely unused, or they can be connected with a pull-up or pull-down resistor if the input will be used sometimes, but not always. A pull-up resistor is used for a default state of HIGH, and a pull-down resistor is used for a default state of LOW. The drive current of the controller, leakage current into the SNx4AHC74 (as specified in the *Electrical Characteristics*), and the desired input transition rate limits the resistor size. A 10-kΩ resistor value is often used due to these factors.

The SNx4AHC74 has CMOS inputs and thus requires fast input transitions to operate correctly, as defined in the *Recommended Operating Conditions* table. Slow input transitions can cause oscillations, additional power consumption, and reduction in device reliability.

Refer to the *Feature Description* section for additional information regarding the inputs for this device.

Copyright © 2024 Texas Instruments Incorporated

8.2.1.2 Output Considerations

The positive supply voltage is used to produce the output HIGH voltage. Drawing current from the output will decrease the output voltage as specified by the V_{OH} specification in the *Electrical Characteristics*. The ground voltage is used to produce the output LOW voltage. Sinking current into the output will increase the output voltage as specified by the V_{OL} specification in the *Electrical Characteristics*.

Push-pull outputs that could be in opposite states, even for a very short time period, should never be connected directly together. This can cause excessive current and damage to the device.

Two channels within the same device with the same input signals can be connected in parallel for additional output drive strength.

Unused outputs can be left floating. Do not connect outputs directly to V_{CC} or ground.

Refer to the *Feature Description* section for additional information regarding the outputs for this device.

8.2.1.3 Power Considerations

Ensure the desired supply voltage is within the range specified in the *Recommended Operating Conditions*. The supply voltage sets the electrical characteristics of the device as described in the *Electrical Characteristics* section.

The positive voltage supply must be capable of sourcing current equal to the total current to be sourced by all outputs of the SNx4AHC74 plus the maximum static supply current, I_{CC}, listed in the *Electrical Characteristics*, and any transient current required for switching. The logic device can only source as much current that is provided by the positive supply source. Be sure to not exceed the maximum total current through V_{CC} listed in the *Absolute Maximum Ratings*.

The ground must be capable of sinking current equal to the total current to be sunk by all outputs of the SNx4AHC74 plus the maximum supply current, I_{CC}, listed in the *Electrical Characteristics*, and any transient current required for switching. The logic device can only sink as much current that can be sunk into its ground connection. Be sure to not exceed the maximum total current through GND listed in the *Absolute Maximum Ratings*.

The SNx4AHC74 can drive a load with a total capacitance less than or equal to 50 pF while still meeting all of the data sheet specifications. Larger capacitive loads can be applied; however, it is not recommended to exceed 50 pF.

The SNx4AHC74 can drive a load with total resistance described by $R_L \geq V_O / I_O$, with the output voltage and current defined in the *Electrical Characteristics* table with V_{OH} and V_{OL}. When outputting in the HIGH state, the output voltage in the equation is defined as the difference between the measured output voltage and the supply voltage at the V_{CC} pin.

Total power consumption can be calculated using the information provided in *CMOS Power Consumption and Cpd Calculation* application note.

Thermal increase can be calculated using the information provided in *Thermal Characteristics of Standard Linear and Logic (SLL) Packages and Devices* application note.

CAUTION

The maximum junction temperature, $T_{J(max)}$ listed in the *Absolute Maximum Ratings*, is an additional limitation to prevent damage to the device. Do not violate any values listed in the *Absolute Maximum Ratings*. These limits are provided to prevent damage to the device.

Copyright © 2024 Texas Instruments Incorporated

8.2.2 Detailed Design Procedure

1. Add a decoupling capacitor from V_{CC} to GND. The capacitor needs to be placed physically close to the device and electrically close to both the V_{CC} and GND pins. An example layout is shown in the *Layout* section.
2. Ensure the capacitive load at the output is ≤ 50 pF. This is not a hard limit; by design, however, it will optimize performance. This can be accomplished by providing short, appropriately sized traces from the SNx4AHC74 to one or more of the receiving devices.
3. Ensure the resistive load at the output is larger than (V_{CC} / $I_{O(max)}$) Ω. Doing this will prevent the maximum output current from the *Absolute Maximum Ratings* from being violated. Most CMOS inputs have a resistive load measured in MΩ; much larger than the minimum calculated previously.
4. Thermal issues are rarely a concern for logic gates; the power consumption and thermal increase, however, can be calculated using the steps provided in the application report, *CMOS Power Consumption and Cpd Calculation*.

8.2.3 Application Curves

Figure 8-2 shows an example of a single button press bouncing and causing the output to toggle multiple times. This will cause issues in the desired application. Figure 8-3 shows 4 button presses with an added debounce circuit, fixing the unwanted toggling and allowing for proper toggle switch operation.

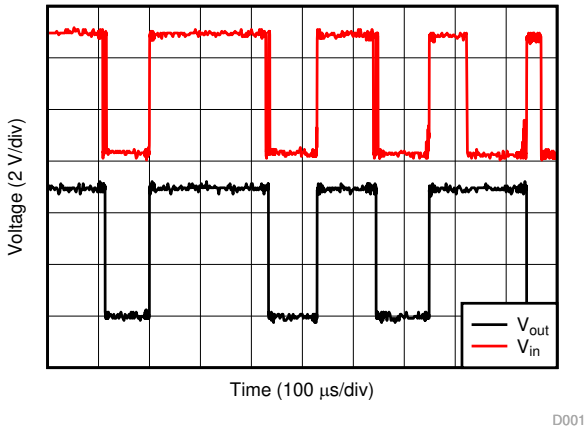

Figure 8-2. Circuit Response Without RC Debounce
V_{in}: = CLK Input, V_{out} := Q Output

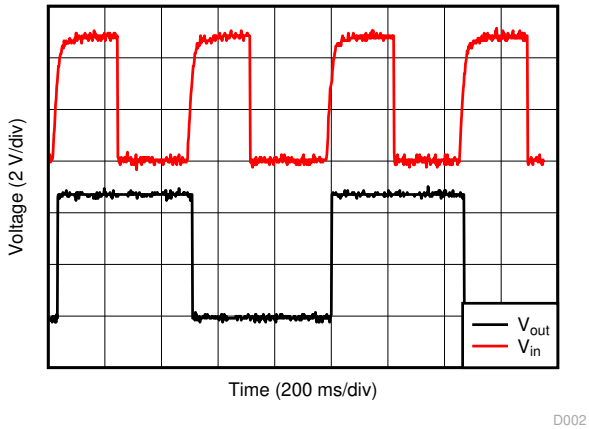

Figure 8-3. Circuit Response with RC Debounce
V_{in}: = CLK Input, V_{out} := Q Output

8.3 Power Supply Recommendations

The power supply can be any voltage between the minimum and maximum supply voltage rating located in the *Recommended Operating Conditions*. Each V_{CC} terminal should have a good bypass capacitor to prevent power disturbance. A 0.1-µF capacitor is recommended for this device. It is acceptable to parallel multiple bypass capacitors to reject different frequencies of noise. The 0.1-µF and 1-µF capacitors are commonly used in parallel. The bypass capacitor should be installed as close to the power terminal as possible for best results, as shown in the following layout example.

Copyright © 2024 Texas Instruments Incorporated

8.4 Layout

8.4.1 Layout Guidelines

When using multiple-input and multiple-channel logic devices, inputs must never be left floating. In many cases, functions or parts of functions of digital logic devices are unused (for example, when only two inputs of a triple-input AND gate are used or only 3 of the 4 buffer gates are used). Such unused input pins must not be left unconnected because the undefined voltages at the outside connections result in undefined operational states. All unused inputs of digital logic devices must be connected to a logic high or logic low voltage, as defined by the input voltage specifications, to prevent them from floating. The logic level that must be applied to any particular unused input depends on the function of the device. Generally, the inputs are tied to GND or V_{CC}, whichever makes more sense for the logic function or is more convenient.

8.4.1.1 Layout Example

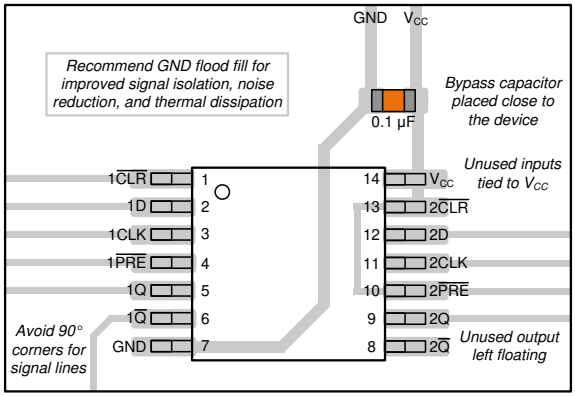

Figure 8-4. Layout Example of the SNx4AHC74

Copyright © 2024 Texas Instruments Incorporated

9 Device and Documentation Support

9.1 Documentation Support

9.1.1 Related Documentation

For related documentation, see the following:

- Texas Instruments, *CMOS Power Consumption and Cpd Calculation*
- Texas Instruments, *Implications of Slow or Floating CMOS Inputs*
- Texas Instruments, *Thermal Characteristics of Standard Linear and Logic (SLL) Packages and Devices*

9.2 Receiving Notification of Documentation Updates

To receive notification of documentation updates, navigate to the device product folder on ti.com. Click on *Notifications* to register and receive a weekly digest of any product information that has changed. For change details, review the revision history included in any revised document.

9.3 Support Resources

TI E2E™ support forums are an engineer's go-to source for fast, verified answers and design help — straight from the experts. Search existing answers or ask your own question to get the quick design help you need.

Linked content is provided "AS IS" by the respective contributors. They do not constitute TI specifications and do not necessarily reflect TI's views; see TI's Terms of Use.

9.4 Trademarks

TI E2E™ is a trademark of Texas Instruments.
All trademarks are the property of their respective owners.

9.5 Electrostatic Discharge Caution

This integrated circuit can be damaged by ESD. Texas Instruments recommends that all integrated circuits be handled with appropriate precautions. Failure to observe proper handling and installation procedures can cause damage.

ESD damage can range from subtle performance degradation to complete device failure. Precision integrated circuits may be more susceptible to damage because very small parametric changes could cause the device not to meet its published specifications.

9.6 Glossary

TI Glossary	This glossary lists and explains terms, acronyms, and definitions.

10 Revision History

NOTE: Page numbers for previous revisions may differ from page numbers in the current version.

Changes from Revision M (October 2023) to Revision N (February 2024)	Page
• Updated RθJA value: RGY = 47 to 87.1, all values in °C/W	6

Changes from Revision L (June 2023) to Revision M (October 2023)	Page
• Updated RθJA values: D = 86 to 124.5, PW = 113 to 147.7, all values in °C/W	6

11 Mechanical, Packaging, and Orderable Information

The following pages include mechanical, packaging, and orderable information. This information is the most current data available for the designated devices. This data is subject to change without notice and revision of this document. For browser-based versions of this data sheet, refer to the left-hand navigation.

Copyright © 2024 Texas Instruments Incorporated

PACKAGING INFORMATION

Orderable part number	Status (1)	Material type (2)	Package | Pins	Package qty | Carrier	RoHS (3)	Lead finish/ Ball material (4)	MSL rating/ Peak reflow (5)	Op temp (°C)	Part marking (6)
5962-9686001Q2A	Active	Production	LCCC (FK) | 20	55 | TUBE	No	SNPB	N/A for Pkg Type	-55 to 125	5962-9686001Q2A SNJ54AHC 74FK
5962-9686001QCA	Active	Production	CDIP (J) | 14	25 | TUBE	No	SNPB	N/A for Pkg Type	-55 to 125	5962-9686001QCA SNJ54AHC74J
5962-9686001QDA	Active	Production	CFP (W) | 14	25 | TUBE	No	SNPB	N/A for Pkg Type	-55 to 125	5962-9686001QDA SNJ54AHC74W
SN74AHC74BQAR	Active	Production	WQFN (BQA) | 14	3000 | LARGE T&R	Yes	NIPDAU	Level-1-260C-UNLIM	-40 to 125	AHC74
SN74AHC74BQAR.A	Active	Production	WQFN (BQA) | 14	3000 | LARGE T&R	Yes	NIPDAU	Level-1-260C-UNLIM	-40 to 125	AHC74
SN74AHC74D	Obsolete	Production	SOIC (D) | 14	-	-	Call TI	Call TI	-40 to 125	AHC74
SN74AHC74DBR	Active	Production	SSOP (DB) | 14	2000 | LARGE T&R	Yes	NIPDAU	Level-1-260C-UNLIM	-40 to 125	HA74
SN74AHC74DBR.A	Active	Production	SSOP (DB) | 14	2000 | LARGE T&R	Yes	NIPDAU	Level-1-260C-UNLIM	-40 to 125	HA74
SN74AHC74DGVR	Active	Production	TVSOP (DGV) | 14	2000 | LARGE T&R	Yes	NIPDAU	Level-1-260C-UNLIM	-40 to 125	HA74
SN74AHC74DGVR.A	Active	Production	TVSOP (DGV) | 14	2000 | LARGE T&R	Yes	NIPDAU	Level-1-260C-UNLIM	-40 to 125	HA74
SN74AHC74DR	Active	Production	SOIC (D) | 14	2500 | LARGE T&R	Yes	NIPDAU | NIPDAU	Level-1-260C-UNLIM	-40 to 125	AHC74
SN74AHC74DR.A	Active	Production	SOIC (D) | 14	2500 | LARGE T&R	Yes	NIPDAU	Level-1-260C-UNLIM	-40 to 125	AHC74
SN74AHC74DRG4.A	Active	Production	SOIC (D) | 14	2500 | LARGE T&R	Yes	NIPDAU	Level-1-260C-UNLIM	-40 to 125	AHC74
SN74AHC74N	Active	Production	PDIP (N) | 14	25 | TUBE	Yes	NIPDAU	N/A for Pkg Type	-40 to 125	SN74AHC74N
SN74AHC74N.A	Active	Production	PDIP (N) | 14	25 | TUBE	Yes	NIPDAU	N/A for Pkg Type	-40 to 125	SN74AHC74N
SN74AHC74NSR	Active	Production	SOP (NS) | 14	2000 | LARGE T&R	Yes	NIPDAU	Level-1-260C-UNLIM	-40 to 125	AHC74
SN74AHC74NSR.A	Active	Production	SOP (NS) | 14	2000 | LARGE T&R	Yes	NIPDAU	Level-1-260C-UNLIM	-40 to 125	AHC74
SN74AHC74PW	Obsolete	Production	TSSOP (PW) | 14	-	-	Call TI	Call TI	-40 to 125	HA74
SN74AHC74PWR	Active	Production	TSSOP (PW) | 14	2000 | LARGE T&R	Yes	NIPDAU | SN	Level-1-260C-UNLIM	-40 to 125	HA74
SN74AHC74PWR.A	Active	Production	TSSOP (PW) | 14	2000 | LARGE T&R	Yes	NIPDAU	Level-1-260C-UNLIM	-40 to 125	HA74
SN74AHC74RGYR	Active	Production	VQFN (RGY) | 14	3000 | LARGE T&R	Yes	NIPDAU	Level-1-260C-UNLIM	-40 to 125	HA74
SN74AHC74RGYR.A	Active	Production	VQFN (RGY) | 14	3000 | LARGE T&R	Yes	NIPDAU	Level-1-260C-UNLIM	-40 to 125	HA74
SN74AHC74RGYRG4	Active	Production	VQFN (RGY) | 14	3000 | LARGE T&R	Yes	NIPDAU	Level-1-260C-UNLIM	-40 to 125	HA74

Orderable part number	Status (1)	Material type (2)	Package | Pins	Package qty | Carrier	RoHS (3)	Lead finish/ Ball material (4)	MSL rating/ Peak reflow (5)	Op temp (°C)	Part marking (6)
SNJ54AHC74FK	Active	Production	LCCC (FK) | 20	55 | TUBE	No	SNPB	N/A for Pkg Type	-55 to 125	5962-9686001Q2A SNJ54AHC 74FK
SNJ54AHC74FK.A	Active	Production	LCCC (FK) | 20	55 | TUBE	No	SNPB	N/A for Pkg Type	-55 to 125	5962-9686001Q2A SNJ54AHC 74FK
SNJ54AHC74J	Active	Production	CDIP (J) | 14	25 | TUBE	No	SNPB	N/A for Pkg Type	-55 to 125	5962-9686001QCA SNJ54AHC74J
SNJ54AHC74J.A	Active	Production	CDIP (J) | 14	25 | TUBE	No	SNPB	N/A for Pkg Type	-55 to 125	5962-9686001QCA SNJ54AHC74J
SNJ54AHC74W	Active	Production	CFP (W) | 14	25 | TUBE	No	SNPB	N/A for Pkg Type	-55 to 125	5962-9686001QDA SNJ54AHC74W
SNJ54AHC74W.A	Active	Production	CFP (W) | 14	25 | TUBE	No	SNPB	N/A for Pkg Type	-55 to 125	5962-9686001QDA SNJ54AHC74W

(1) **Status:** For more details on status, see our product life cycle.

(2) **Material type:** When designated, preproduction parts are prototypes/experimental devices, and are not yet approved or released for full production. Testing and final process, including without limitation quality assurance, reliability performance testing, and/or process qualification, may not yet be complete, and this item is subject to further changes or possible discontinuation. If available for ordering, purchases will be subject to an additional waiver at checkout, and are intended for early internal evaluation purposes only. These items are sold without warranties of any kind.

(3) **RoHS values:** Yes, No, RoHS Exempt. See the TI RoHS Statement for additional information and value definition.

(4) **Lead finish/Ball material:** Parts may have multiple material finish options. Finish options are separated by a vertical ruled line. Lead finish/Ball material values may wrap to two lines if the finish value exceeds the maximum column width.

(5) **MSL rating/Peak reflow:** The moisture sensitivity level ratings and peak solder (reflow) temperatures. In the event that a part has multiple moisture sensitivity ratings, only the lowest level per JEDEC standards is shown. Refer to the shipping label for the actual reflow temperature that will be used to mount the part to the printed circuit board.

(6) **Part marking:** There may be an additional marking, which relates to the logo, the lot trace code information, or the environmental category of the part.

Multiple part markings will be inside parentheses. Only one part marking contained in parentheses and separated by a "~" will appear on a part. If a line is indented then it is a continuation of the previous line and the two combined represent the entire part marking for that device.

Important Information and Disclaimer: The information provided on this page represents TI's knowledge and belief as of the date that it is provided. TI bases its knowledge and belief on information provided by third parties, and makes no representation or warranty as to the accuracy of such information. Efforts are underway to better integrate information from third parties. TI has taken and continues to take reasonable steps to provide representative and accurate information but may not have conducted destructive testing or chemical analysis on incoming materials and chemicals. TI and TI suppliers consider certain information to be proprietary, and thus CAS numbers and other limited information may not be available for release.

In no event shall TI's liability arising out of such information exceed the total purchase price of the TI part(s) at issue in this document sold by TI to Customer on an annual basis.

OTHER QUALIFIED VERSIONS OF SN54AHC74, SN74AHC74 :

- Catalog : SN74AHC74
- Enhanced Product : SN74AHC74-EP, SN74AHC74-EP
- Military : SN54AHC74

NOTE: Qualified Version Definitions:

- Catalog - TI's standard catalog product
- Enhanced Product - Supports Defense, Aerospace and Medical Applications
- Military - QML certified for Military and Defense Applications

TAPE AND REEL INFORMATION

REEL DIMENSIONS

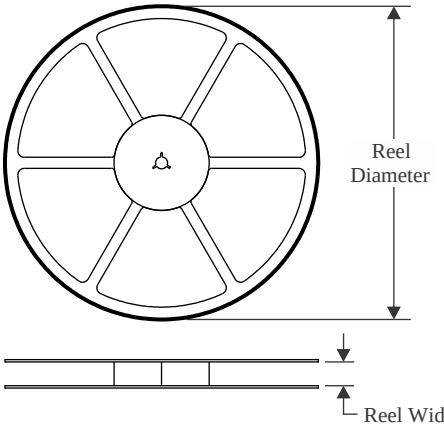

TAPE DIMENSIONS

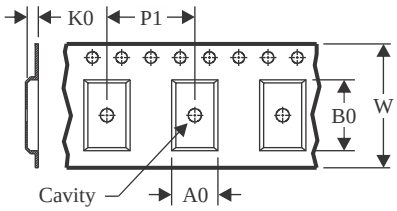

A0	Dimension designed to accommodate the component width
B0	Dimension designed to accommodate the component length
K0	Dimension designed to accommodate the component thickness
W	Overall width of the carrier tape
P1	Pitch between successive cavity centers

QUADRANT ASSIGNMENTS FOR PIN 1 ORIENTATION IN TAPE

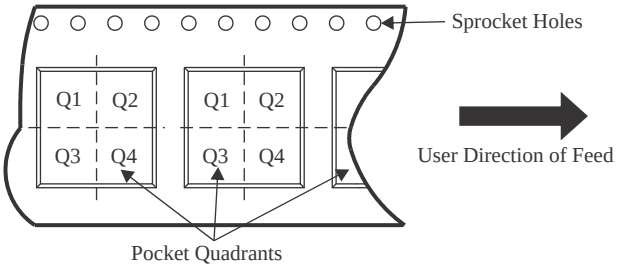

*All dimensions are nominal

Device	Package Type	Package Drawing	Pins	SPQ	Reel Diameter (mm)	Reel Width W1 (mm)	A0 (mm)	B0 (mm)	K0 (mm)	P1 (mm)	W (mm)	Pin1 Quadrant
SN74AHC74BQAR	WQFN	BQA	14	3000	180.0	12.4	2.8	3.3	1.1	4.0	12.0	Q1
SN74AHC74DBR	SSOP	DB	14	2000	330.0	16.4	8.35	6.6	2.4	12.0	16.0	Q1
SN74AHC74DGVR	TVSOP	DGV	14	2000	330.0	12.4	6.8	4.0	1.6	8.0	12.0	Q1
SN74AHC74DR	SOIC	D	14	2500	330.0	16.4	6.5	9.0	2.1	8.0	16.0	Q1
SN74AHC74DR	SOIC	D	14	2500	330.0	16.4	6.5	9.0	2.1	8.0	16.0	Q1
SN74AHC74NSR	SOP	NS	14	2000	330.0	16.4	8.2	10.5	2.5	12.0	16.0	Q1
SN74AHC74PWR	TSSOP	PW	14	2000	330.0	12.4	6.9	5.6	1.6	8.0	12.0	Q1
SN74AHC74PWR	TSSOP	PW	14	2000	330.0	12.4	6.9	5.6	1.6	8.0	12.0	Q1
SN74AHC74RGYR	VQFN	RGY	14	3000	330.0	12.4	3.75	3.75	1.15	8.0	12.0	Q1

TAPE AND REEL BOX DIMENSIONS

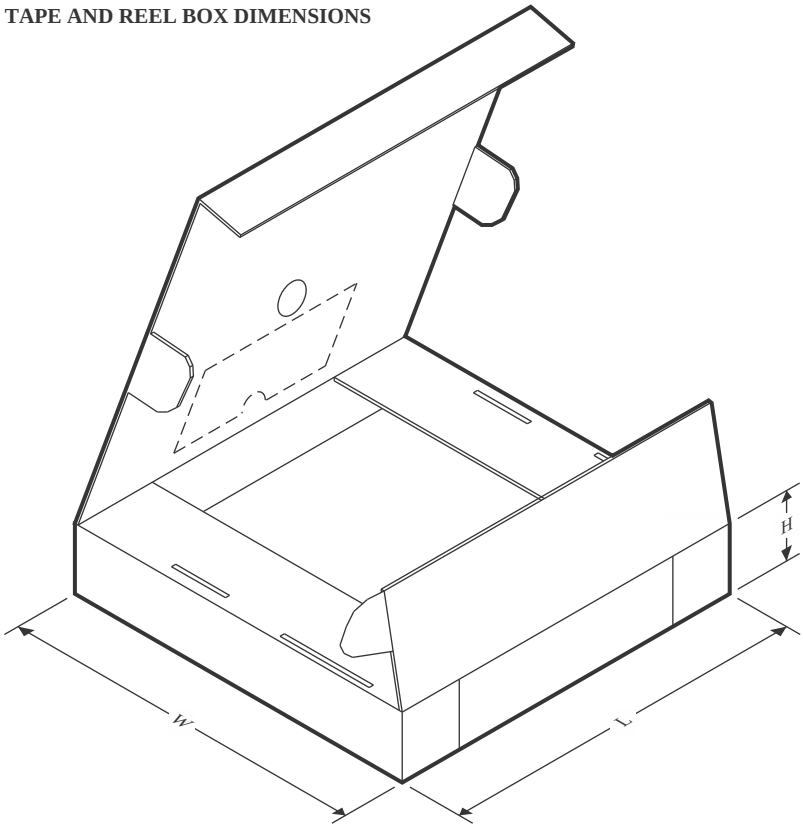

*All dimensions are nominal

Device	Package Type	Package Drawing	Pins	SPQ	Length (mm)	Width (mm)	Height (mm)
SN74AHC74BQAR	WQFN	BQA	14	3000	210.0	185.0	35.0
SN74AHC74DBR	SSOP	DB	14	2000	356.0	356.0	35.0
SN74AHC74DGVR	TVSOP	DGV	14	2000	356.0	356.0	35.0
SN74AHC74DR	SOIC	D	14	2500	353.0	353.0	32.0
SN74AHC74DR	SOIC	D	14	2500	356.0	356.0	35.0
SN74AHC74NSR	SOP	NS	14	2000	356.0	356.0	35.0
SN74AHC74PWR	TSSOP	PW	14	2000	356.0	356.0	35.0
SN74AHC74PWR	TSSOP	PW	14	2000	353.0	353.0	32.0
SN74AHC74RGYR	VQFN	RGY	14	3000	360.0	360.0	36.0

TUBE

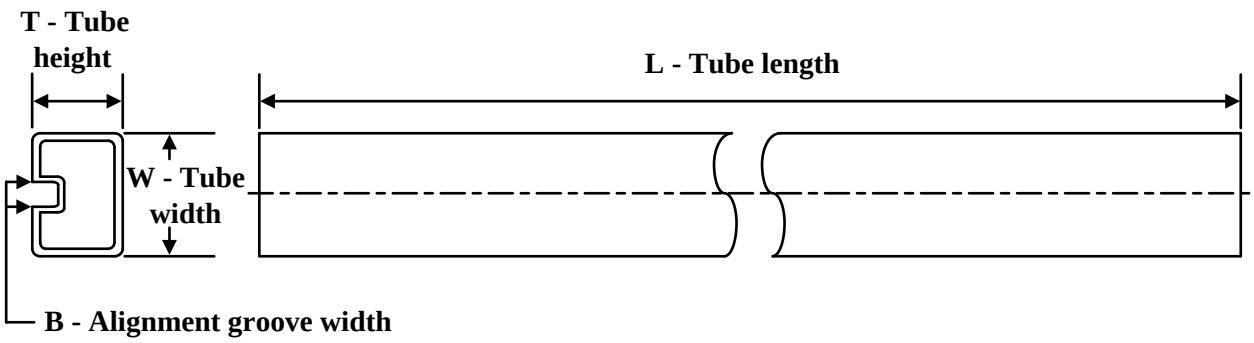

*All dimensions are nominal

Device	Package Name	Package Type	Pins	SPQ	L (mm)	W (mm)	T (µm)	B (mm)
5962-9686001Q2A	FK	LCCC	20	55	506.98	12.06	2030	NA
5962-9686001QDA	W	CFP	14	25	506.98	26.16	6220	NA
SN74AHC74N	N	PDIP	14	25	506	13.97	11230	4.32
SN74AHC74N	N	PDIP	14	25	506	13.97	11230	4.32
SN74AHC74N.A	N	PDIP	14	25	506	13.97	11230	4.32
SN74AHC74N.A	N	PDIP	14	25	506	13.97	11230	4.32
SNJ54AHC74FK	FK	LCCC	20	55	506.98	12.06	2030	NA
SNJ54AHC74FK.A	FK	LCCC	20	55	506.98	12.06	2030	NA
SNJ54AHC74W	W	CFP	14	25	506.98	26.16	6220	NA
SNJ54AHC74W.A	W	CFP	14	25	506.98	26.16	6220	NA

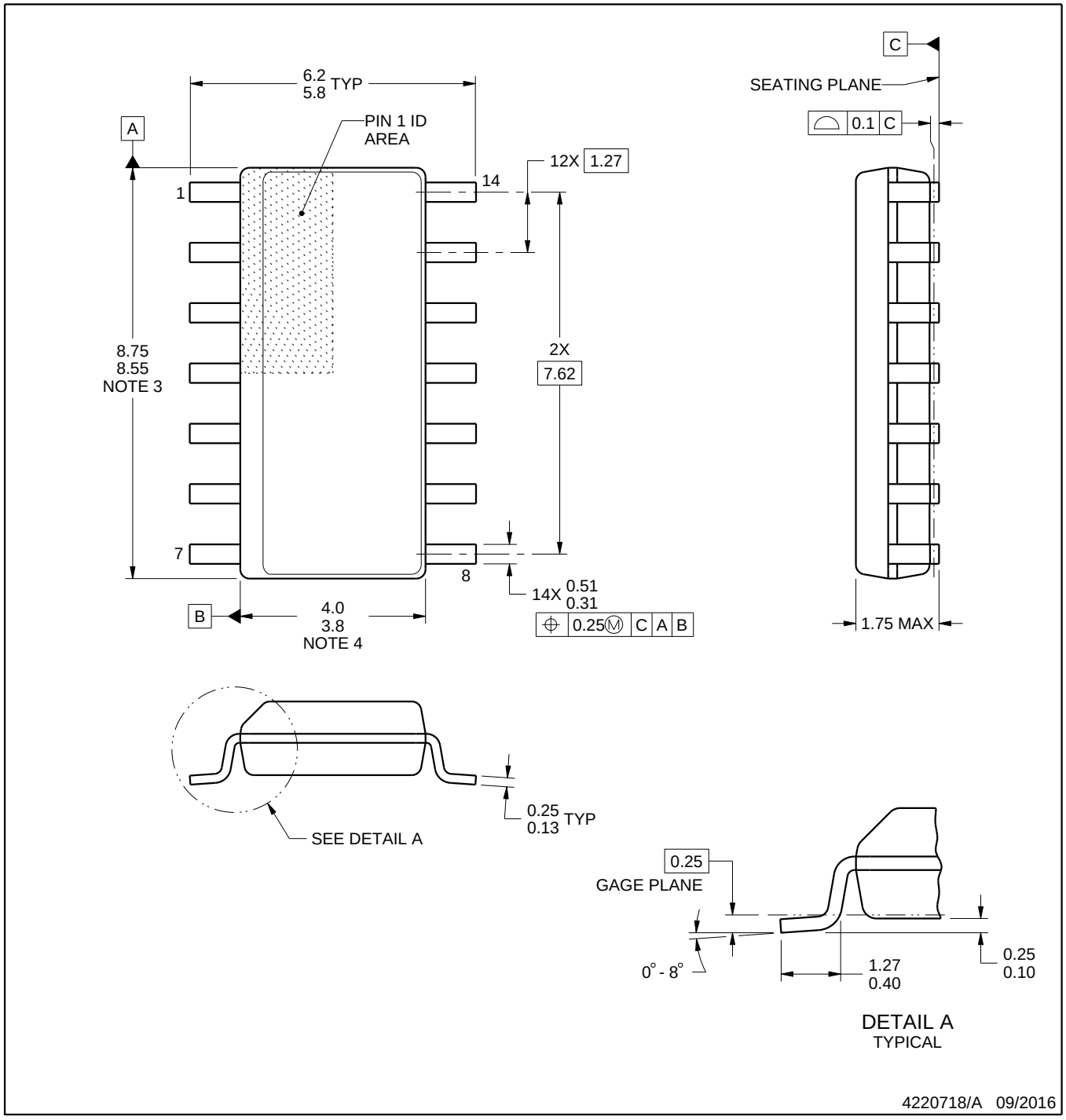

NOTES:

1. All linear dimensions are in millimeters. Dimensions in parenthesis are for reference only. Dimensioning and tolerancing per ASME Y14.5M.
2. This drawing is subject to change without notice.
3. This dimension does not include mold flash, protrusions, or gate burrs. Mold flash, protrusions, or gate burrs shall not exceed 0.15 mm, per side.
4. This dimension does not include interlead flash. Interlead flash shall not exceed 0.43 mm, per side.
5. Reference JEDEC registration MS-012, variation AB.

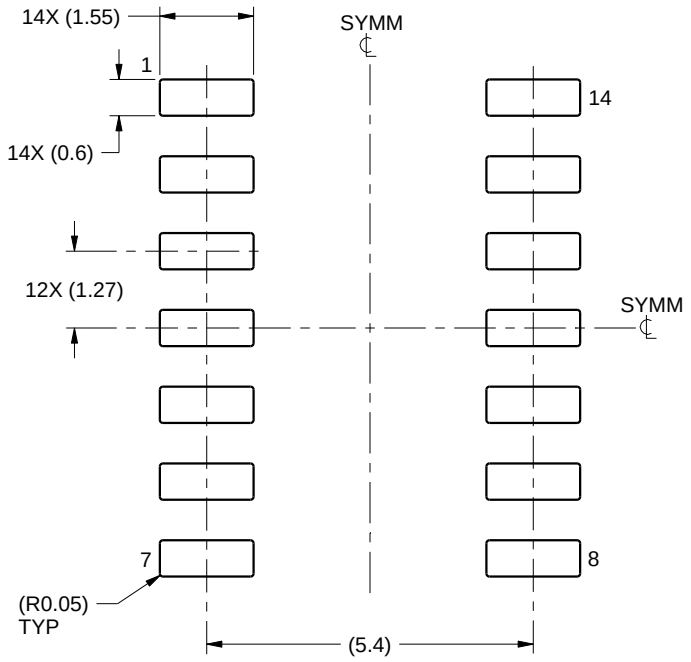

LAND PATTERN EXAMPLE
SCALE:8X

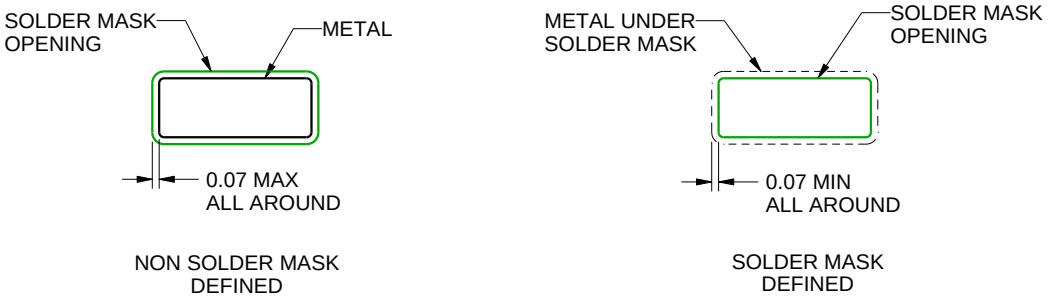

SOLDER MASK DETAILS

4220718/A 09/2016

NOTES: (continued)

6. Publication IPC-7351 may have alternate designs.
7. Solder mask tolerances between and around signal pads can vary based on board fabrication site.

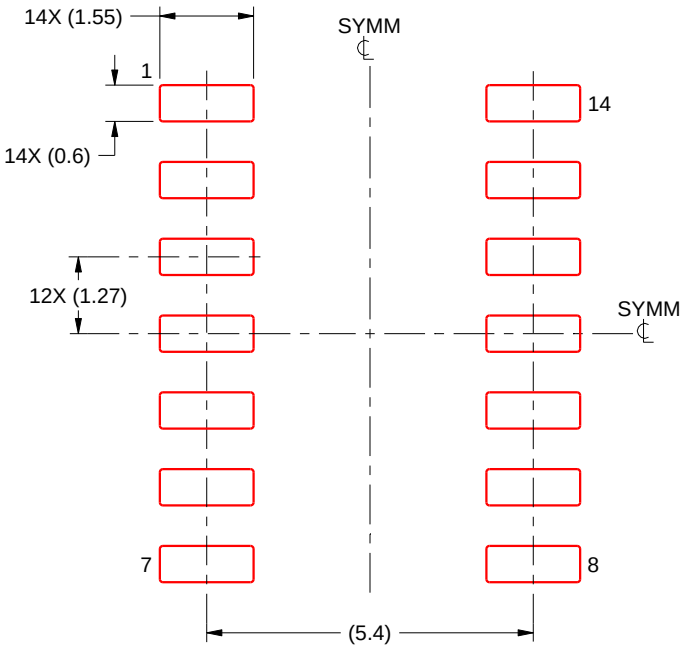

SOLDER PASTE EXAMPLE
BASED ON 0.125 mm THICK STENCIL
SCALE:8X

4220718/A 09/2016

NOTES: (continued)

8. Laser cutting apertures with trapezoidal walls and rounded corners may offer better paste release. IPC-7525 may have alternate design recommendations.
9. Board assembly site may have different recommendations for stencil design.

GENERIC PACKAGE VIEW

BQA 14

WQFN - 0.8 mm max height

2.5 x 3, 0.5 mm pitch

PLASTIC QUAD FLATPACK - NO LEAD

This image is a representation of the package family, actual package may vary.
Refer to the product data sheet for package details.

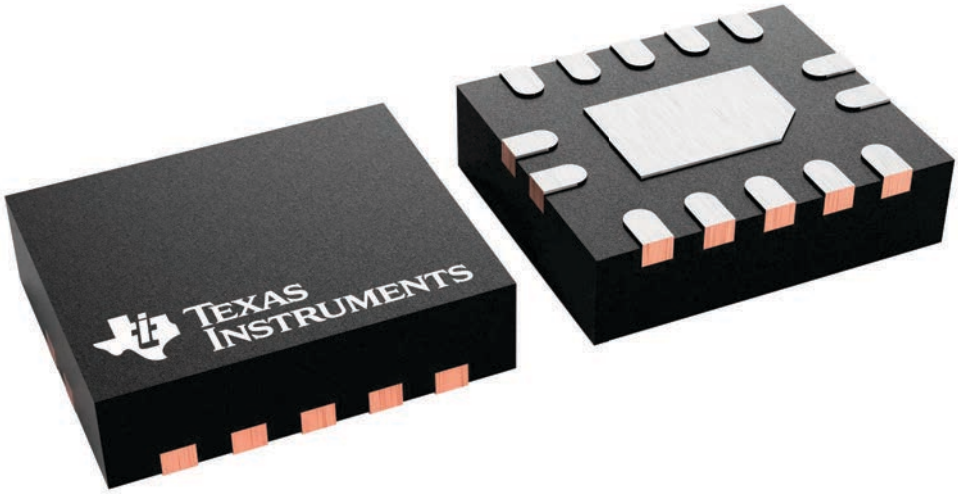

4227145/A

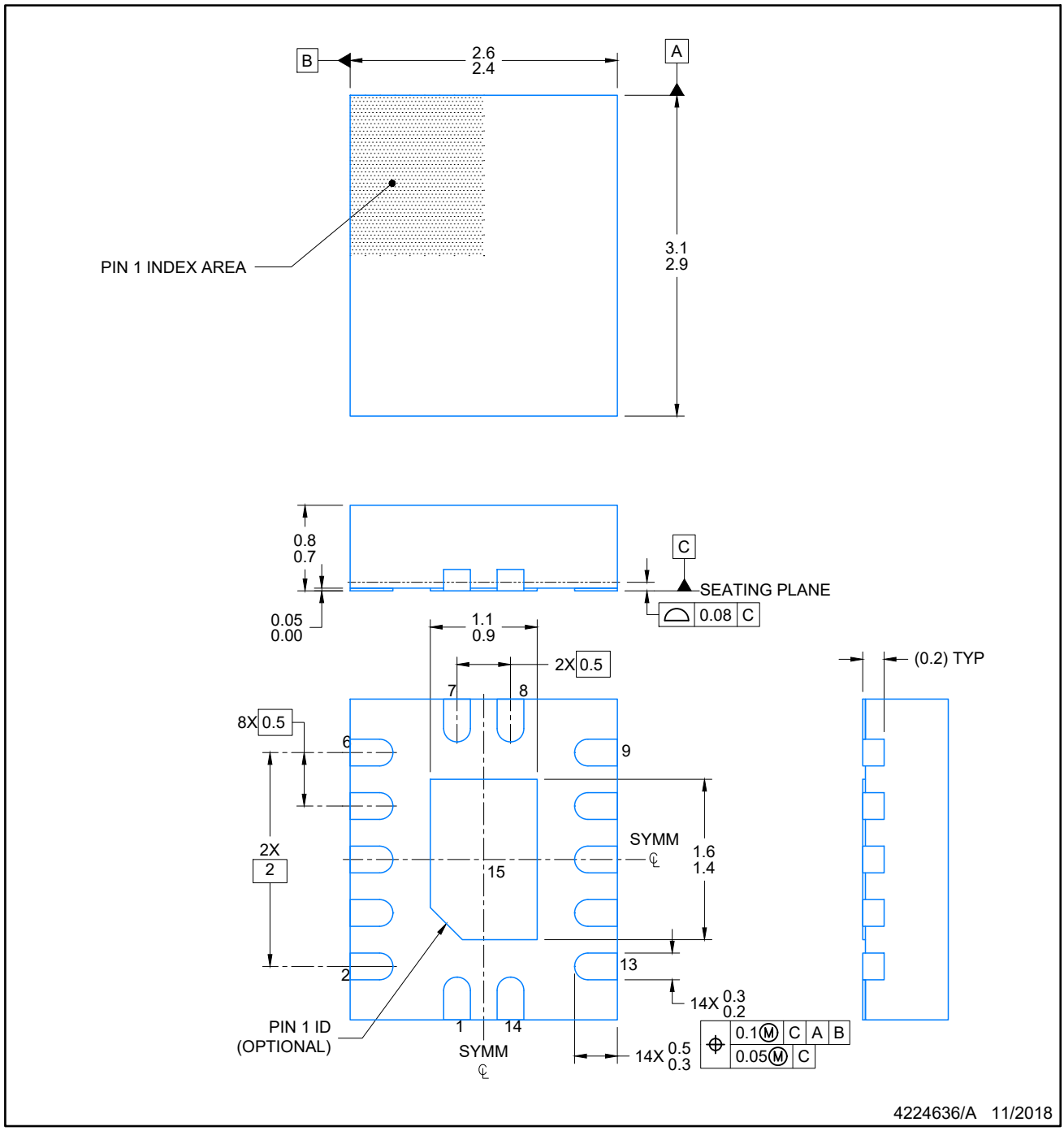

NOTES:

1. All linear dimensions are in millimeters. Any dimensions in parenthesis are for reference only. Dimensioning and tolerancing per ASME Y14.5M.
2. This drawing is subject to change without notice.
3. The package thermal pad must be soldered to the printed circuit board for optimal thermal and mechanical performance.

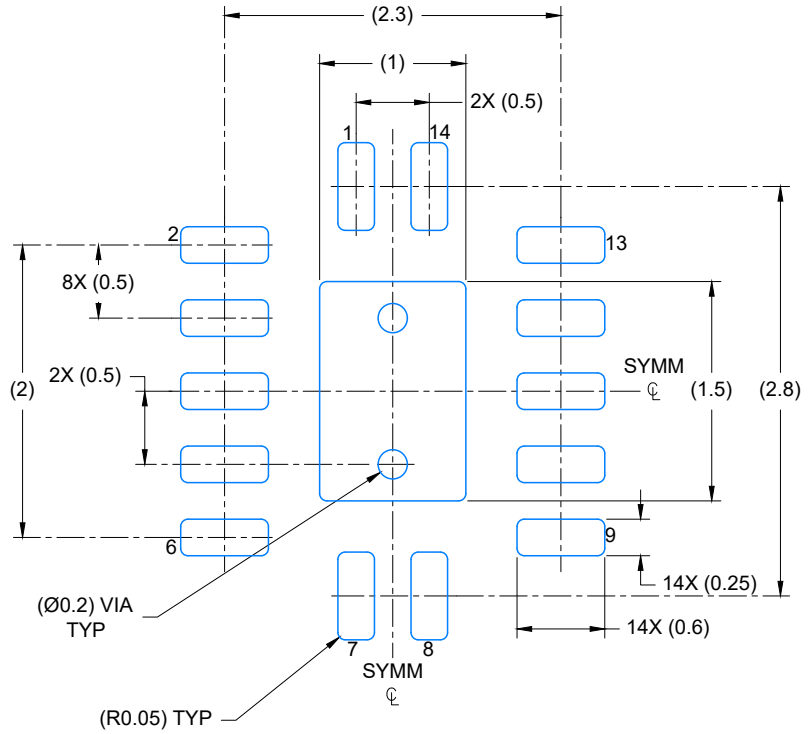

LAND PATTERN EXAMPLE
EXPOSED METAL SHOWN
SCALE: 20X

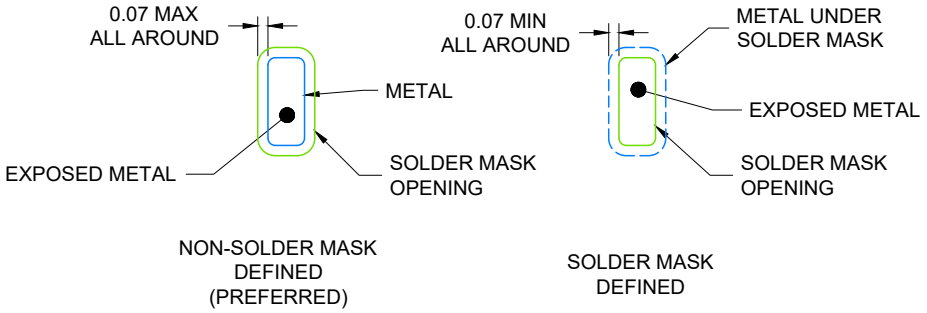

4224636/A 11/2018

NOTES: (continued)

4. This package is designed to be soldered to a thermal pad on the board. For more information, see Texas Instruments literature number SLUA271 (www.ti.com/lit/slua271).
5. Vias are optional depending on application, refer to device data sheet. If any vias are implemented, refer to their locations shown on this view. It is recommended that vias under paste be filled, plugged or tented.

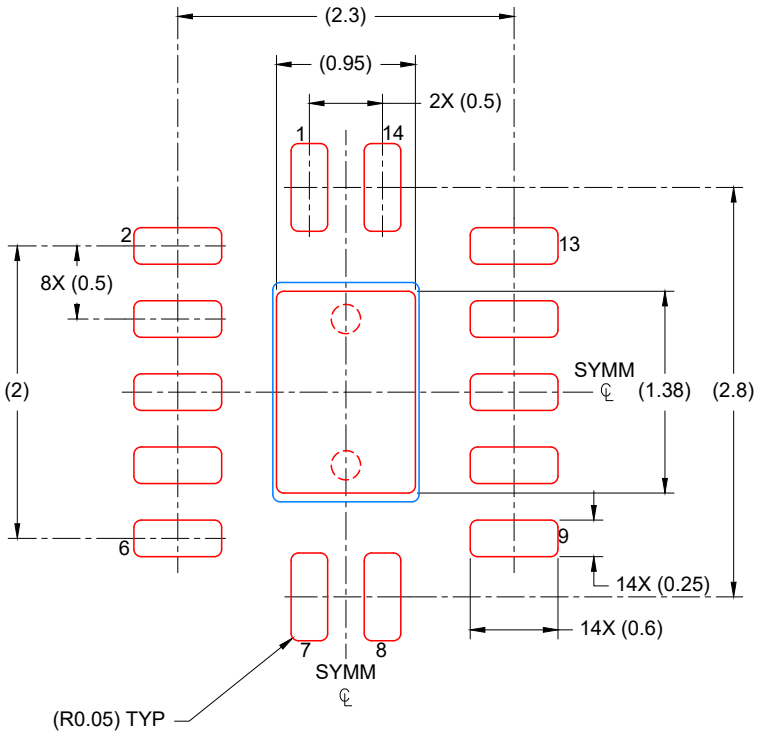

SOLDER PASTE EXAMPLE
BASED ON 0.125 mm THICK STENCIL

EXPOSED PAD
88% PRINTED COVERAGE BY AREA
SCALE: 20X

4224636/A 11/2018

NOTES: (continued)

6. Laser cutting apertures with trapezoidal walls and rounded corners may offer better paste release. IPC-7525 may have alternate design recommendations.

MECHANICAL DATA

NS (R-PDSO-G)** **PLASTIC SMALL-OUTLINE PACKAGE**

14-PINS SHOWN

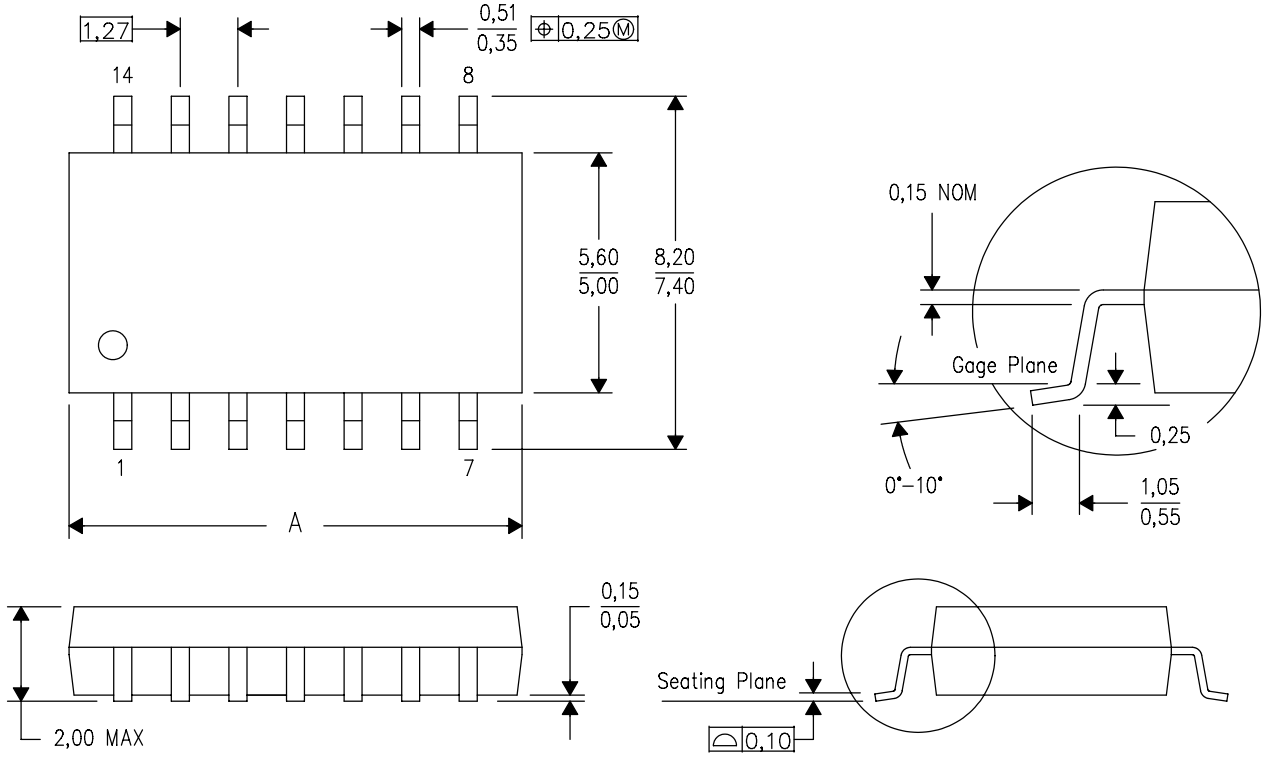

DIM \ PINS **	14	16	20	24
A MAX	10,50	10,50	12,90	15,30
A MIN	9,90	9,90	12,30	14,70

4040062/C 03/03

NOTES:
A. All linear dimensions are in millimeters.
B. This drawing is subject to change without notice.
C. Body dimensions do not include mold flash or protrusion, not to exceed 0,15.

W (R–GDFP–F14) CERAMIC DUAL FLATPACK

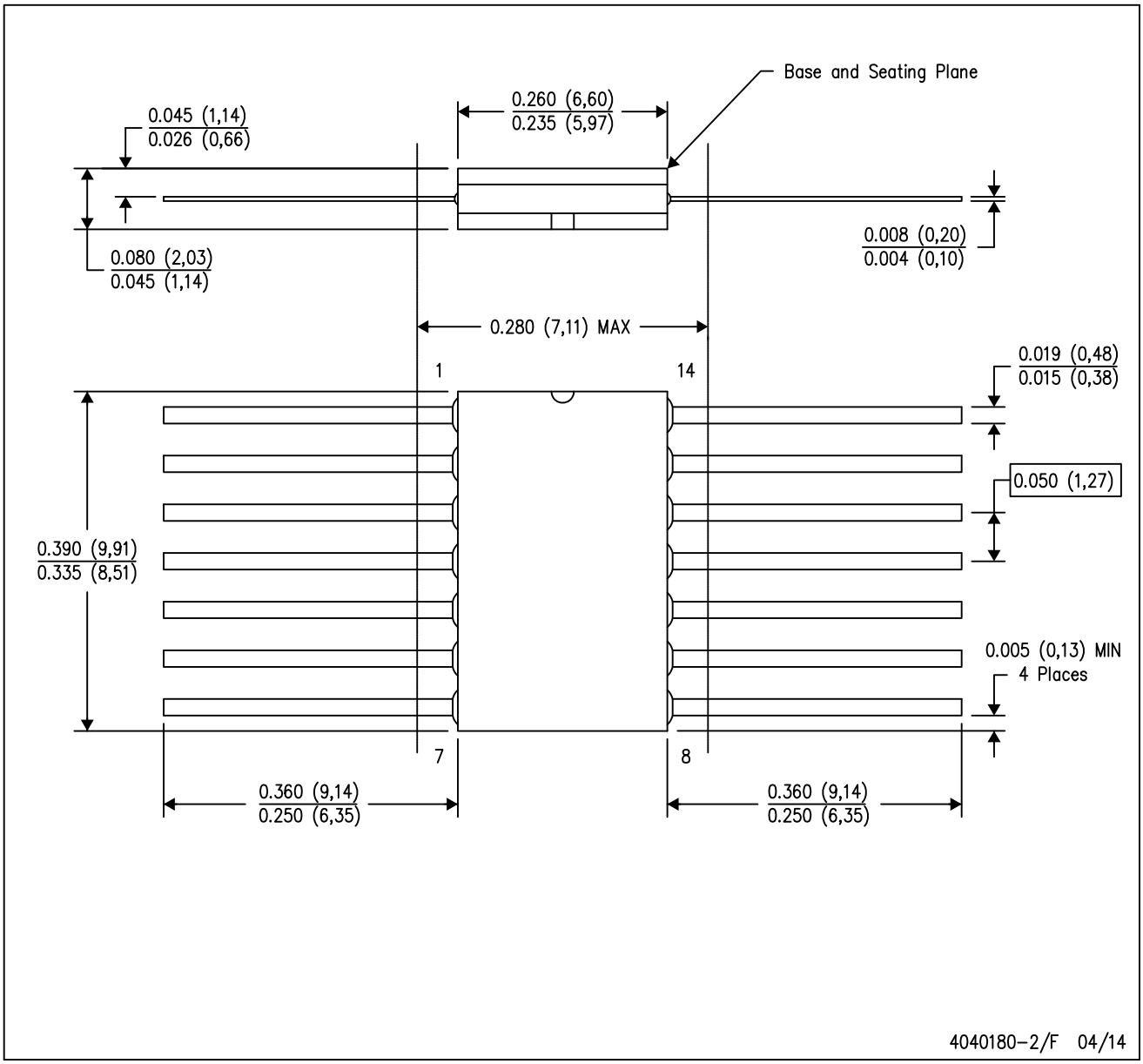

NOTES:
A. All linear dimensions are in inches (millimeters).
B. This drawing is subject to change without notice.
C. This package can be hermetically sealed with a ceramic lid using glass frit.
D. Index point is provided on cap for terminal identification only.
E. Falls within MIL STD 1835 GDFP1–F14

DGV (R-PDSO-G)** **PLASTIC SMALL-OUTLINE**

24 PINS SHOWN

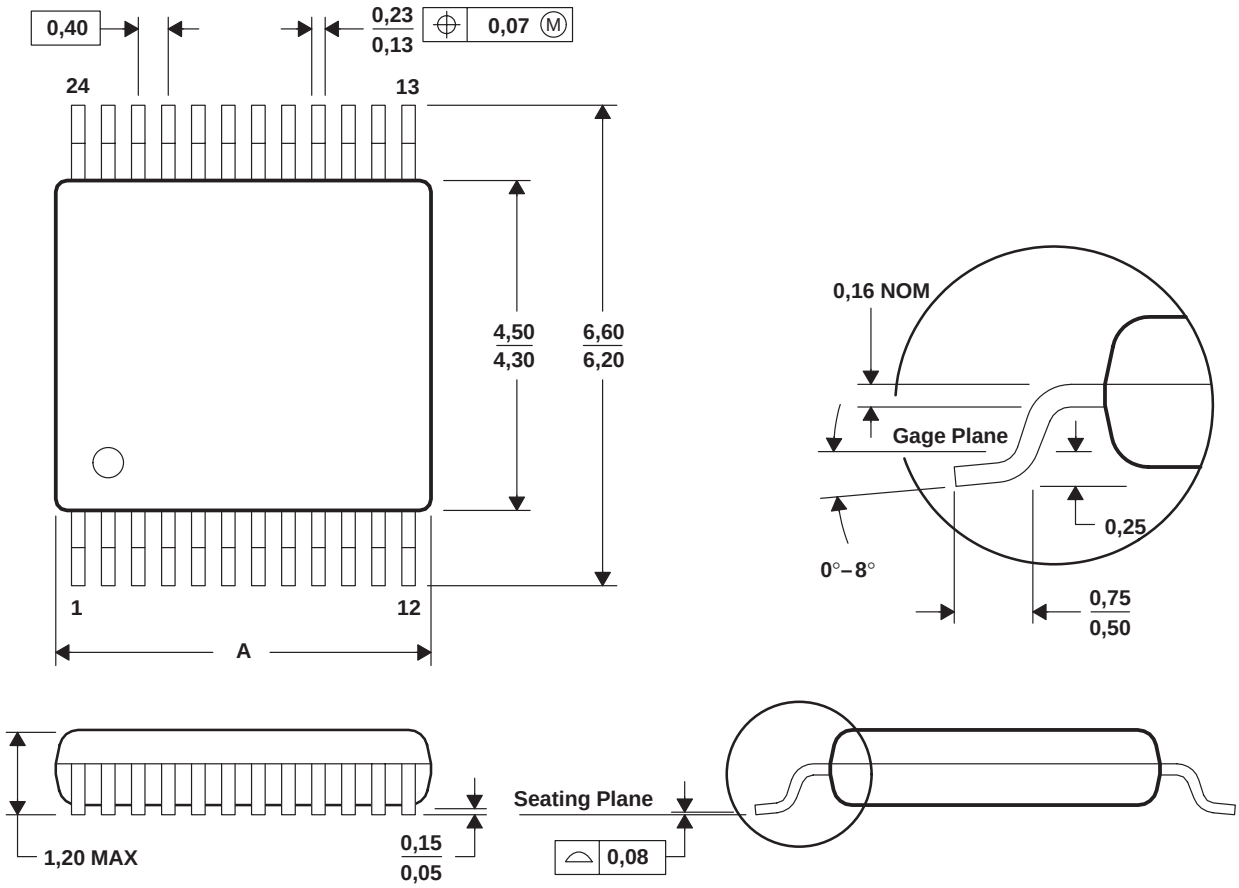

DIM \ PINS **	14	16	20	24	38	48	56
A MAX	3,70	3,70	5,10	5,10	7,90	9,80	11,40
A MIN	3,50	3,50	4,90	4,90	7,70	9,60	11,20

4073251/E 08/00

NOTES: A. All linear dimensions are in millimeters.
B. This drawing is subject to change without notice.
C. Body dimensions do not include mold flash or protrusion, not to exceed 0,15 per side.
D. Falls within JEDEC: 24/48 Pins – MO-153
14/16/20/56 Pins – MO-194

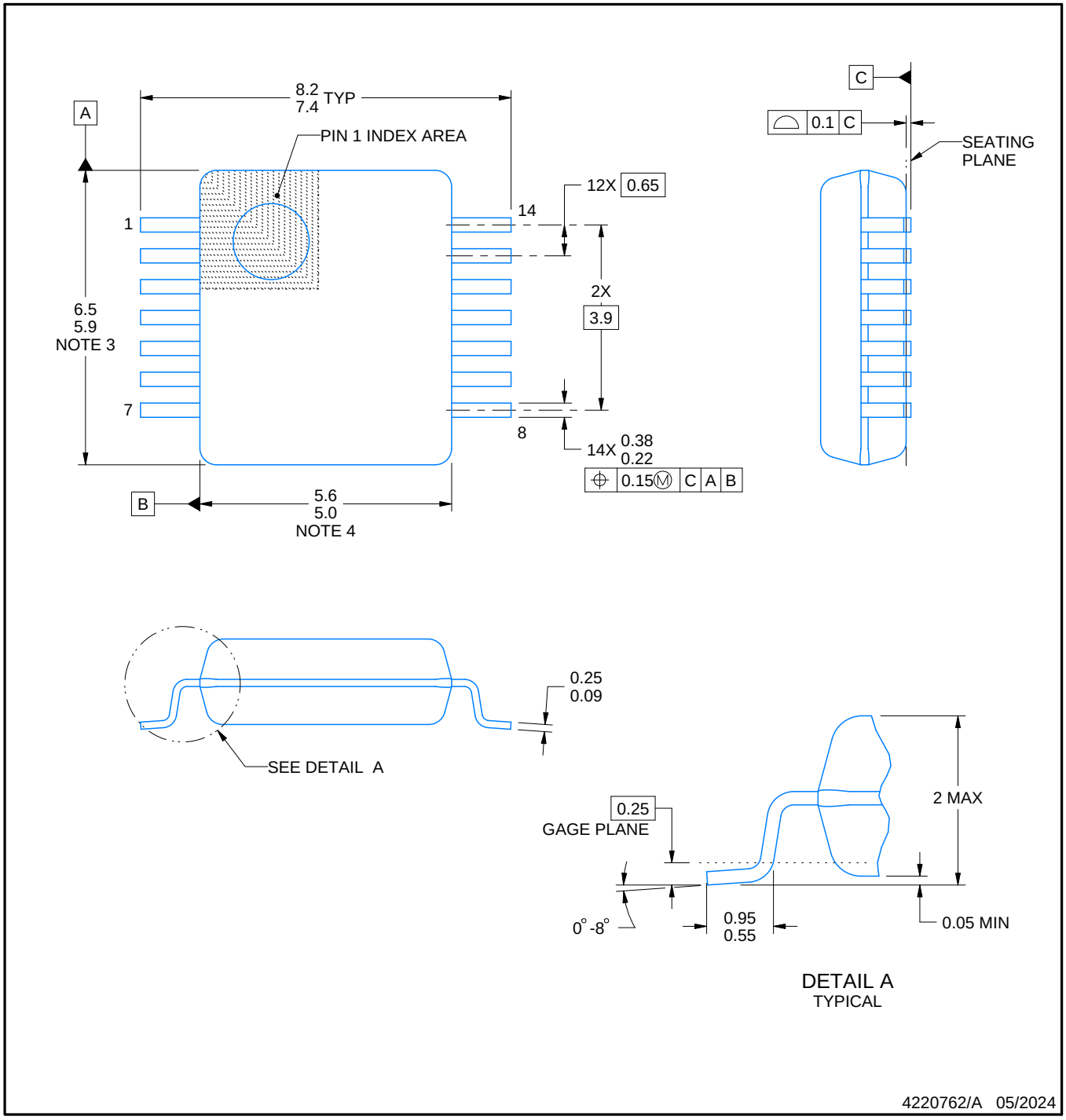

NOTES:

1. All linear dimensions are in millimeters. Any dimensions in parenthesis are for reference only. Dimensioning and tolerancing per ASME Y14.5M.
2. This drawing is subject to change without notice.
3. This dimension does not include mold flash, protrusions, or gate burrs. Mold flash, protrusions, or gate burrs shall not exceed 0.15 mm per side.
4. Reference JEDEC registration MO-150.

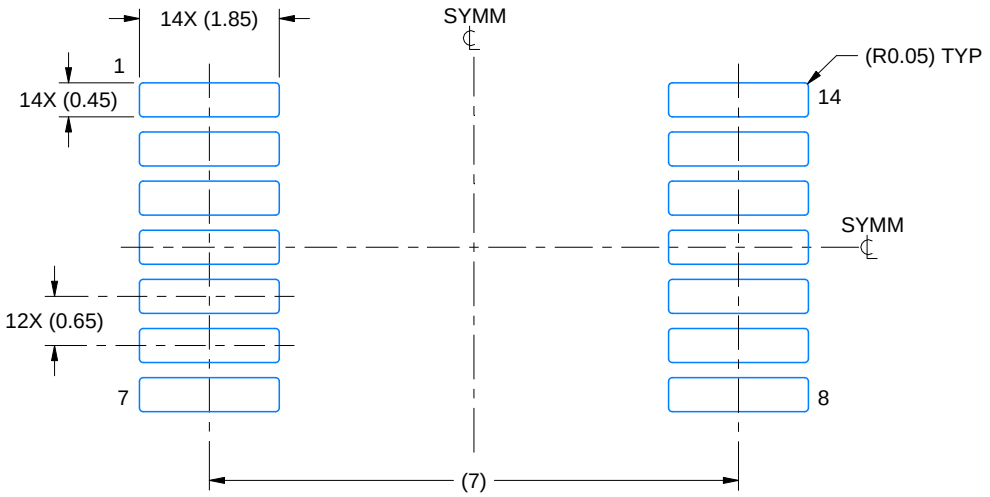

LAND PATTERN EXAMPLE
EXPOSED METAL SHOWN
SCALE: 10X

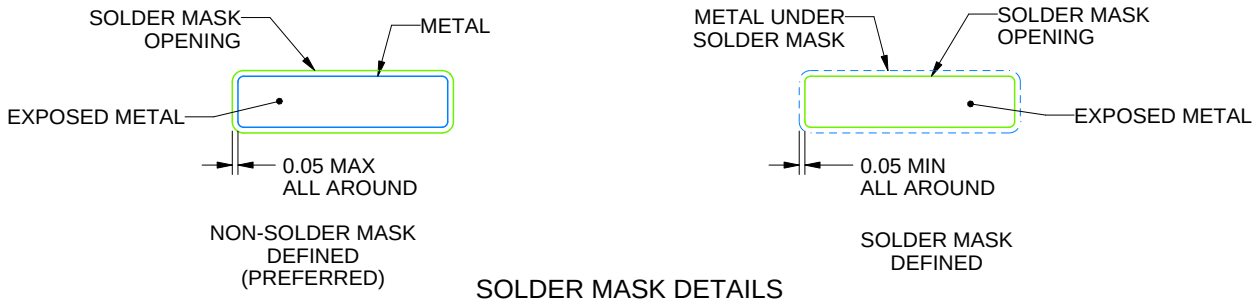

SOLDER MASK DETAILS

4220762/A 05/2024

NOTES: (continued)

5. Publication IPC-7351 may have alternate designs.
6. Solder mask tolerances between and around signal pads can vary based on board fabrication site.

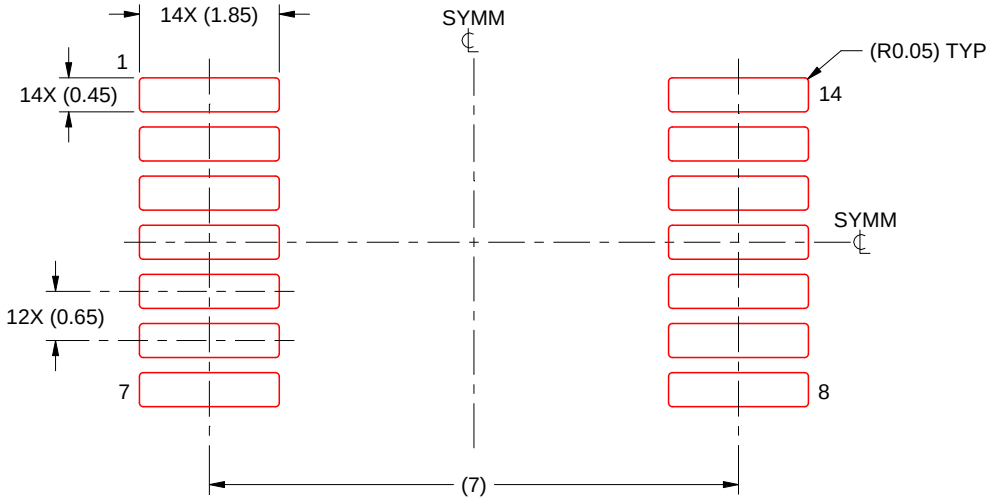

SOLDER PASTE EXAMPLE
BASED ON 0.125 mm THICK STENCIL
SCALE: 10X

4220762/A 05/2024

NOTES: (continued)

7. Laser cutting apertures with trapezoidal walls and rounded corners may offer better paste release. IPC-7525 may have alternate design recommendations.
8. Board assembly site may have different recommendations for stencil design.

GENERIC PACKAGE VIEW

FK 20

LCCC - 2.03 mm max height

8.89 x 8.89, 1.27 mm pitch

LEADLESS CERAMIC CHIP CARRIER

This image is a representation of the package family, actual package may vary.
Refer to the product data sheet for package details.

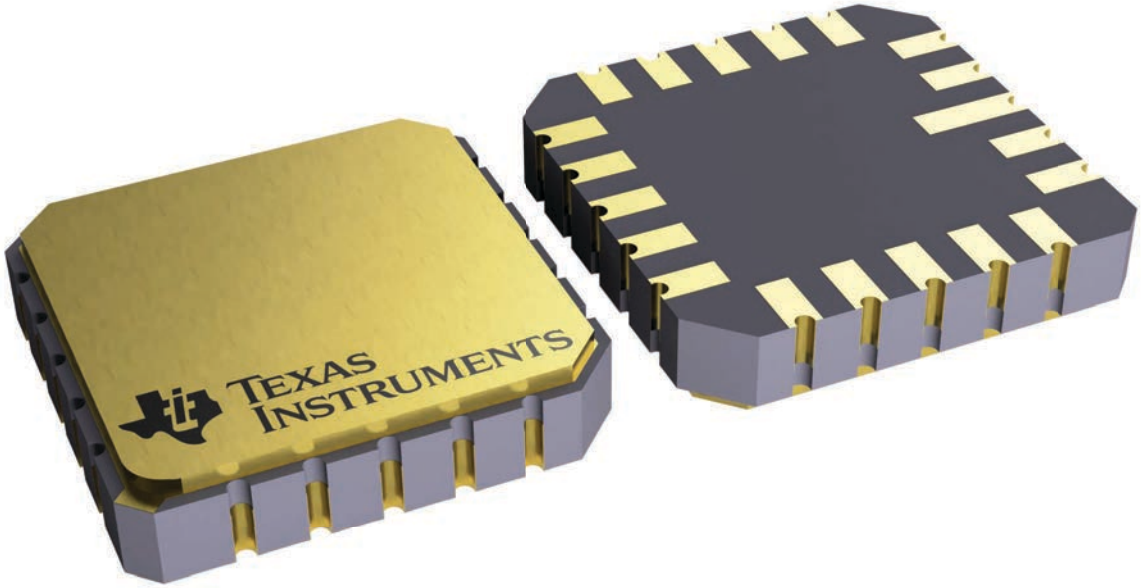

4229370VA\

J 14 CDIP - 5.08 mm max height

CERAMIC DUAL IN LINE PACKAGE

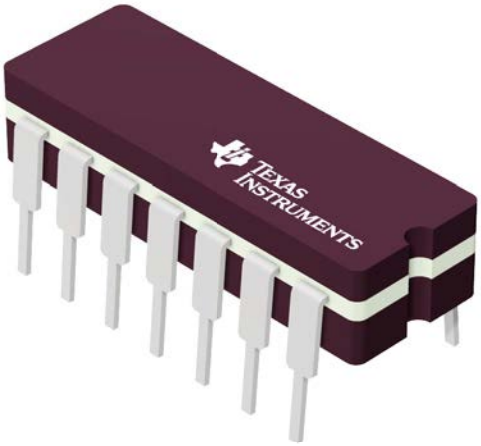

Images above are just a representation of the package family, actual package may vary.
Refer to the product data sheet for package details.

4040083-5/G

PACKAGE OUTLINE

J0014A

CDIP - 5.08 mm max height

CERAMIC DUAL IN LINE PACKAGE

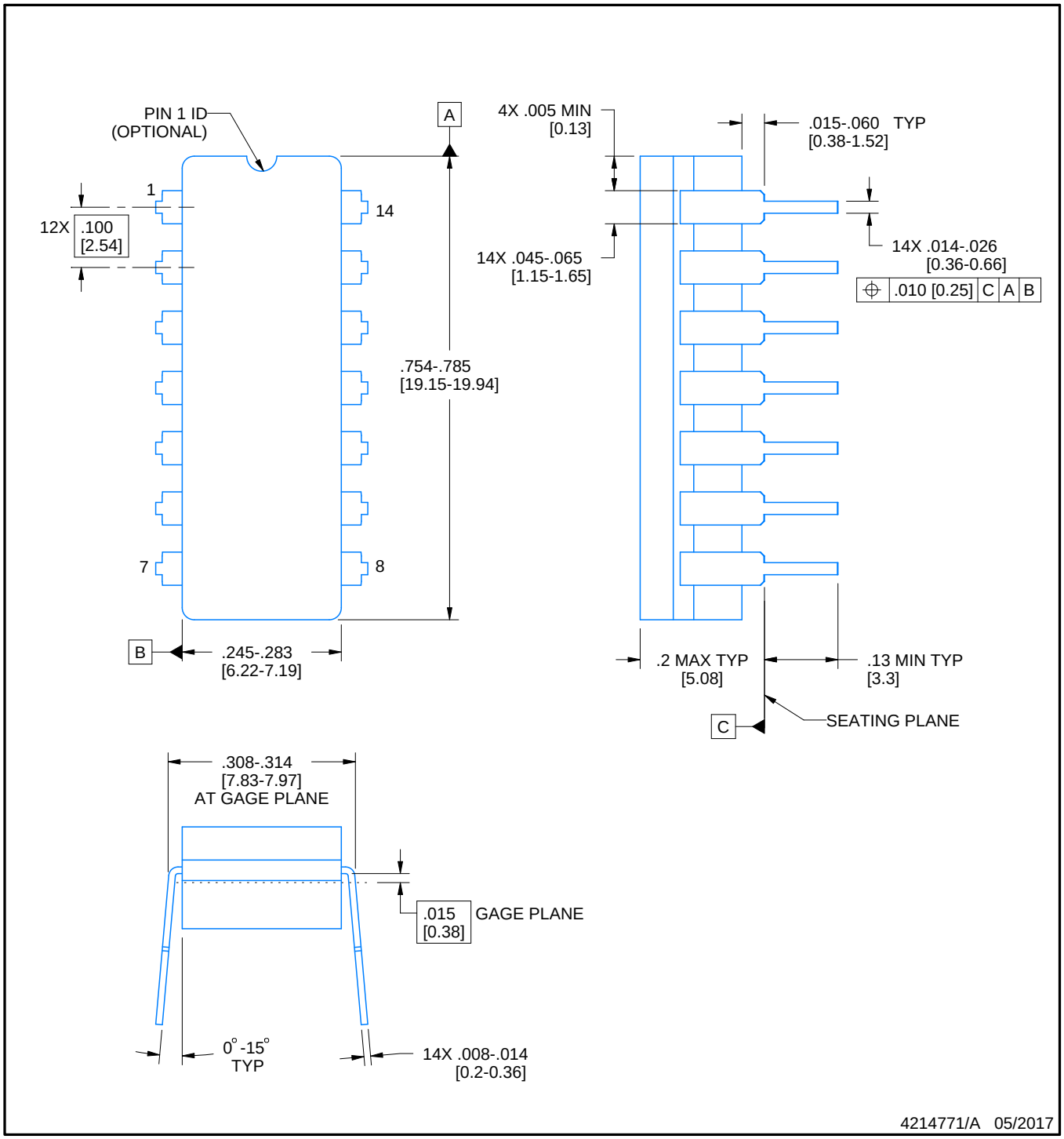

NOTES:

1. All controlling linear dimensions are in inches. Dimensions in brackets are in millimeters. Any dimension in brackets or parenthesis are for reference only. Dimensioning and tolerancing per ASME Y14.5M.
2. This drawing is subject to change without notice.
3. This package is hermitically sealed with a ceramic lid using glass frit.
4. Index point is provided on cap for terminal identification only and on press ceramic glass frit seal only.
5. Falls within MIL-STD-1835 and GDIP1-T14.

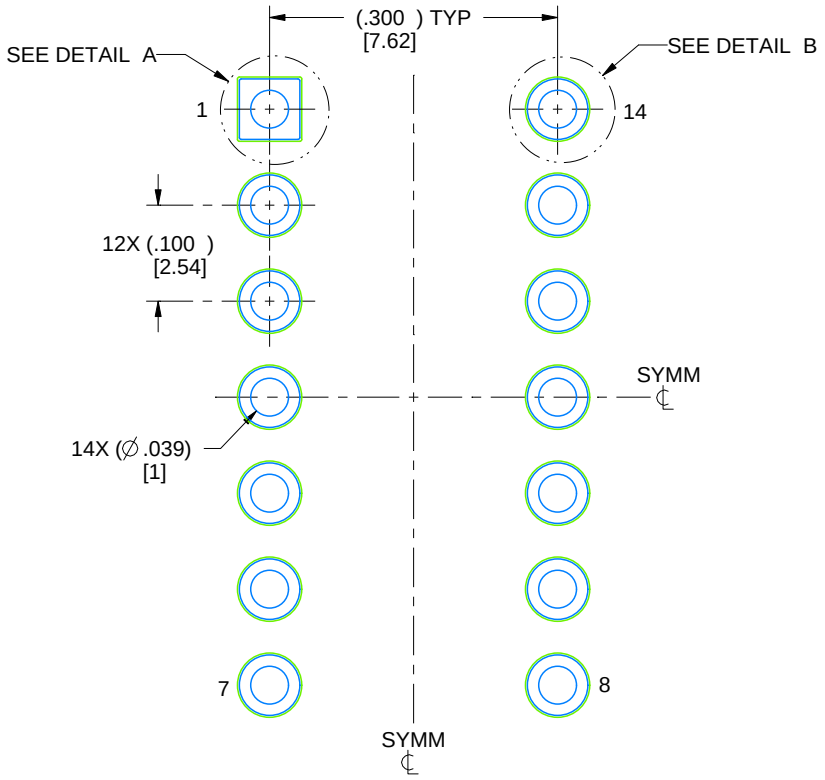

LAND PATTERN EXAMPLE
NON-SOLDER MASK DEFINED
SCALE: 5X

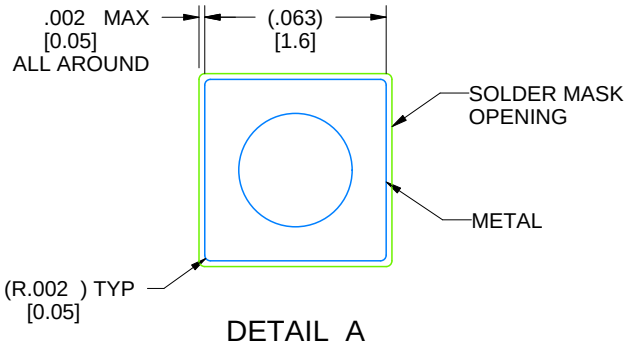

DETAIL A
SCALE: 15X

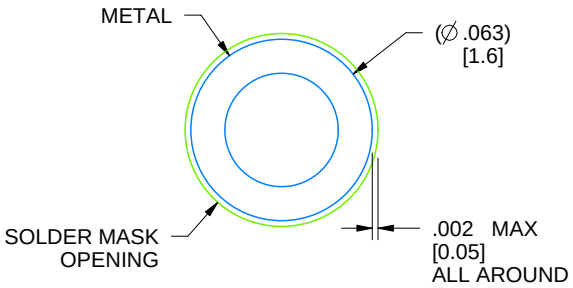

DETAIL B
13X, SCALE: 15X

4214771/A 05/2017

N (R–PDIP–T**) PLASTIC DUAL–IN–LINE PACKAGE

16 PINS SHOWN

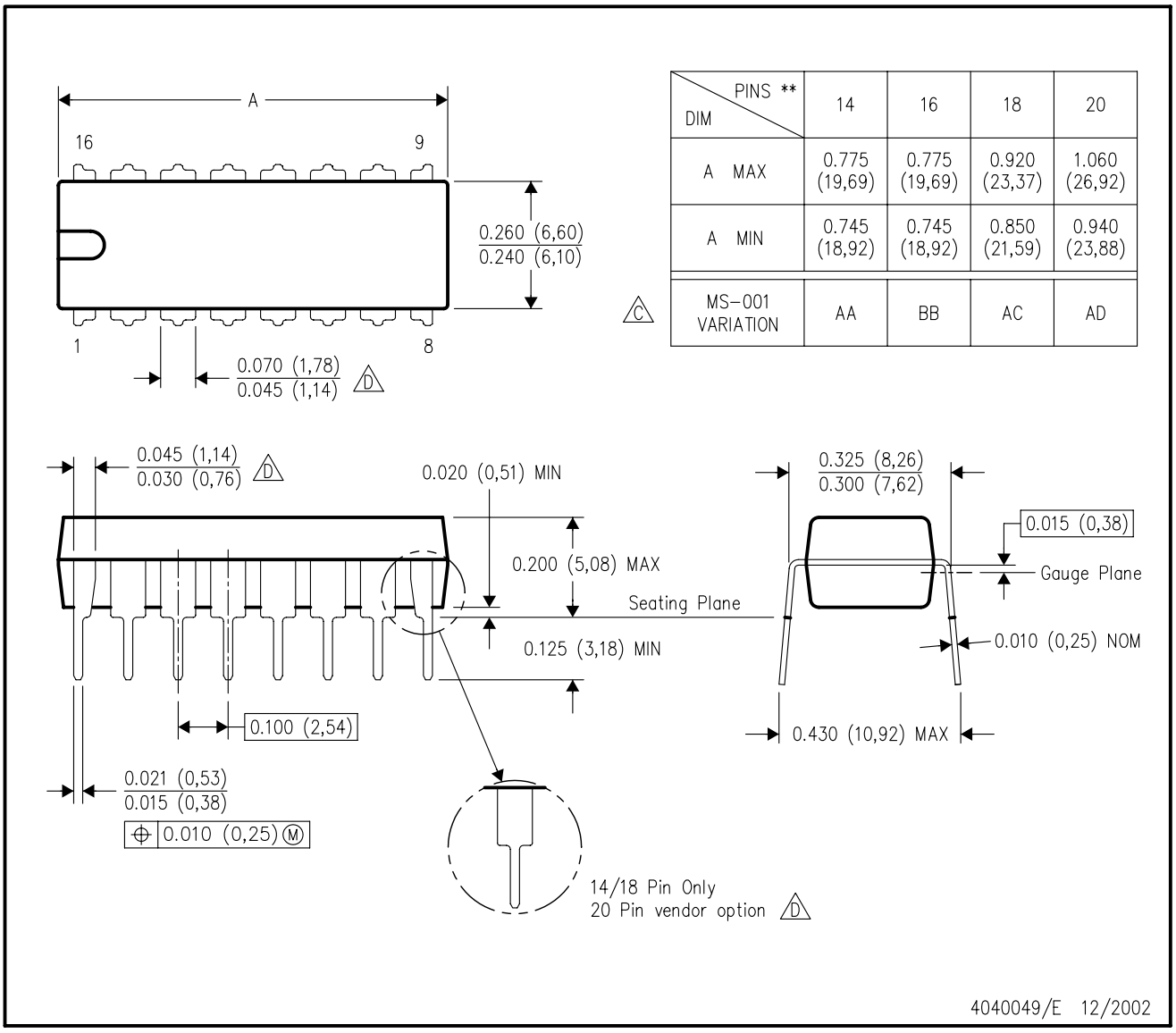

DIM \ PINS **	14	16	18	20
A MAX	0.775 (19,69)	0.775 (19,69)	0.920 (23,37)	1.060 (26,92)
A MIN	0.745 (18,92)	0.745 (18,92)	0.850 (21,59)	0.940 (23,88)
MS–001 VARIATION (C)	AA	BB	AC	AD

NOTES:
A. All linear dimensions are in inches (millimeters).
B. This drawing is subject to change without notice.
C. Falls within JEDEC MS–001, except 18 and 20 pin minimum body length (Dim A).
D. The 20 pin end lead shoulder width is a vendor option, either half or full width.

PW0014A

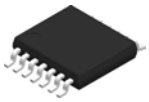

PACKAGE OUTLINE

TSSOP - 1.2 mm max height

SMALL OUTLINE PACKAGE

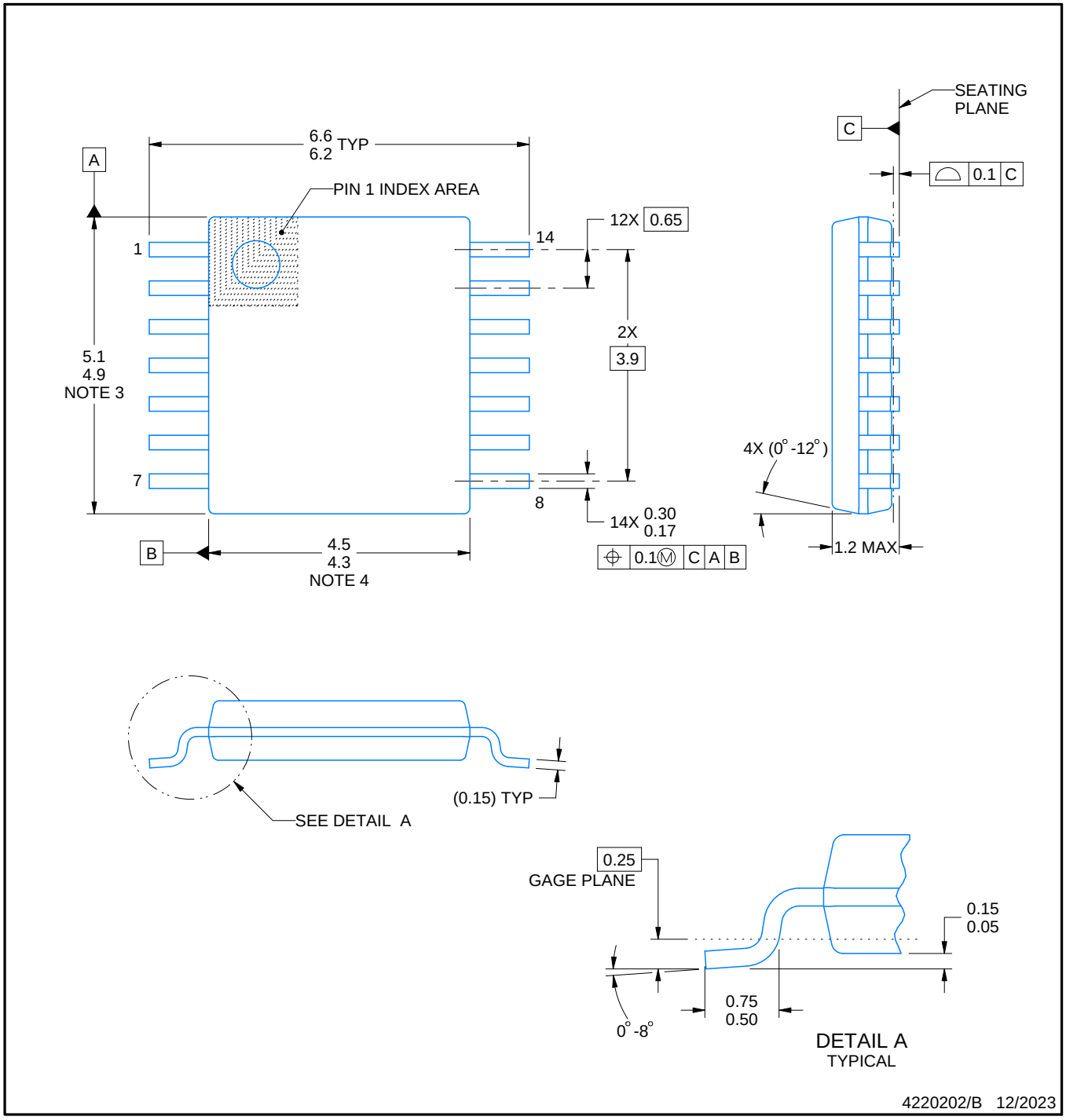

NOTES:

1. All linear dimensions are in millimeters. Any dimensions in parenthesis are for reference only. Dimensioning and tolerancing per ASME Y14.5M.
2. This drawing is subject to change without notice.
3. This dimension does not include mold flash, protrusions, or gate burrs. Mold flash, protrusions, or gate burrs shall not exceed 0.15 mm per side.
4. This dimension does not include interlead flash. Interlead flash shall not exceed 0.25 mm per side.
5. Reference JEDEC registration MO-153.

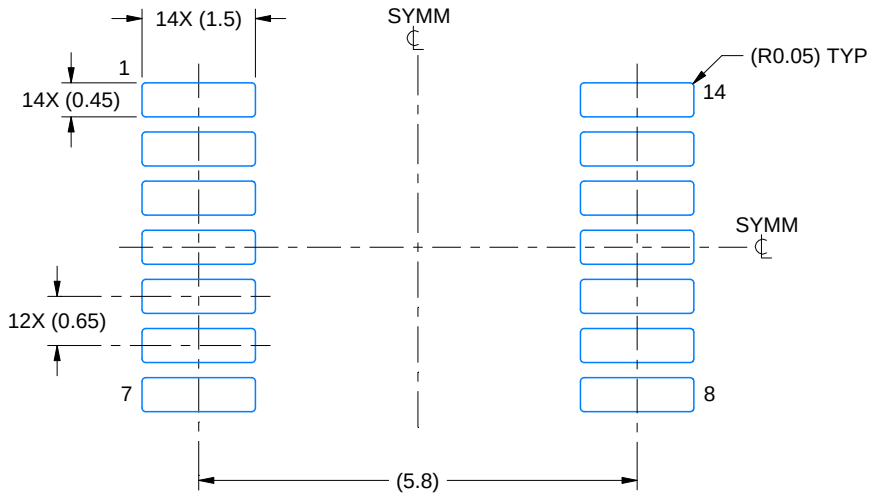

LAND PATTERN EXAMPLE
EXPOSED METAL SHOWN
SCALE: 10X

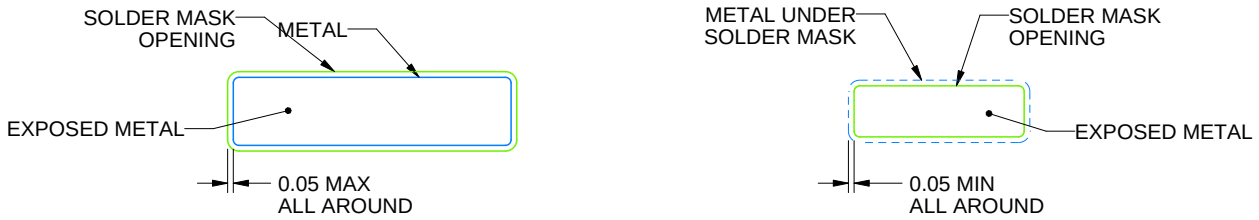

NON-SOLDER MASK DEFINED (PREFERRED)

SOLDER MASK DEFINED

SOLDER MASK DETAILS

4220202/B 12/2023

NOTES: (continued)

6. Publication IPC-7351 may have alternate designs.
7. Solder mask tolerances between and around signal pads can vary based on board fabrication site.

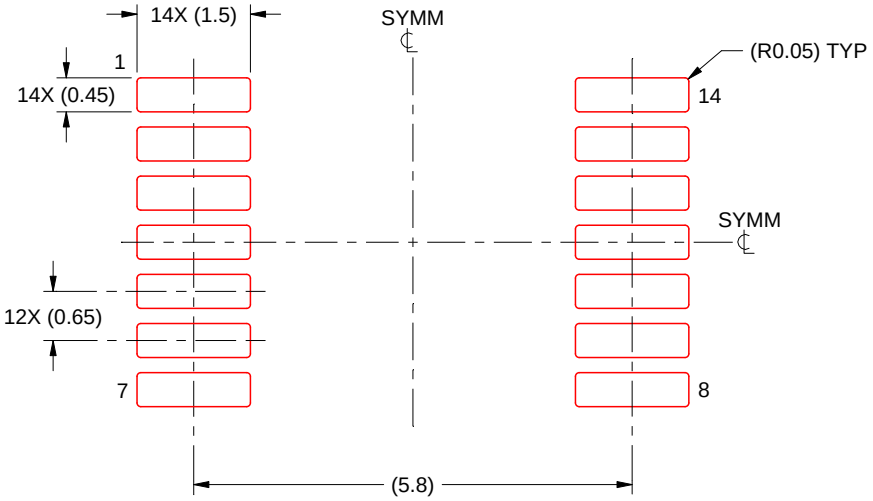

SOLDER PASTE EXAMPLE
BASED ON 0.125 mm THICK STENCIL
SCALE: 10X

4220202/B 12/2023

NOTES: (continued)

8. Laser cutting apertures with trapezoidal walls and rounded corners may offer better paste release. IPC-7525 may have alternate design recommendations.
9. Board assembly site may have different recommendations for stencil design.

GENERIC PACKAGE VIEW

RGY 14

VQFN - 1 mm max height

3.5 x 3.5, 0.5 mm pitch

PLASTIC QUAD FLATPACK - NO LEAD

This image is a representation of the package family, actual package may vary.
Refer to the product data sheet for package details.

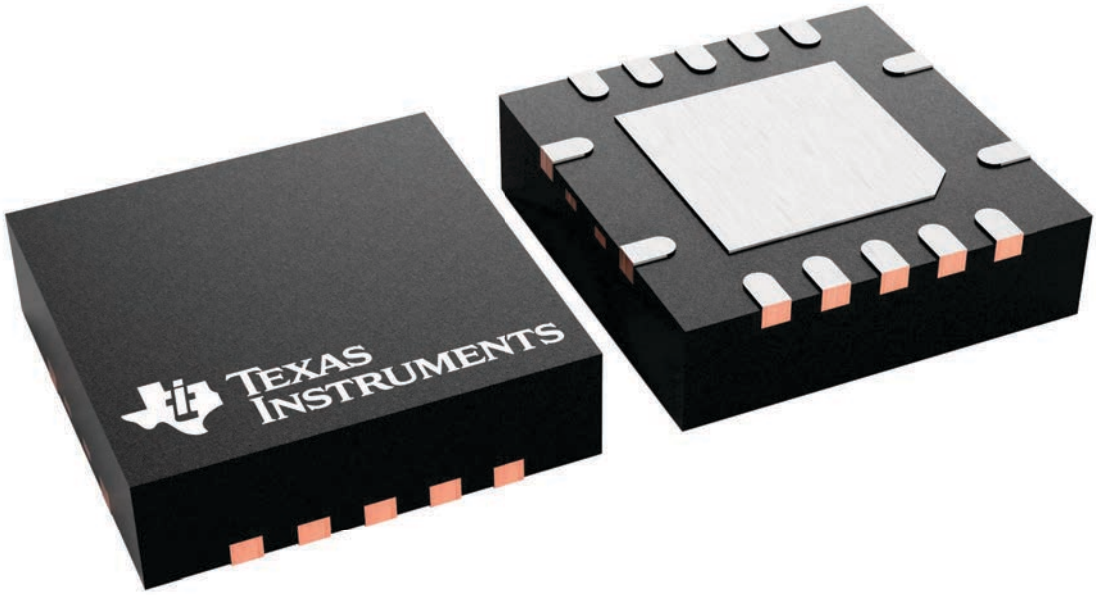

4231541/A

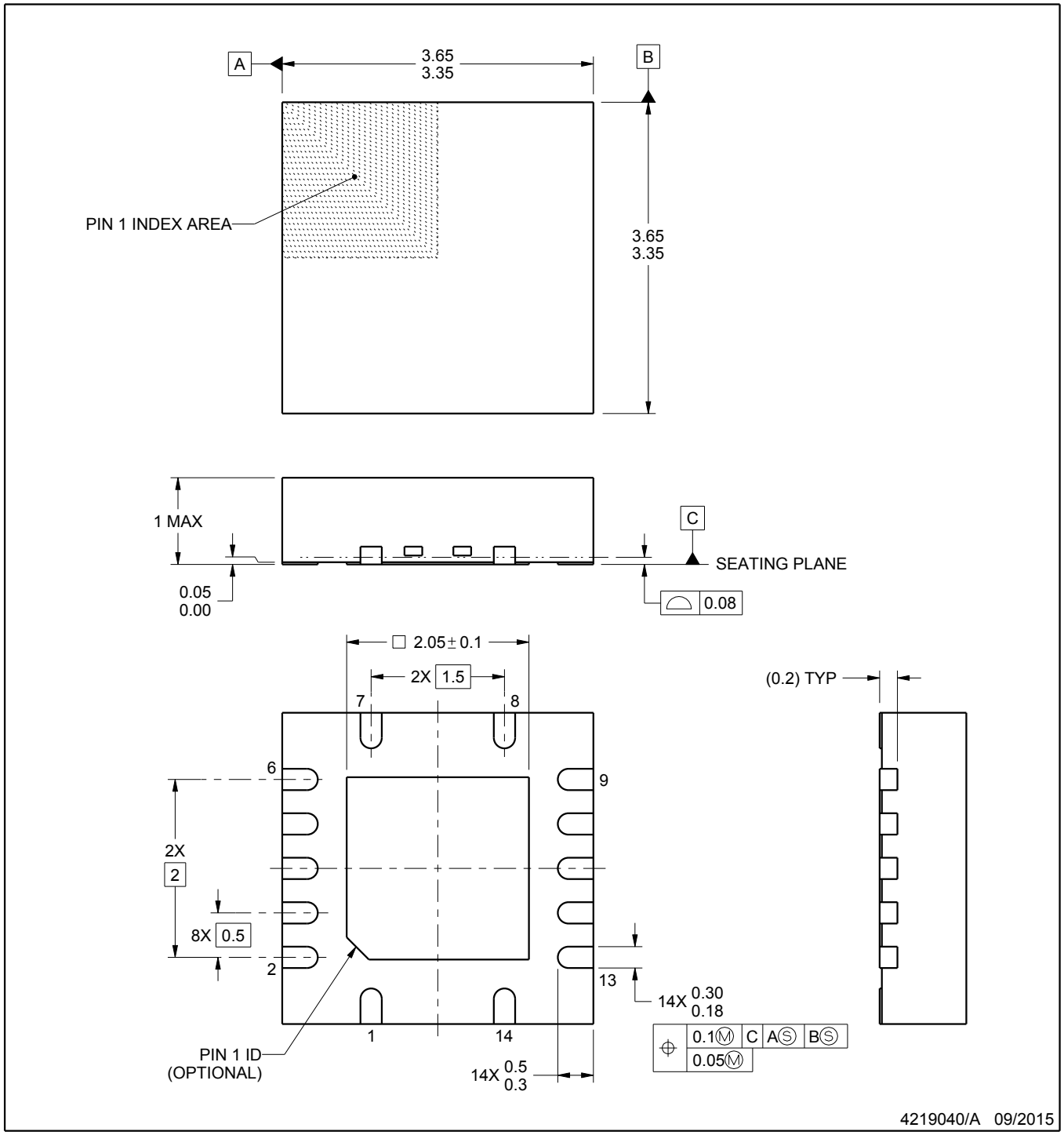

NOTES:

1. All linear dimensions are in millimeters. Any dimensions in parenthesis are for reference only. Dimensioning and tolerancing per ASME Y14.5M.
2. This drawing is subject to change without notice.
3. The package thermal pad must be soldered to the printed circuit board for thermal and mechanical performance.

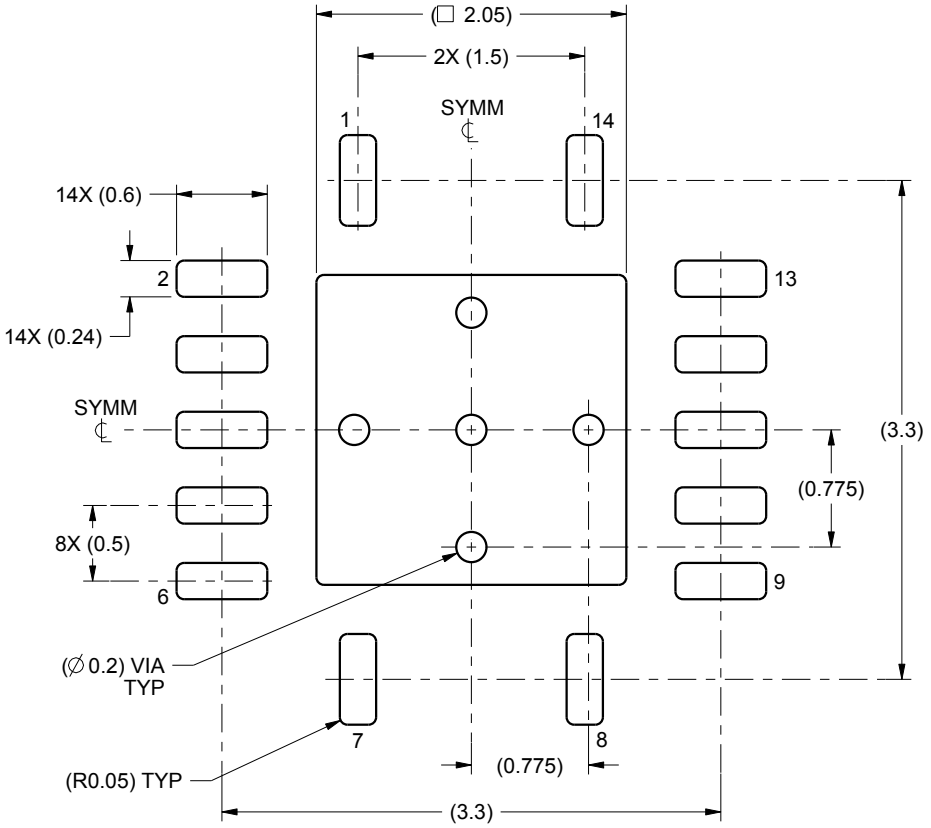

LAND PATTERN EXAMPLE
SCALE:20X

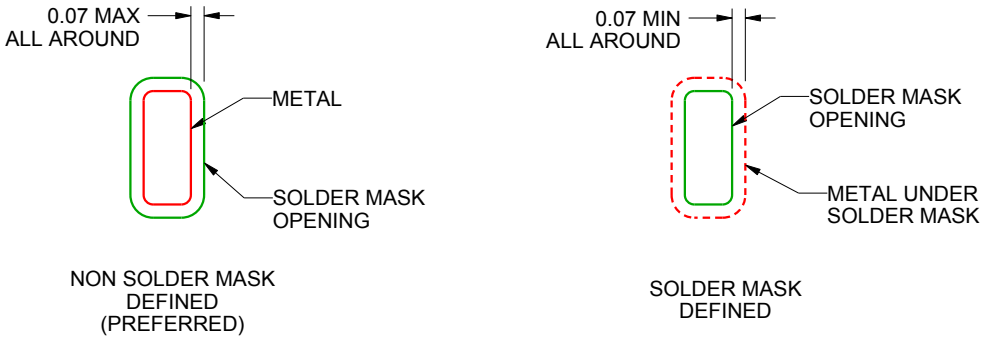

SOLDER MASK DETAILS

4219040/A 09/2015

NOTES: (continued)

4. This package is designed to be soldered to a thermal pad on the board. For more information, see Texas Instruments literature number SLUA271 (www.ti.com/lit/slua271).

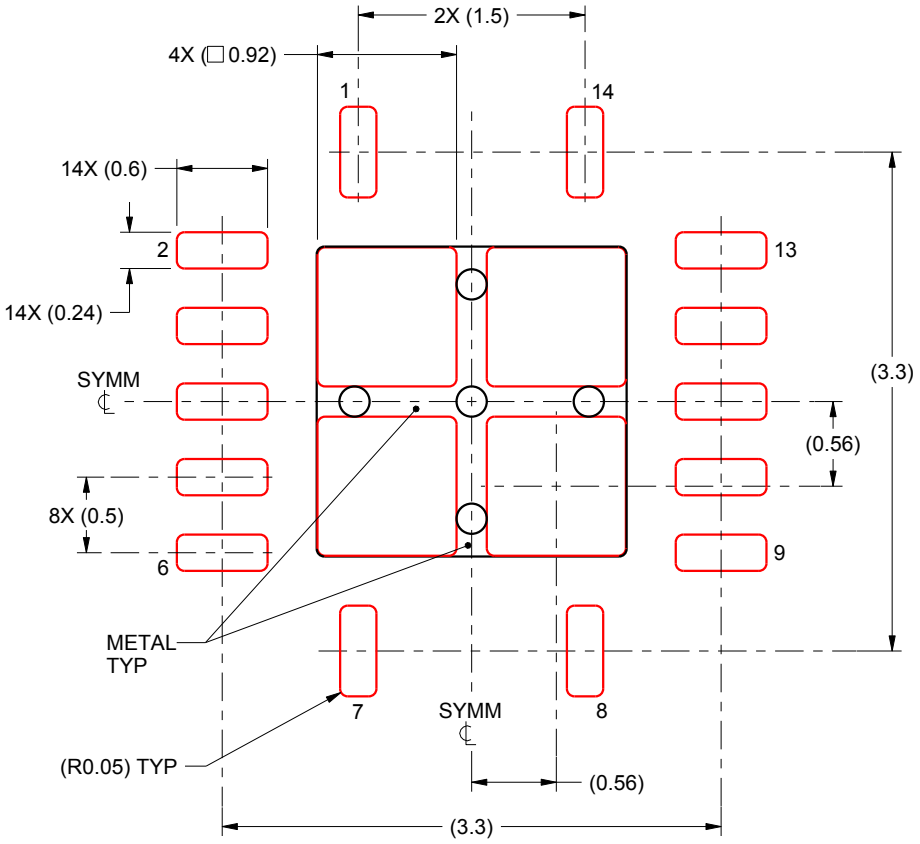

SOLDER PASTE EXAMPLE
BASED ON 0.125 mm THICK STENCIL

EXPOSED PAD
80% PRINTED SOLDER COVERAGE BY AREA
SCALE:20X

4219040/A 09/2015

NOTES: (continued)

5. Laser cutting apertures with trapezoidal walls and rounded corners may offer better paste release. IPC-7525 may have alternate design recommendations.

IMPORTANT NOTICE AND DISCLAIMER

TI PROVIDES TECHNICAL AND RELIABILITY DATA (INCLUDING DATA SHEETS), DESIGN RESOURCES (INCLUDING REFERENCE DESIGNS), APPLICATION OR OTHER DESIGN ADVICE, WEB TOOLS, SAFETY INFORMATION, AND OTHER RESOURCES “AS IS” AND WITH ALL FAULTS, AND DISCLAIMS ALL WARRANTIES, EXPRESS AND IMPLIED, INCLUDING WITHOUT LIMITATION ANY IMPLIED WARRANTIES OF MERCHANTABILITY, FITNESS FOR A PARTICULAR PURPOSE OR NON-INFRINGEMENT OF THIRD PARTY INTELLECTUAL PROPERTY RIGHTS.

These resources are intended for skilled developers designing with TI products. You are solely responsible for (1) selecting the appropriate TI products for your application, (2) designing, validating and testing your application, and (3) ensuring your application meets applicable standards, and any other safety, security, regulatory or other requirements.

These resources are subject to change without notice. TI grants you permission to use these resources only for development of an application that uses the TI products described in the resource. Other reproduction and display of these resources is prohibited. No license is granted to any other TI intellectual property right or to any third party intellectual property right. TI disclaims responsibility for, and you will fully indemnify TI and its representatives against, any claims, damages, costs, losses, and liabilities arising out of your use of these resources.

TI’s products are provided subject to TI’s Terms of Sale or other applicable terms available either on ti.com or provided in conjunction with such TI products. TI’s provision of these resources does not expand or otherwise alter TI’s applicable warranties or warranty disclaimers for TI products.

TI objects to and rejects any additional or different terms you may have proposed.

Mailing Address: Texas Instruments, Post Office Box 655303, Dallas, Texas 75265
Copyright © 2025, Texas Instruments Incorporated