OPAx134 High-Performance, SoundPlus™ Audio Operational Amplifiers

1 Features

- Excellent sound quality
- Ultra-low distortion: 0.00008%
- Low noise: 8nV/√Hz
- True FET-input: I_B = 5pA
- High speed:
  - Slew rate: 20V/µs
  - Bandwidth: 8MHz
- High open-loop gain: 120dB (2kΩ)
- Wide supply range: ±2.5V to ±18V
- Single, dual, and quad versions

2 Applications

- Professional audio and music
- Line drivers
- Line receivers
- Multimedia audio
- Active filters
- Preamplifiers
- Integrators
- Crossover networks

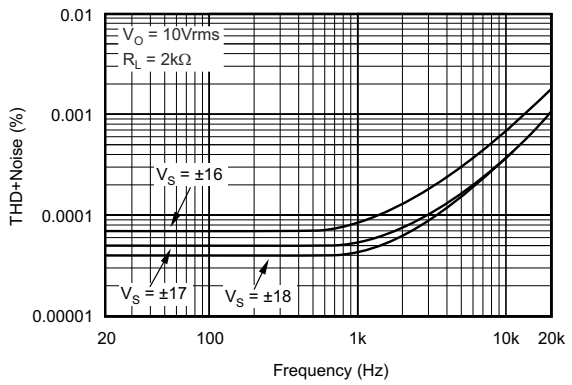

THD+Noise vs Frequency

3 Description

The OPA134, OPA2134, and OPA4134 (OPAx134) series are ultra-low distortion, low-noise operational amplifiers fully specified for audio applications. A true FET input stage is incorporated to provide excellent sound quality and speed for exceptional audio performance. This feature, in combination with high output drive capability and excellent dc performance, allows for use in a wide variety of demanding applications. In addition, the OPAx134 series has a wide output swing, to within 1V of the rails, allowing increased headroom and making these devices an excellent choice for use in any audio circuit.

The OPAx134 SoundPlus™ audio operational amplifiers are easy to use and free from phase-inversion and the overload problems often found in common FET-input operational amplifiers. The devices can be operated from ±2.5V to ±18V power supplies. Input cascode circuitry provides excellent common-mode rejection and maintains low input bias current over the wide input voltage range, minimizing distortion. The OPAx134 series operational amplifiers are unity-gain stable and provide excellent dynamic behavior over a wide range of load conditions, including high load capacitance. The dual and quad versions feature completely independent circuitry for lowest crosstalk and freedom from interaction, even when overdriven or overloaded.

Single and dual versions are available in 8-pin DIP and SO-8 surface-mount packages in standard configurations. The quad is available in SO-14 surface-mount package. All are specified for –40°C to +85°C operation. A SPICE macromodel is available for design analysis.

Device Information

PART NUMBER	CHANNEL COUNT	PACKAGE(1)
OPA134	Single	D (SOIC, 8)
		P (PDIP, 8)
OPA2134	Dual	D (SOIC, 8)
		P (PDIP, 8)
OPA4134	Quad	D (SOIC, 14)

(1) For more information, see also Section 10.

An IMPORTANT NOTICE at the end of this data sheet addresses availability, warranty, changes, use in safety-critical applications, intellectual property matters and other important disclaimers. PRODUCTION DATA.

Table of Contents

1 Features....1
2 Applications....1
3 Description....1
4 Pin Configuration and Functions....3
5 Specifications....5
5.1 Absolute Maximum Ratings....5
5.2 ESD Ratings....5
5.3 Recommended Operating Conditions....5
5.4 Thermal Information - OPA134....6
5.5 Thermal Information - OPA2134....6
5.6 Thermal Information - OPA4134....6
5.7 Electrical Characteristics....7
5.8 Typical Characteristics....9
6 Detailed Description....13
6.1 Overview....13
6.2 Feature Description....13
6.3 Functional Block Diagram....15
6.4 Device Functional Modes....15
7 Application and Implementation....16
7.1 Application Information....16
7.2 Typical Application....17
7.3 Power Supply Recommendations....18
7.4 Layout....18
8 Device and Documentation Support....20
8.1 Device Support....20
8.2 Documentation Support....20
8.3 Receiving Notification of Documentation Updates....20
8.4 Support Resources....20
8.5 Trademarks....20
8.6 Electrostatic Discharge Caution....21
8.7 Glossary....21
9 Revision History....21
10 Mechanical, Packaging, and Orderable Information....22

Copyright © 2024 Texas Instruments Incorporated

4 Pin Configuration and Functions

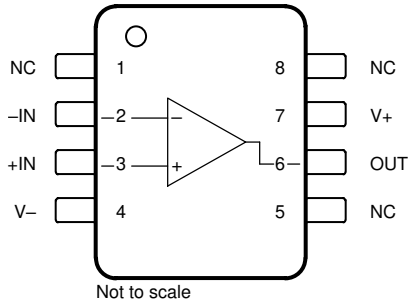

Figure 4-1. OPA134: D Package, 8-Pin SOIC, and P Package, 8-Pin PDIP (Top View)

Pin Functions: OPA134

PIN		TYPE	DESCRIPTION
NAME	NO.		
+IN	3	Input	Noninverting input
–IN	2	Input	Inverting input
NC	1, 5	—	Do not connect these pins[(1)]
NC	8	—	No internal connection. Float this pin.
Output	6	Output	Output
V+	7	Power	Positive power supply
V–	4	Power	Negative power supply

(1) Existing layouts for the OPA134 before revision B of this data sheet do not need to be redesigned.

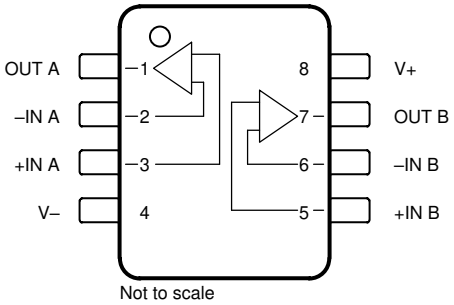

Figure 4-2. OPA2134: D Package, 8-Pin SOIC, and P Package, 8-Pin PDIP (Top View)

Table 4-1. Pin Functions: OPA2134

PIN		TYPE	DESCRIPTION
NAME	NO.		
+IN A	3	Input	Noninverting input, channel A
+IN B	5	Input	Noninverting input, channel B
–IN A	2	Input	Inverting input, channel A
–IN B	6	Input	Inverting input, channel B
OUT A	1	Output	Output, channel A
OUT B	7	Output	Output, channel B
V+	8	Power	Positive (highest) power supply
V–	4	Power	Negative (lowest) power supply

Copyright © 2024 Texas Instruments Incorporated

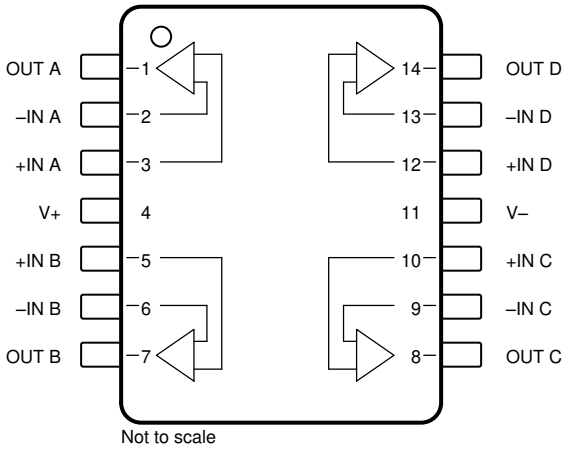

Figure 4-3. OPA4134: D Package, 14-Pin SOIC (Top View)

Table 4-2. Pin Functions: OPA4134

PIN		TYPE	DESCRIPTION
NAME	NO.		
+IN A	3	Input	Noninverting input, channel A
+IN B	5	Input	Noninverting input, channel B
+IN C	10	Input	Noninverting input, channel C
+IN D	12	Input	Noninverting input, channel D
–IN A	2	Input	Inverting input, channel A
–IN B	6	Input	Inverting input, channel B
–IN C	9	Input	Inverting input, channel C
–IN D	13	Input	Inverting input, channel D
OUT A	1	Output	Output, channel A
OUT B	7	Output	Output, channel B
OUT C	8	Output	Output, channel C
OUT D	14	Output	Output, channel D
V+	4	Power	Positive (highest) power supply
V–	11	Power	Negative (lowest) power supply

Copyright © 2024 Texas Instruments Incorporated

5 Specifications

5.1 Absolute Maximum Ratings

over operating free-air temperature range (unless otherwise noted)[1]

			MIN	MAX	UNIT
V_S	Supply voltage, (V+) – (V–)	Single supply		36	V
	Input voltage[2]		(V–) – 0.5	(V+) + 0.5	V
	Input current[2]			±10	mA
I_{SC}	Output short-circuit[3]		Continuous		
T_A	Operating temperature		–40	125	°C
T_J	Junction temperature			150	°C
T_{stg}	Storage temperature		–55	125	°C

(1) Operation outside the *Absolute Maximum Ratings* may cause permanent device damage. *Absolute Maximum Ratings* do not imply functional operation of the device at these or any other conditions beyond those listed under *Recommended Operating Conditions*. If used outside the *Recommended Operating Conditions* but within the *Absolute Maximum Ratings*, the device may not be fully functional, and this may affect device reliability, functionality, performance, and shorten the device lifetime.
(2) Input pins are diode-clamped to the power-supply rails. Input signals that can swing more than 0.5V beyond the supply rails must be current limited to 10mA or less.
(3) Short-circuit to ground, one amplifier per package.

5.2 ESD Ratings

			VALUE	UNIT
OPA134 in SOIC and PDIP Packages, and OPA2134 in PDIP Package				
$V_{(ESD)}$	Electrostatic discharge	Human-body model (HBM), per ANSI/ESDA/JEDEC JS-001[1]	±2000	V
OPA2134 in SOIC Package				
$V_{(ESD)}$	Electrostatic discharge	Human-body model (HBM), per ANSI/ESDA/JEDEC JS-001[1]	±2000	V
		Charged-device model (CDM), per JEDEC specification JESD22-C101[2]	±500	
OPA4134 in SOIC Package				
$V_{(ESD)}$	Electrostatic discharge	Human-body model (HBM), per ANSI/ESDA/JEDEC JS-001[1]	±2000	V
	Electrostatic discharge	Charged-device model (CDM), per JEDEC specification JESD22-C101[2]	±200	

(1) JEDEC document JEP155 states that 500V HBM allows safe manufacturing with a standard ESD control process.
(2) JEDEC document JEP157 states that 250V CDM allows safe manufacturing with a standard ESD control process.

5.3 Recommended Operating Conditions

over operating free-air temperature range (unless otherwise noted)

			MIN	NOM	MAX	UNIT
V_S	Supply voltage, (V+) – (V–)	Dual supply	±2.5	±15	±18	V
		Single supply	5	30	36	
T_A	Ambient temperature		–40		+85	°C

5.4 Thermal Information - OPA134

THERMAL METRIC[1]		OPA134		UNIT
		D (SOIC)	P (PDIP)	
		8 PINS	8 PINS	
$R_{\theta JA}$	Junction-to-ambient thermal resistance	160	73	°C/W
$R_{\theta JC(top)}$	Junction-to-case (top) thermal resistance	75	50	°C/W
$R_{\theta JB}$	Junction-to-board thermal resistance	60	36	°C/W
Ψ_{JT}	Junction-to-top characterization parameter	9	17	°C/W
Ψ_{JB}	Junction-to-board characterization parameter	50	35	°C/W
$R_{\theta JC(bot)}$	Junction-to-case (bottom) thermal resistance	N/A	N/A	°C/W

(1) For more information about traditional and new thermal metrics, see the *Semiconductor and IC Package Thermal Metrics* application report.

5.5 Thermal Information - OPA2134

THERMAL METRIC[1]		OPA2134		UNIT
		D (SOIC)	P (PDIP)	
		8 PINS	8 PINS	
$R_{\theta JA}$	Junction-to-ambient thermal resistance	160	71	°C/W
$R_{\theta JC(top)}$	Junction-to-case (top) thermal resistance	75	50	°C/W
$R_{\theta JB}$	Junction-to-board thermal resistance	60	36	°C/W
Ψ_{JT}	Junction-to-top characterization parameter	9	16	°C/W
Ψ_{JB}	Junction-to-board characterization parameter	50	35	°C/W
$R_{\theta JC(bot)}$	Junction-to-case (bottom) thermal resistance	N/A	N/A	°C/W

(1) For more information about traditional and new thermal metrics, see the *Semiconductor and IC Package Thermal Metrics* application report.

5.6 Thermal Information - OPA4134

THERMAL METRIC[1]		OPA4132	UNIT
		D (SOIC)	
		14 PINS	
$R_{\theta JA}$	Junction-to-ambient thermal resistance	97	°C/W
$R_{\theta JC(top)}$	Junction-to-case (top) thermal resistance	56	°C/W
$R_{\theta JB}$	Junction-to-board thermal resistance	53	°C/W
Ψ_{JT}	Junction-to-top characterization parameter	19	°C/W
Ψ_{JB}	Junction-to-board characterization parameter	46	°C/W
$R_{\theta JC(bot)}$	Junction-to-case (bottom) thermal resistance	N/A	°C/W

(1) For more information about traditional and new thermal metrics, see the *Semiconductor and IC Package Thermal Metrics* application report.

Copyright © 2024 Texas Instruments Incorporated

5.7 Electrical Characteristics

at T_A = 25°C, V_S = ±15V, R_L = 2kΩ connected to midsupply, and V_{CM} = V_{OUT} = midsupply (unless otherwise noted)

PARAMETER		TEST CONDITIONS		MIN	TYP	MAX	UNIT
AUDIO PERFORMANCE							
THD+N	Total harmonic distortion plus noise	f = 1kHz, G = 1, V_O = 3V_{rms}	R_L = 2kΩ		0.00008		%
			R_L = 600Ω		0.00015		
	Intermodulation distortion	f = 1kHz, G = 1, V_O = 1V_{PP}			–98		dB
	Headroom[1]	THD < 0.01%, R_L = 2kΩ, V_S = 18V			21.3		dBu
FREQUENCY RESPONSE							
GBW	Gain bandwidth product				8		MHz
SR	Slew rate[2]				±20		V/µs
	Settling time	10V step, G = 1, C_L = 100pF	0.1%		0.7		µs
			0.01%		1		
FPBW	Full power bandwidth				1.3		MHz
	Overload recovery time	V_{IN} × G = V_S			0.6		µs
NOISE							
	Input voltage noise	f = 20Hz to 20kHz			1.2		µV_{rms}
e_n	Input voltage noise density	f = 1kHz			8		nV/√Hz
I_n	Input current noise density	f = 1kHz			3		fA/√Hz
OFFSET VOLTAGE							
V_{OS}	Input offset voltage				±1	±3.5	mV
		T_A = –40°C to +85°C			±1		
dV_{OS}/dT	Input offset voltage drift	T_A = –40°C to +85°C			±2		µV/°C
PSRR	Power-supply rejection ratio	5V ≤ V_S ≤ 36V		90	106		dB
	Channel separation (dual, quad)	DC, R_L = 2kΩ			128		dB
		f = 20kHz, R_L = 2kΩ			126		
INPUT BIAS CURRENT							
I_B	Input bias current[3]				±5	±100	pA
		T_A = –40°C to +85°C			See Section 5.8	±5	nA
I_{OS}	Input offset current[3]				±2	±50	pA
INPUT VOLTAGE							
V_{CM}	Common-mode voltage			(V–) + 2.5	±13	(V+) – 3.5	V
CMRR	Common-mode rejection ratio	–12.5V ≤ V_{CM} ≤ 11.5V		86	100		dB
			TA = –40°C to +85°C		90		
INPUT IMPEDANCE							
	Differential				10^{13} || 8		Ω || pF
	Common-mode	–12.5V ≤ V_{CM} ≤ 11.5V			10^{13} || 6		Ω || pF
OPEN-LOOP GAIN							
A_{OL}	Open-loop voltage gain	R_L = 10kΩ, –14.5V ≤ V_O ≤ 13.8V		104	120		dB
		R_L = 2kΩ, –13.8V ≤ V_O ≤ 13.5V		104	120		

5.7 Electrical Characteristics (continued)

at T_A = 25°C, V_S = ±15V, R_L = 2kΩ connected to midsupply, and V_{CM} = V_{OUT} = midsupply (unless otherwise noted)

PARAMETER		TEST CONDITIONS		MIN	TYP	MAX	UNIT
OUTPUT							
V_O	Voltage output	R_L = 10kΩ	Positive	(V+) – 1.2			V
			Negative			(V–) + 0.5	
		R_L = 2kΩ	Positive	(V+) – 1.5			
			Negative			(V–) + 1.2	
I_{SC}	Short-circuit current	Sourcing			36		mA
		Sinking			–30		
Z_O	Output impedance	f = 10kHz	Closed-loop(4)		0.01		Ω
			Open-loop		10		
	Capacitive load drive	Stable operation		See *Typical Characteristics*			
POWER SUPPLY							
I_Q	Quiescent current (per amplifier)	I_O = 0mA			4	5	mA

(1) dBu = 20 × log (V_{rms} / 0.7746) where V_{rms} is the maximum output voltage for which THD+Noise is less than 0.01%. See *Total Harmonic Distortion*.
(2) Proposed by design.
(3) High-speed test at T_J = 25°C.
(4) See *Closed-Loop Output Impedance vs Frequency* in *Typical Characteristics*.

Copyright © 2024 Texas Instruments Incorporated

5.8 Typical Characteristics

at T_A = 25°C, V_S = ±15V, R_L = 2kΩ connected to midsupply, and V_{CM} = V_{OUT} = midsupply (unless otherwise noted)

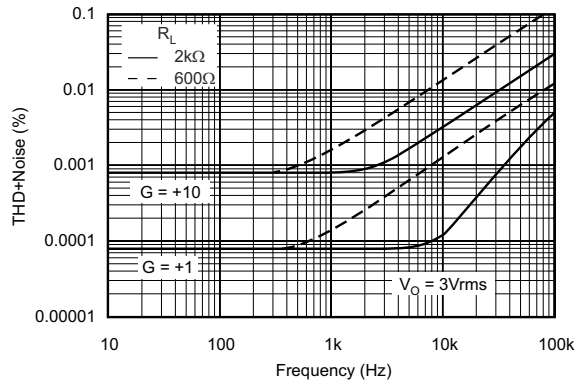

Figure 5-1. Total Harmonic Distortion + Noise vs Frequency

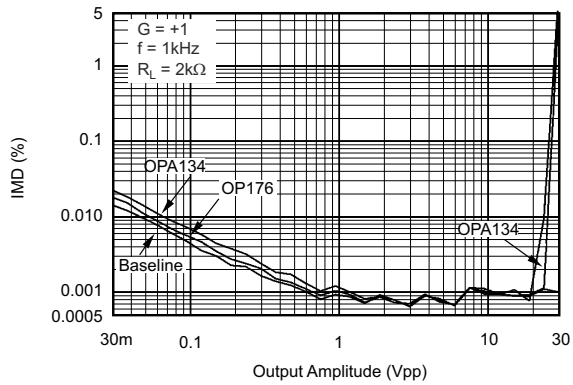

Figure 5-2. SMPTE Intermodulation Distortion vs Output Amplitude

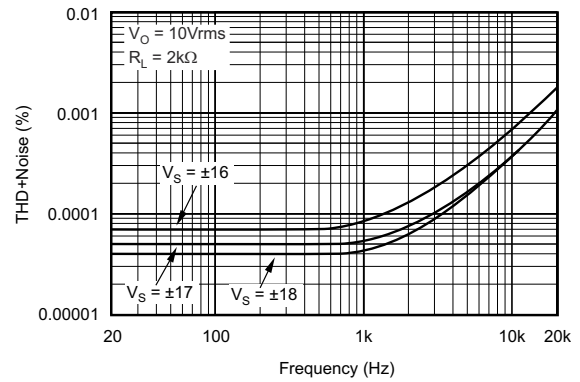

Figure 5-3. Total Harmonic Distortion + Noise vs Frequency

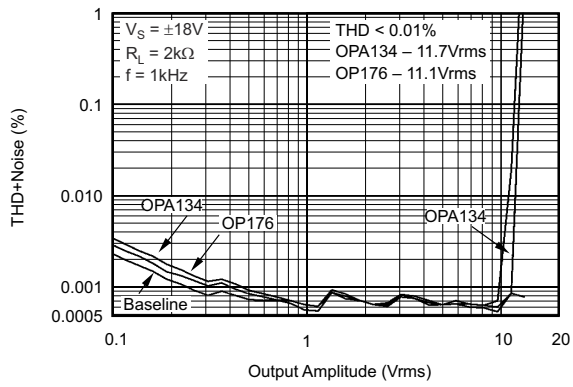

Figure 5-4. Headroom – Total Harmonic Distortion + Noise vs Output Amplitude

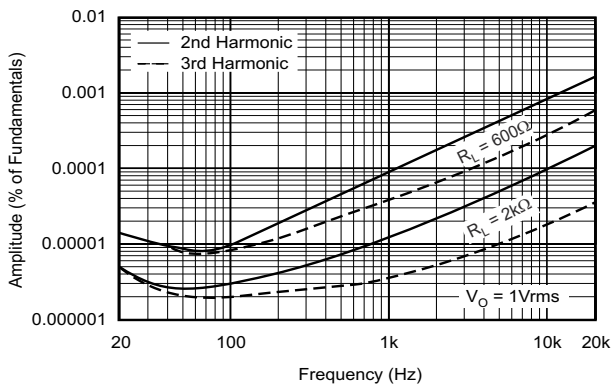

Figure 5-5. Harmonic Distortion + Noise vs Frequency

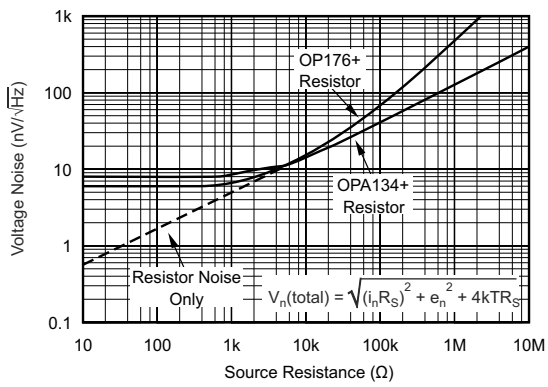

Figure 5-6. Voltage Noise vs Source Resistance

5.8 Typical Characteristics (continued)

at T_A = 25°C, V_S = ±15V, R_L = 2kΩ connected to midsupply, and V_{CM} = V_{OUT} = midsupply (unless otherwise noted)

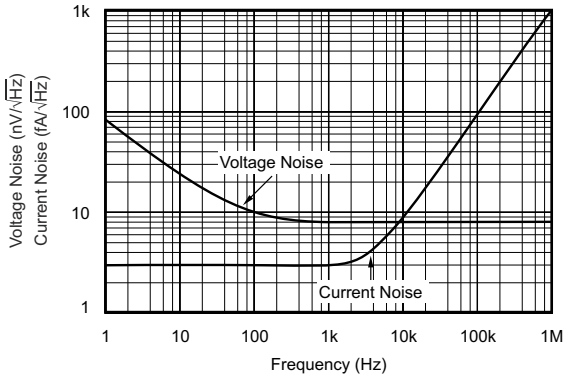

Figure 5-7. Input Voltage and Current Noise Spectral Density vs Frequency

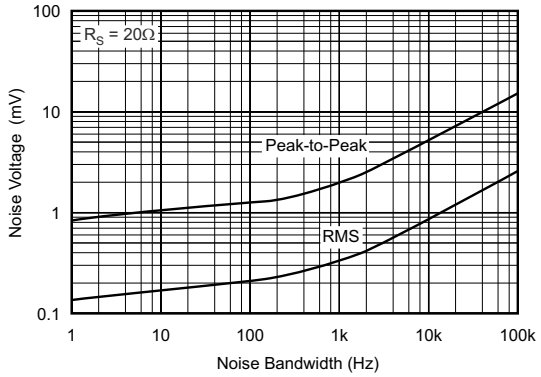

Figure 5-8. Input-Referred Noise Voltage vs Noise Bandwidth

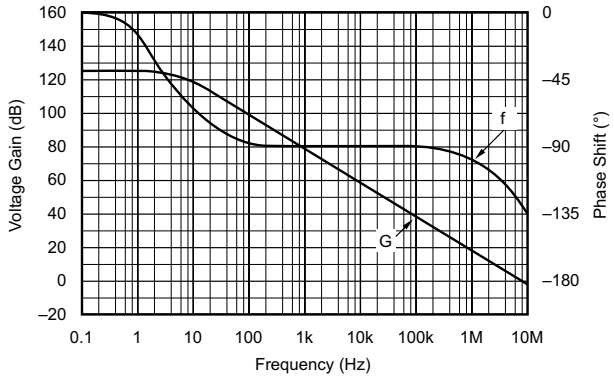

Figure 5-9. Open-Loop Gain and Phase vs Frequency

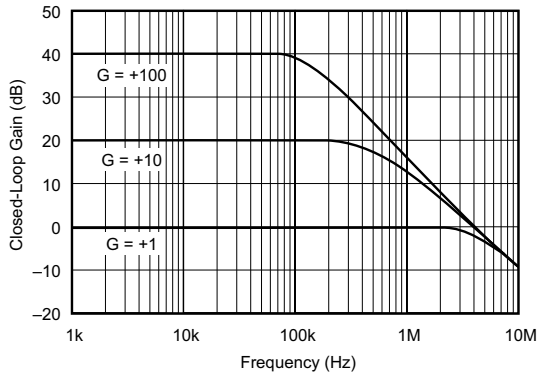

Figure 5-10. Closed-Loop Gain vs Frequency

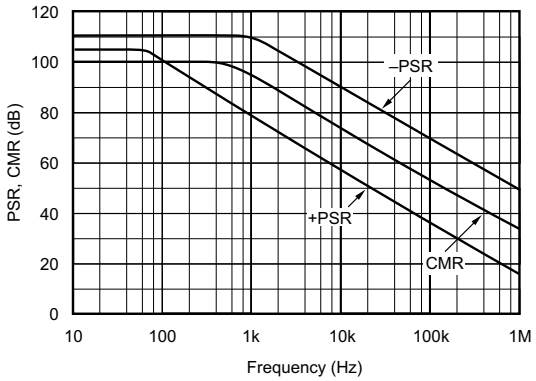

Figure 5-11. Power Supply and Common-Mode Rejection vs Frequency

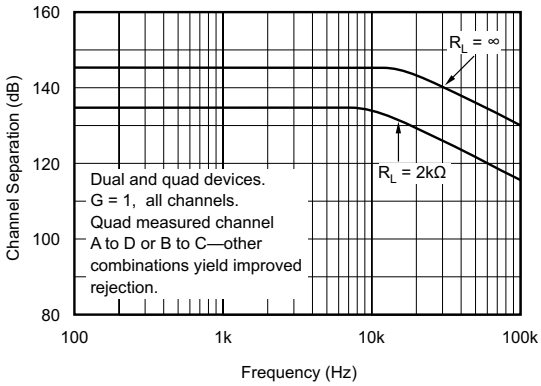

Figure 5-12. Channel Separation vs Frequency

Copyright © 2024 Texas Instruments Incorporated

5.8 Typical Characteristics (continued)

at T_A = 25°C, V_S = ±15V, R_L = 2kΩ connected to midsupply, and V_{CM} = V_{OUT} = midsupply (unless otherwise noted)

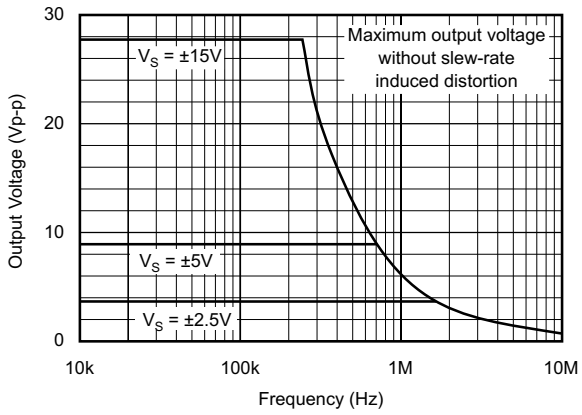

Figure 5-13. Maximum Output Voltage vs Frequency

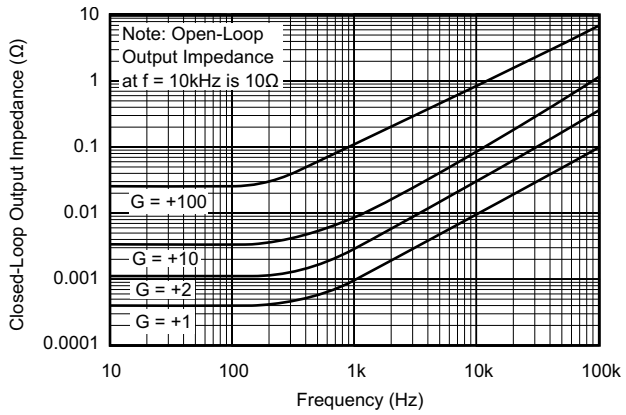

Figure 5-14. Closed-Loop Output Impedance vs Frequency

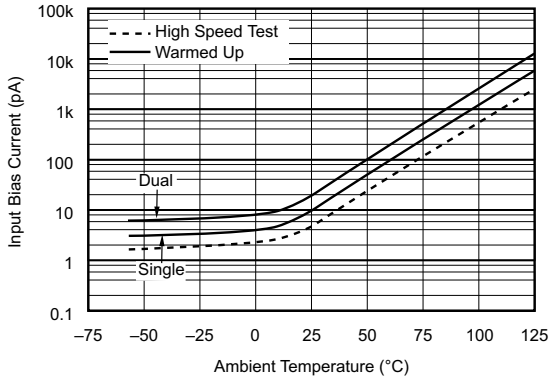

Figure 5-15. Input Bias Current vs Temperature

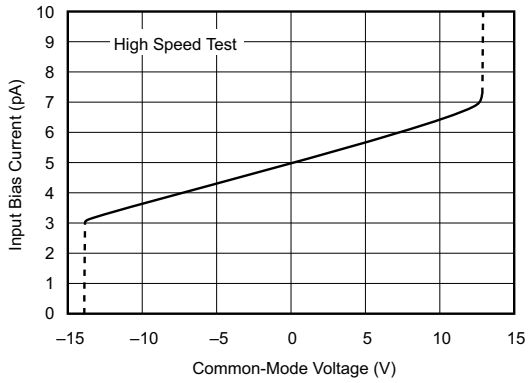

Figure 5-16. Input Bias Current vs Input Common-Mode Voltage

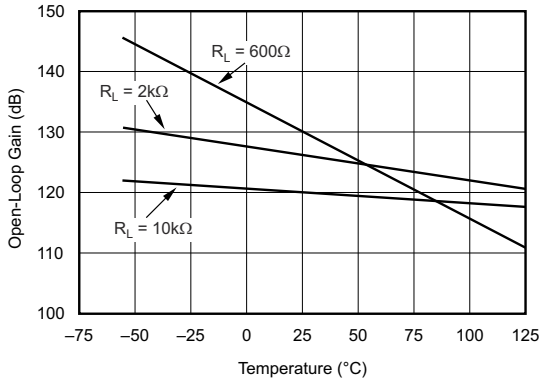

Figure 5-17. Open-Loop Gain vs Temperature

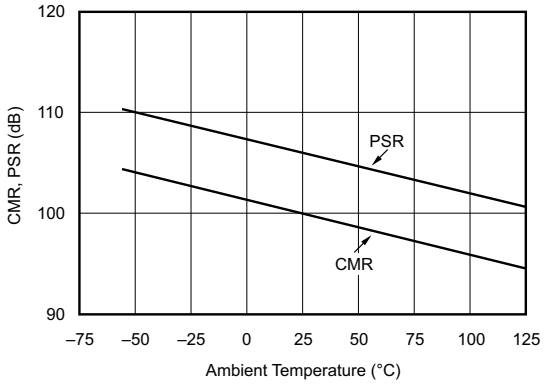

Figure 5-18. CMR, PSR vs Temperature

5.8 Typical Characteristics (continued)

at T_A = 25°C, V_S = ±15V, R_L = 2kΩ connected to midsupply, and V_{CM} = V_{OUT} = midsupply (unless otherwise noted)

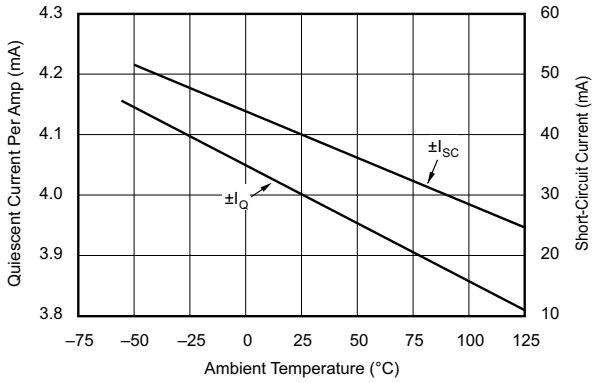

Figure 5-19. Quiescent Current and Short-Circuit Current vs Temperature

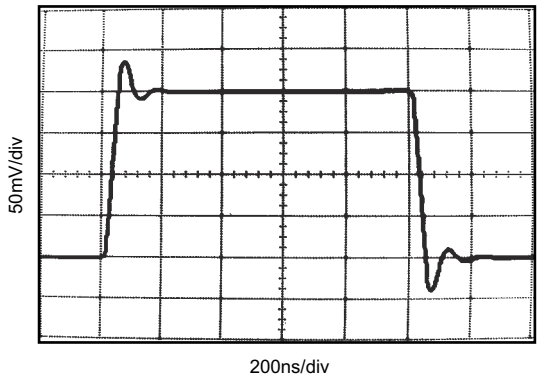

G = 1, C_L = 100pF

Figure 5-20. Small-Signal Step Response

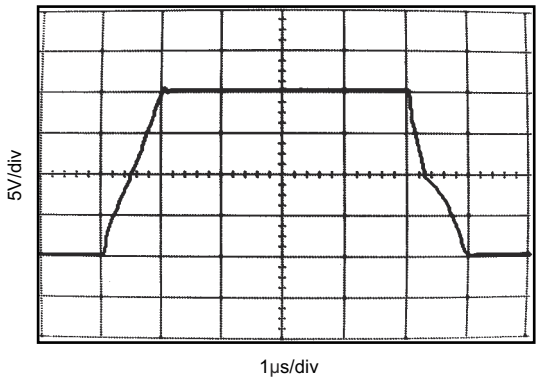

G = 1, C_L = 100pF

Figure 5-21. Large-Signal Step Response

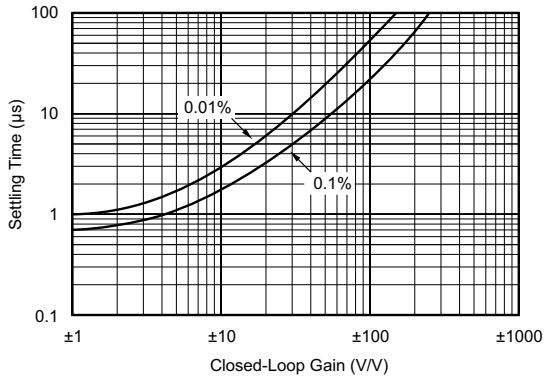

Figure 5-22. Settling Time vs Closed-Loop Gain

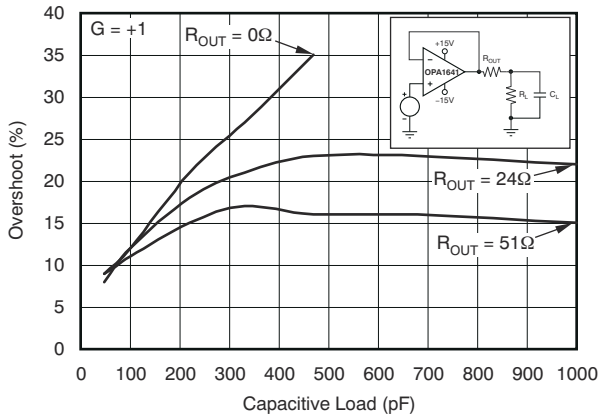

G = +1

Figure 5-23. Small-Signal Overshoot vs Load Capacitance

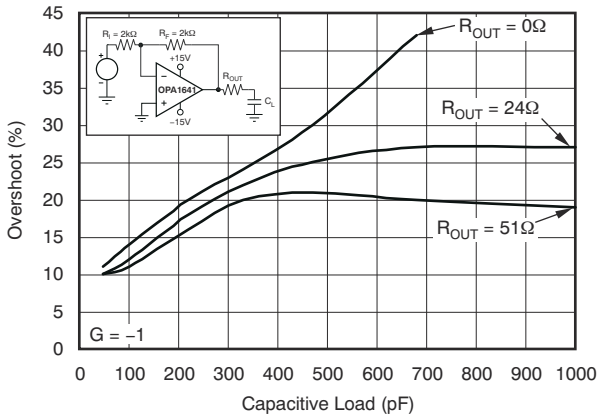

G = –1

Figure 5-24. Small-Signal Overshoot vs Load Capacitance

Copyright © 2024 Texas Instruments Incorporated

6 Detailed Description

6.1 Overview

The OPA134 series are ultra-low distortion, low-noise operational amplifiers fully specified for audio applications. A true FET input stage is incorporated to provide unmatched sound quality and speed for exceptional audio performance. This, in combination with high output drive capability and excellent DC performance, allows for use in a wide variety of demanding applications. In addition, the OPA134 has a wide output swing, to within 1V of the rails, allowing increased headroom and making this op amp an excellent choice for any audio circuit.

6.2 Feature Description

6.2.1 Total Harmonic Distortion

The OPAx134 series of operational amplifiers have excellent distortion characteristics. THD+Noise is below 0.0004% throughout the audio frequency range, 20Hz to 20kHz, with a 2kΩ load. In addition, distortion remains relatively flat through the wide output voltage swing range, providing increased headroom compared to other audio amplifiers, including the OP176/275.

Headroom is a subjective measurement, and can be thought of as the maximum output amplitude allowed while still maintaining a low level of distortion. In an attempt to quantify headroom, TI defines very low distortion as 0.01%. Headroom is expressed as a ratio which compares the maximum allowable output voltage level to a standard output level (1mW into 600Ω, or 0.7746Vrms). Therefore, OPA134 series of operational amplifiers, which have a maximum allowable output voltage level of 11.7Vrms (THD+Noise < 0.01%), have a headroom specification of 23.6dBu. See Figure 5-4.

6.2.2 Distortion Measurements

The distortion produced by OPAx134 series of operational amplifiers is below the measurement limit of all known commercially-available equipment. However, a special test circuit can extend the measurement capabilities.

Operational amplifier distortion can be considered an internal error source which can be referred to the input. Figure 6-1 shows a circuit which causes the operational amplifier distortion to be 101 times greater than that which the operational amplifier normally produces. The addition of R_3 to the otherwise standard non-inverting amplifier configuration alters the feedback factor or noise gain of the circuit. The closed-loop gain is unchanged, but the feedback available for error correction is reduced by a factor of 101, thus extending the resolution by 101. The input signal and load applied to the operational amplifier are the same as with conventional feedback without R_3. Keep the value of R_3 small to minimize effect on the distortion measurements.

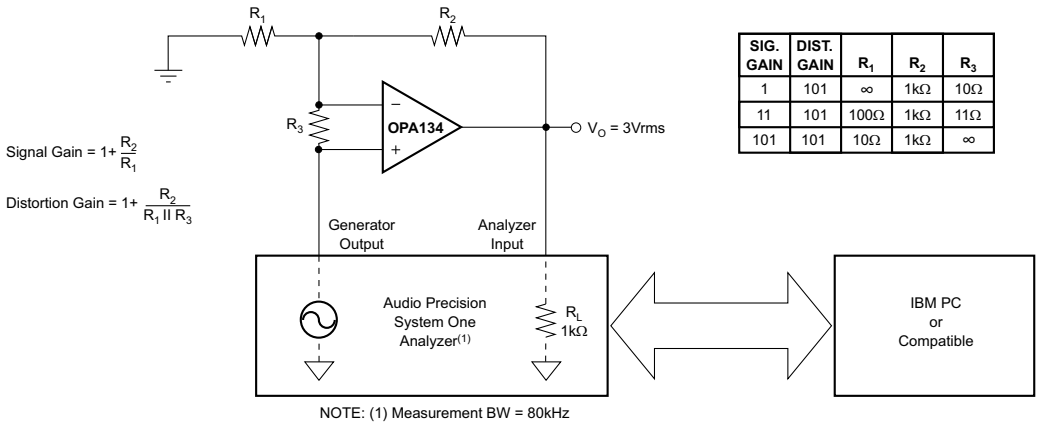

SIG. GAIN	DIST. GAIN	R_1	R_2	R_3
1	101	∞	1kΩ	10Ω
11	101	100Ω	1kΩ	11Ω
101	101	10Ω	1kΩ	∞

Figure 6-1. Distortion Test Circuit

This technique can be verified by duplicating measurements at high gain or high frequency, where the distortion is within the measurement capability of the test equipment. Measurements for this data sheet were made with an Audio Precision distortion and noise analyzer, which greatly simplifies repetitive measurements. The measurement technique can, however, be performed with manual distortion measurement instruments.

6.2.3 Source Impedance and Distortion

For lowest distortion with a source or feedback network with an impedance greater than 2kΩ, match the impedance seen by the positive and negative inputs in noninverting applications. The p-channel JFETs in the FET input stage exhibit a varying input capacitance with applied common-mode input voltage. In inverting configurations, the input does not vary with input voltage, because the inverting input is held at virtual ground. However, in noninverting applications the inputs do vary, and the gate-to-source voltage is not constant. The effect is increased distortion due to the varying capacitance for unmatched source impedances greater than 2kΩ.

To maintain low distortion, match unbalanced source impedance with the appropriate values in the feedback network as shown in Figure 6-2. Of course, the unbalanced impedance can be from gain-setting resistors in the feedback path. If the parallel combination of R_1 and R_2 is greater than 2kΩ, use a matching impedance on the noninverting input. As always, minimize resistor values to reduce the effects of thermal noise.

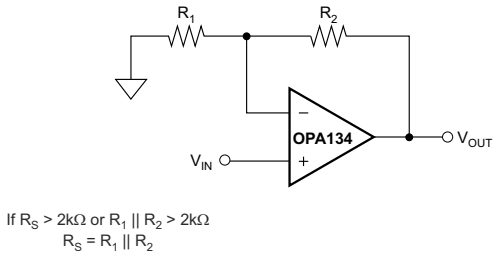

Figure 6-2. Impedance Matching for Maintaining Low Distortion in Noninverting Circuits

Copyright © 2024 Texas Instruments Incorporated

6.2.4 Phase Reversal Protection

The OPAx134 series of operational amplifiers are free from output phase-reversal problems. Many audio operational amplifiers, such as the OP176, exhibit phase-reversal of the output when the input common-mode voltage range is exceeded. This can occur in voltage-follower circuits, causing serious problems in control loop applications. The OPA134 series operational amplifiers are free from this undesirable behavior even with inputs of 10V beyond the input common-mode range.

6.2.5 Output Current Limit

Output current is limited by internal circuitry to approximately sourcing 36mA and sinking –30mA at 25°C. The limit current decreases with increasing temperature, as shown in Figure 5-19.

6.3 Functional Block Diagram

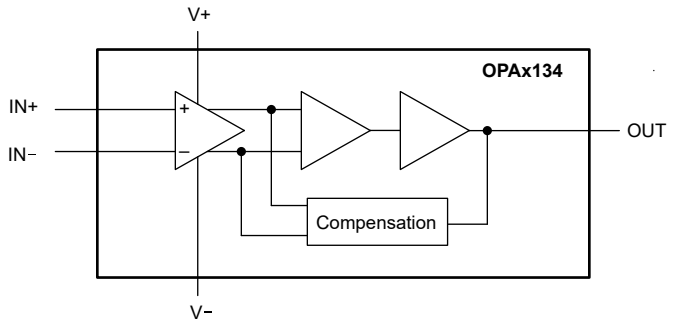

6.4 Device Functional Modes

6.4.1 Noise Performance

Circuit noise is determined by the thermal noise of external resistors and operational amplifier noise. Operational amplifier noise is described by two parameters: noise voltage and noise current. The total noise is quantified by the equation:

$$V_n\left(total\right) = \sqrt{e_n{}^2 + \left(i_n R_S\right)^2 + 4kTR_S} \tag{1}$$

With low source impedance, the current noise term is insignificant and voltage noise dominates the noise performance. At high source impedance, the current noise term becomes the dominant contributor.

Low-noise bipolar operational amplifiers such as the OPA27 and OPA37 provide low voltage noise at the expense of a higher current noise. However, OPAx134 series operational amplifiers provide both low voltage noise and low current noise. This provides optimum noise performance over a wide range of sources, including reactive source impedances; refer to Figure 5-6. Above 2kΩ source resistance, the operational amplifier contributes little additional noise; the voltage and current terms in the total noise equation become insignificant and the source resistance term dominates. Below 2kΩ, operational amplifier voltage noise dominates over the resistor noise, but compares favorably with other audio operational amplifiers such as the OP176.

Copyright © 2024 Texas Instruments Incorporated

7 Application and Implementation

Note

Information in the following applications sections is not part of the TI component specification, and TI does not warrant its accuracy or completeness. TI's customers are responsible for determining suitability of components for their purposes, as well as validating and testing their design implementation to confirm system functionality.

7.1 Application Information

The OPAx134 series operational amplifiers are unity-gain stable, and an excellent choice for a wide range of audio and general-purpose applications. All circuitry is independent in the dual version, maintaining normal behavior when one amplifier in a package is overdriven or short-circuited. Bypass the power supply pins with 10nF ceramic capacitors or larger to minimize power supply noise.

7.1.1 Operating Voltage

The OPAx134 series of operational amplifiers operate with power supplies from ±2.5V to ±18V with excellent performance. Although specifications are production tested with ±15V supplies, most behavior remains unchanged throughout the full operating voltage range. Parameters which vary significantly with operating voltage are shown in *Section 5.8*.

7.1.2 Offset Voltage Trim

Offset voltage of OPAx134 series amplifiers are laser-trimmed, and usually require no user adjustment. The OPAx134 provide less than ±2mV of input offset voltage and a typical input offset voltage drift of 10µV/°C over the operating temperature range.

Copyright © 2024 Texas Instruments Incorporated

7.2 Typical Application

The OPAx134 family offers outstanding dc precision and AC performance. These devices operate up to 36V supply rails and offer ultra-low distortion and noise, as well as 8MHz bandwidth and high capacitive load drive. These features make the OPAx134 a robust, high-performance operational amplifier for high-voltage professional audio applications.

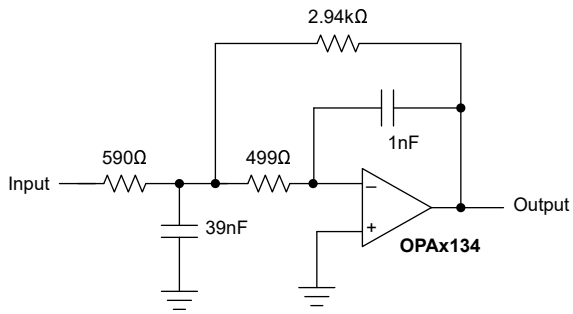

Figure 7-1. OPA134 2nd-Order, 30kHz, Low-Pass Filter Schematic

7.2.1 Design Requirements

- Gain = 5V/V (inverting)
- Low-pass cutoff frequency = 30kHz
- –40db/dec filter response
- Maintain less than 3dB gain peaking in the gain versus frequency response

7.2.2 Detailed Design Procedure

The infinite-gain multiple-feedback circuit for a low-pass network function is shown in Figure 7-1. The voltage transfer function is:

$$\frac{Output}{Input}(s) = \frac{\frac{-1}{R_1 R_3 C_2 C_5}}{s^2 + s\left(\frac{1}{C_2}\right)\left(\frac{1}{R_1} + \frac{1}{R_3} + \frac{1}{R_4}\right) + \left(\frac{1}{R_3 R_4 C_2 C_5}\right)} \tag{2}$$

This circuit produces a signal inversion. For this circuit, the gain at DC and the low-pass cutoff frequency are calculated using Equation 3 and Equation 4.

$$Gain = \frac{R_4}{R_1} \tag{3}$$

$$f_C = \frac{1}{2\pi}\sqrt{\frac{1}{R_3 R_4 C_2 C_5}} \tag{4}$$

WEBENCH® Circuit Designer creates customized power supply and active filter circuits based on your system requirements. The environment gives you end-to-end selection, design, and simulation capabilities that save you time during all phases of the analog design process.

Use our tools to help with your designs:

- Filter design tool
- Powerstage designer
- WEBENCH® Power designer
- PCB thermal calculator

7.2.3 Application Curve

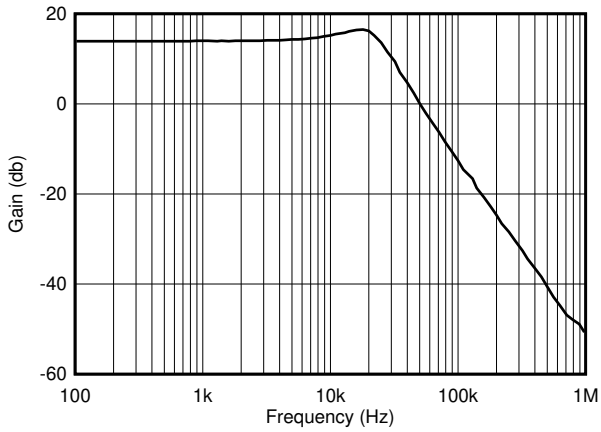

Figure 7-2. OPA134 2nd-Order, 30kHz, Low-Pass Filter Response

7.3 Power Supply Recommendations

The OPAx134 is specified for operation from 5V to 36V (±2.5V to ±18V); many specifications apply from –40°C to +85°C. Parameters that can exhibit significant variance with regard to operating voltage or temperature are presented in *Section 5.8*.

CAUTION

Supply voltages larger than 36V can permanently damage the device; see *Section 5.1*.

Place 10nF bypass capacitors close to the power-supply pins to reduce errors coupling in from noisy or high-impedance power supplies. For more detailed information on bypass capacitor placement, see *Section 7.4.1*.

7.4 Layout

7.4.1 Layout Guidelines

For best operational performance of the device, use good PCB layout practices, including:

- Noise can propagate into analog circuitry through the operational amplifier and the power pins of the circuit as a whole. Bypass capacitors are used to reduce the coupled noise by providing low-impedance power sources local to the analog circuitry.
  - Connect low-ESR, 10nF ceramic bypass capacitors between each supply pin and ground, placed as close as possible to the device. A single bypass capacitor from V+ to ground is applicable for single-supply applications.
- Separate grounding for analog and digital portions of circuitry is one of the simplest and most-effective methods of noise suppression. One or more layers on multilayer PCBs are usually devoted to ground planes. A ground plane helps distribute heat and reduces EMI noise pickup. Make sure to physically separate digital and analog grounds paying attention to the flow of the ground current.
- To reduce parasitic coupling, run the input traces as far away from the supply or output traces as possible. If these traces cannot be kept separate, crossing the sensitive trace perpendicular is much better as opposed to in parallel with the noisy trace.
- Place the external components as close to the device as possible. As shown in *Section 7.4.2*, keeping RF and RG close to the inverting input minimizes parasitic capacitance.
- Keep the length of input traces as short as possible. Always remember that the input traces are the most sensitive part of the circuit.
- Consider a driven, low-impedance guard ring around the critical traces. A guard ring can significantly reduce leakage currents from nearby traces that are at different potentials.
- Cleaning the PCB following board assembly is recommended for best performance.

Copyright © 2024 Texas Instruments Incorporated

- Any precision integrated circuit can experience performance shifts due to moisture ingress into the plastic package. Following any aqueous PCB cleaning process, TI recommends baking the PCB assembly to remove moisture introduced into the device packaging during the cleaning process. A low temperature, post cleaning bake at 85°C for 30 minutes is sufficient for most circumstances.

7.4.2 Layout Example

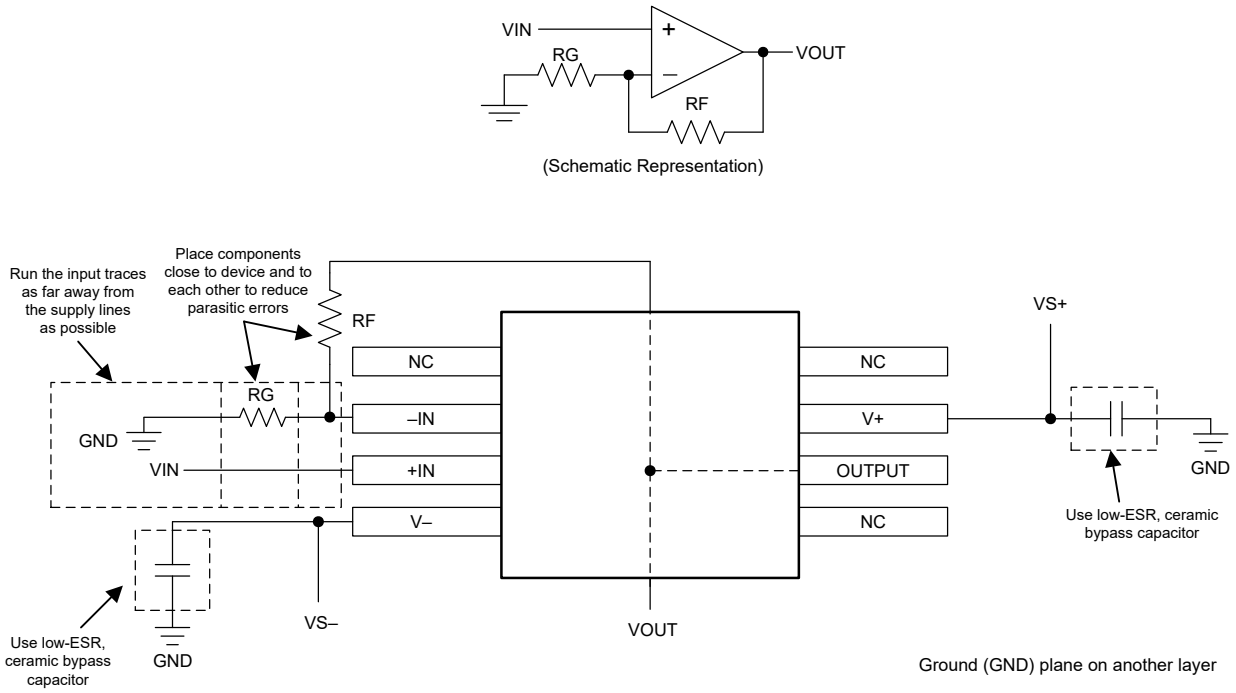

Figure 7-3. OPA134 Layout Example for the Noninverting Configuration

8 Device and Documentation Support

8.1 Device Support

8.1.1 Development Support

8.1.1.1 Analog Filter Designer

Available as a web-based tool from the Design and simulation tool web page, the Analog Filter Designer allows the user to design, optimize, and simulate complete multistage active filter solutions within minutes.

8.1.1.2 TINA-TI™ Simulation Software (Free Download)

TINA-TI™ simulation software is a simple, powerful, and easy-to-use circuit simulation program based on a SPICE engine. TINA-TI simulation software is a free, fully-functional version of the TINA™ software, preloaded with a library of macromodels, in addition to a range of both passive and active models. TINA-TI simulation software provides all the conventional dc, transient, and frequency domain analysis of SPICE, as well as additional design capabilities.

Available as a free download from the Design and simulation tools web page, TINA-TI simulation software offers extensive post-processing capability that allows users to format results in a variety of ways. Virtual instruments offer the ability to select input waveforms and probe circuit nodes, voltages, and waveforms, creating a dynamic quick-start tool.

Note

These files require that either the TINA software or TINA-TI software be installed. Download the free TINA-TI simulation software from the TINA-TI™ software folder.

8.1.1.3 TI Reference Designs

TI reference designs are analog solutions created by TI's precision analog applications experts. TI reference designs offer the theory of operation, component selection, simulation, complete PCB schematic and layout, bill of materials, and measured performance of many useful circuits. TI reference designs are available online at https://www.ti.com/reference-designs.

8.2 Documentation Support

8.2.1 Related Documentation

For related documentation, see the following (available for download from www.ti.com):

- Texas Instruments, *EMI Rejection Ratio of Operational Amplifiers*
- Texas Instruments, *Circuit Board Layout Techniques*

8.3 Receiving Notification of Documentation Updates

To receive notification of documentation updates, navigate to the device product folder on ti.com. Click on *Notifications* to register and receive a weekly digest of any product information that has changed. For change details, review the revision history included in any revised document.

8.4 Support Resources

TI E2E™ support forums are an engineer's go-to source for fast, verified answers and design help — straight from the experts. Search existing answers or ask your own question to get the quick design help you need.

Linked content is provided "AS IS" by the respective contributors. They do not constitute TI specifications and do not necessarily reflect TI's views; see TI's Terms of Use.

8.5 Trademarks

SoundPlus™, TINA-TI™, and TI E2E™ are trademarks of Texas Instruments.
TINA™ is a trademark of DesignSoft, Inc.
All trademarks are the property of their respective owners.

Copyright © 2024 Texas Instruments Incorporated

8.6 Electrostatic Discharge Caution

This integrated circuit can be damaged by ESD. Texas Instruments recommends that all integrated circuits be handled with appropriate precautions. Failure to observe proper handling and installation procedures can cause damage.

ESD damage can range from subtle performance degradation to complete device failure. Precision integrated circuits may be more susceptible to damage because very small parametric changes could cause the device not to meet its published specifications.

8.7 Glossary

TI Glossary — This glossary lists and explains terms, acronyms, and definitions.

9 Revision History

NOTE: Page numbers for previous revisions may differ from page numbers in the current version.

Changes from Revision A (April 2015) to Revision B (August 2024) — **Page**

- Updated the numbering format for tables, figures, and cross-references throughout the document 1
- Updated open-loop gain load condition in *Features* 1
- Deleted PDIP package option for quad version device 1
- Updated *Device Information* table 1
- Changed W to Ω symbol in front-page figure (typo) 1
- Updated *Pin Configuration and Functions* format 3
- Changed OPA134 pin 1 and 8 from "Offset Trim" to "NC" 3
- Changed input voltage from (V–) – 0.7V to (V+) + 0.7V to (V–) – 0.5V to (V+) + 0.5V in *Absolute Maximum Ratings* 5
- Added input current and related footnote to *Absolute Maximum Ratings* 5
- Added *Thermal Information* 6
- Updated format of *Electrical Characteristics* 7
- Updated nominal conditions in the header of *Electrical Characteristics* 7
- Changed headroom from 23.6dB to 21.3dB 7
- Deleted slew rate MIN 7
- Changed overload recovery time from 0.5µs to 0.6µs 7
- Changed input offset voltage MIN from ±0.5mV to ±1mV and MAX from ±2mV to ±3.5mV 7
- Deleted input offset voltage over temperature MAX 7
- Changed channel separation from 135dB to 128dB for dc, and from 130dB to 126dB for f = 20kHz 7
- Deleted note 3 7
- Added ± to input bias current TYP 7
- Changed common-mode voltage MAX value from (V+) – 2.5V to (V+) – 3.5V 7
- Updated common-mode rejection ratio and common-mode input impedance test conditions 7
- Changed differential input impedance from 10^{13}Ω || 2pF to 10^{13}Ω || 8pF 7
- Changed common-mode input impedance from 10^{13}Ω || 5pF to 10^{13}Ω || 6pF 7
- Deleted open-loop voltage gain for R_L = 600Ω 7
- Deleted voltage output for R_L = 600Ω 7
- Moved voltage output negative MIN values to MAX values 7
- Deleted output current 7
- Deleted note 1 from *Electrical Characteristics* 7
- Changed typos in typical characteristic graphs; corrected ohms symbol (Ω) and radical symbol (√) 9
- Changed test condition for *Typical Characteristics* from V_S = 15V to V_S = ±15V (typo) 9
- Changed Figure 26, *Small-Signal Overshoot vs Load Capacitance* into new Figures 5-23 and 5-24 9
- Deleted old Figure 20, *Output Voltage Swing vs Output Current*, Figure 21, *Offset Voltage Production Distribution*, Figure 22, *Offset Voltage Drift Production Distribution* 9
- Updated *Functional Block Diagram* 15
- Updated *Offset Voltage Trim* 16
- Updated *OPA134 Layout Example for the Noninverting Configuration* 19

Copyright © 2024 Texas Instruments Incorporated

Changes from Revision * (September 2000) to Revision A (April 2015) **Page**

- Added *ESD Ratings* table, *Feature Description* section, *Device Functional Modes*, *Application and Implementation* section, *Power Supply Recommendations* section, *Layout* section, *Device and Documentation Support* section, and *Mechanical, Packaging, and Orderable Information* section..... 1

10 Mechanical, Packaging, and Orderable Information

The following pages include mechanical, packaging, and orderable information. This information is the most current data available for the designated devices. This data is subject to change without notice and revision of this document. For browser-based versions of this data sheet, refer to the left-hand navigation.

Copyright © 2024 Texas Instruments Incorporated

PACKAGING INFORMATION

Orderable part number	Status (1)	Material type (2)	Package | Pins	Package qty | Carrier	RoHS (3)	Lead finish/ Ball material (4)	MSL rating/ Peak reflow (5)	Op temp (°C)	Part marking (6)
OPA134PA	Active	Production	PDIP (P) | 8	50 | TUBE	Yes	NIPDAU	N/A for Pkg Type	-	OPA134PA
OPA134PA.A	Active	Production	PDIP (P) | 8	50 | TUBE	Yes	NIPDAU	N/A for Pkg Type	-40 to 85	OPA134PA
OPA134UA	Active	Production	SOIC (D) | 8	75 | TUBE	Yes	NIPDAU	Level-3-260C-168 HR	-40 to 85	OPA 134UA
OPA134UA.B	Active	Production	SOIC (D) | 8	75 | TUBE	Yes	NIPDAU	Level-3-260C-168 HR	-40 to 85	OPA 134UA
OPA134UA/2K5	Active	Production	SOIC (D) | 8	2500 | LARGE T&R	Yes	NIPDAU	Level-3-260C-168 HR	-40 to 85	OPA 134UA
OPA134UA/2K5.B	Active	Production	SOIC (D) | 8	2500 | LARGE T&R	Yes	NIPDAU	Level-3-260C-168 HR	-40 to 85	OPA 134UA
OPA2134PA	Active	Production	PDIP (P) | 8	50 | TUBE	Yes	NIPDAU	N/A for Pkg Type	-40 to 85	OPA2134PA
OPA2134PA.A	Active	Production	PDIP (P) | 8	50 | TUBE	Yes	NIPDAU	N/A for Pkg Type	-40 to 85	OPA2134PA
OPA2134PAG4	Active	Production	PDIP (P) | 8	50 | TUBE	Yes	NIPDAU	N/A for Pkg Type	-40 to 85	OPA2134PA
OPA2134UA	Active	Production	SOIC (D) | 8	75 | TUBE	Yes	NIPDAU	Level-3-260C-168 HR	-40 to 85	OPA 2134UA
OPA2134UA.B	Active	Production	SOIC (D) | 8	75 | TUBE	Yes	NIPDAU	Level-3-260C-168 HR	-40 to 85	OPA 2134UA
OPA2134UA/2K5	Active	Production	SOIC (D) | 8	2500 | LARGE T&R	Yes	NIPDAU	Level-3-260C-168 HR	-40 to 85	OPA 2134UA
OPA2134UA/2K5.B	Active	Production	SOIC (D) | 8	2500 | LARGE T&R	Yes	NIPDAU	Level-3-260C-168 HR	-40 to 85	OPA 2134UA
OPA4134UA	Active	Production	SOIC (D) | 14	50 | TUBE	Yes	NIPDAU | NIPDAU	Level-3-260C-168 HR	-40 to 85	OPA4134UA
OPA4134UA.B	Active	Production	SOIC (D) | 14	50 | TUBE	Yes	NIPDAU	Level-3-260C-168 HR	-40 to 85	OPA4134UA
OPA4134UA/2K5	Active	Production	SOIC (D) | 14	2500 | LARGE T&R	Yes	NIPDAU | NIPDAU	Level-3-260C-168 HR	-40 to 85	OPA4134UA
OPA4134UA/2K5.B	Active	Production	SOIC (D) | 14	2500 | LARGE T&R	Yes	NIPDAU	Level-3-260C-168 HR	-40 to 85	OPA4134UA
SN412008DRE4	Active	Production	SOIC (D) | 8	2500 | LARGE T&R	Yes	NIPDAU	Level-3-260C-168 HR	-40 to 85	OPA 2134UA

(1) **Status:** For more details on status, see our product life cycle.

(2) **Material type:** When designated, preproduction parts are prototypes/experimental devices, and are not yet approved or released for full production. Testing and final process, including without limitation quality assurance, reliability performance testing, and/or process qualification, may not yet be complete, and this item is subject to further changes or possible discontinuation. If available for ordering, purchases will be subject to an additional waiver at checkout, and are intended for early internal evaluation purposes only. These items are sold without warranties of any kind.

(3) **RoHS values:** Yes, No, RoHS Exempt. See the TI RoHS Statement for additional information and value definition.

(4) **Lead finish/Ball material:** Parts may have multiple material finish options. Finish options are separated by a vertical ruled line. Lead finish/Ball material values may wrap to two lines if the finish value exceeds the maximum column width.

(5) **MSL rating/Peak reflow:** The moisture sensitivity level ratings and peak solder (reflow) temperatures. In the event that a part has multiple moisture sensitivity ratings, only the lowest level per JEDEC standards is shown. Refer to the shipping label for the actual reflow temperature that will be used to mount the part to the printed circuit board.

(6) **Part marking:** There may be an additional marking, which relates to the logo, the lot trace code information, or the environmental category of the part.

Multiple part markings will be inside parentheses. Only one part marking contained in parentheses and separated by a "~" will appear on a part. If a line is indented then it is a continuation of the previous line and the two combined represent the entire part marking for that device.

Important Information and Disclaimer: The information provided on this page represents TI's knowledge and belief as of the date that it is provided. TI bases its knowledge and belief on information provided by third parties, and makes no representation or warranty as to the accuracy of such information. Efforts are underway to better integrate information from third parties. TI has taken and continues to take reasonable steps to provide representative and accurate information but may not have conducted destructive testing or chemical analysis on incoming materials and chemicals. TI and TI suppliers consider certain information to be proprietary, and thus CAS numbers and other limited information may not be available for release.

In no event shall TI's liability arising out of such information exceed the total purchase price of the TI part(s) at issue in this document sold by TI to Customer on an annual basis.

TAPE AND REEL INFORMATION

REEL DIMENSIONS

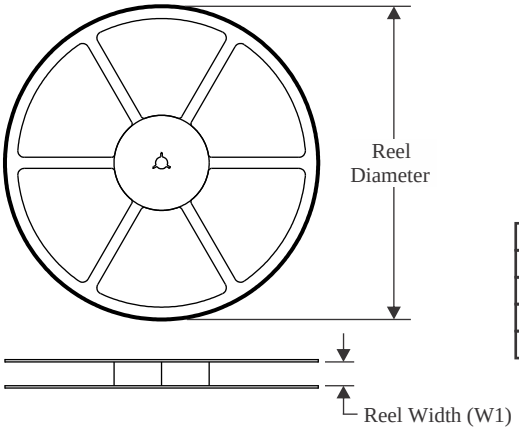

TAPE DIMENSIONS

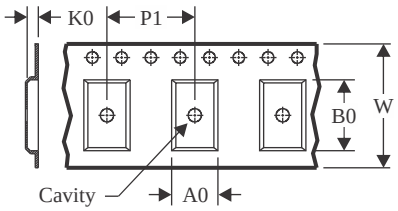

A0	Dimension designed to accommodate the component width
B0	Dimension designed to accommodate the component length
K0	Dimension designed to accommodate the component thickness
W	Overall width of the carrier tape
P1	Pitch between successive cavity centers

QUADRANT ASSIGNMENTS FOR PIN 1 ORIENTATION IN TAPE

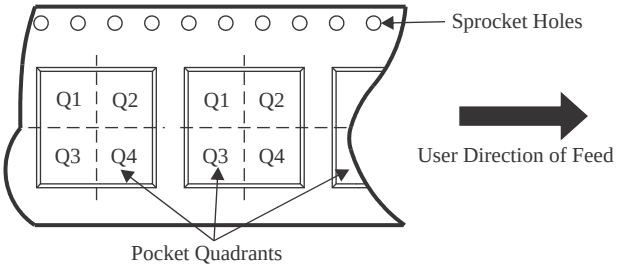

*All dimensions are nominal

Device	Package Type	Package Drawing	Pins	SPQ	Reel Diameter (mm)	Reel Width W1 (mm)	A0 (mm)	B0 (mm)	K0 (mm)	P1 (mm)	W (mm)	Pin1 Quadrant
OPA134UA/2K5	SOIC	D	8	2500	330.0	12.4	6.4	5.2	2.1	8.0	12.0	Q1
OPA134UA/2K5	SOIC	D	8	2500	330.0	12.4	6.4	5.2	2.1	8.0	12.0	Q1
OPA2134UA/2K5	SOIC	D	8	2500	330.0	12.4	6.4	5.2	2.1	8.0	12.0	Q1
OPA2134UA/2K5	SOIC	D	8	2500	330.0	12.4	6.4	5.2	2.1	8.0	12.0	Q1
OPA4134UA/2K5	SOIC	D	14	2500	330.0	16.4	6.5	9.0	2.1	8.0	16.0	Q1

TAPE AND REEL BOX DIMENSIONS

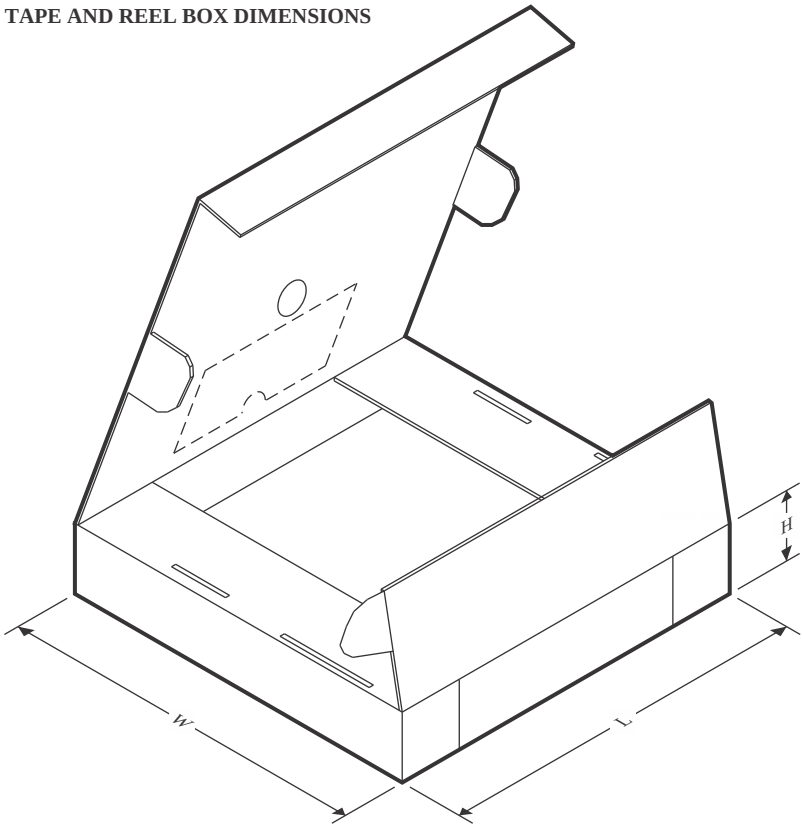

*All dimensions are nominal

Device	Package Type	Package Drawing	Pins	SPQ	Length (mm)	Width (mm)	Height (mm)
OPA134UA/2K5	SOIC	D	8	2500	356.0	356.0	35.0
OPA134UA/2K5	SOIC	D	8	2500	356.0	356.0	35.0
OPA2134UA/2K5	SOIC	D	8	2500	356.0	356.0	35.0
OPA2134UA/2K5	SOIC	D	8	2500	353.0	353.0	32.0
OPA4134UA/2K5	SOIC	D	14	2500	356.0	356.0	35.0

TUBE

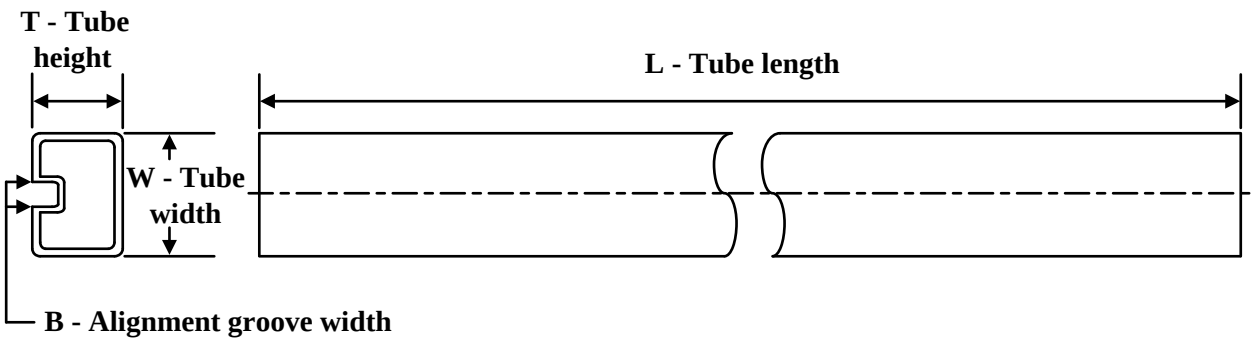

*All dimensions are nominal

Device	Package Name	Package Type	Pins	SPQ	L (mm)	W (mm)	T (µm)	B (mm)
OPA134PA	P	PDIP	8	50	506	13.97	11230	4.32
OPA134PA.A	P	PDIP	8	50	506	13.97	11230	4.32
OPA134UA	D	SOIC	8	75	506.6	8	3940	4.32
OPA134UA.B	D	SOIC	8	75	506.6	8	3940	4.32
OPA2134PA	P	PDIP	8	50	506	13.97	11230	4.32
OPA2134PA.A	P	PDIP	8	50	506	13.97	11230	4.32
OPA2134PAG4	P	PDIP	8	50	506	13.97	11230	4.32
OPA2134UA	D	SOIC	8	75	506.6	8	3940	4.32
OPA2134UA.B	D	SOIC	8	75	506.6	8	3940	4.32
OPA4134UA	D	SOIC	14	50	506.6	8	3940	4.32
OPA4134UA.B	D	SOIC	14	50	506.6	8	3940	4.32

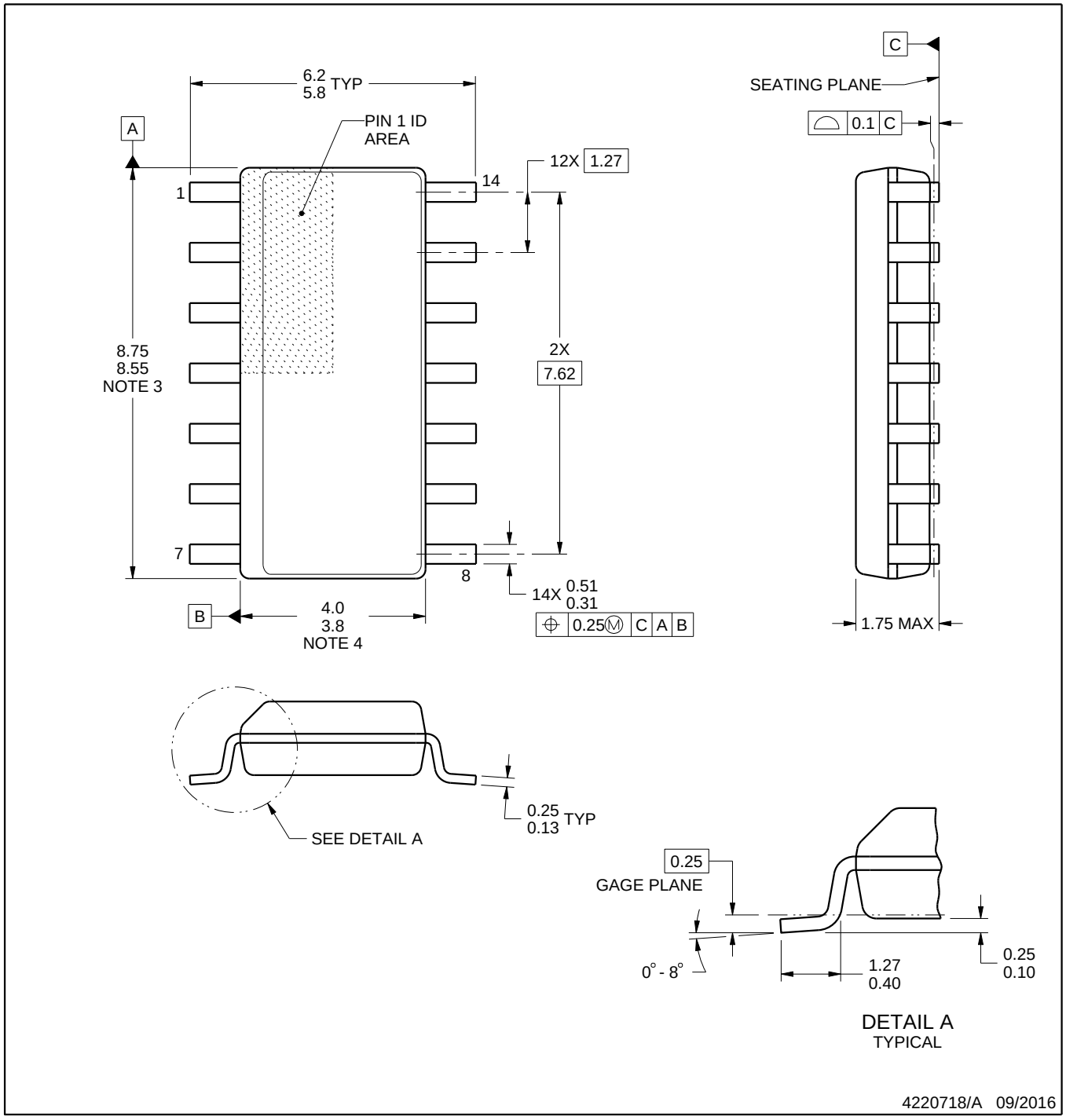

NOTES:

1. All linear dimensions are in millimeters. Dimensions in parenthesis are for reference only. Dimensioning and tolerancing per ASME Y14.5M.
2. This drawing is subject to change without notice.
3. This dimension does not include mold flash, protrusions, or gate burrs. Mold flash, protrusions, or gate burrs shall not exceed 0.15 mm, per side.
4. This dimension does not include interlead flash. Interlead flash shall not exceed 0.43 mm, per side.
5. Reference JEDEC registration MS-012, variation AB.

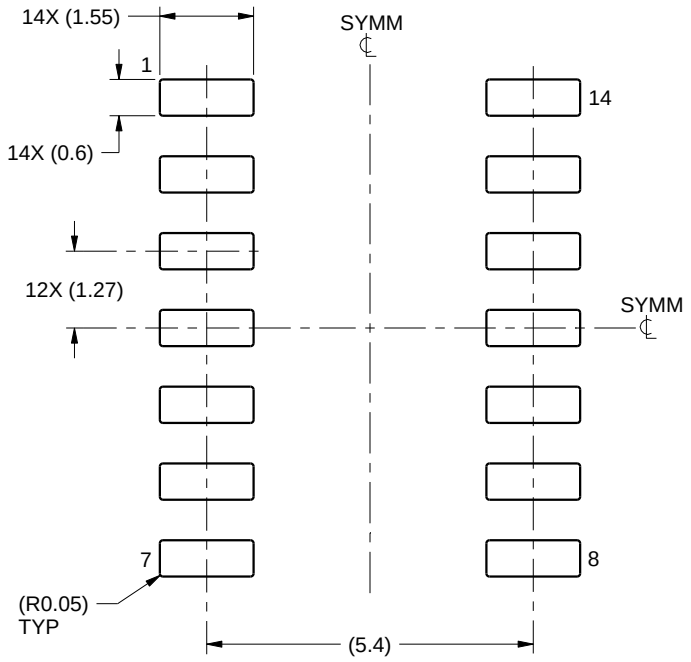

LAND PATTERN EXAMPLE
SCALE:8X

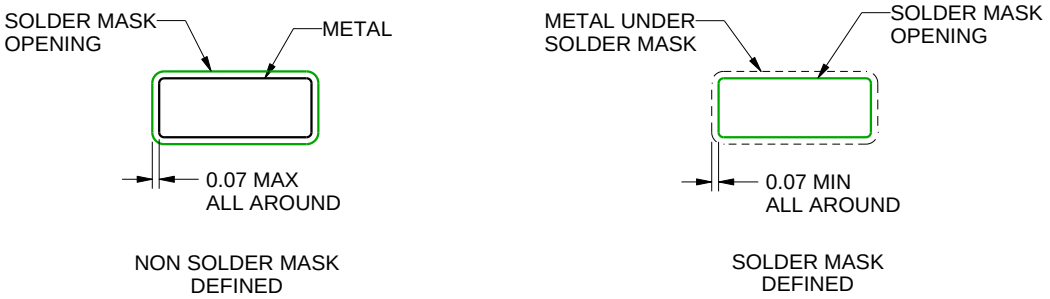

SOLDER MASK DETAILS

4220718/A 09/2016

NOTES: (continued)

6. Publication IPC-7351 may have alternate designs.
7. Solder mask tolerances between and around signal pads can vary based on board fabrication site.

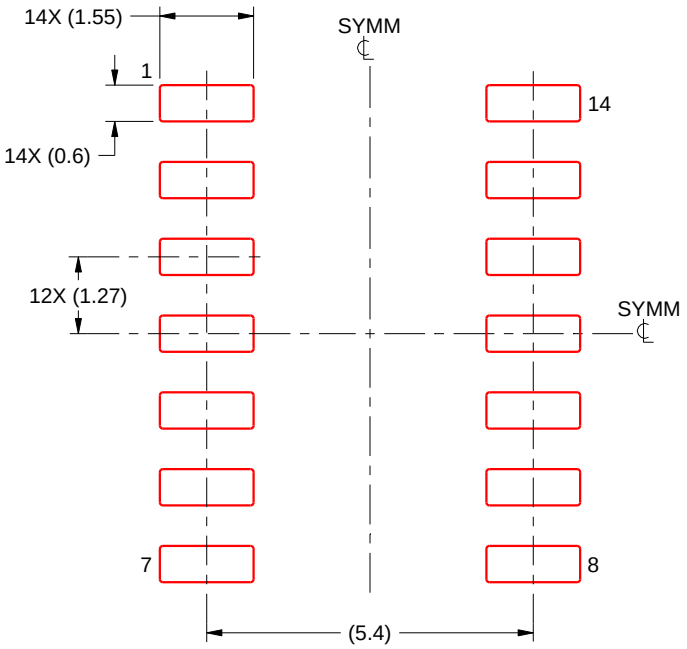

SOLDER PASTE EXAMPLE
BASED ON 0.125 mm THICK STENCIL
SCALE:8X

4220718/A 09/2016

NOTES: (continued)

8. Laser cutting apertures with trapezoidal walls and rounded corners may offer better paste release. IPC-7525 may have alternate design recommendations.
9. Board assembly site may have different recommendations for stencil design.

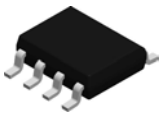

PACKAGE OUTLINE

D0008A

SOIC - 1.75 mm max height

SMALL OUTLINE INTEGRATED CIRCUIT

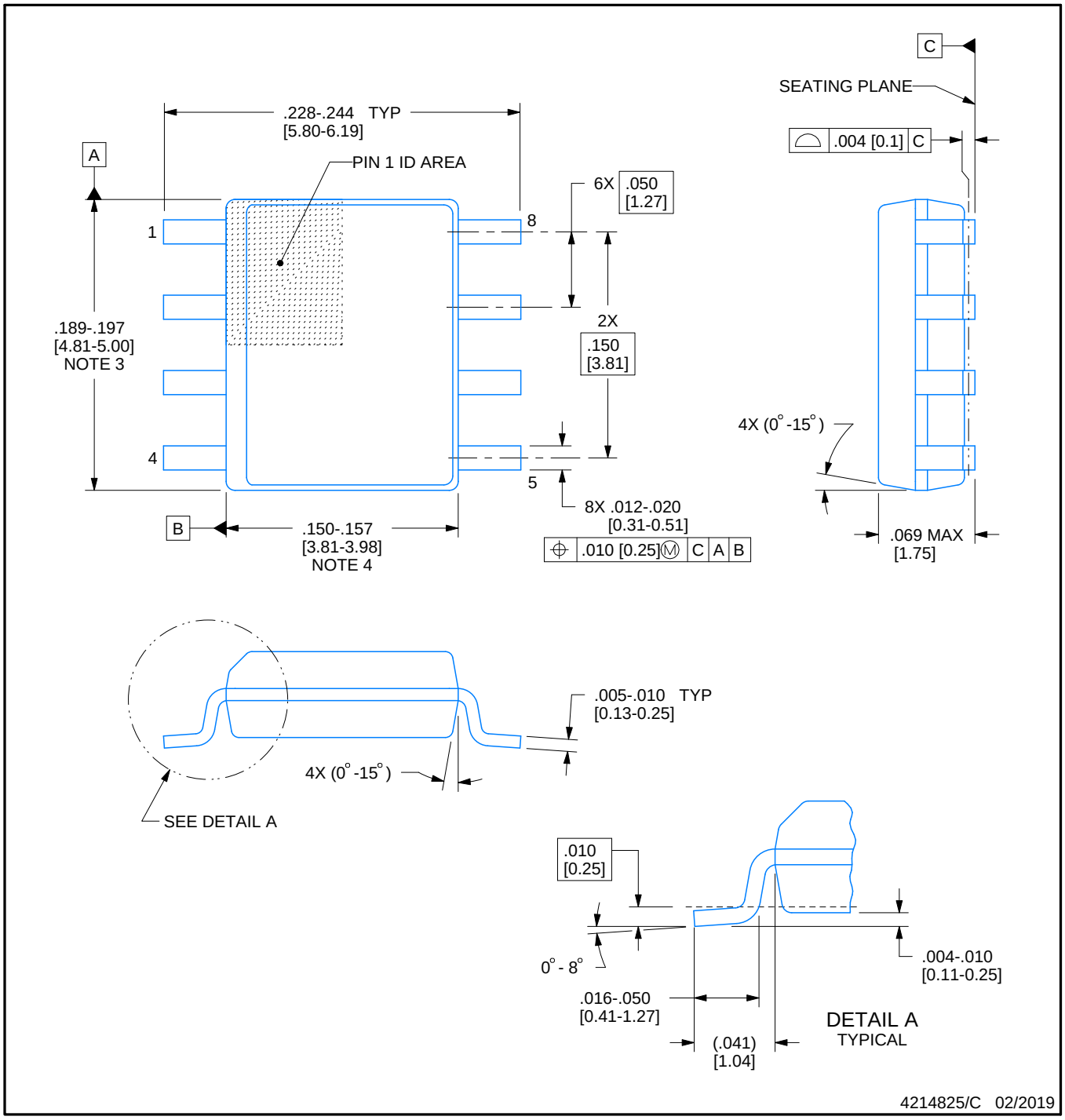

NOTES:

1. Linear dimensions are in inches [millimeters]. Dimensions in parenthesis are for reference only. Controlling dimensions are in inches. Dimensioning and tolerancing per ASME Y14.5M.
2. This drawing is subject to change without notice.
3. This dimension does not include mold flash, protrusions, or gate burrs. Mold flash, protrusions, or gate burrs shall not exceed .006 [0.15] per side.
4. This dimension does not include interlead flash.
5. Reference JEDEC registration MS-012, variation AA.

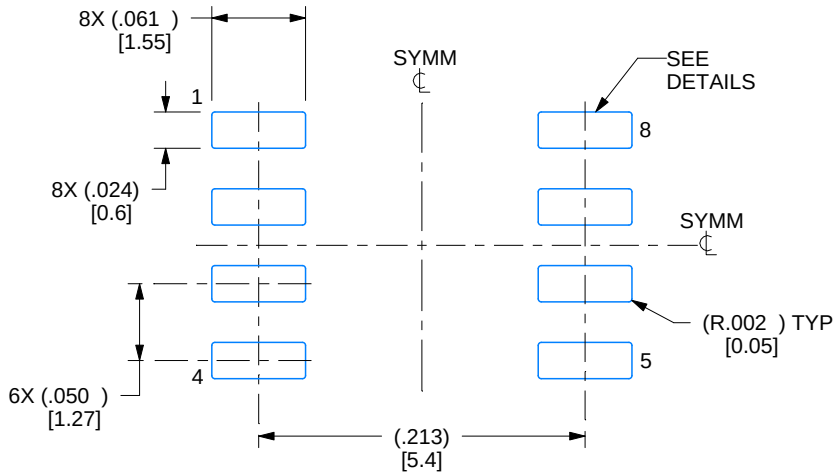

LAND PATTERN EXAMPLE
EXPOSED METAL SHOWN
SCALE:8X

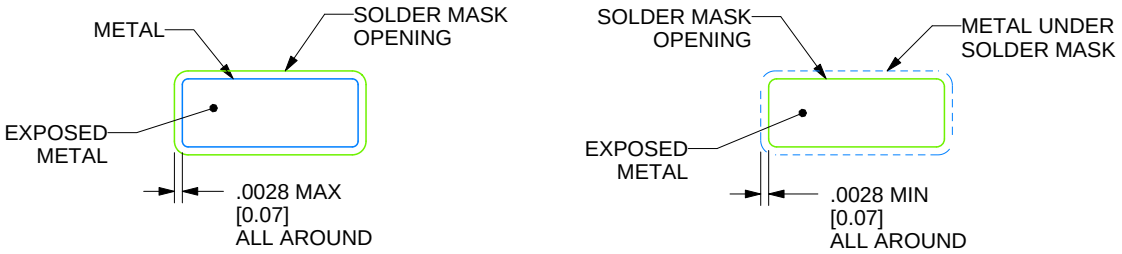

SOLDER MASK DETAILS

4214825/C 02/2019

NOTES: (continued)

6. Publication IPC-7351 may have alternate designs.
7. Solder mask tolerances between and around signal pads can vary based on board fabrication site.

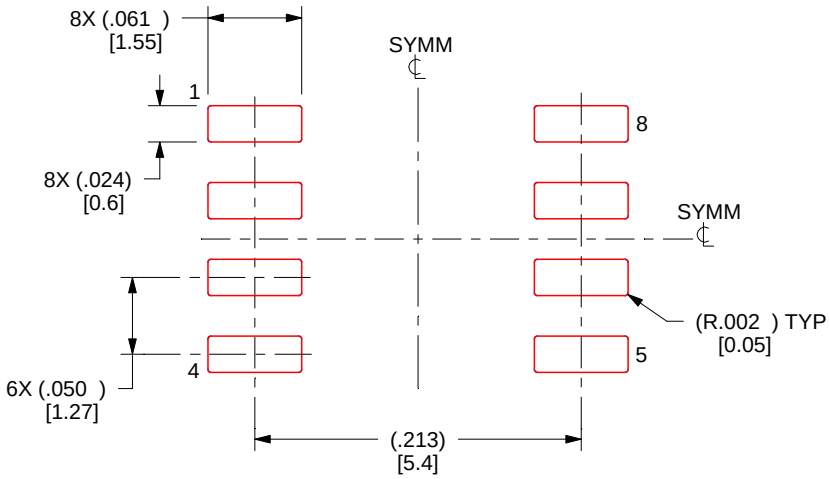

SOLDER PASTE EXAMPLE
BASED ON .005 INCH [0.125 MM] THICK STENCIL
SCALE:8X

4214825/C 02/2019

NOTES: (continued)

8. Laser cutting apertures with trapezoidal walls and rounded corners may offer better paste release. IPC-7525 may have alternate design recommendations.
9. Board assembly site may have different recommendations for stencil design.

P (R–PDIP–T8) PLASTIC DUAL–IN–LINE PACKAGE

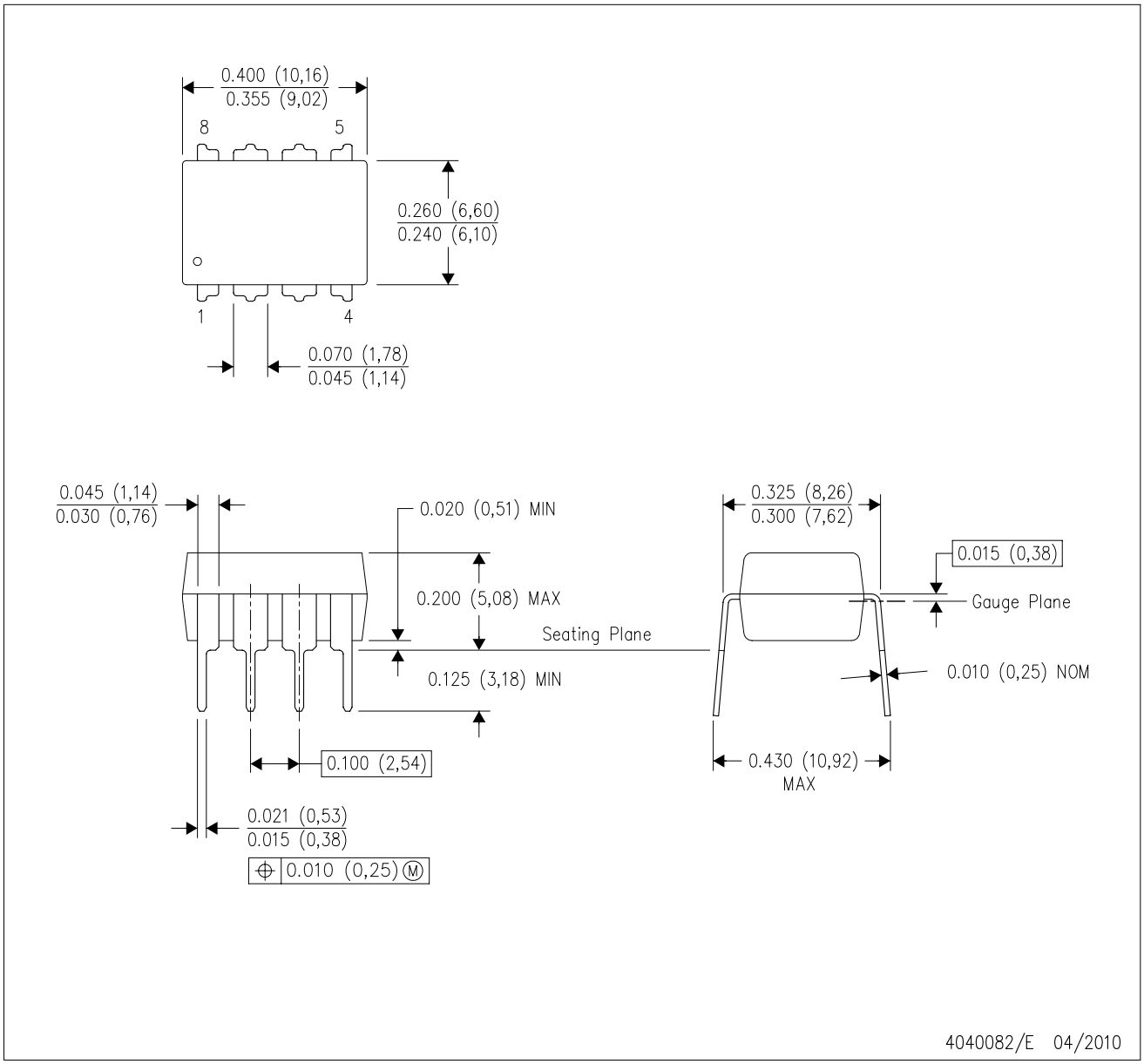

NOTES:
A. All linear dimensions are in inches (millimeters).
B. This drawing is subject to change without notice.
C. Falls within JEDEC MS–001 variation BA.

IMPORTANT NOTICE AND DISCLAIMER

TI PROVIDES TECHNICAL AND RELIABILITY DATA (INCLUDING DATA SHEETS), DESIGN RESOURCES (INCLUDING REFERENCE DESIGNS), APPLICATION OR OTHER DESIGN ADVICE, WEB TOOLS, SAFETY INFORMATION, AND OTHER RESOURCES “AS IS” AND WITH ALL FAULTS, AND DISCLAIMS ALL WARRANTIES, EXPRESS AND IMPLIED, INCLUDING WITHOUT LIMITATION ANY IMPLIED WARRANTIES OF MERCHANTABILITY, FITNESS FOR A PARTICULAR PURPOSE OR NON-INFRINGEMENT OF THIRD PARTY INTELLECTUAL PROPERTY RIGHTS.

These resources are intended for skilled developers designing with TI products. You are solely responsible for (1) selecting the appropriate TI products for your application, (2) designing, validating and testing your application, and (3) ensuring your application meets applicable standards, and any other safety, security, regulatory or other requirements.

These resources are subject to change without notice. TI grants you permission to use these resources only for development of an application that uses the TI products described in the resource. Other reproduction and display of these resources is prohibited. No license is granted to any other TI intellectual property right or to any third party intellectual property right. TI disclaims responsibility for, and you will fully indemnify TI and its representatives against, any claims, damages, costs, losses, and liabilities arising out of your use of these resources.

TI’s products are provided subject to TI’s Terms of Sale or other applicable terms available either on ti.com or provided in conjunction with such TI products. TI’s provision of these resources does not expand or otherwise alter TI’s applicable warranties or warranty disclaimers for TI products.

TI objects to and rejects any additional or different terms you may have proposed.

Mailing Address: Texas Instruments, Post Office Box 655303, Dallas, Texas 75265
Copyright © 2025, Texas Instruments Incorporated