LM2596 SIMPLE SWITCHER® Power Converter 150-kHz 3-A Step-Down Voltage Regulator

1 Features

- New product available:
  - LMR51430 4.5 to 36-V, 3-A, 500-kHz and 1.1-MHz synchronous converter
- For faster time to market:
  - TLVM13630 3 to 36-V, 3-A, 200-kHz to 2.2-MHz power module
- 3.3-V, 5-V, 12-V, and adjustable output versions
- Adjustable version output voltage range: 1.2-V to 37-V ±4% maximum over line and load conditions
- Available in TO-220 and TO-263 packages
- 3-A output load current
- Input voltage range up to 40 V
- Requires only four external components
- Excellent line and load regulation specifications
- 150-kHz fixed-frequency internal oscillator
- TTL shutdown capability
- Low power standby mode, I_Q, typically 80 µA
- High efficiency
- Uses readily available standard inductors
- Thermal shutdown and current-limit protection
- Create a custom design using the LM2596 with the WEBENCH® Power Designer

2 Applications

- Appliances
- Grid infrastructure
- EPOS
- Home theater

3 Description

The LM2596 series of regulators are monolithic integrated circuits that provide all the active functions for a step-down (buck) switching regulator, capable of driving a 3-A load with excellent line and load regulation. These devices are available in fixed output voltages of 3.3 V, 5 V, 12 V, and an adjustable output version.

Requiring a minimum number of external components, these regulators are simple to use and include internal frequency compensation, and a fixed-frequency oscillator.

The LM2596 series operates at a switching frequency of 150 kHz, thus allowing smaller sized filter components than what can be required with lower frequency switching regulators. Available in a standard 5-pin TO-220 package with several different lead bend options, and a 5-pin TO-263 surface mount package.

Package Information

PART NUMBER	PACKAGE(1)	BODY SIZE (NOM)
LM2596	NDH (TO-220, 5)	14.986 mm × 10.16 mm
	KTT (TO-263, 5)	10.10 mm × 8.89 mm

(1) For all available packages, see the orderable addendum at the end of the data sheet.

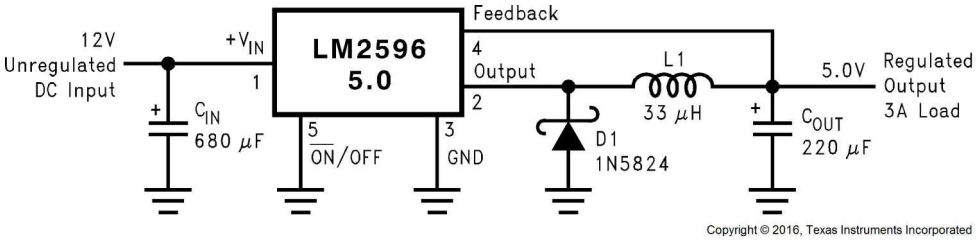

(Fixed Output Voltage Versions)

Typical Application

An IMPORTANT NOTICE at the end of this data sheet addresses availability, warranty, changes, use in safety-critical applications, intellectual property matters and other important disclaimers. PRODUCTION DATA.

Table of Contents

1 Features.....1
2 Applications.....1
3 Description.....1
4 Revision History.....2
5 Description (continued).....3
6 Pin Configuration and Functions.....4
7 Specifications.....5
7.1 Absolute Maximum Ratings.....5
7.2 ESD Ratings.....5
7.3 Operating Conditions.....5
7.4 Thermal Information.....5
7.5 Electrical Characteristics – 3.3-V Version.....6
7.6 Electrical Characteristics – 5-V Version.....6
7.7 Electrical Characteristics – 12-V Version.....6
7.8 Electrical Characteristics – Adjustable Voltage Version.....6
7.9 Electrical Characteristics – All Output Voltage Versions.....7
7.10 Typical Characteristics.....8
8 Detailed Description.....11
8.1 Overview.....11
8.2 Functional Block Diagram.....11
8.3 Feature Description.....11
8.4 Device Functional Modes.....14
9 Application and Implementation.....16
9.1 Application Information.....16
9.2 Typical Applications.....23
9.3 Power Supply Recommendations.....31
9.4 Layout.....31
10 Device and Documentation Support.....35
10.1 Device Support.....35
10.2 Receiving Notification of Documentation Updates.....35
10.3 Support Resources.....35
10.4 Trademarks.....35
10.5 Electrostatic Discharge Caution.....35
10.6 Glossary.....35
11 Mechanical, Packaging, and Orderable Information.....36

4 Revision History

NOTE: Page numbers for previous revisions may differ from page numbers in the current version.

Changes from Revision F (April 2021) to Revision G (March 2023) — **Page**

- Added link to LMR51430 and TLVM13630 product folders in the *Features* 1
- Updated trademark information..... 18

Changes from Revision E (February 2020) to Revision F (April 2021) — **Page**

- Removed reference to device comparison table..... 1
- Updated the numbering format for tables, figures, and cross-references throughout the document. 1

Changes from Revision D (May 2016) to Revision E (February 2020) — **Page**

- Added link to the LMR33630 product folder in the *Section 1* 1
- Updated *Section 3* to include the LMR33630 product page, device comparison table, and WEBENCH link 1
- Changed the package from 7 pins to 5 pins 1

Changes from Revision C (April 2013) to Revision D (February 2016) — **Page**

- Added *ESD Ratings* table, *Feature Description* section, *Device Functional Modes*, *Application and Implementation* section, *Power Supply Recommendations* section, *Layout* section, *Device and Documentation Support* section, and *Mechanical, Packaging, and Orderable Information* section..... 1
- Removed all references to design software *Switchers Made Simple* 1

Changes from Revision B (April 2013) to Revision C (April 2013) — **Page**

- Changed layout of National Semiconductor Data Sheet to TI format..... 11

Copyright © 2023 Texas Instruments Incorporated

5 Description (continued)

A standard series of inductors are available from several different manufacturers optimized for use with the LM2596 series. This feature greatly simplifies the design of switch-mode power supplies.

Other features include a ±4% tolerance on output voltage under specified input voltage and output load conditions, and ±15% on the oscillator frequency. External shutdown is included, featuring typically 80 μA standby current. Self-protection features include a two stage frequency reducing current limit for the output switch and an overtemperature shutdown for complete protection under fault conditions.

Copyright © 2023 Texas Instruments Incorporated

6 Pin Configuration and Functions

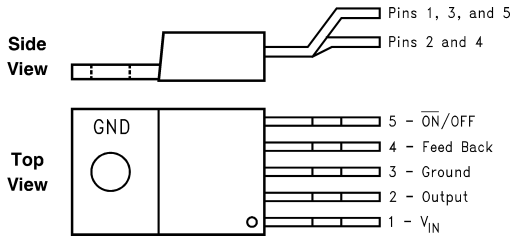

Figure 6-1. 5-Pin TO-220 NDH Package Top View

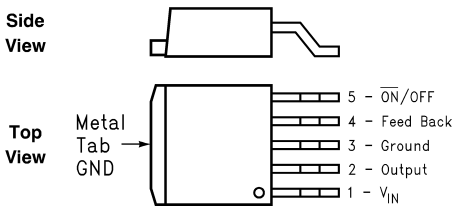

Figure 6-2. 5-Pin TO-263 KTT Package Top View

Table 6-1. Pin Functions

PIN		I/O	DESCRIPTION
NO.	NAME		
1	V_{IN}	I	This is the positive input supply for the IC switching regulator. A suitable input bypass capacitor must be present at this pin to minimize voltage transients and to supply the switching currents required by the regulator.
2	Output	O	Internal switch. The voltage at this pin switches between approximately ($+V_{IN} - V_{SAT}$) and approximately −0.5 V, with a duty cycle of V_{OUT} / V_{IN}. To minimize coupling to sensitive circuitry, the PCB copper area connected to this pin must be kept to a minimum.
3	Ground	—	Circuit ground
4	Feedback	I	Senses the regulated output voltage to complete the feedback loop.
5	$\overline{ON}$/OFF	I	Allows the switching regulator circuit to be shut down using logic signals thus dropping the total input supply current to approximately 80 µA. Pulling this pin below a threshold voltage of approximately 1.3 V turns the regulator on, and pulling this pin above 1.3 V (up to a maximum of 25 V) shuts the regulator down. If this shutdown feature is not required, the $\overline{ON}$/OFF pin can be wired to the ground pin or it can be left open. In either case, the regulator will be in the ON condition.

Copyright © 2023 Texas Instruments Incorporated

7 Specifications

7.1 Absolute Maximum Ratings

over operating free-air temperature range (unless otherwise noted)[1] [2]

			MIN	MAX	UNIT
Maximum supply voltage (V_{IN})				45	V
$\overline{SD}$/SS pin input voltage[3]				6	V
Delay pin voltage[3]				1.5	V
Flag pin voltage			–0.3	45	V
Feedback pin voltage			–0.3	25	V
Output voltage to ground, steady-state				–1	V
Power dissipation			Internally limited		
Lead temperature	KTW package	Vapor phase (60 s)		215	°C
		Infrared (10 s)		245	
	NDZ package, soldering (10 s)			260	
Maximum junction temperature				150	°C
Storage temperature, T_{stg}			–65	150	°C

(1) Stresses beyond those listed under *Absolute Maximum Ratings* may cause permanent damage to the device. These are stress ratings only, which do not imply functional operation of the device at these or any other conditions beyond those indicated under *Recommended Operating Conditions*. Exposure to absolute-maximum-rated conditions for extended periods may affect device reliability.
(2) If Military/Aerospace specified devices are required, please contact the Texas Instruments Sales Office/ Distributors for availability and specifications.
(3) Voltage internally clamped. If clamp voltage is exceeded, limit current to a maximum of 1 mA.

7.2 ESD Ratings

			VALUE	UNIT
$V_{(ESD)}$	Electrostatic discharge	Human-body model (HBM), per ANSI/ESDA/JEDEC JS-001[1]	±2000	V

(1) JEDEC document JEP155 states that 500-V HBM allows safe manufacturing with a standard ESD control process.

7.3 Operating Conditions

	MIN	MAX	UNIT
Supply voltage	4.5	40	V
Temperature	–40	125	°C

7.4 Thermal Information

THERMAL METRIC[1]			LM2596		UNIT
			KTW (TO-263)	NDZ (TO-220)	
			5 PINS	5 PINS	
$R_{\theta JA}$	Junction-to-ambient thermal resistance[2] [3]	See[4]	—	50	°C/W
		See[5]	50	—	
		See[6]	30	—	
		See[7]	20	—	
$R_{\theta JC(top)}$	Junction-to-case (top) thermal resistance		2	2	°C/W

(1) For more information about traditional and new thermal metrics, see the *Semiconductor and IC Package Thermal Metrics* application report.
(2) The package thermal impedance is calculated in accordance to JESD 51-7.
(3) Thermal Resistances were simulated on a 4-layer, JEDEC board.
(4) Junction to ambient thermal resistance (no external heat sink) for the package mounted TO-220 package mounted vertically, with the leads soldered to a printed circuit board with (1 oz.) copper area of approximately 1 in^2.
(5) Junction to ambient thermal resistance with the TO-263 package tab soldered to a single sided printed circuit board with 0.5 in^2 of 1-oz copper area.

Copyright © 2023 Texas Instruments Incorporated

(6) Junction to ambient thermal resistance with the TO-263 package tab soldered to a single sided printed circuit board with 2.5 in^2 of 1-oz copper area.
(7) Junction to ambient thermal resistance with the TO-263 package tab soldered to a double sided printed circuit board with 3 in^2 of 1-oz copper area on the LM2596S side of the board, and approximately 16 in^2 of copper on the other side of the PCB.

7.5 Electrical Characteristics – 3.3-V Version

Specifications are for T_J = 25°C (unless otherwise noted)

PARAMETER		TEST CONDITIONS		MIN(1)	TYP(2)	MAX(1)	UNIT
SYSTEM PARAMETERS (3) (see Figure 9-13 for test circuit)							
V_{OUT}	Output voltage	4.75 V ≤ V_{IN} ≤ 40 V, 0.2 A ≤ I_{LOAD} ≤ 3 A	T_J = 25°C	3.168	3.3	3.432	V
			–40°C ≤ T_J ≤ 125°C	3.135		3.465	
η	Efficiency	V_{IN} = 12 V, I_{LOAD} = 3 A			73%		

(1) All room temperature limits are 100% production tested. All limits at temperature extremes are specified via correlation using standard Statistical Quality Control (SQC) methods. All limits are used to calculate Average Outgoing Quality Level (AOQL).
(2) Typical numbers are at 25°C and represent the most likely norm.
(3) External components such as the catch diode, inductor, input and output capacitors can affect switching regulator system performance. When the LM2596 is used as shown in Figure 9-13, system performance is shown in the test conditions column.

7.6 Electrical Characteristics – 5-V Version

Specifications are for T_J = 25°C (unless otherwise noted)

PARAMETER		TEST CONDITIONS		MIN(1)	TYP(2)	MAX(1)	UNIT
SYSTEM PARAMETERS (3) (see Figure 9-13 for test circuit)							
V_{OUT}	Output voltage	7 V ≤ V_{IN} ≤ 40 V, 0.2 A ≤ I_{LOAD} ≤ 3 A	T_J = 25°C	4.8	5	5.2	V
			–40°C ≤ T_J ≤ 125°C	4.75		5.25	
η	Efficiency	V_{IN} = 12 V, I_{LOAD} = 3 A			80%		

(1) All room temperature limits are 100% production tested. All limits at temperature extremes are specified via correlation using standard Statistical Quality Control (SQC) methods. All limits are used to calculate Average Outgoing Quality Level (AOQL).
(2) Typical numbers are at 25°C and represent the most likely norm.
(3) External components such as the catch diode, inductor, input and output capacitors can affect switching regulator system performance. When the LM2596 is used as shown in Figure 9-13, system performance is shown in the test conditions column.

7.7 Electrical Characteristics – 12-V Version

Specifications are for T_J = 25°C (unless otherwise noted)

PARAMETER		TEST CONDITIONS		MIN(1)	TYP(2)	MAX(1)	UNIT
SYSTEM PARAMETERS (3) (see Figure 9-13 for test circuit)							
V_{OUT}	Output voltage	15 V ≤ V_{IN} ≤ 40 V, 0.2 A ≤ I_{LOAD} ≤ 3 A	T_J = 25°C	11.52	12	12.48	V
			–40°C ≤ T_J ≤ 125°C	11.4		12.6	
η	Efficiency	V_{IN} = 25 V, I_{LOAD} = 3 A			90%		

(1) All room temperature limits are 100% production tested. All limits at temperature extremes are specified via correlation using standard Statistical Quality Control (SQC) methods. All limits are used to calculate Average Outgoing Quality Level (AOQL).
(2) Typical numbers are at 25°C and represent the most likely norm.
(3) External components such as the catch diode, inductor, input and output capacitors can affect switching regulator system performance. When the LM2596 is used as shown in Figure 9-13, system performance is shown in the test conditions column.

7.8 Electrical Characteristics – Adjustable Voltage Version

Specifications are for T_J = 25°C (unless otherwise noted)

PARAMETER		TEST CONDITIONS		MIN(1)	TYP(2)	MAX(1)	UNIT
SYSTEM PARAMETERS (3) (see Figure 9-13 for test circuit)							
V_{FB}	Feedback voltage	4.5 V ≤ V_{IN} ≤ 40 V, 0.2 A ≤ I_{LOAD} ≤ 3 A			1.23		V
		V_{OUT} programmed for 3 V (see Figure 9-13 for test circuit)	T_J = 25°C	1.193		1.267	
			–40°C ≤ T_J ≤ 125°C	1.18		1.28	
η	Efficiency	V_{IN} = 12 V, V_{OUT} = 3 V, I_{LOAD} = 3 A			73%		

(1) All room temperature limits are 100% production tested. All limits at temperature extremes are specified via correlation using standard Statistical Quality Control (SQC) methods. All limits are used to calculate Average Outgoing Quality Level (AOQL).
(2) Typical numbers are at 25°C and represent the most likely norm.

Copyright © 2023 Texas Instruments Incorporated

(3) External components such as the catch diode, inductor, input and output capacitors can affect switching regulator system performance. When the LM2596 is used as shown in Figure 9-13, system performance is shown in the test conditions column.

7.9 Electrical Characteristics – All Output Voltage Versions

Specifications are for T_J = 25°C, I_{LOAD} = 500 mA, V_{IN} = 12 V for the 3.3-V, 5-V, and adjustable version, and V_{IN} = 24 V for the 12-V version (unless otherwise noted).

PARAMETER		TEST CONDITIONS		MIN(1)	TYP(2)	MAX(1)	UNIT
DEVICE PARAMETERS							
I_b	Feedback bias current	Adjustable version only, V_{FB} = 1.3 V	T_J = 25°C		10	50	nA
			–40°C ≤ T_J ≤ 125°C			100	
f_O	Oscillator frequency(3)	T_J = 25°C		127	150	173	kHz
		–40°C ≤ T_J ≤ 125°C		110		173	
V_{SAT}	Saturation voltage(4) (5)	I_{OUT} = 3 A	T_J = 25°C		1.16	1.4	V
			–40°C ≤ T_J ≤ 125°C			1.5	
DC	Max duty cycle (ON)(5)				100%		
	Min duty cycle (OFF)(6)				0%		
I_{CL}	Current limit(4) (5)	Peak current	T_J = 25°C	3.6	4.5	6.9	A
			–40°C ≤ T_J ≤ 125°C	3.4		7.5	
I_L	Output leakage current(4) (6)	Output = 0 V, V_{IN} = 40 V				50	µA
		Output = –1 V			2	30	mA
I_Q	Operating quiescent current(6)	See (6)			5	10	mA
I_{STBY}	Current standby quiescent	$\overline{ON}$/OFF pin = 5 V (OFF)(7)	T_J = 25°C		80	200	µA
			–40°C ≤ T_J ≤ 125°C			250	µA
SHUTDOWN/SOFT-START CONTROL (see Figure 9-13 for test circuit)							
V_{IH}	$\overline{ON}$/OFF pin logic input threshold voltage	Low (regulator ON)	T_J = 25°C		1.3		V
			–40°C ≤ T_J ≤ 125°C			0.6	
V_{IL}		High (regulator OFF)	T_J = 25°C		1.3		V
			–40°C ≤ T_J ≤ 125°C	2			
I_H	$\overline{ON}$/OFF pin input current	V_{LOGIC} = 2.5 V (regulator OFF)			5	15	µA
I_L		V_{LOGIC} = 0.5 V (regulator ON)			0.02	5	µA

(1) All room temperature limits are 100% production tested. All limits at temperature extremes are specified via correlation using standard Statistical Quality Control (SQC) methods. All limits are used to calculate Average Outgoing Quality Level (AOQL).
(2) Typical numbers are at 25°C and represent the most likely norm.
(3) The switching frequency is reduced when the second stage current limit is activated. The amount of reduction is determined by the severity of current overload.
(4) No diode, inductor, or capacitor connected to output pin.
(5) Feedback pin removed from output and connected to 0 V to force the output transistor switch ON.
(6) Feedback pin removed from output and connected to 12 V for the 3.3-V, 5-V, and the adjustable versions, and 15 V for the 12-V version, to force the output transistor switch OFF.
(7) V_{IN} = 40 V.

Copyright © 2023 Texas Instruments Incorporated

7.10 Typical Characteristics

See Figure 9-13 for test circuit

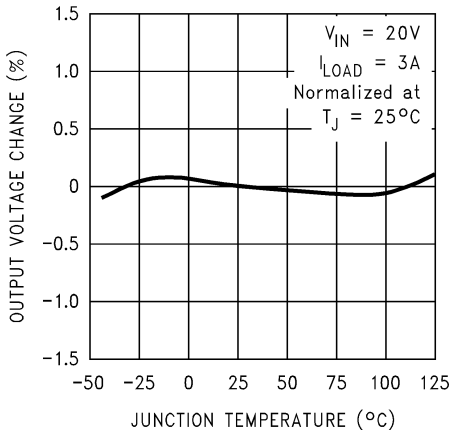

Figure 7-1. Normalized Output Voltage

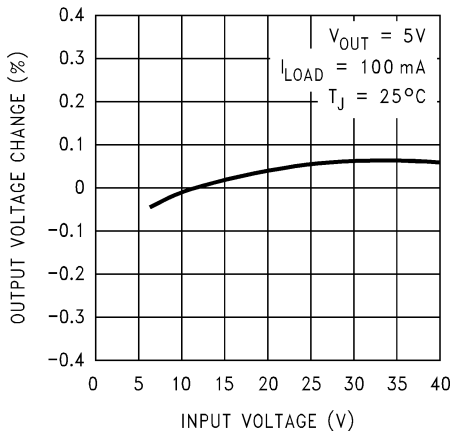

Figure 7-2. Line Regulation

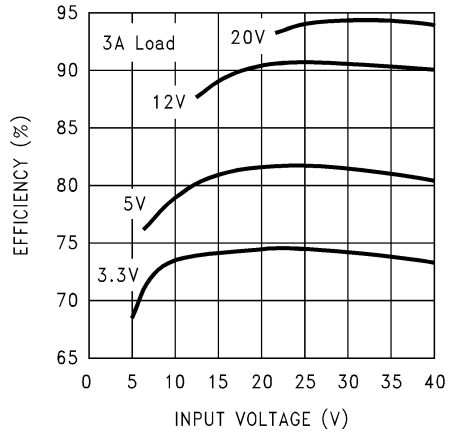

Figure 7-3. Efficiency

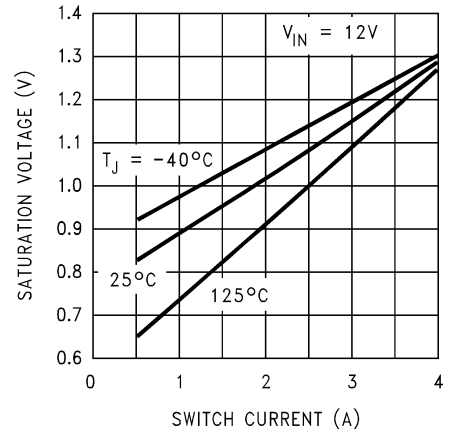

Figure 7-4. Switch Saturation Voltage

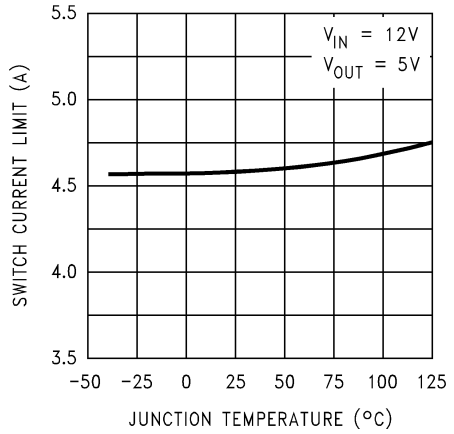

Figure 7-5. Switch Current Limit

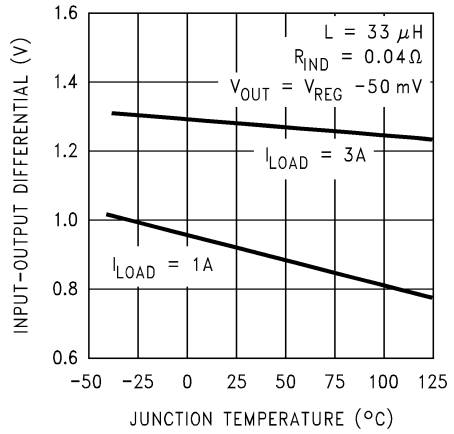

Figure 7-6. Dropout Voltage

Copyright © 2023 Texas Instruments Incorporated

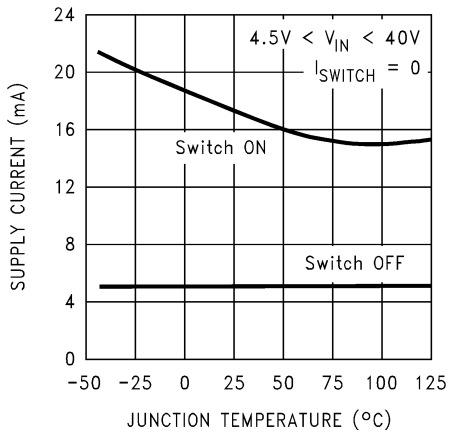

Figure 7-7. Operating Quiescent Current

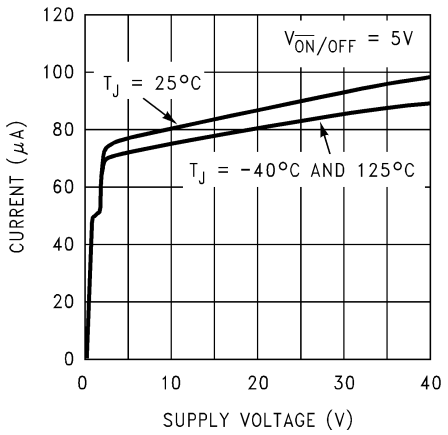

Figure 7-8. Shutdown Quiescent Current

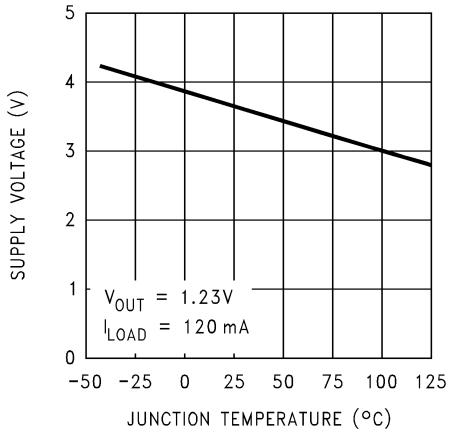

Figure 7-9. Minimum Operating Supply Voltage

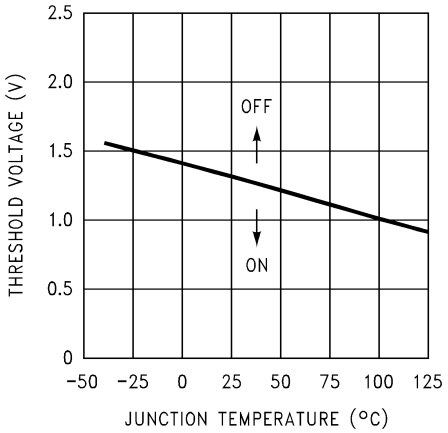

Figure 7-10. $\overline{ON}$/OFF Threshold Voltage

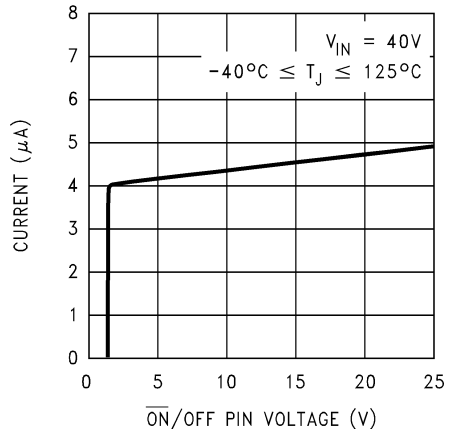

Figure 7-11. $\overline{ON}$/OFF Pin Current (Sinking)

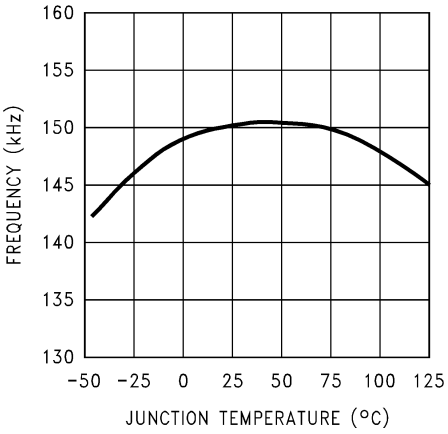

Figure 7-12. Switching Frequency

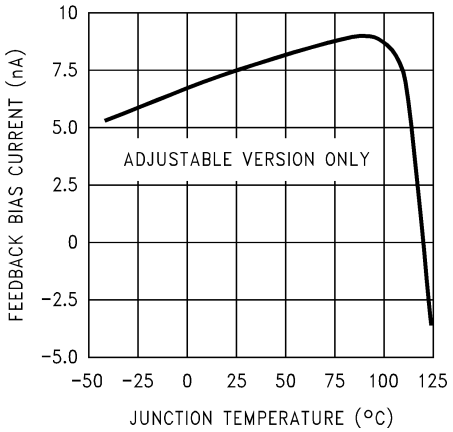

Figure 7-13. Feedback Pin Bias Current

Copyright © 2023 Texas Instruments Incorporated

8 Detailed Description

8.1 Overview

The LM2596 SIMPLE SWITCHER® power converter regulator is an easy-to-use, nonsynchronous, step-down DC-DC converter with a wide input voltage range up to 40 V. The regulator is capable of delivering up to 3-A DC load current with excellent line and load regulation. These devices are available in fixed output voltages of 3.3-V, 5-V, 12-V, and an adjustable output version. The family requires few external components, and the pin arrangement was designed for simple, optimum PCB layout.

8.2 Functional Block Diagram

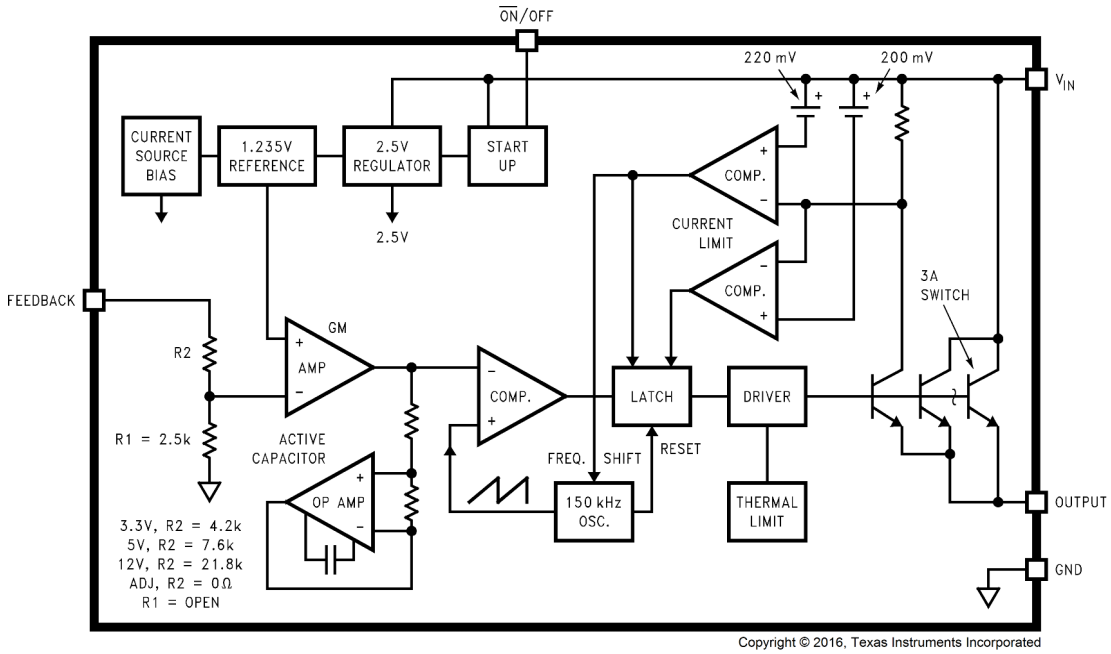

8.3 Feature Description

8.3.1 Delayed Start-Up

The circuit in Figure 8-1 uses the $\overline{ON}$/OFF pin to provide a time delay between the time the input voltage is applied and the time the output voltage comes up (only the circuitry pertaining to the delayed start-up is shown). As the input voltage rises, the charging of capacitor C1 pulls the $\overline{ON}$/OFF pin high, keeping the regulator OFF. After the input voltage reaches its final value and the capacitor stops charging, resistor R_2 pulls the $\overline{ON}$/OFF pin low, thus allowing the circuit to start switching. Resistor R_1 is included to limit the maximum voltage applied to the $\overline{ON}$/OFF pin (maximum of 25 V), reduces power supply noise sensitivity, and also limits the capacitor C1 discharge current. When high input ripple voltage exists, avoid long delay time, because this ripple can be coupled into the $\overline{ON}$/OFF pin and cause problems.

This delayed start-up feature is useful in situations where the input power source is limited in the amount of current it can deliver. It allows the input voltage to rise to a higher voltage before the regulator starts operating. Buck regulators require less input current at higher input voltages.

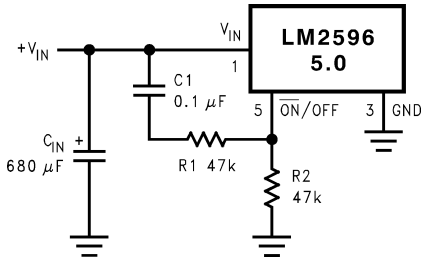

Figure 8-1. Delayed Start-Up

8.3.2 Undervoltage Lockout

Some applications require the regulator to remain off until the input voltage reaches a predetermined voltage. Figure 8-2 shows an undervoltage lockout feature applied to a buck regulator, while Figure 8-3 and Figure 8-4 apply the same feature to an inverting circuit. The circuit in Figure 8-3 features a constant threshold voltage for turnon and turnoff (Zener voltage plus approximately one volt). If hysteresis is required, the circuit in Figure 8-4 has a turnon voltage which is different than the turnoff voltage. The amount of hysteresis is approximately equal to the value of the output voltage. If Zener voltages greater than 25 V are used, an additional 47-kΩ resistor is required from the $\overline{\text{ON}}$/OFF pin to the ground pin to stay within the 25 V maximum limit of the $\overline{\text{ON}}$/OFF pin.

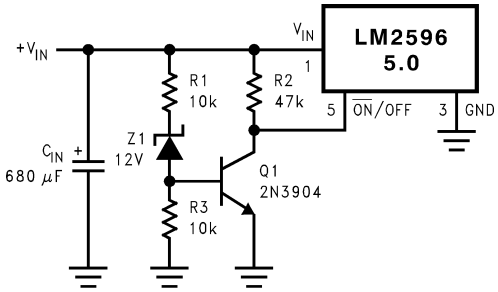

Figure 8-2. Undervoltage Lockout for Buck Regulator

8.3.3 Inverting Regulator

The circuit in Figure 8-5 converts a positive input voltage to a negative output voltage with a common ground. The circuit operates by bootstrapping the ground pin of the regulator to the negative output voltage, then grounding the feedback pin, the regulator senses the inverted output voltage and regulates it.

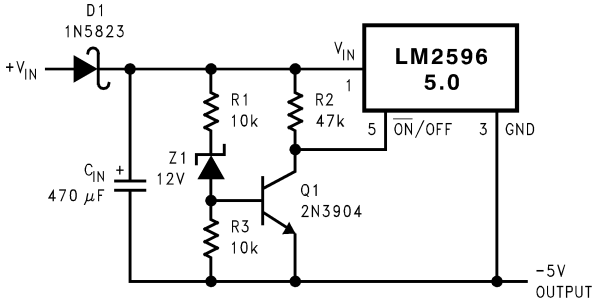

This circuit has an $\overline{\text{ON}}$/OFF threshold of approximately 13 V.

Figure 8-3. Undervoltage Lockout for Inverting Regulator

This example uses the LM2596-5.0 to generate a −5-V output, but other output voltages are possible by selecting other output voltage versions, including the adjustable version. Because this regulator topology can produce an output voltage that is either greater than or less than the input voltage, the maximum output current greatly depends on both the input and output voltage. Figure 8-6 provides a guide as to the amount of output load current possible for the different input and output voltage conditions.

Copyright © 2023 Texas Instruments Incorporated

The maximum voltage appearing across the regulator is the absolute sum of the input and output voltage, and this must be limited to a maximum of 40 V. For example, when converting +20 V to −12 V, the regulator can see 32 V between the input pin and ground pin. The LM2596 has a maximum input voltage spec of 40 V.

Additional diodes are required in this regulator configuration. Diode D1 is used to isolate input voltage ripple or noise from coupling through the C_{IN} capacitor to the output, under light or no load conditions. Also, this diode isolation changes the topology to closely resemble a buck configuration, thus providing good closed-loop stability. TI recommends using a Schottky diode for low input voltages, (because of its lower voltage drop) but for higher input voltages, a fast recovery diode can be used.

Without diode D3, when the input voltage is first applied, the charging current of C_{IN} can pull the output positive by several volts for a short period of time. Adding D3 prevents the output from going positive by more than a diode voltage.

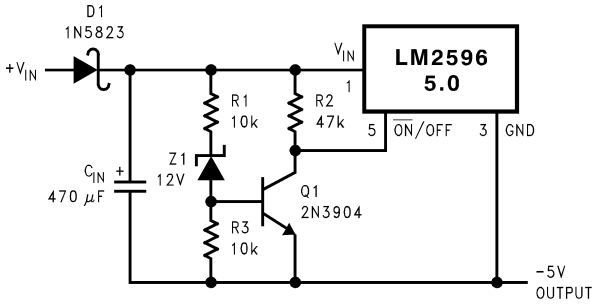

This circuit has hysteresis Regulator starts switching at V_{IN} = 13 V Regulator stops switching at V_{IN} = 8 V

Figure 8-4. Undervoltage Lockout With Hysteresis for Inverting Regulator

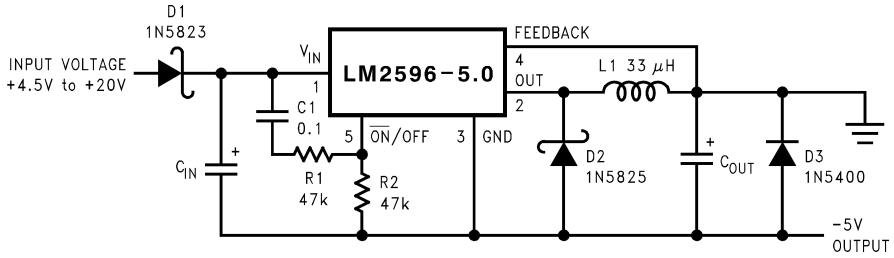

C_{IN} — 68-µF, 25-V Tant. Sprague 595D 470 -µF, 50-V Elec. Panasonic HFQ C_{OUT} — 47-µF, 20-V Tant. Sprague 595D 220-µF, 25-V Elec. Panasonic HFQ

Figure 8-5. Inverting −5-V Regulator With Delayed Start-Up

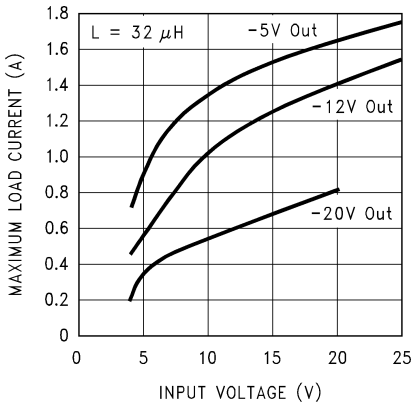

Figure 8-6. Inverting Regulator Typical Load Current

Because of differences in the operation of the inverting regulator, the standard design procedure is not used to select the inductor value. In the majority of designs, a 33-µH, 3.5-A inductor is the best choice. Capacitor

selection can also be narrowed down to just a few values. Using the values shown in Figure 8-5 will provide good results in the majority of inverting designs.

This type of inverting regulator can require relatively large amounts of input current when starting up, even with light loads. Input currents as high as the LM2596 current limit (approximately 4.5 A) are required for at least 2 ms or more, until the output reaches its nominal output voltage. The actual time depends on the output voltage and the size of the output capacitor. Input power sources that are current limited or sources that can not deliver these currents without getting loaded down, can not work correctly. Because of the relatively high start-up currents required by the inverting topology, TI recommends the delayed start-up feature (C1, R_1, and R_2) shown in Figure 8-5. By delaying the regulator start-up, the input capacitor is allowed to charge up to a higher voltage before the switcher begins operating. A portion of the high input current required for start-up is now supplied by the input capacitor (C_{IN}). For severe start-up conditions, the input capacitor can be made much larger than normal.

8.3.4 Inverting Regulator Shutdown Methods

Using the $\overline{ON}$/OFF pin in a standard buck configuration is simple. To turn the regulator ON, pull the $\overline{ON}$/OFF pin below 1.3 V (at 25°C, referenced to ground). To turn the regulator OFF, pull the $\overline{ON}$/OFF pin above 1.3 V. With the inverting configuration, some level shifting is required, because the ground pin of the regulator is no longer at ground, but is now setting at the negative output voltage level. Two different shutdown methods for inverting regulators are shown in Figure 8-7 and Figure 8-8.

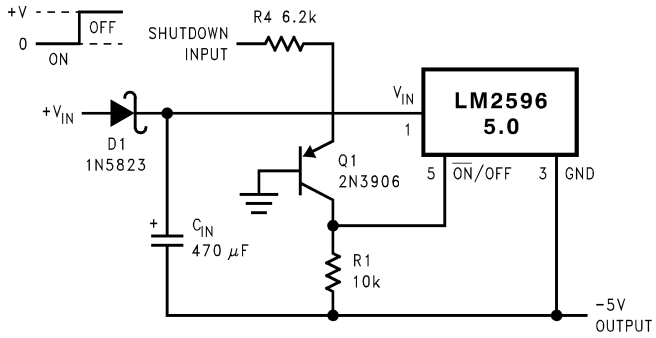

Figure 8-7. Inverting Regulator Ground Referenced Shutdown

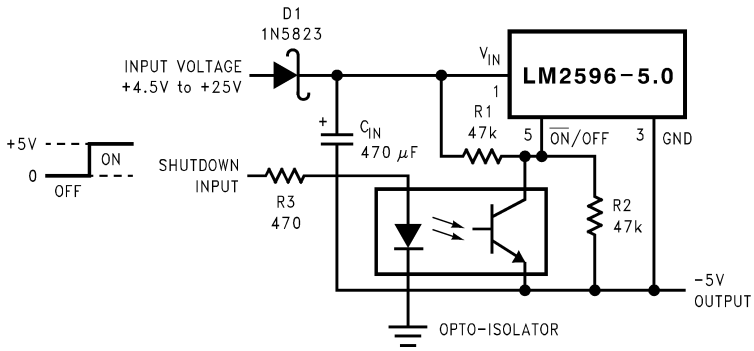

Figure 8-8. Inverting Regulator Ground Referenced Shutdown Using Opto Device

8.4 Device Functional Modes

8.4.1 Discontinuous Mode Operation

The selection guide chooses inductor values suitable for continuous mode operation, but for low current applications or high input voltages, a discontinuous mode design can be a better choice. A discontinuous mode design can use an inductor that can be physically smaller, and can require only one half to one third the inductance value required for a continuous mode design. The peak switch and inductor currents will be higher in a discontinuous design, but at these low load currents (1 A and below), the maximum switch current will still be less than the switch current limit.

Copyright © 2023 Texas Instruments Incorporated

Discontinuous operation can have voltage waveforms that are considerably different than a continuous design. The output pin (switch) waveform can have some damped sinusoidal ringing present (see Figure 9-14). This ringing is normal for discontinuous operation, and is not caused by feedback loop instabilities. In discontinuous operation, there is a period of time where neither the switch nor the diode are conducting, and the inductor current has dropped to zero. During this time, a small amount of energy can circulate between the inductor and the switch/diode parasitic capacitance causing this characteristic ringing. Normally this ringing is not a problem, unless the amplitude becomes great enough to exceed the input voltage, and even then, there is very little energy present to cause damage.

Different inductor types or core materials produce different amounts of this characteristic ringing. Ferrite core inductors have very little core loss and therefore produce the most ringing. The higher core loss of powdered iron inductors produce less ringing. If desired, a series RC can be placed in parallel with the inductor to dampen the ringing.

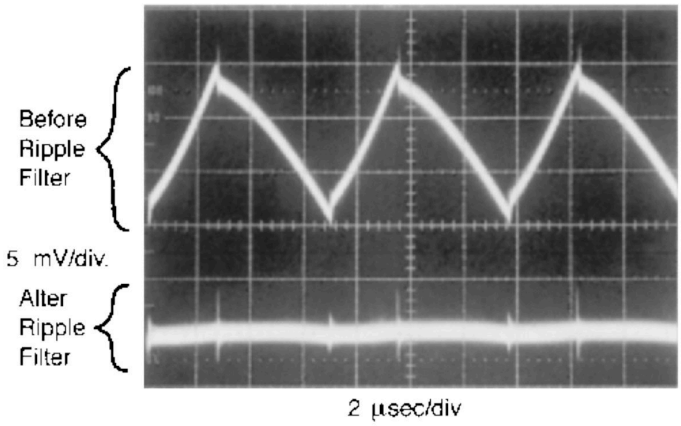

Figure 8-9. Post Ripple Filter Waveform

9 Application and Implementation

Note

Information in the following applications sections is not part of the TI component specification, and TI does not warrant its accuracy or completeness. TI's customers are responsible for determining suitability of components for their purposes, as well as validating and testing their design implementation to confirm system functionality.

9.1 Application Information

9.1.1 Input Capacitor (C_{IN})

A low ESR aluminum or tantalum bypass capacitor is required between the input pin and ground pin. It must be placed near the regulator using short leads. This capacitor prevents large voltage transients from occurring at the input, and provides the instantaneous current required each time the switch turns ON.

The important parameters for the input capacitor are the voltage rating and the RMS current rating. Because of the relatively high RMS currents flowing in a input capacitor of the buck converter, this capacitor must be chosen for its RMS current rating rather than its capacitance or voltage ratings, although the capacitance value and voltage rating are directly related to the RMS current rating.

The RMS current rating of a capacitor can be viewed as a power rating of the capacitor. The RMS current flowing through the capacitors internal ESR produces power which causes the internal temperature of the capacitor to rise. The RMS current rating of a capacitor is determined by the amount of current required to raise the internal temperature approximately 10°C above an ambient temperature of 105°C. The ability of the capacitor to dissipate this heat to the surrounding air will determine the amount of current the capacitor can safely sustain. For a given capacitor value, a higher voltage electrolytic capacitor is physically larger than a lower voltage capacitor, and thus be able to dissipate more heat to the surrounding air, and therefore will have a higher RMS current rating.

The consequences of operating an electrolytic capacitor above the RMS current rating is a shortened operating life. The higher temperature speeds up the evaporation of the capacitor electrolyte, resulting in eventual failure.

Selecting an input capacitor requires consulting the manufacturers data sheet for maximum allowable RMS ripple current. For a maximum ambient temperature of 40°C, a general guideline can be to select a capacitor with a ripple current rating of approximately 50% of the DC load current. For ambient temperatures up to 70°C, a current rating of 75% of the DC load current can be a good choice for a conservative design. The capacitor voltage rating must be at least 1.25 times greater than the maximum input voltage, and often a much higher voltage capacitor is required to satisfy the RMS current requirements.

Figure 9-1 shows the relationship between an electrolytic capacitor value, its voltage rating, and the RMS current it is rated for. These curves were obtained from the Nichicon *PL* series of low-ESR, high-reliability electrolytic capacitors designed for switching regulator applications. Other capacitor manufacturers offer similar types of capacitors, but always check the capacitor data sheet.

Standard electrolytic capacitors typically have much higher ESR numbers, lower RMS current ratings and typically have a shorter operating lifetime.

Because of their small size and excellent performance, surface-mount solid tantalum capacitors are often used for input bypassing, but several precautions must be observed. A small percentage of solid tantalum capacitors can short if the inrush current rating is exceeded. This can happen at turnon when the input voltage is suddenly applied, and of course, higher input voltages produce higher inrush currents. Several capacitor manufacturers do a 100% surge current testing on their products to minimize this potential problem. If high turnon currents are expected, it can be necessary to limit this current by adding either some resistance or inductance before the tantalum capacitor, or select a higher voltage capacitor. As with aluminum electrolytic capacitors, the RMS ripple current rating must be sized to the load current.

Copyright © 2023 Texas Instruments Incorporated

9.1.2 Feedforward Capacitor (C_{FF})

Note

For adjustable output voltage version only.

A feedforward capacitor, shown across R2 in Table 9-6, is used when the output voltage is greater than 10 V or when C_{OUT} has a very low ESR. This capacitor adds lead compensation to the feedback loop and increases the phase margin for better loop stability. For C_{FF} selection, see the *Section 9.2.2.2* section.

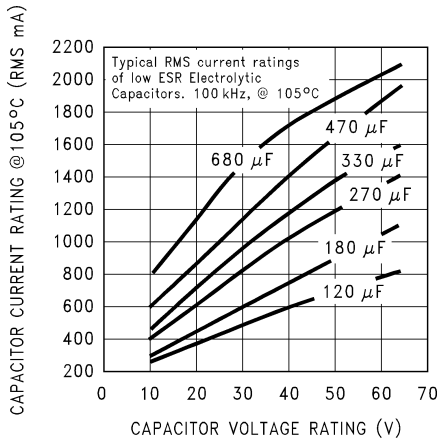

Figure 9-1. RMS Current Ratings for Low ESR Electrolytic Capacitors (Typical)

9.1.3 Output Capacitor (C_{OUT})

An output capacitor is required to filter the output and provide regulator loop stability. Low impedance or low-ESR electrolytic or solid tantalum capacitors designed for switching regulator applications must be used. When selecting an output capacitor, the important capacitor parameters are the 100-kHz ESR, the RMS ripple current rating, voltage rating, and capacitance value. For the output capacitor, the ESR value is the most important parameter.

The output capacitor requires an ESR value that has an upper and lower limit. For low output ripple voltage, a low ESR value is required. This value is determined by the maximum allowable output ripple voltage, typically 1% to 2% of the output voltage. But if the selected capacitor ESR is extremely low, there is a possibility of an unstable feedback loop, resulting in an oscillation at the output. Using the capacitors listed in the tables, or similar types, will provide design solutions under all conditions.

If very low output ripple voltage (less than 15 mV) is required, see *Section 9.1.6* for a post ripple filter.

An ESR value of the aluminum electrolytic capacitor is related to the capacitance value and its voltage rating. In most cases, higher voltage electrolytic capacitors have lower ESR values (see Figure 9-2). Often, capacitors with much higher voltage ratings can be required to provide the low ESR values required for low output ripple voltage.

The output capacitor for many different switcher designs often can be satisfied with only three or four different capacitor values and several different voltage ratings. See Table 9-3 and Table 9-4 for typical capacitor values, voltage ratings, and manufacturers capacitor types.

TI does not recommend electrolytic capacitors for temperatures below −25°C. The ESR rises dramatically at cold temperatures and is typically three times as large at −25°C and as much as 10 times as large at −40°C. See Figure 9-3.

Solid tantalum capacitors have a much better ESR specifications for cold temperatures and TI recommends them for temperatures below −25°C.

Copyright © 2023 Texas Instruments Incorporated

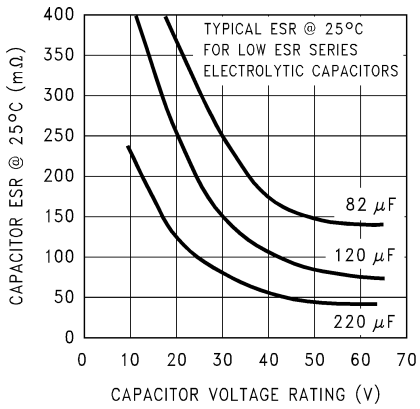

Figure 9-2. Capacitor ESR versus Capacitor Voltage Rating (Typical Low-ESR Electrolytic Capacitor)

9.1.4 Catch Diode

Buck regulators require a diode to provide a return path for the inductor current when the switch turns off. This must be a fast diode and must be placed close to the LM2596 using short leads and short printed-circuit traces.

Because of their very fast switching speed and low forward voltage drop, Schottky diodes provide the best performance, especially in low output voltage applications (5 V and lower). Ultra-fast recovery, or high-efficiency rectifiers are also a good choice, but some types with an abrupt turnoff characteristic can cause instability or EMI problems. Ultra-fast recovery diodes typically have reverse recovery times of 50 ns or less. Rectifiers such as the 1N5400 series are much too slow and must not be used.

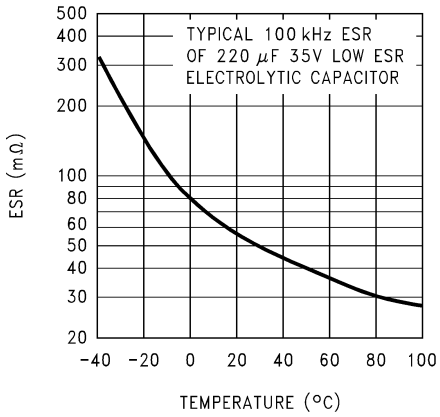

Figure 9-3. Capacitor ESR Change versus Temperature

9.1.5 Inductor Selection

All switching regulators have two basic modes of operation; continuous and discontinuous. The difference between the two types relates to the inductor current, whether it is flowing continuously, or if it drops to zero for a period of time in the normal switching cycle. Each mode has distinctively different operating characteristics, which can affect the regulators performance and requirements. Most switcher designs will operate in the discontinuous mode when the load current is low.

The LM2596 (or any of the SIMPLE SWITCHER power converter family) can be used for both continuous or discontinuous modes of operation.

In many cases the preferred mode of operation is the continuous mode, which offers greater output power, lower peak switch, lower inductor and diode currents, and can have lower output ripple voltage. However, the continuous mode does require larger inductor values to keep the inductor current flowing continuously, especially at low output load currents or high input voltages.

Copyright © 2023 Texas Instruments Incorporated

To simplify the inductor selection process, an inductor selection guide (nomograph) was designed (see Figure 9-5 through Figure 9-8). This guide assumes that the regulator is operating in the continuous mode, and selects an inductor that will allow a peak-to-peak inductor ripple current to be a certain percentage of the maximum design load current. This peak-to-peak inductor ripple current percentage is not fixed, but is allowed to change as different design load currents are selected (see Figure 9-4.)

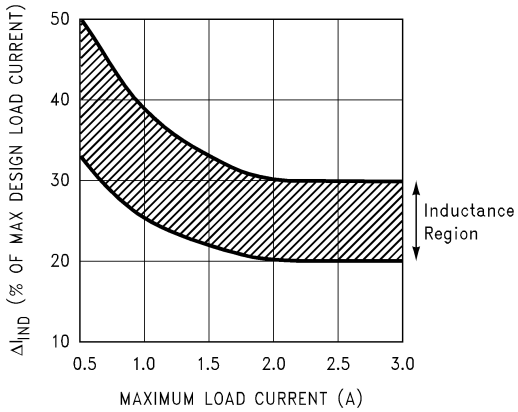

Figure 9-4. (ΔI_{IND}) Peak-to-Peak Inductor Ripple Current (as a Percentage of the Load Current) versus Load Current

By allowing the percentage of inductor ripple current to increase for low load currents, the inductor value and size can be kept relatively low.

When operating in the continuous mode, the inductor current waveform ranges from a triangular to a sawtooth type of waveform (depending on the input voltage), with the average value of this current waveform equal to the DC output load current.

Inductors are available in different styles such as pot core, toroid, E-core, bobbin core, and so forth, as well as different core materials, such as ferrites and powdered iron. The least expensive, the bobbin, rod or stick core, consists of wire wound on a ferrite bobbin. This type of construction makes for an inexpensive inductor, but because the magnetic flux is not completely contained within the core, it generates more Electro-Magnetic Interference (EMI). This magnetic flux can induce voltages into nearby printed-circuit traces, thus causing problems with both the switching regulator operation and nearby sensitive circuitry, and can give incorrect scope readings because of induced voltages in the scope probe (see *Section 9.1.7*).

When multiple switching regulators are located on the same PCB, open-core magnetics can cause interference between two or more of the regulator circuits, especially at high currents. A torroid or E-core inductor (closed magnetic structure) must be used in these situations.

The inductors listed in the selection chart include ferrite E-core construction for Schottky, ferrite bobbin core for Renco and Coilcraft, and powdered iron toroid for Pulse Engineering.

Exceeding the maximum current rating of the inductor can cause the inductor to overheat because of the copper wire losses, or the core can saturate. If the inductor begins to saturate, the inductance decreases rapidly and the inductor begins to look mainly resistive (the DC resistance of the winding). This can cause the switch current to rise very rapidly and force the switch into a cycle-by-cycle current limit, thus reducing the DC output load current. This can also result in overheating of the inductor or the LM2596. Different inductor types have different saturation characteristics, so consider this when selecting an inductor.

The inductor manufacturer's data sheets include current and energy limits to avoid inductor saturation.

For continuous mode operation, see the inductor selection graphs in Figure 9-5 through Figure 9-8.

Copyright © 2023 Texas Instruments Incorporated

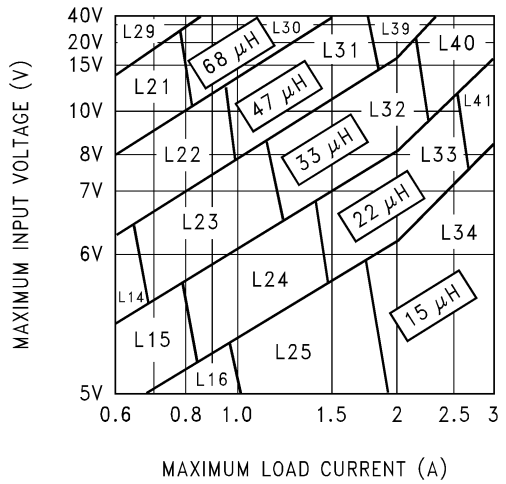

Figure 9-5. LM2596-3.3

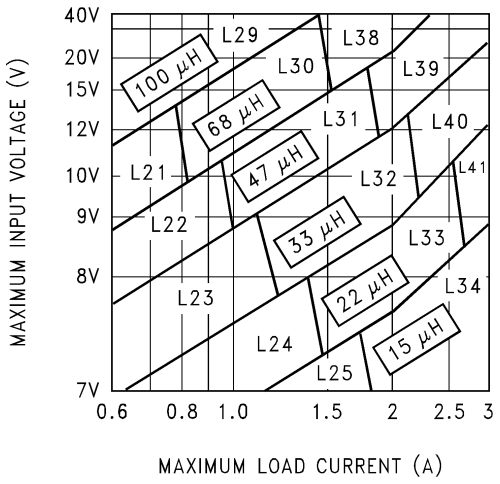

Figure 9-6. LM2596-5.0

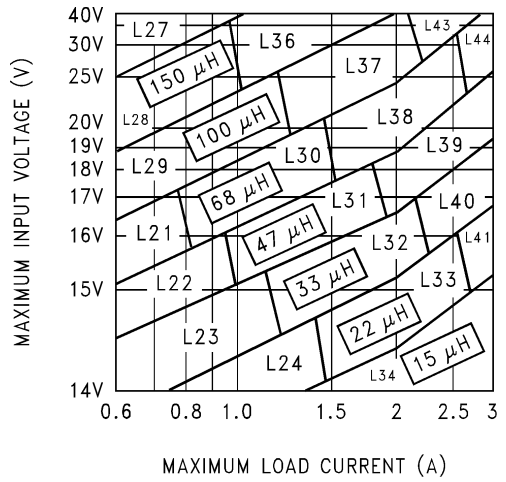

Figure 9-7. LM2596-12

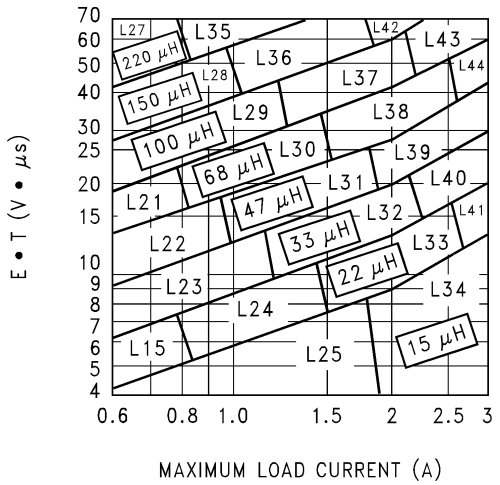

Figure 9-8. LM2596-ADJ

Table 9-1. Inductor Manufacturers Part Numbers

	INDUCTANCE (µH)	CURRENT (A)	SCHOTT		RENCO		PULSE ENGINEERING		COILCRAFT
			THROUGH-HOLE	SURFACE-MOUNT	THROUGH-HOLE	SURFACE-MOUNT	THROUGH-HOLE	SURFACE-MOUNT	SURFACE-MOUNT
L15	22	0.99	67148350	67148460	RL-1284-22-43	RL1500-22	PE-53815	PE-53815-S	DO3308-223
L21	68	0.99	67144070	67144450	RL-5471-5	RL1500-68	PE-53821	PE-53821-S	DO3316-683
L22	47	1.17	67144080	67144460	RL-5471-6	—	PE-53822	PE-53822-S	DO3316-473
L23	33	1.40	67144090	67144470	RL-5471-7	—	PE-53823	PE-53823-S	DO3316-333
L24	22	1.70	67148370	67148480	RL-1283-22-43	—	PE-53824	PE-53825-S	DO3316-223
L25	15	2.10	67148380	67148490	RL-1283-15-43	—	PE-53825	PE-53824-S	DO3316-153
L26	330	0.80	67144100	67144480	RL-5471-1	—	PE-53826	PE-53826-S	DO5022P-334
L27	220	1.00	67144110	67144490	RL-5471-2	—	PE-53827	PE-53827-S	DO5022P-224
L28	150	1.20	67144120	67144500	RL-5471-3	—	PE-53828	PE-53828-S	DO5022P-154
L29	100	1.47	67144130	67144510	RL-5471-4	—	PE-53829	PE-53829-S	DO5022P-104
L30	68	1.78	67144140	67144520	RL-5471-5	—	PE-53830	PE-53830-S	DO5022P-683
L31	47	2.20	67144150	67144530	RL-5471-6	—	PE-53831	PE-53831-S	DO5022P-473
L32	33	2.50	67144160	67144540	RL-5471-7	—	PE-53932	PE-53932-S	DO5022P-333

Copyright © 2023 Texas Instruments Incorporated

Table 9-1. Inductor Manufacturers Part Numbers (continued)

	INDUCTANCE (µH)	CURRENT (A)	SCHOTT		RENCO		PULSE ENGINEERING		COILCRAFT
			THROUGH-HOLE	SURFACE-MOUNT	THROUGH-HOLE	SURFACE-MOUNT	THROUGH-HOLE	SURFACE-MOUNT	SURFACE-MOUNT
L33	22	3.10	67148390	67148500	RL-1283-22-43	—	PE-53933	PE-53933-S	DO5022P-223
L34	15	3.40	67148400	67148790	RL-1283-15-43	—	PE-53934	PE-53934-S	DO5022P-153
L35	220	1.70	67144170	—	RL-5473-1	—	PE-53935	PE-53935-S	—
L36	150	2.10	67144180	—	RL-5473-4	—	PE-54036	PE-54036-S	—
L37	100	2.50	67144190	—	RL-5472-1	—	PE-54037	PE-54037-S	—
L38	68	3.10	67144200	—	RL-5472-2	—	PE-54038	PE-54038-S	—
L39	47	3.50	67144210	—	RL-5472-3	—	PE-54039	PE-54039-S	—
L40	33	3.50	67144220	67148290	RL-5472-4	—	PE-54040	PE-54040-S	—
L41	22	3.50	67144230	67148300	RL-5472-5	—	PE-54041	PE-54041-S	—
L42	150	2.70	67148410	—	RL-5473-4	—	PE-54042	PE-54042-S	—
L43	100	3.40	67144240	—	RL-5473-2	—	PE-54043		—
L44	68	3.40	67144250	—	RL-5473-3	—	PE-54044		—

9.1.6 Output Voltage Ripple and Transients

The output voltage of a switching power supply operating in the continuous mode will contain a sawtooth ripple voltage at the switcher frequency, and can also contain short voltage spikes at the peaks of the sawtooth waveform.

The output ripple voltage is a function of the inductor sawtooth ripple current and the ESR of the output capacitor. A typical output ripple voltage can range from approximately 0.5% to 3% of the output voltage. To obtain low ripple voltage, the ESR of the output capacitor must be low; however, exercise caution when using extremely low ESR capacitors because they can affect the loop stability, resulting in oscillation problems. TI recommends a post ripple filter if very low output ripple voltage is required (less than 20 mV) (see Figure 9-10). The inductance required is typically between 1 µH and 5 µH, with low DC resistance, to maintain good load regulation. A low ESR output filter capacitor is also required to assure good dynamic load response and ripple reduction. The ESR of this capacitor can be as low as desired, because it is out of the regulator feedback loop. Figure 8-9 shows a typical output ripple voltage, with and without a post ripple filter.

When observing output ripple with a scope, it is essential that a short, low inductance scope probe ground connection be used. Most scope probe manufacturers provide a special probe terminator which is soldered onto the regulator board, preferably at the output capacitor. This provides a very short scope ground, thus eliminating the problems associated with the 3-inch ground lead normally provided with the probe, and provides a much cleaner and more accurate picture of the ripple voltage waveform.

The voltage spikes are caused by the fast switching action of the output switch and the diode, the parasitic inductance of the output filter capacitor, and its associated wiring. To minimize these voltage spikes, the output capacitor must be designed for switching regulator applications, and the lead lengths must be kept very short. Wiring inductance, stray capacitance, as well as the scope probe used to evaluate these transients, all contribute to the amplitude of these spikes.

When a switching regulator is operating in the continuous mode, the inductor current waveform ranges from a triangular to a sawtooth type of waveform (depending on the input voltage). For a given input and output voltage, the peak-to-peak amplitude of this inductor current waveform remains constant. As the load current increases or decreases, the entire sawtooth current waveform also rises and falls. The average value (or the center) of this current waveform is equal to the DC load current.

If the load current drops to a low enough level, the bottom of the sawtooth current waveform reaches zero, and the switcher smoothly changes from a continuous to a discontinuous mode of operation. Most switcher designs (regardless of how large the inductor value is) is forced to run discontinuous if the output is lightly loaded. This is a perfectly acceptable mode of operation.

Copyright © 2023 Texas Instruments Incorporated

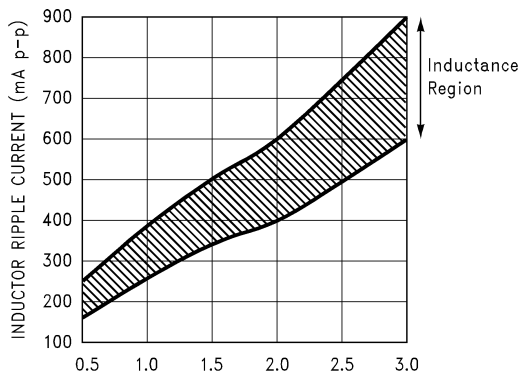

Figure 9-9. Peak-to-Peak Inductor Ripple Current versus Load Current

In a switching regulator design, knowing the value of the peak-to-peak inductor ripple current (ΔI_{IND}) can be useful for determining a number of other circuit parameters. Parameters such as peak inductor or peak switch current, minimum load current before the circuit becomes discontinuous, output ripple voltage, and output capacitor ESR can all be calculated from the peak-to-peak ΔI_{IND}. When the inductor nomographs in Figure 9-5 through *Figure 9-8* are used to select an inductor value, the peak-to-peak inductor ripple current can immediately be determined. Figure 9-9 shows the range of (ΔI_{IND}) that can be expected for different load currents. Figure 9-9 also shows how the peak-to-peak inductor ripple current (ΔI_{IND}) changes as you go from the lower border to the upper border (for a given load current) within an inductance region. The upper border represents a higher input voltage, while the lower border represents a lower input voltage.

These curves are only correct for continuous mode operation, and only if the inductor selection guides are used to select the inductor value.

Consider the following example:

V_{OUT} = 5 V, maximum load current of 2.5 A

V_{IN} = 12 V, nominal, varying between 10 V and 16 V.

The selection guide in Figure 9-6 shows that the vertical line for a 2.5-A load current and the horizontal line for the 12-V input voltage intersect approximately midway between the upper and lower borders of the 33-µH inductance region. A 33-µH inductor allows a peak-to-peak inductor current (ΔI_{IND}), which is a percentage of the maximum load current, to flow. In Figure 9-9, follow the 2.5-A line approximately midway into the inductance region, and read the peak-to-peak inductor ripple current (ΔI_{IND}) on the left hand axis (approximately 620 mAp-p).

As the input voltage increases to 16 V, approaching the upper border of the inductance region, the inductor ripple current increases. Figure 9-9 shows that for a load current of 2.5 A, the peak-to-peak inductor ripple current (ΔI_{IND}) is 620 mA with 12 V_{IN}, and can range from 740 mA at the upper border (16 V_{IN}) to 500 mA at the lower border (10 V_{IN}).

After the ΔI_{IND} value is known, use these equations to calculate additional information about the switching regulator circuit.

$$\text{Peak Inductor or peak switch current} = \left(I_{LOAD} + \frac{\Delta I_{IND}}{2}\right) = \left(2.5\text{ A} + \frac{0.62\text{ A}}{2}\right) = 2.81\text{ A} \quad (1)$$

$$\text{Minimum load current before the circuit becomes discontinuous} = \frac{\Delta I_{IND}}{2} = \frac{0.62\text{ A}}{2} = 0.31\text{ A} \quad (2)$$

$$\text{Output Ripple Voltage} = (\Delta I_{IND})(\text{ESR of } C_{OUT}) = (0.62\text{ A})(0.1\ \Omega) = 62\text{ mV}_{pp} \quad (3)$$

$$\text{ESR of } C_{OUT} = \left(\frac{\text{Output Ripple Voltage}}{\Delta I_{IND}}\right) = \frac{0.062\text{ V}}{0.62\text{ A}} = 0.1\ \Omega \quad (4)$$

Copyright © 2023 Texas Instruments Incorporated

9.1.7 Open-Core Inductors

Another possible source of increased output ripple voltage or unstable operation is from an open-core inductor. Ferrite bobbin or stick inductors have magnetic lines of flux flowing through the air from one end of the bobbin to the other end. These magnetic lines of flux will induce a voltage into any wire or PCB copper trace that comes within the inductor magnetic field. The strength of the magnetic field, the orientation and location of the PC copper trace to the magnetic field, and the distance between the copper trace and the inductor determine the amount of voltage generated in the copper trace. Another way of looking at this inductive coupling is to consider the PCB copper trace as one turn of a transformer (secondary) with the inductor winding as the primary. Many millivolts can be generated in a copper trace located near an open-core inductor, which can cause stability problems or high output ripple voltage problems.

If unstable operation is seen, and an open-core inductor is used, it is possible that the location of the inductor with respect to other PC traces can be the problem. To determine if this is the problem, temporarily raise the inductor away from the board by several inches and then check circuit operation. If the circuit now operates correctly, then the magnetic flux from the open core inductor is causing the problem. Substituting a closed core inductor such as a torroid or E-core will correct the problem, or re-arranging the PC layout can be necessary. Magnetic flux cutting the IC device ground trace, feedback trace, or the positive or negative traces of the output capacitor must be minimized.

Sometimes, placing a trace directly beneath a bobbin inductor will provide good results, provided it is exactly in the center of the inductor (because the induced voltages cancel themselves out). However, problems can arise if the trace is off center one direction or the other. If flux problems are present, even the direction of the inductor winding can make a difference in some circuits.

This discussion on open core inductors is not to frighten users, but to alert users on what kind of problems to watch out for. Open-core bobbin or *stick* inductors are an inexpensive, simple way of making a compact, efficient inductor, and they are used by the millions in many different applications.

9.2 Typical Applications

9.2.1 LM2596 Fixed Output Series Buck Regulator

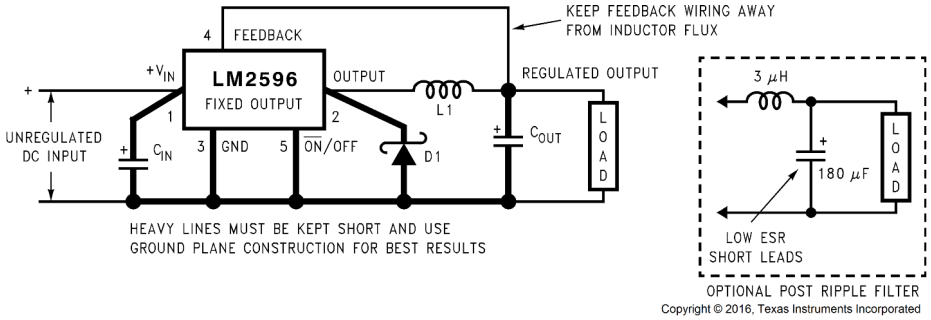

C_{IN} — 470-µF, 50-V, Aluminum Electrolytic Nichicon *PL Series* C_{OUT} — 220-µF, 25-V Aluminum Electrolytic, Nichicon *PL Series* D1 — 5-A, 40-V Schottky Rectifier, 1N5825 L1 — 68 µH, L38

Figure 9-10. Fixed Output Voltage Version

9.2.1.1 Design Requirements

Table 9-2 lists the design parameters for this example.

Table 9-2. Design Parameters

PARAMETER	EXAMPLE VALUE
Regulated Output Voltage (3.3 V, 5 V or 12 V), V_{OUT}	5 V
Maximum DC Input Voltage, V_{IN}(max)	12 V
Maximum Load Current, I_{LOAD}(max)	3 A

9.2.1.2 Detailed Design Procedure

9.2.1.2.1 Custom Design with WEBENCH® Tools

Click here to create a custom design using the LM2596 device with the WEBENCH Power Designer.

1. Start by entering your V_{IN}, V_{OUT} and I_{OUT} requirements.
2. Optimize your design for key parameters like efficiency, footprint and cost using the optimizer dial and compare this design with other possible solutions from Texas Instruments.
3. WEBENCH Power Designer provides you with a customized schematic along with a list of materials with real time pricing and component availability.
4. In most cases, you will also be able to:
   - Run electrical simulations to see important waveforms and circuit performance,
   - Run thermal simulations to understand the thermal performance of your board,
   - Export your customized schematic and layout into popular CAD formats,
   - Print PDF reports for the design, and share your design with colleagues.
5. Get more information about WEBENCH tools at www.ti.com/webench.

9.2.1.2.2 Inductor Selection (L1)

1. Select the correct inductor value selection guide from Figure 9-5, Figure 9-6, or Figure 9-7 (output voltages of 3.3 V, 5 V, or 12 V respectively). Use the inductor selection guide for the 5-V version shown in Figure 9-6.
2. From the inductor value selection guide, identify the inductance region intersected by the maximum input voltage line and the maximum load current line. Each region is identified by an inductance value and an inductor code (LXX). From the inductor value selection guide shown in Figure 9-6, the inductance region intersected by the 12-V horizontal line and the 3-A vertical line is 33 µH, and the inductor code is L40.
3. Select an appropriate inductor from the four manufacturer's part numbers listed in Table 9-1. The inductance value required is 33 µH. See row L40 of Table 9-1 and choose an inductor part number from any of the manufacturers shown. In most instances, both through-hole and surface-mount inductors are available.

9.2.1.2.3 Output Capacitor Selection (C_{OUT})

1. In the majority of applications, low ESR (Equivalent Series Resistance) electrolytic capacitors between 82 µF and 820 µF and low ESR solid tantalum capacitors between 10 µF and 470 µF provide the best results. This capacitor must be placed close to the IC using short capacitor leads and short copper traces. Do not use capacitors larger than 820 µF .

   Note

   For additional information, see section on output capacitors in Table 9-3.

2. To simplify the capacitor selection procedure, see Table 9-3 for quick design component selection. This table contains different input voltages, output voltages, and load currents, and lists various inductors and output capacitors that will provide the best design solutions.

   From Table 9-3, locate the 5-V output voltage section. In the load current column, choose the load current line that is closest to the current required for the application; for this example, use the 3-A line. In the maximum input voltage column, select the line that covers the input voltage required for the application; in this example, use the 15-V line. The rest of the line shows recommended inductors and capacitors that will provide the best overall performance.

Copyright © 2023 Texas Instruments Incorporated

Table 9-3. LM2596 Fixed Voltage Quick Design Component Selection Table

CONDITIONS			INDUCTOR		OUTPUT CAPACITOR			
					THROUGH-HOLE ELECTROLYTIC		SURFACE-MOUNT TANTALUM	
OUTPUT VOLTAGE (V)	LOAD CURRENT (A)	MAX INPUT VOLTAGE (V)	INDUCTANCE (µH)	INDUCTOR (#)	PANASONIC HFQ SERIES (µF/V)	NICHICON PL SERIES (µF/V)	AVX TPS SERIES (µF/V)	SPRAGUE 595D SERIES (µF/V)
3.3	3	5	22	L41	470/25	560/16	330/6.3	390/6.3
		7	22	L41	560/35	560/35	330/6.3	390/6.3
		10	22	L41	680/35	680/35	330/6.3	390/6.3
		40	33	L40	560/35	470/35	330/6.3	390/6.3
		6	22	L33	470/25	470/35	330/6.3	390/6.3
	2	10	33	L32	330/35	330/35	330/6.3	390/6.3
		40	47	L39	330/35	270/50	220/10	330/10
5	3	8	22	L41	470/25	560/16	220/10	330/10
		10	22	L41	560/25	560/25	220/10	330/10
		15	33	L40	330/35	330/35	220/10	330/10
		40	47	L39	330/35	270/35	220/10	330/10
		9	22	L33	470/25	560/16	220/10	330/10
	2	20	68	L38	180/35	180/35	100/10	270/10
		40	68	L38	180/35	180/35	100/10	270/10
12	3	15	22	L41	470/25	470/25	100/16	180/16
		18	33	L40	330/25	330/25	100/16	180/16
		30	68	L44	180/25	180/25	100/16	120/20
		40	68	L44	180/35	180/35	100/16	120/20
		15	33	L32	330/25	330/25	100/16	180/16
	2	20	68	L38	180/25	180/25	100/16	120/20
		40	150	L42	82/25	82/25	68/20	68/25

The capacitor list contains both through-hole electrolytic and surface-mount tantalum capacitors from four different capacitor manufacturers. TI recommends that both the manufacturers and the manufacturer's series that are listed in Table 9-3.

In this example aluminum electrolytic capacitors from several different manufacturers are available with the range of ESR numbers required.

- 330-µF, 35-V Panasonic HFQ Series
- 330-µF, 35-V Nichicon PL Series

3. The capacitor voltage rating for electrolytic capacitors must be at least 1.5 times greater than the output voltage, and often require much higher voltage ratings to satisfy the low ESR requirements for low output ripple voltage.

   For a 5-V output, a capacitor voltage rating of at least 7.5 V is required. But even a low ESR, switching grade, 220-µF, 10-V aluminum electrolytic capacitor can exhibit approximately 225 mΩ of ESR (see Figure 9-2 for the ESR versus voltage rating). This amount of ESR can result in relatively high output ripple voltage. To reduce the ripple to 1% or less of the output voltage, a capacitor with a higher value or with a higher voltage rating (lower ESR) must be selected. A 16-V or 25-V capacitor will reduce the ripple voltage by approximately half.

9.2.1.2.4 Catch Diode Selection (D1)

1. The catch diode current rating must be at least 1.3 times greater than the maximum load current. Also, if the power supply design must withstand a continuous output short, the diode must have a current rating equal to the maximum current limit of the LM2596. The most stressful condition for this diode is an overload or shorted output condition. See Table 9-4. In this example, a 5-A, 20-V, 1N5823 Schottky diode will provide the best performance, and will not be overstressed even for a shorted output.

Table 9-4. Diode Selection Table

VR	3-A DIODES				4-A TO 6-A DIODES			
	SURFACE-MOUNT		THROUGH-HOLE		SURFACE-MOUNT		THROUGH-HOLE	
	SCHOTTKY	ULTRA FAST RECOVERY	SCHOTTKY	ULTRA FAST RECOVERY	SCHOTTKY	ULTRA FAST RECOVERY	SCHOTTKY	ULTRA FAST RECOVERY
20 V		All of these diodes are rated to at least 50V.	1N5820	All of these diodes are rated to at least 50V.		All of these diodes are rated to at least 50V.	SR502	All of these diodes are rated to at least 50V.
	SK32		SR302				1N5823	
			MBR320				SB520	
30 V	30WQ03		1N5821					
	SK33		MBR330		50WQ03		SR503	
			31DQ03				1N5824	
			1N5822				SB530	
40 V	SK34		SR304		50WQ04		SR504	
	MBRS340		MBR340				1N5825	
	30WQ04	MURS320	31DQ04	MUR320		MURS620	SB540	MUR620
50 V	SK35	30WF10	SR305			50WF10		HER601
or	MBRS360		MBR350		50WQ05		SB550	
More	30WQ05		31DQ05				50SQ080	

2. The reverse voltage rating of the diode must be at least 1.25 times the maximum input voltage.
3. This diode must be fast (short reverse recovery time) and must be placed close to the LM2596 using short leads and short-printed circuit traces. Because of their fast switching speed and low forward voltage drop, Schottky diodes provide the best performance and efficiency, and must be the first choice, especially in low output voltage applications. Ultra-fast recovery, or high-efficiency rectifiers also provide good results. Ultra-fast recovery diodes typically have reverse recovery times of 50 ns or less. Rectifiers such as the 1N5400 series must not be used because they are too slow.

9.2.1.2.5 Input Capacitor (C_{IN})

A low ESR aluminum or tantalum bypass capacitor is required between the input pin and ground pin to prevent large voltage transients from appearing at the input. This capacitor must be placed close to the IC using short leads. In addition, the RMS current rating of the input capacitor must be selected to be at least ½ the DC load current. The capacitor manufacturers data sheet must be checked to assure that this current rating is not exceeded. Figure 9-1 shows typical RMS current ratings for several different aluminum electrolytic capacitor values.

For an aluminum electrolytic, the capacitor voltage rating must be approximately 1.5 times the maximum input voltage. Exercise caution if solid tantalum capacitors are used (see *Section 9.1.1*). The tantalum capacitor voltage rating must be 2 times the maximum input voltage and TI recommends that they be surge current tested by the manufacturer.

Use caution when using ceramic capacitors for input bypassing, because it can cause severe ringing at the V_{IN} pin.

Copyright © 2023 Texas Instruments Incorporated

The important parameters for the Input capacitor are the input voltage rating and the RMS current rating. With a nominal input voltage of 12 V, an aluminum electrolytic capacitor with a voltage rating greater than 18 V (1.5 × V_{IN}) is necessary. The next higher capacitor voltage rating is 25 V.

The RMS current rating requirement for the input capacitor in a buck regulator is approximately ½ the DC load current. In this example, with a 3-A load, a capacitor with a RMS current rating of at least 1.5 A is required. Figure 9-1 can be used to select an appropriate input capacitor. From the curves, locate the 35-V line and note which capacitor values have RMS current ratings greater than 1.5 A. A 680-µF, 35-V capacitor can be used.

For a through-hole design, a 680-µF, 35-V electrolytic capacitor (Panasonic HFQ series or Nichicon PL series or equivalent) can be adequate. Other types or other manufacturers' capacitors can be used provided the RMS ripple current ratings are adequate.

For surface-mount designs, solid tantalum capacitors can be used, but exercise caution with regard to the capacitor surge current rating (see *Section 9.1.1* in this data sheet). The TPS series available from AVX, and the 593D series from Sprague are both surge current tested.

9.2.1.3 Application Curves

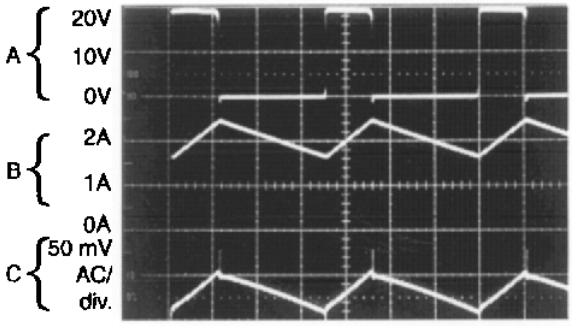

Continuous Mode Switching Waveforms V_{IN} = 20 V, V_{OUT} = 5 V, I_{LOAD} = 2 A, L = 32 µH, C_{OUT} = 220 µF, C_{OUT} ESR = 50 mΩ A: Output Pin Voltage, 10 V/div. B: Inductor Current 1 A/div. C: Output Ripple Voltage, 50 mV/div.

Figure 9-11. Horizontal Time Base: 2 µs/div

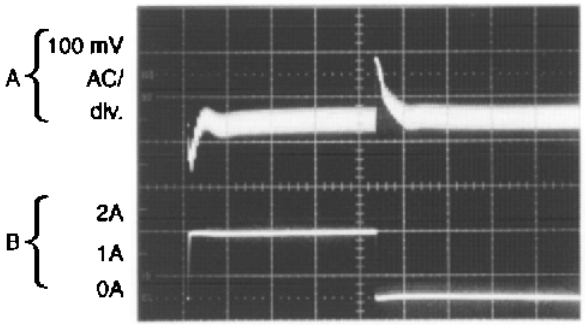

Load Transient Response for Continuous Mode V_{IN} = 20 V, V_{OUT} = 5 V, I_{LOAD} = 500 mA to 2 A, L = 32 µH, C_{OUT} = 220 µF, C_{OUT} ESR = 50 mΩ A: Output Voltage, 100 mV/div. (AC) B: 500-mA to 2-A Load Pulse

Figure 9-12. Horizontal Time Base: 100 µs/div

9.2.2 LM2596 Adjustable Output Series Buck Regulator

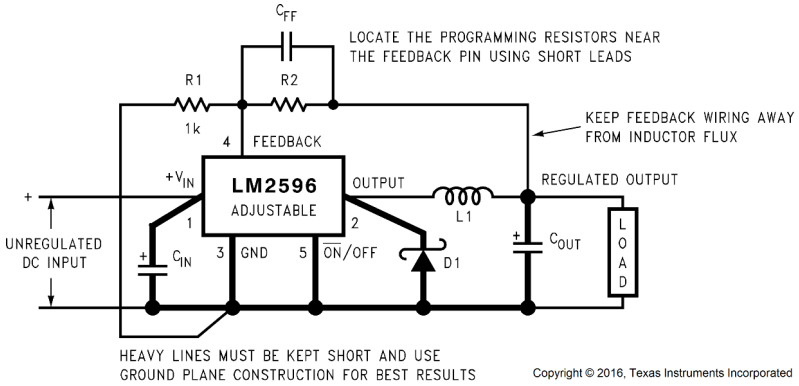

$V_{OUT} = V_{REF}\left(1 + \frac{R_2}{R_1}\right)$ where V_{REF} = 1.23 V $R_2 = R_1\left(\frac{V_{OUT}}{V_{REF}} - 1\right)$ Select R_1 to be approximately 1 kΩ, use a 1% resistor for best stability. C_{IN} — 470-µF, 50-V, Aluminum Electrolytic Nichicon *PL Series* C_{OUT} — 220-µF, 35-V Aluminum Electrolytic, Nichicon *PL Series* D1 — 5-A, 40-V Schottky Rectifier, 1N5825 L1 — 68 µH, L38 R1 — 1 kΩ, 1% C_{FF} — See *Section 9.1.2*

Figure 9-13. Adjustable Output Voltage Version

9.2.2.1 Design Requirements

Table 9-5 lists the design parameters for this example.

Table 9-5. Design Parameters

PARAMETER	EXAMPLE VALUE
Regulated output voltage (3.3V, 5V or 12V), V_{OUT}	20 V
Maximum DC input voltage, V_{IN}(max)	28 V
Maximum load current, I_{LOAD}(max)	3 A
Switching frequency, F	Fixed at a nominal 150 kHz

9.2.2.2 Detailed Design Procedure

9.2.2.2.1 Programming Output Voltage

Select R_1 and R_2, as shown in Table 9-6

Use Equation 5 to select the appropriate resistor values.

$$V_{OUT} = V_{REF}\left(1 + \frac{R_2}{R_1}\right) \text{ where } V_{REF} = 1.23\text{ V} \tag{5}$$

Select a value for R_1 between 240 Ω and 1.5 kΩ. The lower resistor values minimize noise pickup in the sensitive feedback pin. (For the lowest temperature coefficient and the best stability with time, use 1% metal film resistors.). Calculate R_2 with Equation 6.

$$R_2 = R_1\left(\frac{V_{OUT}}{V_{REF}} - 1\right) \tag{6}$$

Select R_1 to be 1 kΩ, 1%. Solve for R_2 in Equation 7.

$$R_2 = R_1\left(\frac{V_{OUT}}{V_{REF}} - 1\right) = 1\text{ k}\Omega\left(\frac{20\text{ V}}{1.23\text{ V}} - 1\right) \tag{7}$$

R_2 = 1 k (16.26 − 1) = 15.26 k, closest 1% value is 15.4 kΩ.

R_2 = 15.4 kΩ.

9.2.2.2.2 Inductor Selection (L1)

1. Calculate the inductor Volt • microsecond constant E × T (V × µs), with :

$$E{*}T = (V_{IN} - V_{OUT} - V_{SAT})\left(\frac{V_{OUT} + V_D}{V_{IN} - V_{SAT} + V_D}\right)\left(\frac{1000}{150\text{ kHz}}\right) \tag{8}$$

   where
   - V_{SAT} = internal switch saturation voltage = 1.16 V
   - V_D = diode forward voltage drop = 0.5 V

   Calculate the inductor Volt • microsecond constant

   (E × T),

$$E{*}T = (28\text{ V} - 20\text{ V} - 1.16\text{ V})\left(\frac{20\text{ V} + 0.5\text{ V}}{28\text{ V} - 1.16\text{ V} + 0.05\text{ V}}\right)\left(\frac{1000}{150\text{ kHz}}\right) = 34.2\ (\text{V*µs}) \tag{9}$$

2. Use the E × T value from the previous formula and match it with the E × T number on the vertical axis of the Inductor Value Selection Guide shown in Figure 9-8.

   E × T = 34.2 (V × µs)
3. On the horizontal axis, select the maximum load current.

   I_{LOAD}(max) = 3 A

Copyright © 2023 Texas Instruments Incorporated

4. Identify the inductance region intersected by the E × T value and the maximum load current value. Each region is identified by an inductance value and an inductor code (LXX). From the inductor value selection guide shown in Figure 9-8, the inductance region intersected by the 34 (V • µs) horizontal line and the 3-A vertical line is 47 µH, and the inductor code is L39.
5. Select an appropriate inductor from the manufacturers' part numbers listed in Table 9-1. From the table in *Table 9-1,* locate line L39, and select an inductor part number from the list of manufacturers part numbers.

9.2.2.2.3 Output Capacitor Selection (C_{OUT})

1. In the majority of applications, low ESR electrolytic or solid tantalum capacitors between 82 µF and 820 µF provide the best results. This capacitor must be placed close to the IC using short capacitor leads and short copper traces. Do not use capacitors larger than 820 µF.

Note

For additional information, see section on output capacitors in *Section 9.1.3* section.

2. To simplify the capacitor selection procedure, see Table 9-6 for a quick design guide. This table contains different output voltages, and lists various output capacitors that will provide the best design solutions.

   From Table 9-6, locate the output voltage column. From that column, locate the output voltage closest to the output voltage in your application. In this example, select the 24-V line. Under the Section 9.1.3 section, select a capacitor from the list of through-hole electrolytic or surface-mount tantalum types from four different capacitor manufacturers. TI recommends that both the manufacturers and the manufacturers' series that are listed in Table 9-6 be used.

   In this example, through hole aluminum electrolytic capacitors from several different manufacturers are available.
   - 220-µF, 35-V Panasonic HFQ Series
   - 150-µF, 35-V Nichicon PL Series
3. The capacitor voltage rating must be at least 1.5 times greater than the output voltage, and often much higher voltage ratings are required to satisfy the low ESR requirements required for low output ripple voltage.

   For a 20-V output, a capacitor rating of at least 30 V is required. In this example, either a 35-V or 50-V capacitor can work. A 35-V rating was chosen, although a 50-V rating can also be used if a lower output ripple voltage is required.

   Other manufacturers or other types of capacitors can also be used, provided the capacitor specifications (especially the 100-kHz ESR) closely match the types listed in Table 9-6. Refer to the capacitor manufacturers data sheet for this information.

9.2.2.2.4 Feedforward Capacitor (C_{FF})

See Table 9-6.

For output voltages greater than approximately 10 V, an additional capacitor is required. The compensation capacitor is typically between 100 pF and 33 nF, and is wired in parallel with the output voltage setting resistor, R_2. It provides additional stability for high output voltages, low input or output voltages, or very low ESR output capacitors, such as solid tantalum capacitors. Calculate the value for C_{FF} with Equation 10:

$$C_{FF} = \frac{1}{(31)\left(10^3\right)(R_2)} \tag{10}$$

This capacitor type can be ceramic, plastic, silver mica, and so forth. Because of the unstable characteristics of ceramic capacitors made with Z5U material, TI does not recommend them.

Table 9-6 contains feedforward capacitor values for various output voltages. In this example, a 560-pF capacitor is required.

Table 9-6. Output Capacitor and Feedforward Capacitor Selection Table

OUTPUT VOLTAGE (V)	THROUGH-HOLE OUTPUT CAPACITOR			SURFACE-MOUNT OUTPUT CAPACITOR		
	PANASONIC HFQ SERIES (µF/V)	NICHICON PL SERIES (µF/V)	FEEDFORWARD CAPACITOR	AVX TPS SERIES (µF/V)	SPRAGUE 595D SERIES (µF/V)	FEEDFORWARD CAPACITOR
2	820/35	820/35	33 nF	330/6.3	470/4	33 nF
4	560/35	470/35	10 nF	330/6.3	390/6.3	10 nF
6	470/25	470/25	3.3 nF	220/10	330/10	3.3 nF
9	330/25	330/25	1.5 nF	100/16	180/16	1.5 nF
1 2	330/25	330/25	1 nF	100/16	180/16	1 nF
1 5	220/35	220/35	680 pF	68/20	120/20	680 pF
2 4	220/35	150/35	560 pF	33/25	33/25	220 pF
2 8	100/50	100/50	390 pF	10/35	15/50	220 pF

9.2.2.2.5 Catch Diode Selection (D1)

1. The catch diode current rating must be at least 1.3 times greater than the maximum load current. Also, if the power supply design must withstand a continuous output short, the diode must have a current rating equal to the maximum current limit of the LM2596. The most stressful condition for this diode is an overload or shorted output condition. See Table 9-4. Schottky diodes provide the best performance, and in this example, a 5-A, 40-V, 1N5825 Schottky diode can be a good choice. The 5-A diode rating is more than adequate and will not be overstressed even for a shorted output.
2. The reverse voltage rating of the diode must be at least 1.25 times the maximum input voltage.
3. This diode must be fast (short reverse recovery time) and must be placed close to the LM2596 using short leads and short-printed circuit traces. Because of their fast switching speed and low forward voltage drop, Schottky diodes provide the best performance and efficiency, and must be the first choice, especially in low output voltage applications. Ultra-fast recovery or high-efficiency rectifiers are also good choices, but some types with an abrupt turnoff characteristic can cause instability or EMI problems. Ultra-fast recovery diodes typically have reverse recovery times of 50 ns or less. Rectifiers such as the 1N4001 series must not be used because they are too slow.

9.2.2.2.6 Input Capacitor (C_{IN})

A low ESR aluminum or tantalum bypass capacitor is required between the input pin and ground to prevent large voltage transients from appearing at the input. In addition, the RMS current rating of the input capacitor must be selected to be at least ½ the DC load current. The capacitor manufacturers data sheet must be checked to assure that this current rating is not exceeded. Figure 9-1 shows typical RMS current ratings for several different aluminum electrolytic capacitor values.

This capacitor must be placed close to the IC using short leads and the voltage rating must be approximately 1.5 times the maximum input voltage.

If solid tantalum input capacitors are used, TI recommends that they be surge current tested by the manufacturer.

Use caution when using a high dielectric constant ceramic capacitor for input bypassing, because it can cause severe ringing at the V_{IN} pin.

The important parameters for the input capacitor are the input voltage rating and the RMS current rating. With a nominal input voltage of 28 V, an aluminum electrolytic aluminum electrolytic capacitor with a voltage rating greater than 42 V (1.5 × V_{IN}) is required. Because the the next higher capacitor voltage rating is 50 V, a 50-V capacitor must be used. The capacitor voltage rating of (1.5 × V_{IN}) is a conservative guideline, and can be modified somewhat if desired.

The RMS current rating requirement for the input capacitor of a buck regulator is approximately ½ the DC load current. In this example, with a 3-A load, a capacitor with a RMS current rating of at least 1.5 A is required.

Copyright © 2023 Texas Instruments Incorporated

Figure 9-1 can be used to select an appropriate input capacitor. From the curves, locate the 50-V line and note which capacitor values have RMS current ratings greater than 1.5 A. Either a 470 µF or 680 µF, 50-V capacitor can be used.

For a through hole design, a 680-µF, 50-V electrolytic capacitor (Panasonic HFQ series or Nichicon PL series or equivalent) can be adequate. Other types or other manufacturers' capacitors can be used provided the RMS ripple current ratings are adequate.

For surface mount designs, solid tantalum capacitors can be used, but exercise caution with regard to the capacitor surge current rating (see *Section 9.1.1* in this data sheet). The TPS series available from AVX, and the 593D series from Sprague are both surge current tested.

9.2.2.3 Application Curves

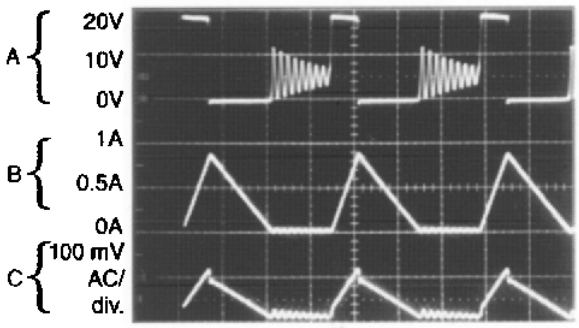

Discontinuous Mode Switching Waveforms V_{IN} = 20 V, V_{OUT} = 5 V, I_{LOAD} = 500 mA L = 10 µH, C_{OUT} = 330 µF, C_{OUT} ESR = 45 mΩ

A: Output Pin Voltage, 10 V/div.

B: Inductor Current 0.5 A/div.

C: Output Ripple Voltage, 100 mV/div.

Figure 9-14. Horizontal Time Base: 2 µs/div

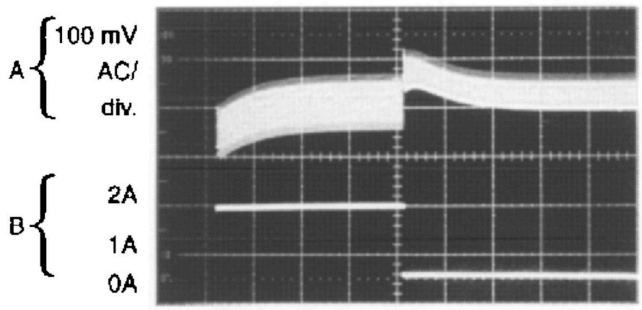

Load Transient Response for Discontinuous Mode V_{IN} = 20 V, V_{OUT} = 5V, I_{LOAD} = 500 mA to 2 A, L = 10 µH, C_{OUT} = 330 µF, C_{OUT} ESR = 45 mΩ

A: Output Voltage, 100 mV/div. (AC)

B: 500-mA to 2-A Load Pulse

Figure 9-15. Horizontal Time Base: 200 µs/div

9.3 Power Supply Recommendations

The LM2596 is designed to operate from an input voltage supply up to 40 V. This input supply must be well regulated and able to withstand maximum input current and maintain a stable voltage.

9.4 Layout

9.4.1 Layout Guidelines

As in any switching regulator, layout is very important. Rapidly switching currents associated with wiring inductance can generate voltage transients which can cause problems. For minimal inductance and ground loops, the wires indicated by heavy lines must be wide printed-circuit traces and must be kept as short as possible. For best results, external components must be placed as close to the switcher IC as possible using ground plane construction or single point grounding.

If open core inductors are used, take special care selecting the location and positioning of this type of inductor. Allowing the inductor flux to intersect sensitive feedback, IC groundpath and C_{OUT} wiring can cause problems.

When using the adjustable version, take special care selecting the location of the feedback resistors and the associated wiring. Physically place both resistors near the IC, and route the wiring away from the inductor, especially an open-core type of inductor (see *Section 9.1.7* for more information).

9.4.2 Layout Examples

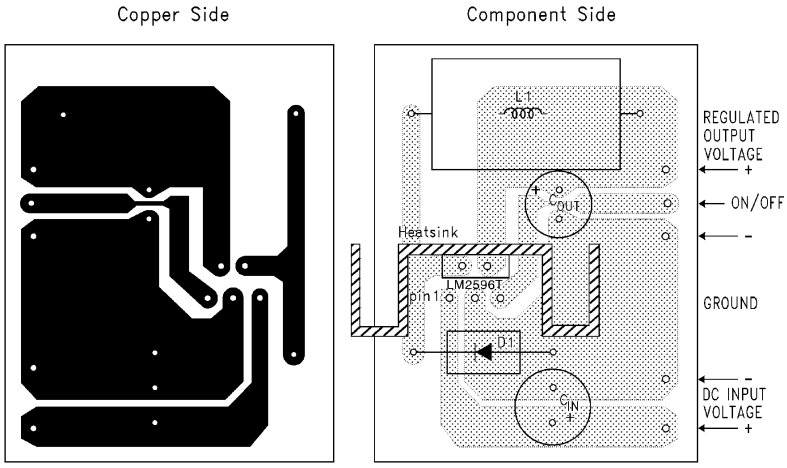

C_{IN} — 470-µF, 50-V, Aluminum Electrolytic Panasonic, *HFQ Series* C_{OUT} — 330-µF, 35-V, Aluminum Electrolytic Panasonic, *HFQ Series* D1 — 5-A, 40-V Schottky Rectifier, 1N5825 L1 — 47-µH, L39, Renco, Through Hole Thermalloy Heat Sink #7020

Figure 9-16. Typical Through-Hole PCB Layout, Fixed Output (1x Size), Double-Sided

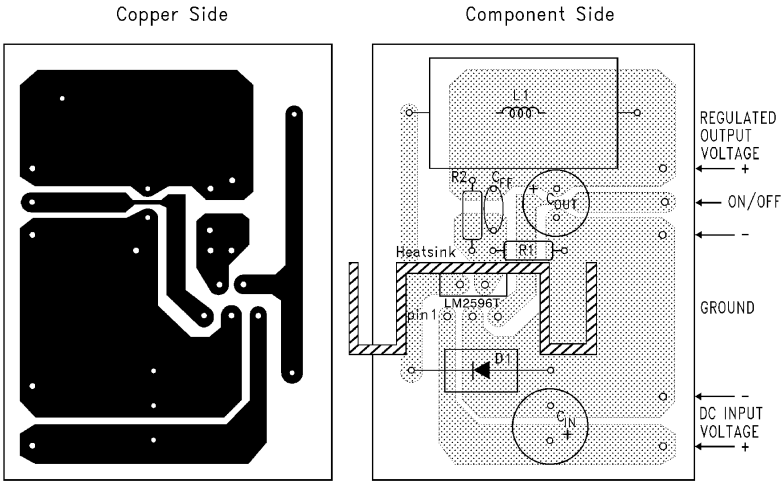

C_{IN}— 470-µF, 50-V, Aluminum Electrolytic Panasonic, *HFQ Series* C_{OUT}—220-µF, 35-V Aluminum Electrolytic Panasonic, *HFQ Series* D1—5-A, 40-V Schottky Rectifier, 1N5825 L1—47-µH, L39, Renco, Through Hole R_1—1 kΩ, 1% R_2—Use formula in Design Procedure C_{FF}—See Table 9-6. Thermalloy Heat Sink #7020

Figure 9-17. Typical Through-Hole PCB Layout, Adjustable Output (1x Size), Double-Sided

Copyright © 2023 Texas Instruments Incorporated

9.4.3 Thermal Considerations

The LM2596 is available in two packages: a 5-pin TO-220 (T) and a 5-pin surface mount TO-263 (S).

The TO-220 package requires a heat sink under most conditions. The size of the heat sink depends on the input voltage, the output voltage, the load current and the ambient temperature. Figure 9-18 shows the LM2596T junction temperature rises above ambient temperature for a 3-A load and different input and output voltages. The data for these curves was taken with the LM2596T (TO-220 package) operating as a buck switching regulator in an ambient temperature of 25°C (still air). These temperature rise numbers are all approximate and there are many factors that can affect these temperatures. Higher ambient temperatures require more heat sinking.

The TO-263 surface mount package tab is designed to be soldered to the copper on a printed-circuit board (PCB). The copper and the board are the heat sink for this package and the other heat producing components, such as the catch diode and inductor. The PCB copper area that the package is soldered to must be at least 0.4 in^2, and ideally must have two or more square inches of 2-oz. (0.0028 in.) copper. Additional copper area improves the thermal characteristics, but with copper areas greater than approximately 6 in^2, only small improvements in heat dissipation are realized. If further thermal improvements are required, TI recommends double-sided, multilayer PCB with large copper areas and airflow.

Figure 9-19 shows the LM2596S (TO-263 package) junction temperature rise above ambient temperature with a 2-A load for various input and output voltages. This data was taken with the circuit operating as a buck switching regulator with all components mounted on a PCB to simulate the junction temperature under actual operating conditions. This curve can be used for a quick check for the approximate junction temperature for various conditions, but be aware that there are many factors that can affect the junction temperature. When load currents higher than 2 A are used, double-sided or multilayer PCB with large copper areas or airflow can be required, especially for high ambient temperatures and high output voltages.

For the best thermal performance, wide copper traces and generous amounts of PCB copper must be used in the board layout. (One exception to this is the output (switch) pin, which must **not** have large areas of copper.) Large areas of copper provide the best transfer of heat (lower thermal resistance) to the surrounding air, and moving air lowers the thermal resistance even further.

Package thermal resistance and junction temperature rise numbers are all approximate, and there are many factors that will affect these numbers. Some of these factors include board size, shape, thickness, position, location, and even board temperature. Other factors are trace width, total printed-circuit copper area, copper thickness, single- or double-sided multilayer board, and the amount of solder on the board. The effectiveness of the PCB to dissipate heat also depends on the size, quantity, and spacing of other components on the board, as well as whether the surrounding air is still or moving. Furthermore, some of these components such as the catch diode will add heat to the PCB and the heat can vary as the input voltage changes. For the inductor, depending on the physical size, type of core material, and the DC resistance, it can either act as a heat sink taking heat away from the board, or it can add heat to the board.

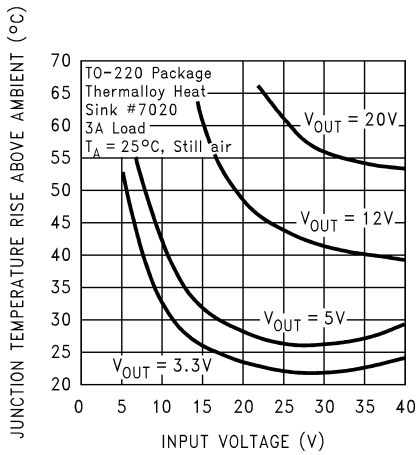

CIRCUIT DATA FOR TEMPERATURE RISE CURVE TO-220 PACKAGE (T)

Capacitors	Through-hole electrolytic
Inductor	Through-hole, Renco
Diode	Through-hole, 5-A 40-V, Schottky
PCB	3-square inch, single-sided, 2-oz. copper (0.0028″)

Figure 9-18. Junction Temperature Rise, TO-220

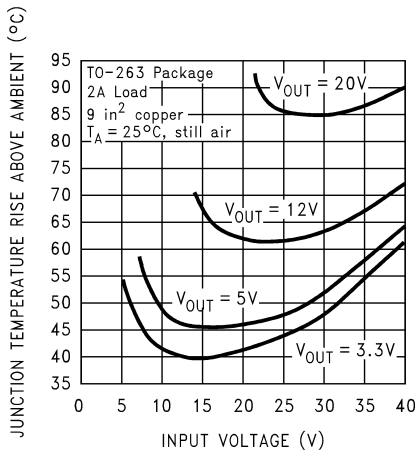

CIRCUIT DATA FOR TEMPERATURE RISE CURVE TO-263 PACKAGE (S)	
Capacitors	Surface-mount tantalum, molded *D* size
Inductor	Surface-mount, Pulse Engineering, 68 µH
Diode	Surface-mount, 5-A 40-V, Schottky
PCB	9-square inch, single-sided, 2-oz. copper (0.0028″)

Figure 9-19. Junction Temperature Rise, TO-263

Copyright © 2023 Texas Instruments Incorporated

10 Device and Documentation Support

10.1 Device Support

10.1.1 Third-Party Products Disclaimer

TI'S PUBLICATION OF INFORMATION REGARDING THIRD-PARTY PRODUCTS OR SERVICES DOES NOT CONSTITUTE AN ENDORSEMENT REGARDING THE SUITABILITY OF SUCH PRODUCTS OR SERVICES OR A WARRANTY, REPRESENTATION OR ENDORSEMENT OF SUCH PRODUCTS OR SERVICES, EITHER ALONE OR IN COMBINATION WITH ANY TI PRODUCT OR SERVICE.

10.1.2 Development Support

10.1.2.1 Custom Design with WEBENCH® Tools

Click here to create a custom design using the LM2596 device with the WEBENCH Power Designer.

1. Start by entering your V_{IN}, V_{OUT} and I_{OUT} requirements.
2. Optimize your design for key parameters like efficiency, footprint and cost using the optimizer dial and compare this design with other possible solutions from Texas Instruments.
3. WEBENCH Power Designer provides you with a customized schematic along with a list of materials with real time pricing and component availability.
4. In most cases, you will also be able to:
   - Run electrical simulations to see important waveforms and circuit performance,
   - Run thermal simulations to understand the thermal performance of your board,
   - Export your customized schematic and layout into popular CAD formats,
   - Print PDF reports for the design, and share your design with colleagues.
5. Get more information about WEBENCH tools at www.ti.com/webench.

10.2 Receiving Notification of Documentation Updates

To receive notification of documentation updates, navigate to the device product folder on ti.com. Click on *Subscribe to updates* to register and receive a weekly digest of any product information that has changed. For change details, review the revision history included in any revised document.

10.3 Support Resources

TI E2E™ support forums are an engineer's go-to source for fast, verified answers and design help — straight from the experts. Search existing answers or ask your own question to get the quick design help you need.

Linked content is provided "AS IS" by the respective contributors. They do not constitute TI specifications and do not necessarily reflect TI's views; see TI's Terms of Use.

10.4 Trademarks

TI E2E™ is a trademark of Texas Instruments.
WEBENCH® and SIMPLE SWITCHER® are registered trademarks of Texas Instruments.
All trademarks are the property of their respective owners.

10.5 Electrostatic Discharge Caution

This integrated circuit can be damaged by ESD. Texas Instruments recommends that all integrated circuits be handled with appropriate precautions. Failure to observe proper handling and installation procedures can cause damage.

ESD damage can range from subtle performance degradation to complete device failure. Precision integrated circuits may be more susceptible to damage because very small parametric changes could cause the device not to meet its published specifications.

10.6 Glossary

TI Glossary	This glossary lists and explains terms, acronyms, and definitions.

11 Mechanical, Packaging, and Orderable Information

The following pages include mechanical, packaging, and orderable information. This information is the most current data available for the designated devices. This data is subject to change without notice and revision of this document. For browser-based versions of this data sheet, refer to the left-hand navigation.

Copyright © 2023 Texas Instruments Incorporated

PACKAGING INFORMATION

Orderable part number	Status (1)	Material type (2)	Package | Pins	Package qty | Carrier	RoHS (3)	Lead finish/ Ball material (4)	MSL rating/ Peak reflow (5)	Op temp (°C)	Part marking (6)
LM2596S-12/NOPB	Active	Production	DDPAK/ TO-263 (KTT) | 5	45 | TUBE	ROHS Exempt	SN	Level-3-245C-168 HR	-	LM2596S -12 P+
LM2596S-12/NOPB.B	Active	Production	DDPAK/ TO-263 (KTT) | 5	45 | TUBE	ROHS Exempt	SN	Level-3-245C-168 HR	-40 to 125	LM2596S -12 P+
LM2596S-3.3/NOPB	Active	Production	DDPAK/ TO-263 (KTT) | 5	45 | TUBE	ROHS Exempt	SN	Level-3-245C-168 HR	-	LM2596S -3.3 P+
LM2596S-3.3/NOPB.B	Active	Production	DDPAK/ TO-263 (KTT) | 5	45 | TUBE	ROHS Exempt	SN	Level-3-245C-168 HR	-40 to 125	LM2596S -3.3 P+
LM2596S-5.0/NOPB	Active	Production	DDPAK/ TO-263 (KTT) | 5	45 | TUBE	ROHS Exempt	SN	Level-3-245C-168 HR	-	LM2596S -5.0 P+
LM2596S-5.0/NOPB.B	Active	Production	DDPAK/ TO-263 (KTT) | 5	45 | TUBE	ROHS Exempt	SN	Level-3-245C-168 HR	-40 to 125	LM2596S -5.0 P+
LM2596S-ADJ/NOPB	Active	Production	DDPAK/ TO-263 (KTT) | 5	45 | TUBE	ROHS Exempt	SN	Level-3-245C-168 HR	-40 to 125	LM2596S -ADJ P+
LM2596S-ADJ/NOPB.B	Active	Production	DDPAK/ TO-263 (KTT) | 5	45 | TUBE	ROHS Exempt	SN	Level-3-245C-168 HR	-40 to 125	LM2596S -ADJ P+
LM2596SX-12/NOPB	Active	Production	DDPAK/ TO-263 (KTT) | 5	500 | LARGE T&R	ROHS Exempt	SN	Level-3-245C-168 HR	-	LM2596S -12 P+
LM2596SX-12/NOPB.B	Active	Production	DDPAK/ TO-263 (KTT) | 5	500 | LARGE T&R	ROHS Exempt	SN	Level-3-245C-168 HR	-40 to 125	LM2596S -12 P+
LM2596SX-3.3/NOPB	Active	Production	DDPAK/ TO-263 (KTT) | 5	500 | LARGE T&R	ROHS Exempt	SN	Level-3-245C-168 HR	-	LM2596S -3.3 P+
LM2596SX-3.3/NOPB.B	Active	Production	DDPAK/ TO-263 (KTT) | 5	500 | LARGE T&R	ROHS Exempt	SN	Level-3-245C-168 HR	-40 to 125	LM2596S -3.3 P+
LM2596SX-5.0/NOPB	Active	Production	DDPAK/ TO-263 (KTT) | 5	500 | LARGE T&R	ROHS Exempt	SN	Level-3-245C-168 HR	-	LM2596S -5.0 P+
LM2596SX-5.0/NOPB.B	Active	Production	DDPAK/ TO-263 (KTT) | 5	500 | LARGE T&R	ROHS Exempt	SN	Level-3-245C-168 HR	-40 to 125	LM2596S -5.0 P+
LM2596SX-ADJ/NOPB	Active	Production	DDPAK/ TO-263 (KTT) | 5	500 | LARGE T&R	ROHS Exempt	SN	Level-3-245C-168 HR	-40 to 125	LM2596S -ADJ P+
LM2596SX-ADJ/NOPB.B	Active	Production	DDPAK/ TO-263 (KTT) | 5	500 | LARGE T&R	ROHS Exempt	SN	Level-3-245C-168 HR	-40 to 125	LM2596S -ADJ P+

Orderable part number	Status (1)	Material type (2)	Package | Pins	Package qty | Carrier	RoHS (3)	Lead finish/ Ball material (4)	MSL rating/ Peak reflow (5)	Op temp (°C)	Part marking (6)
LM2596T-12/LF03	Active	Production	TO-220 (NDH) | 5	45 | TUBE	Yes	SN	Level-1-NA-UNLIM	-	LM2596T -12 P+
LM2596T-12/LF03.B	Active	Production	TO-220 (NDH) | 5	45 | TUBE	Yes	SN	Level-1-NA-UNLIM	-40 to 125	LM2596T -12 P+
LM2596T-12/NOPB	Active	Production	TO-220 (NDH) | 5	45 | TUBE	Yes	SN	Level-1-NA-UNLIM	-	LM2596T -12 P+
LM2596T-12/NOPB.B	Active	Production	TO-220 (NDH) | 5	45 | TUBE	Yes	SN	Level-1-NA-UNLIM	-40 to 125	LM2596T -12 P+
LM2596T-3.3/LF03	Active	Production	TO-220 (NDH) | 5	45 | TUBE	Yes	SN	Level-1-NA-UNLIM	-	LM2596T -3.3 P+
LM2596T-3.3/LF03.B	Active	Production	TO-220 (NDH) | 5	45 | TUBE	Yes	SN	Level-1-NA-UNLIM	-40 to 125	LM2596T -3.3 P+
LM2596T-3.3/NOPB	Active	Production	TO-220 (NDH) | 5	45 | TUBE	Yes	SN	Level-1-NA-UNLIM	-	LM2596T -3.3 P+
LM2596T-3.3/NOPB.B	Active	Production	TO-220 (NDH) | 5	45 | TUBE	Yes	SN	Level-1-NA-UNLIM	-40 to 125	LM2596T -3.3 P+
LM2596T-5.0/LF03	Active	Production	TO-220 (NDH) | 5	45 | TUBE	Yes	SN	Level-1-NA-UNLIM	-	LM2596T -5.0 P+
LM2596T-5.0/LF03.B	Active	Production	TO-220 (NDH) | 5	45 | TUBE	Yes	SN	Level-1-NA-UNLIM	-40 to 125	LM2596T -5.0 P+
LM2596T-5.0/NOPB	Active	Production	TO-220 (NDH) | 5	45 | TUBE	Yes	SN	Level-1-NA-UNLIM	-	LM2596T -5.0 P+
LM2596T-5.0/NOPB.B	Active	Production	TO-220 (NDH) | 5	45 | TUBE	Yes	SN	Level-1-NA-UNLIM	-40 to 125	LM2596T -5.0 P+
LM2596T-ADJ/LF02	Active	Production	TO-220 (NEB) | 5	45 | TUBE	Yes	SN	Level-1-NA-UNLIM	-	LM2596T -ADJ P+
LM2596T-ADJ/LF02.B	Active	Production	TO-220 (NEB) | 5	45 | TUBE	Yes	SN	Level-1-NA-UNLIM	-40 to 125	LM2596T -ADJ P+
LM2596T-ADJ/NOPB	Active	Production	TO-220 (NDH) | 5	45 | TUBE	Yes	SN	Level-1-NA-UNLIM	-40 to 125	LM2596T -ADJ P+
LM2596T-ADJ/NOPB.B	Active	Production	TO-220 (NDH) | 5	45 | TUBE	Yes	SN	Level-1-NA-UNLIM	-40 to 125	LM2596T -ADJ P+

(1) **Status:** For more details on status, see our product life cycle.

(2) **Material type:** When designated, preproduction parts are prototypes/experimental devices, and are not yet approved or released for full production. Testing and final process, including without limitation quality assurance, reliability performance testing, and/or process qualification, may not yet be complete, and this item is subject to further changes or possible discontinuation. If available for ordering, purchases will be subject to an additional waiver at checkout, and are intended for early internal evaluation purposes only. These items are sold without warranties of any kind.

(3) **RoHS values:** Yes, No, RoHS Exempt. See the TI RoHS Statement for additional information and value definition.

(4) **Lead finish/Ball material:** Parts may have multiple material finish options. Finish options are separated by a vertical ruled line. Lead finish/Ball material values may wrap to two lines if the finish value exceeds the maximum column width.

(5) **MSL rating/Peak reflow:** The moisture sensitivity level ratings and peak solder (reflow) temperatures. In the event that a part has multiple moisture sensitivity ratings, only the lowest level per JEDEC standards is shown. Refer to the shipping label for the actual reflow temperature that will be used to mount the part to the printed circuit board.

(6) **Part marking:** There may be an additional marking, which relates to the logo, the lot trace code information, or the environmental category of the part.

Multiple part markings will be inside parentheses. Only one part marking contained in parentheses and separated by a "~" will appear on a part. If a line is indented then it is a continuation of the previous line and the two combined represent the entire part marking for that device.

Important Information and Disclaimer: The information provided on this page represents TI's knowledge and belief as of the date that it is provided. TI bases its knowledge and belief on information provided by third parties, and makes no representation or warranty as to the accuracy of such information. Efforts are underway to better integrate information from third parties. TI has taken and continues to take reasonable steps to provide representative and accurate information but may not have conducted destructive testing or chemical analysis on incoming materials and chemicals. TI and TI suppliers consider certain information to be proprietary, and thus CAS numbers and other limited information may not be available for release.

In no event shall TI's liability arising out of such information exceed the total purchase price of the TI part(s) at issue in this document sold by TI to Customer on an annual basis.

TAPE AND REEL INFORMATION

REEL DIMENSIONS

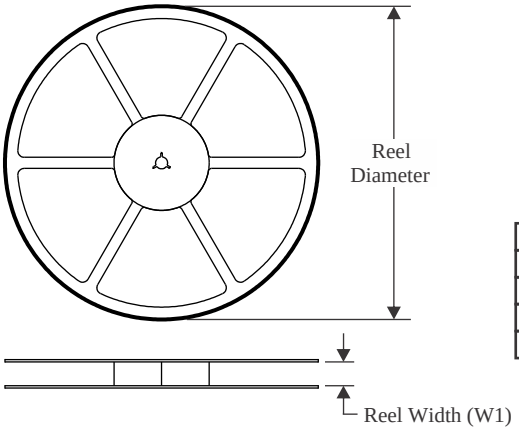

TAPE DIMENSIONS

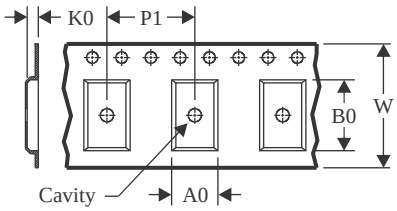

A0	Dimension designed to accommodate the component width
B0	Dimension designed to accommodate the component length
K0	Dimension designed to accommodate the component thickness
W	Overall width of the carrier tape
P1	Pitch between successive cavity centers

QUADRANT ASSIGNMENTS FOR PIN 1 ORIENTATION IN TAPE

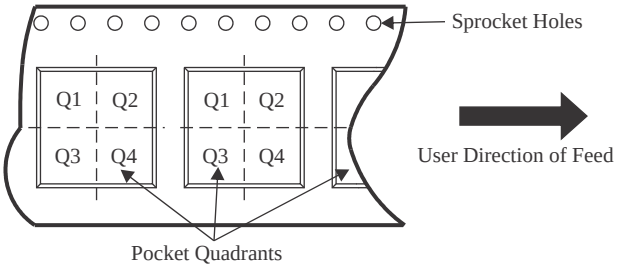

*All dimensions are nominal

Device	Package Type	Package Drawing	Pins	SPQ	Reel Diameter (mm)	Reel Width W1 (mm)	A0 (mm)	B0 (mm)	K0 (mm)	P1 (mm)	W (mm)	Pin1 Quadrant
LM2596SX-12/NOPB	DDPAK/ TO-263	KTT	5	500	330.0	24.4	10.75	14.85	5.0	16.0	24.0	Q2
LM2596SX-3.3/NOPB	DDPAK/ TO-263	KTT	5	500	330.0	24.4	10.75	14.85	5.0	16.0	24.0	Q2
LM2596SX-5.0/NOPB	DDPAK/ TO-263	KTT	5	500	330.0	24.4	10.75	14.85	5.0	16.0	24.0	Q2
LM2596SX-ADJ/NOPB	DDPAK/ TO-263	KTT	5	500	330.0	24.4	10.75	14.85	5.0	16.0	24.0	Q2

TAPE AND REEL BOX DIMENSIONS

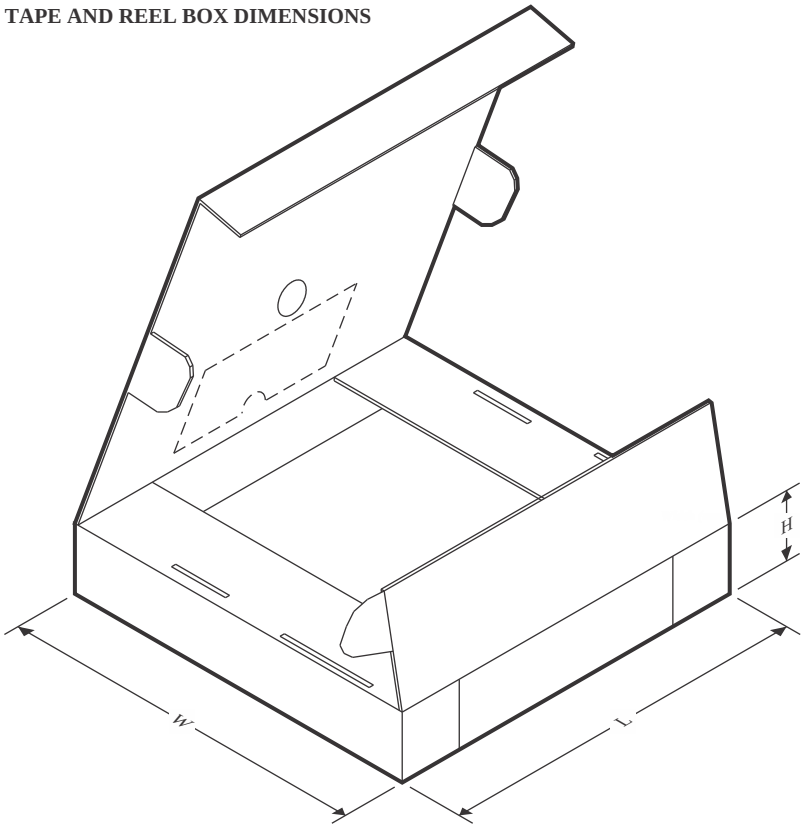

*All dimensions are nominal

Device	Package Type	Package Drawing	Pins	SPQ	Length (mm)	Width (mm)	Height (mm)
LM2596SX-12/NOPB	DDPAK/TO-263	KTT	5	500	356.0	356.0	45.0
LM2596SX-3.3/NOPB	DDPAK/TO-263	KTT	5	500	356.0	356.0	45.0
LM2596SX-5.0/NOPB	DDPAK/TO-263	KTT	5	500	356.0	356.0	45.0
LM2596SX-ADJ/NOPB	DDPAK/TO-263	KTT	5	500	356.0	356.0	45.0

TUBE

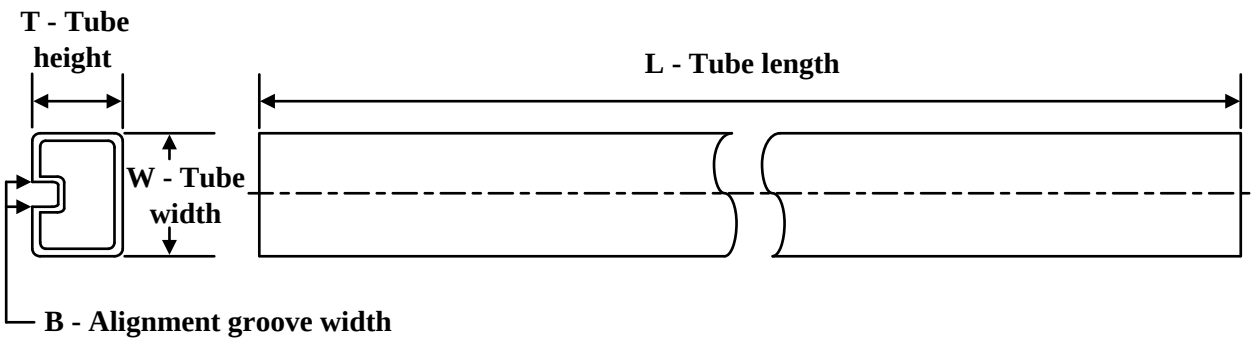

*All dimensions are nominal

Device	Package Name	Package Type	Pins	SPQ	L (mm)	W (mm)	T (µm)	B (mm)
LM2596S-12/NOPB	KTT	TO-263	5	45	502	25	8204.2	9.19
LM2596S-12/NOPB.B	KTT	TO-263	5	45	502	25	8204.2	9.19
LM2596S-3.3/NOPB	KTT	TO-263	5	45	502	25	8204.2	9.19
LM2596S-3.3/NOPB.B	KTT	TO-263	5	45	502	25	8204.2	9.19
LM2596S-5.0/NOPB	KTT	TO-263	5	45	502	25	8204.2	9.19
LM2596S-5.0/NOPB.B	KTT	TO-263	5	45	502	25	8204.2	9.19
LM2596S-ADJ/NOPB	KTT	TO-263	5	45	502	25	8204.2	9.19
LM2596S-ADJ/NOPB.B	KTT	TO-263	5	45	502	25	8204.2	9.19
LM2596T-12/LF03	NDH	TO-220	5	45	502	30	30048.2	10.74
LM2596T-12/LF03.B	NDH	TO-220	5	45	502	30	30048.2	10.74
LM2596T-12/NOPB	NDH	TO-220	5	45	502	30	30048.2	10.74
LM2596T-12/NOPB.B	NDH	TO-220	5	45	502	30	30048.2	10.74
LM2596T-3.3/LF03	NDH	TO-220	5	45	502	30	30048.2	10.74
LM2596T-3.3/LF03.B	NDH	TO-220	5	45	502	30	30048.2	10.74
LM2596T-3.3/NOPB	NDH	TO-220	5	45	502	30	30048.2	10.74
LM2596T-3.3/NOPB.B	NDH	TO-220	5	45	502	30	30048.2	10.74
LM2596T-5.0/LF03	NDH	TO-220	5	45	502	30	30048.2	10.74
LM2596T-5.0/LF03.B	NDH	TO-220	5	45	502	30	30048.2	10.74
LM2596T-5.0/NOPB	NDH	TO-220	5	45	502	30	30048.2	10.74
LM2596T-5.0/NOPB.B	NDH	TO-220	5	45	502	30	30048.2	10.74
LM2596T-ADJ/LF02	NEB	TO-220	5	45	502	30	30048.2	10.74
LM2596T-ADJ/LF02.B	NEB	TO-220	5	45	502	30	30048.2	10.74
LM2596T-ADJ/NOPB	NDH	TO-220	5	45	502	30	30048.2	10.74
LM2596T-ADJ/NOPB.B	NDH	TO-220	5	45	502	30	30048.2	10.74

NEB0005B

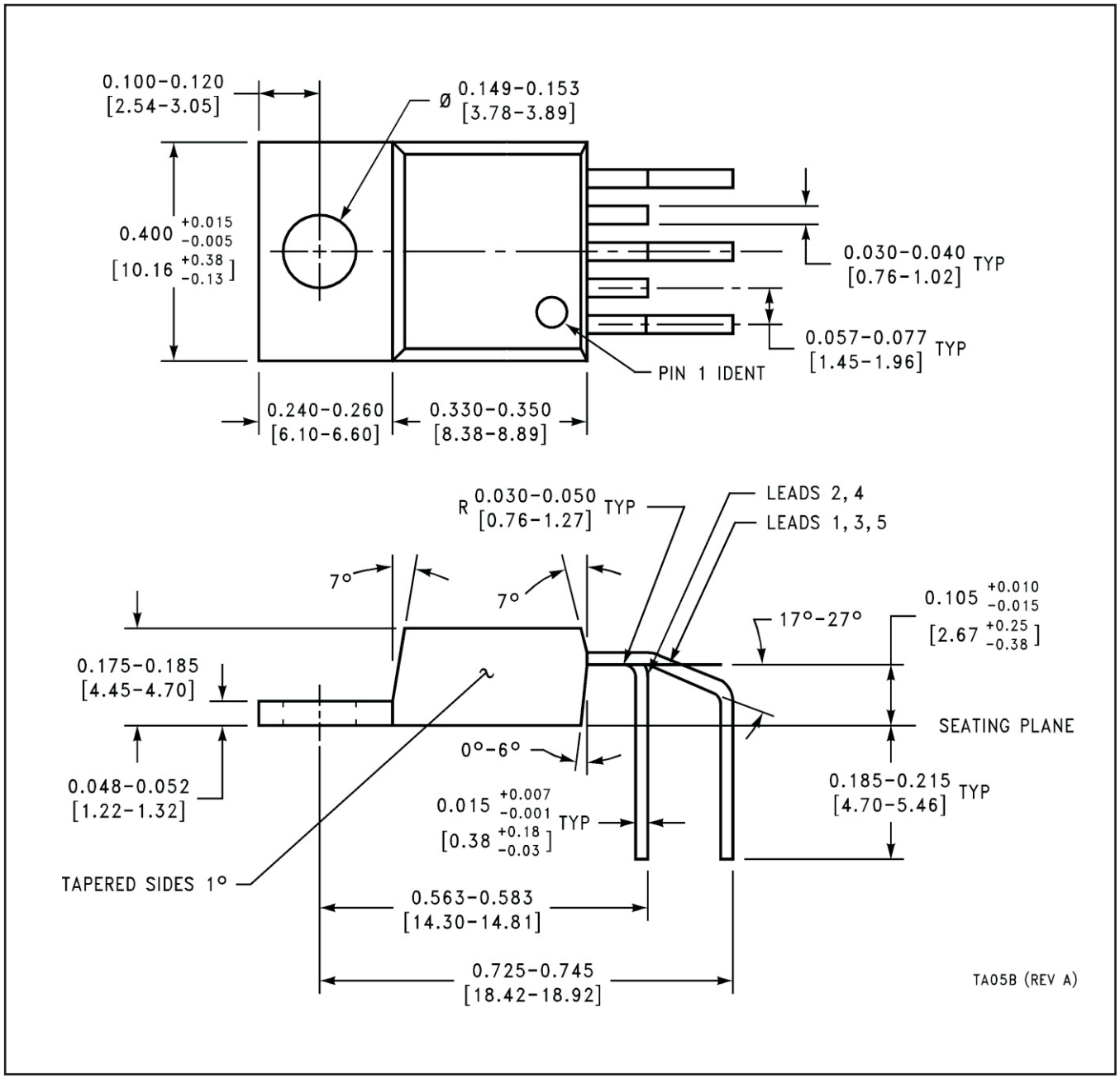
0.100-0.120
[2.54-3.05]
Ø 0.149-0.153
[3.78-3.89]
0.400 +0.015 -0.005
[10.16 +0.38 -0.13]
0.030-0.040 TYP
[0.76-1.02]
0.057-0.077 TYP
[1.45-1.96]
PIN 1 IDENT
0.240-0.260
[6.10-6.60]
0.330-0.350
[8.38-8.89]
R 0.030-0.050 TYP
[0.76-1.27]
LEADS 2, 4
LEADS 1, 3, 5
7°
7°
17°-27°
0.105 +0.010 -0.015
[2.67 +0.25 -0.38]
0.175-0.185
[4.45-4.70]
SEATING PLANE
0°-6°
0.048-0.052
[1.22-1.32]
0.185-0.215 TYP
[4.70-5.46]
0.015 +0.007 -0.001 TYP
[0.38 +0.18 -0.03]
TAPERED SIDES 1°
0.563-0.583
[14.30-14.81]
0.725-0.745
[18.42-18.92]
TA05B (REV A)

NEB0005E

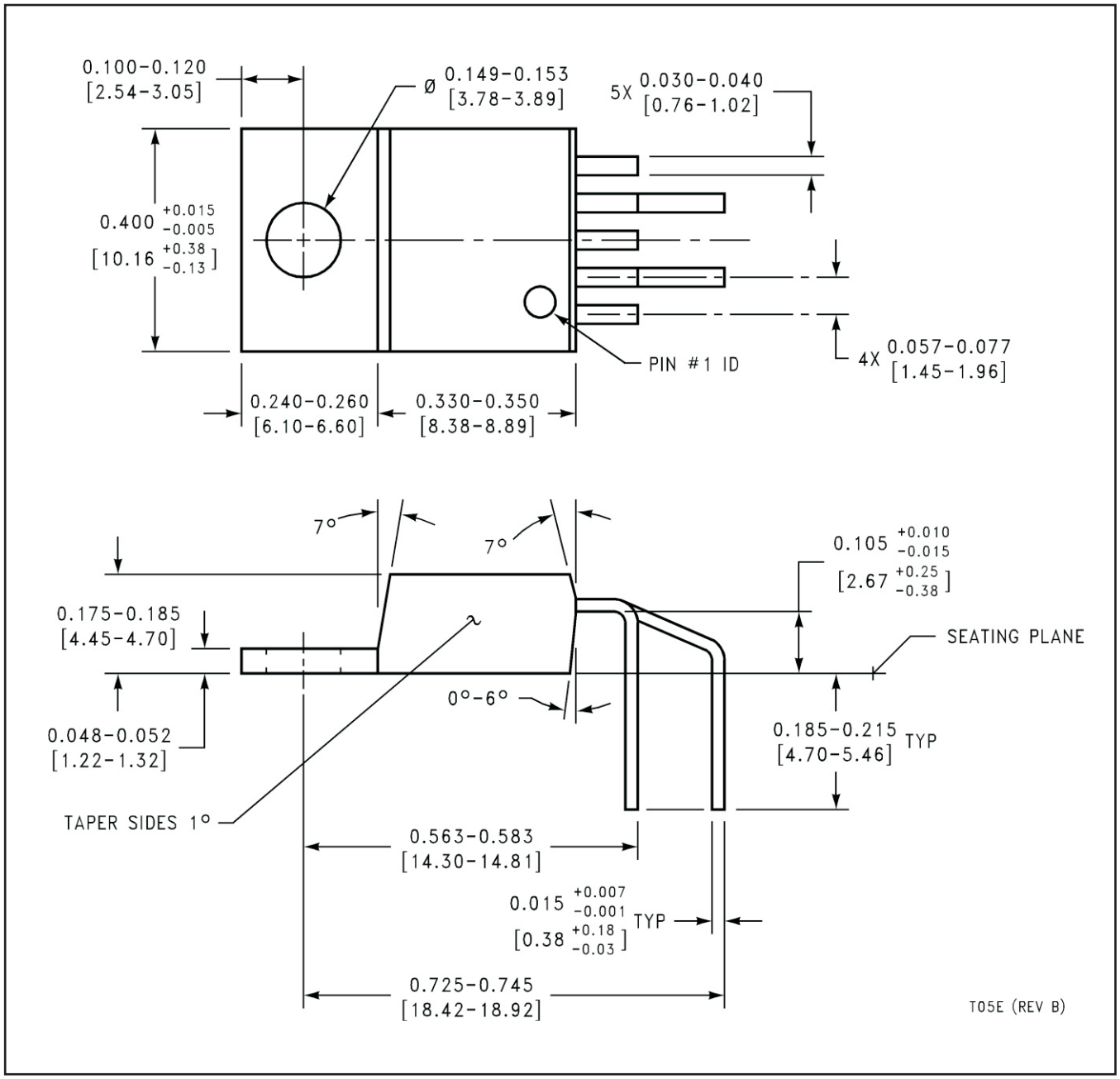
0.100-0.120
[2.54-3.05]
Ø 0.149-0.153
[3.78-3.89]
5X 0.030-0.040
[0.76-1.02]
0.400 +0.015 -0.005
[10.16 +0.38 -0.13]
PIN #1 ID
4X 0.057-0.077
[1.45-1.96]
0.240-0.260
[6.10-6.60]
0.330-0.350
[8.38-8.89]
7°
7°
0.105 +0.010 -0.015
[2.67 +0.25 -0.38]
0.175-0.185
[4.45-4.70]
SEATING PLANE
0°-6°
0.048-0.052
[1.22-1.32]
0.185-0.215 TYP
[4.70-5.46]
TAPER SIDES 1°
0.563-0.583
[14.30-14.81]
0.015 +0.007 -0.001 TYP
[0.38 +0.18 -0.03]
0.725-0.745
[18.42-18.92]
T05E (REV B)

NDH0005D

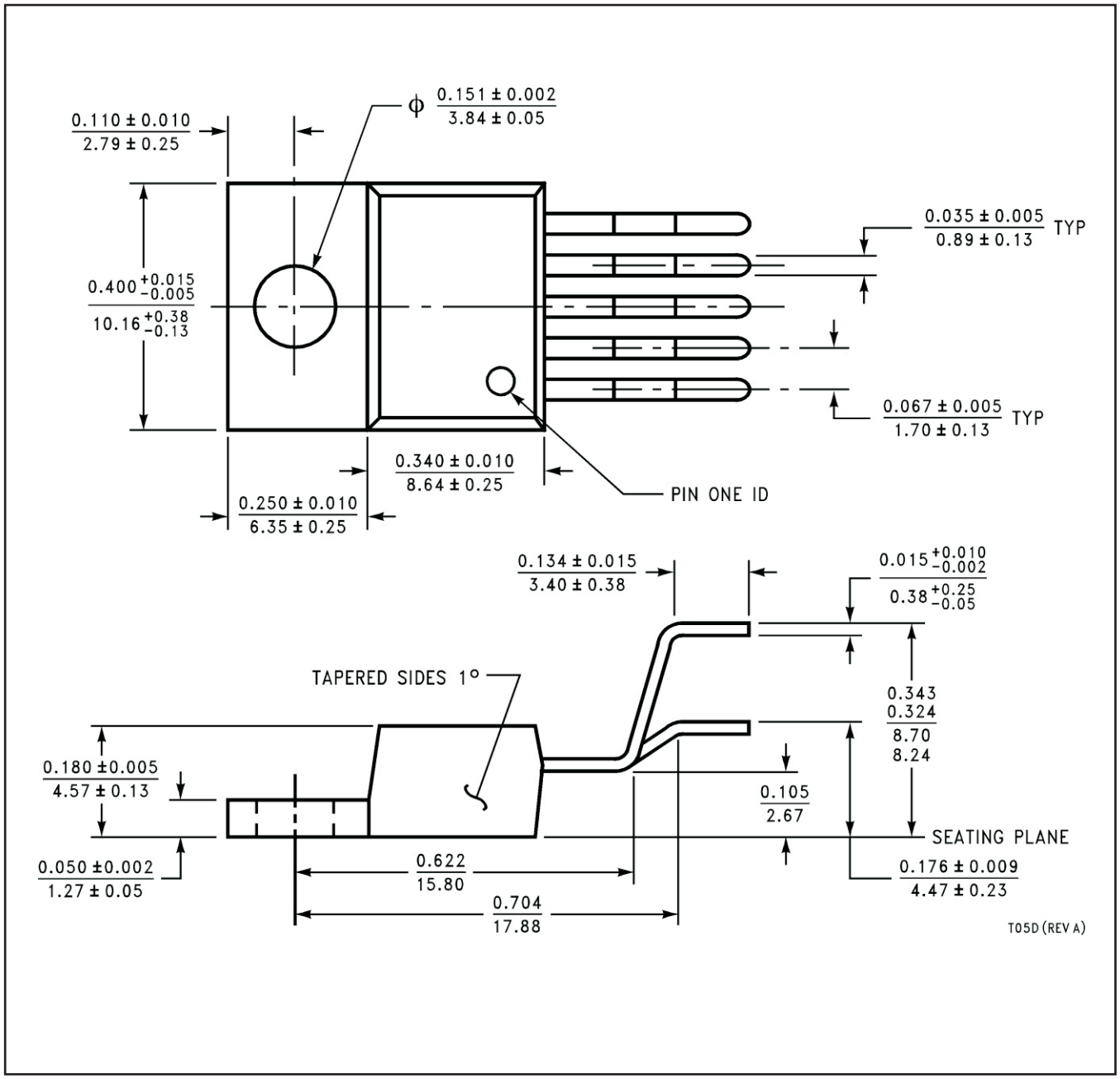
0.110 ± 0.010
2.79 ± 0.25
ϕ 0.151 ± 0.002
3.84 ± 0.05
0.035 ± 0.005
0.89 ± 0.13
TYP
0.400 +0.015 −0.005
10.16 +0.38 −0.13
0.067 ± 0.005
1.70 ± 0.13
TYP
0.340 ± 0.010
8.64 ± 0.25
PIN ONE ID
0.250 ± 0.010
6.35 ± 0.25
0.134 ± 0.015
3.40 ± 0.38
0.015 +0.010 −0.002
0.38 +0.25 −0.05
TAPERED SIDES 1°
0.343
0.324
8.70
8.24
0.180 ±0.005
4.57 ± 0.13
0.105
2.67
SEATING PLANE
0.050 ±0.002
1.27 ± 0.05
0.622
15.80
0.176 ± 0.009
4.47 ± 0.23
0.704
17.88
T05D (REV A)

KTT0005B

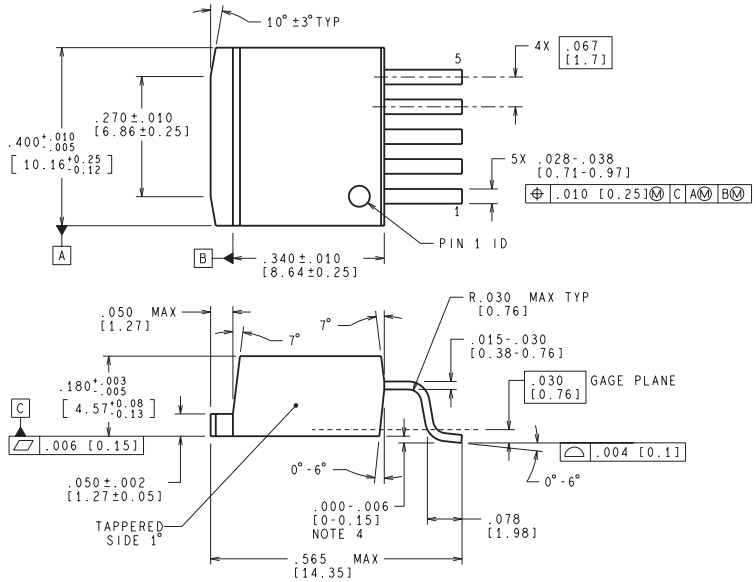

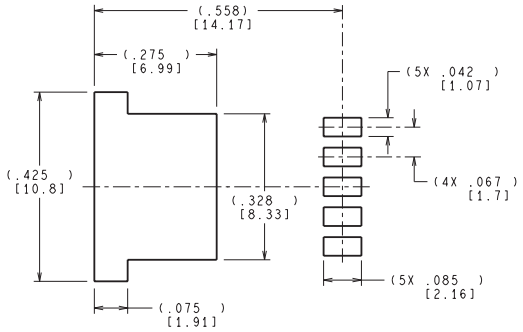

LAND PATTERN RECOMMENDATION

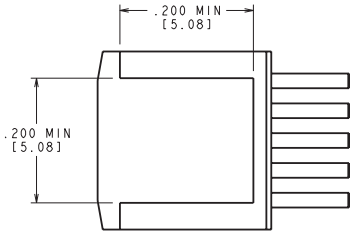

BOTTOM SIDE OF PACKAGE

CONTROLLING DIMENSION IS INCH
VALUES IN [ ] ARE MILLIMETERS
DIMENSIONS IN ( ) FOR REFERENCE ONLY

TS5B (Rev D)

IMPORTANT NOTICE AND DISCLAIMER

TI PROVIDES TECHNICAL AND RELIABILITY DATA (INCLUDING DATA SHEETS), DESIGN RESOURCES (INCLUDING REFERENCE DESIGNS), APPLICATION OR OTHER DESIGN ADVICE, WEB TOOLS, SAFETY INFORMATION, AND OTHER RESOURCES “AS IS” AND WITH ALL FAULTS, AND DISCLAIMS ALL WARRANTIES, EXPRESS AND IMPLIED, INCLUDING WITHOUT LIMITATION ANY IMPLIED WARRANTIES OF MERCHANTABILITY, FITNESS FOR A PARTICULAR PURPOSE OR NON-INFRINGEMENT OF THIRD PARTY INTELLECTUAL PROPERTY RIGHTS.

These resources are intended for skilled developers designing with TI products. You are solely responsible for (1) selecting the appropriate TI products for your application, (2) designing, validating and testing your application, and (3) ensuring your application meets applicable standards, and any other safety, security, regulatory or other requirements.

These resources are subject to change without notice. TI grants you permission to use these resources only for development of an application that uses the TI products described in the resource. Other reproduction and display of these resources is prohibited. No license is granted to any other TI intellectual property right or to any third party intellectual property right. TI disclaims responsibility for, and you will fully indemnify TI and its representatives against, any claims, damages, costs, losses, and liabilities arising out of your use of these resources.

TI’s products are provided subject to TI’s Terms of Sale or other applicable terms available either on ti.com or provided in conjunction with such TI products. TI’s provision of these resources does not expand or otherwise alter TI’s applicable warranties or warranty disclaimers for TI products.

TI objects to and rejects any additional or different terms you may have proposed.

Mailing Address: Texas Instruments, Post Office Box 655303, Dallas, Texas 75265
Copyright © 2025, Texas Instruments Incorporated