LM111, LM211, LM311 Differential Comparators

1 Features

- Fast Response Time: 165 ns
- Strobe Capability
- Maximum Input Bias Current: 300 nA
- Maximum Input Offset Current: 70 nA
- Can Operate From Single 5-V Supply
- Available in Q-Temp Automotive
  - High-Reliability Automotive Applications
  - Configuration Control and Print Support
  - Qualification to Automotive Standards
- On Products Compliant to MIL-PRF-38535, All Parameters Are Tested Unless Otherwise Noted. On All Other Products, Production Processing Does Not Necessarily Include Testing of All Parameters.

2 Applications

- Desktop PCs
- Body Control Modules
- White Goods
- Building Automation
- Oscillators
- Peak Detectors

3 Description

The LM111, LM211, and LM311 devices are single high-speed voltage comparators. These devices are designed to operate from a wide range of power-supply voltages, including ±15-V supplies for operational amplifiers and 5-V supplies for logic systems. The output levels are compatible with most TTL and MOS circuits. These comparators are capable of driving lamps or relays and switching voltages up to 50 V at 50 mA. All inputs and outputs can be isolated from system ground. The outputs can drive loads referenced to ground, V_{CC+} or V_{CC-}. Offset balancing and strobe capabilities are available, and the outputs can be wire-OR connected. If the strobe is low, the output is in the off state, regardless of the differential input.

Device Information(1)

PART NUMBER	PACKAGE	BODY SIZE
LM111FK	LCCC (20)	8.89 mm × 8.89 mm
LM111JG	CDIP (8)	9.60 mm × 6.67 mm
LM311PS	SO (8)	6.20 mm × 5.30 mm
LM211D	SOIC (8)	4.90 mm × 3.91 mm
LM311D		
LM211P	PDIP (8)	9.81 mm × 6.35 mm
LM311P		
LM211PW	TSSOP (8)	3.00 mm × 4.40 mm
LM311PW		

(1) For all available packages, see the orderable addendum at the end of the data sheet.

Simplified Schematic

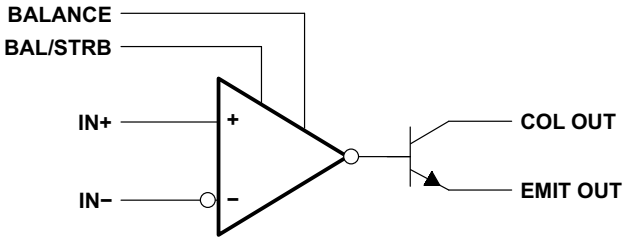

Copyright © 2016, Texas Instruments Incorporated

An IMPORTANT NOTICE at the end of this data sheet addresses availability, warranty, changes, use in safety-critical applications, intellectual property matters and other important disclaimers. PRODUCTION DATA.

Table of Contents

1 Features ... 1
2 Applications ... 1
3 Description ... 1
4 Revision History ... 2
5 Pin Configuration and Functions ... 3
6 Specifications ... 4
6.1 Absolute Maximum Ratings ... 4
6.2 ESD Ratings ... 4
6.3 Recommended Operating Conditions ... 4
6.4 Thermal Information (8-Pin Packages) ... 5
6.5 Thermal Information (20-Pin Package) ... 5
6.6 Electrical Characteristics ... 6
6.7 Switching Characteristics ... 6
6.8 Typical Characteristics ... 7
7 Parameter Measurement Information ... 9
8 Detailed Description ... 10
8.1 Overview ... 10
8.2 Functional Block Diagram ... 10
8.3 Feature Description ... 11
8.4 Device Functional Modes ... 11
9 Application and Implementation ... 12
9.1 Application Information ... 12
9.2 Typical Application ... 12
9.3 System Examples ... 14
10 Power Supply Recommendations ... 22
11 Layout ... 22
11.1 Layout Guidelines ... 22
11.2 Layout Example ... 22
12 Device and Documentation Support ... 23
12.1 Related Links ... 23
12.2 Receiving Notification of Documentation Updates 23
12.3 Community Resources ... 23
12.4 Trademarks ... 23
12.5 Electrostatic Discharge Caution ... 23
12.6 Glossary ... 23
13 Mechanical, Packaging, and Orderable Information ... 23

4 Revision History

NOTE: Page numbers for previous revisions may differ from page numbers in the current version.

Changes from Revision J (January 2017) to Revision K	Page
• Changed Human body model (HBM) from: ±1000 to: ±500 in *ESD Ratings* table	4

Changes from Revision I (June 2015) to Revision J	Page
• Changed the data sheet title From: LMx11 Quad Differential Comparators To: LM111, LM211, LM311 Differential Comparators	1
• Updated the *Applications* list	1
• Updated the *Thermal Information (8-Pin Packages)* table	5
• Changed text From: "over a −25°C to +85°C temperature range..." To: ""over a −40°C to +85°C temperature range..." in the *Overview* section	10
• Added text "The LM311 has a temperature range of −40°C to +125°C." to the *Overview* section	10

Changes from Revision H (August 2003) to Revision I	Page
• Updated *Features* with Military Disclaimer.	1
• Added *Applications*, *Device Information* table, *Pin Configuration and Functions* section, *ESD Ratings* table, *Feature Description* section, *Device Functional Modes*, *Application and Implementation* section, *Power Supply Recommendations* section, *Layout* section, *Device and Documentation Support* section, and *Mechanical, Packaging, and Orderable Information* section. No specification changes.	1

Copyright © 1973–2017, Texas Instruments Incorporated

5 Pin Configuration and Functions

LMx11 D, JG, P, PS, or PW Package
8-Pin SOIC, CDIP, PDIP, SO or TSSOP
Top View

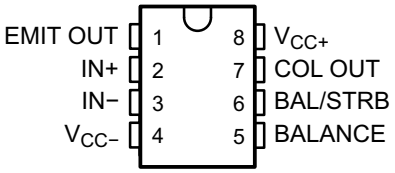

LM111 FK Package
20-Pin LCCC(1)
Top View

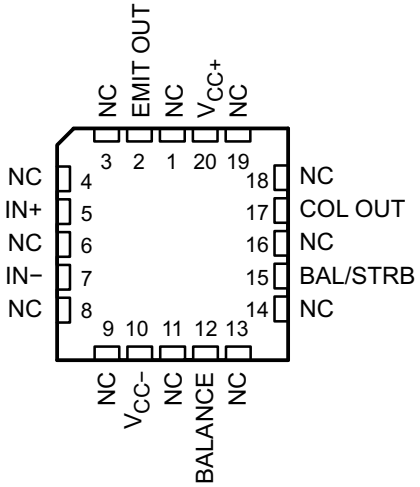

(1) NC = No internal connection

Pin Functions

PIN					I/O(1)	DESCRIPTION
NAME	LM211, LM311	LM311	LM111	LM111		
	SOIC, PDIP, TSSOP	SO	CDIP	LCCC		
IN+	2	2	2	5	I	Noninverting comparator
IN–	3	3	3	7	I	Inverting input comparator
BALANCE	5	5	5	12	I	Balance
BAL/STRB	6	6	6	15	I	Strobe
COL OUT	7	7	7	17	O	Output collector comparator
EMIT OUT	1	1	1	2	O	Output emitter comparator
V_{CC}–	4	4	4	10	—	Negative supply
V_{CC}+	8	8	8	20	—	Positive supply
NC	—	—	—	1	—	No connect (No internal connection)
				3		
				4		
				6		
				8		
				9		
				11		
				13		
				14		
				16		
				18		
				19		

(1) I = Input, O = Output

6 Specifications

6.1 Absolute Maximum Ratings

over operating free-air temperature range (unless otherwise noted)[1]

			MIN	MAX	UNIT
	Supply voltage	V_{CC+}[2]		18	V
		V_{CC-}[2]		–18	
		$V_{CC+} - V_{CC-}$		36	
V_{ID}	Differential input voltage[3]			±30	V
V_I	Input voltage (either input)[2][4]			±15	V
	Voltage from emitter output to V_{CC-}			30	V
	Voltage from collector output to V_{CC-}	LM111		50	V
		LM211		50	
		LM211Q		50	
		LM311		40	
	Duration of output short circuit to ground			10	s
T_J	Operating virtual-junction temperature			150	°C
	Case temperature for 60 s	FK package		260	°C
	Lead temperature 1,6 mm (1/16 inch) from case, 10 s	JG package		300	°C
	Lead temperature 1,6 mm (1/16 inch) from case, 60 s	D, P, PS, or PW package		260	°C
T_{stg}	Storage temperature		−65	150	°C

(1) Stresses beyond those listed under *Absolute Maximum Ratings* may cause permanent damage to the device. These are stress ratings only, and functional operation of the device at these or any other conditions beyond those indicated under *Recommended Operating Conditions* is not implied. Exposure to absolute-maximum-rated conditions for extended periods may affect device reliability.
(2) All voltage values, unless otherwise noted, are with respect to the midpoint between V_{CC+} and V_{CC-}.
(3) Differential voltages are at IN+ with respect to IN–.
(4) The magnitude of the input voltage must never exceed the magnitude of the supply voltage or ±15 V, whichever is less.

6.2 ESD Ratings

			VALUE	UNIT
$V_{(ESD)}$	Electrostatic discharge	Human body model (HBM), per ANSI/ESDA/JEDEC JS-001[1]	±500	V
		Charged-device model (CDM), per JEDEC specification JESD22-C101[2]	±750	

(1) JEDEC document JEP155 states that 500-V HBM allows safe manufacturing with a standard ESD control process.
(2) JEDEC document JEP157 states that 250-V CDM allows safe manufacturing with a standard ESD control process.

6.3 Recommended Operating Conditions

			MIN	MAX	UNIT
$V_{CC+} - V_{CC-}$	Supply voltage		3.5	30	V
V_I	Input voltage ($\|V_{CC+}\| \leq 15$ V)		$V_{CC-} + 0.5$	$V_{CC+} - 1.5$	V
T_A	Operating free-air temperature range	LM111	–55	125	°C
		LM211	–40	85	
		LM211Q	–40	125	
		LM311	0	70	

Copyright © 1973–2017, Texas Instruments Incorporated

6.4 Thermal Information (8-Pin Packages)

THERMAL METRIC[1]		LM211, LM311			LM311	LM111	UNIT
		D (SOIC)	P (PDIP)	PW (TSSOP)	PS (SO)	JG (CDIP)	
		8 PINS	8 PINS	8 PINS	8 PINS	8 PINS	
$R_{\theta JA}$	Junction-to-ambient thermal resistance	114.3	57.5	162	121.8	—	°C/W
$R_{\theta JC(top)}$	Junction-to-case (top) thermal resistance	60.7	47.3	44.6	81.6	14.5	°C/W
$R_{\theta JB}$	Junction-to-board thermal resistance	54.5	34.6	93	66.5	—	°C/W
ψ_{JT}	Junction-to-top characterization parameter	17.4	24.9	2.6	31.4	—	°C/W
ψ_{JB}	Junction-to-board characterization parameter	54	34.5	90.8	65.8	—	°C/W

(1) For more information about traditional and new thermal metrics, see the *Semiconductor and IC Package Thermal Metrics* application report.

6.5 Thermal Information (20-Pin Package)

THERMAL METRIC[1]		LM111	UNIT
		FK (LCCC)	
		20 PINS	
$R_{\theta JC(top)}$	Junction-to-case (top) thermal resistance	5.61	°C/W

(1) For more information about traditional and new thermal metrics, see the *Semiconductor and IC Package Thermal Metrics* application report.

Copyright © 1973–2017, Texas Instruments Incorporated

6.6 Electrical Characteristics

at specified free-air temperature, $V_{CC\pm}$ = ±15 V (unless otherwise noted)

PARAMETER		TEST CONDITIONS		T_A (1)	LM111 LM211 LM211Q			LM311			UNIT
					MIN	TYP (2)	MAX	MIN	TYP (2)	MAX	
V_{IO}	Input offset voltage	See (3)		25°C		0.7	3		2	7.5	mV
				Full range			4			10	
I_{IO}	Input offset current	See (3)		25°C		4	10		6	50	nA
				Full range			20			70	
I_{IB}	Input bias current	1 V ≤ V_O ≤ 14 V		25°C		75	100		100	250	nA
				Full range			150			300	
$I_{IL(S)}$	Low-level strobe current (4)	$V_{(strobe)}$ = 0.3 V, V_{ID} ≤ –10 mV		25°C		–3			–3		mA
V_{ICR}	Common-mode input-voltage range (3)	Lower range		Full range		–14.7	–14.5		–14.7	–14.5	V
		Upper range			13	13.8		13	13.8		
A_{VD}	Large-signal differential-voltage amplification	5 V ≤ V_O ≤ 35 V, R_L = 1 kΩ		25°C	40	200		40	200		V/mV
I_{OH}	High-level (collector) output leakage current	$I_{(strobe)}$ = –3 mA, V_{ID} = 5 mV	V_{OH} = 35 V	25°C		0.2	10				nA
				Full range			0.5				µA
		V_{ID} = 5 mV, V_{OH} = 35 V		25°C					0.2	50	nA
V_{OL}	Low-level (collector-to-emitter) output voltage	I_{OL} = 50 mA	V_{ID} = –5 mV	25°C		0.75	1.5				V
			V_{ID} = –10 mV	25°C					0.75	1.5	
		V_{CC+} = 4.5 V, V_{CC-} = 0 V, I_{OL} = 8 mA	V_{ID} = –6 mV	Full range		0.23	0.4				
			V_{ID} = –10 mV	Full range					0.23	0.4	
I_{CC}+	Supply current from V_{CC+} output low	V_{ID} = –10 mV,	No load	25°C		5.1	6		5.1	7.5	mA
I_{CC}–	Supply current from V_{CC-} output high	V_{ID} = 10 mV,	No load	25°C		–4.1	–5		–4.1	–5	mA

(1) Unless otherwise noted, all characteristics are measured with BALANCE and BAL/STRB open and EMIT OUT grounded. Full range for LM111 is –55°C to 125°C, for LM211 is –40°C to 85°C, for LM211Q is –40°C to 125°C, and for LM311 is 0°C to 70°C.
(2) All typical values are at T_A = 25°C.
(3) The offset voltages and offset currents given are the maximum values required to drive the collector output up to 14 V or down to 1 V with a pullup resistor of 7.5 kΩ to V_{CC+}. These parameters actually define an error band and take into account the worst-case effects of voltage gain and input impedance.
(4) The strobe must not be shorted to ground; it must be current driven at –3 mA to –5 mA (see Figure 18 and Figure 31).

6.7 Switching Characteristics

$V_{CC\pm}$ = ±15 V, T_A = 25°C

PARAMETER	TEST CONDITIONS	LM111 LM211 LM211Q LM311	UNIT
		TYP	
Response time, low-to-high-level output	See (1) R_C = 500 Ω to 5 V, C_L = 5 pF, see (2)	115	ns
Response time, high-to-low-level output	See (1)	165	ns

(1) The response time specified is for a 100-mV input step with 5-mV overdrive and is the interval between the input step function and the instant when the output crosses 1.4 V.
(2) The package thermal impedance is calculated in accordance with MIL-STD-883.

Copyright © 1973–2017, Texas Instruments Incorporated

6.8 Typical Characteristics

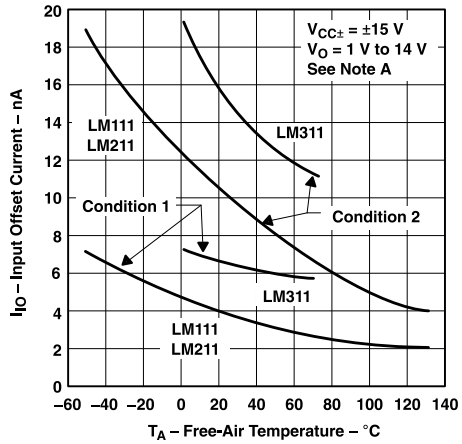

Condition 1 is with BALANCE and BAL/STRB open.
Condition 2 is with BALANCE and BAL/STRB connected to V_{CC+}.

Figure 1. Input Offset Current vs Free-Air Temperature

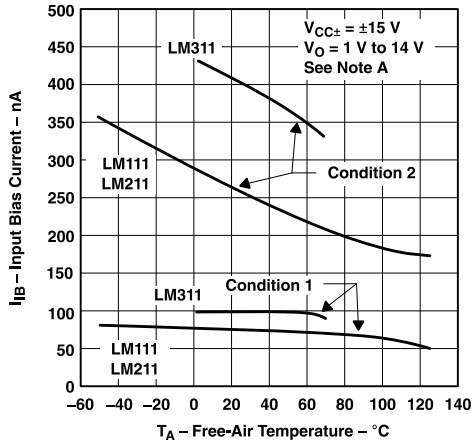

Condition 1 is with BALANCE and BAL/STRB open.
Condition 2 is with BALANCE and BAL/STRB connected to V_{CC+}.

Figure 2. Input Bias Current vs Free-Air Temperature

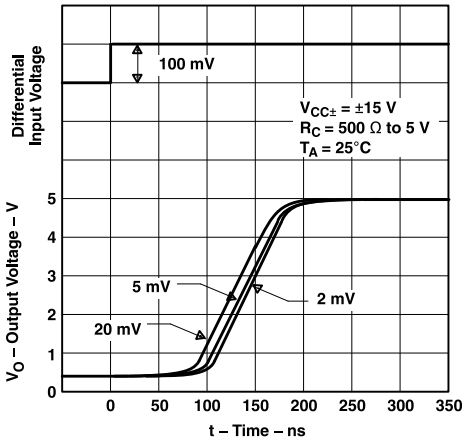

Figure 3. Output Response for Various Input Overdrives

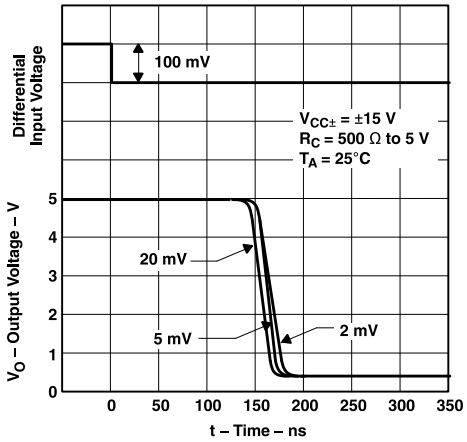

Figure 4. Output Response for Various Input Overdrives

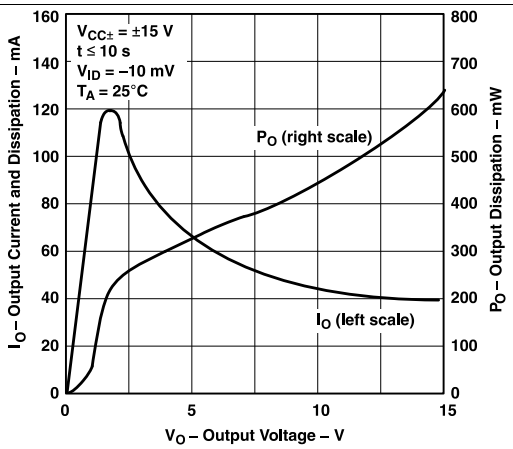

Figure 5. Output Current and Dissipation vs Output Voltage

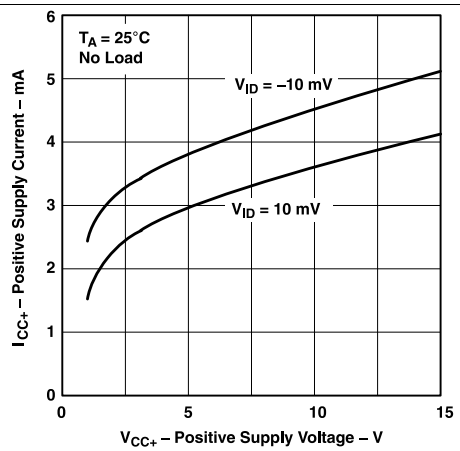

Figure 6. Positive Supply Current vs Positive Supply Voltage

Typical Characteristics (continued)

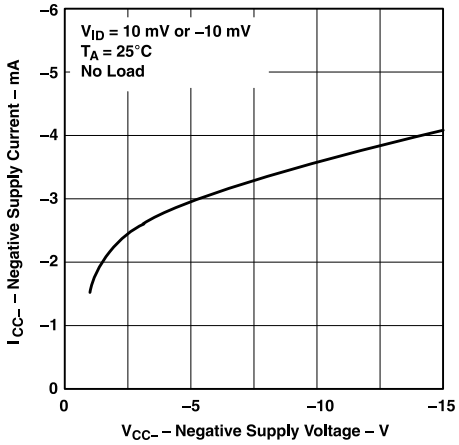

Figure 7. Negative Supply Current vs Negative Supply Voltage

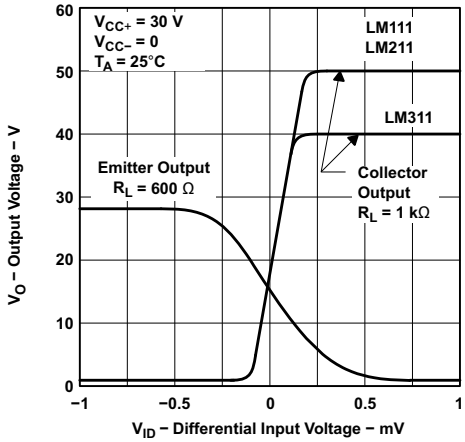

Figure 8. Voltage Transfer Characteristics and Test Circuits

Copyright © 1973–2017, Texas Instruments Incorporated

7 Parameter Measurement Information

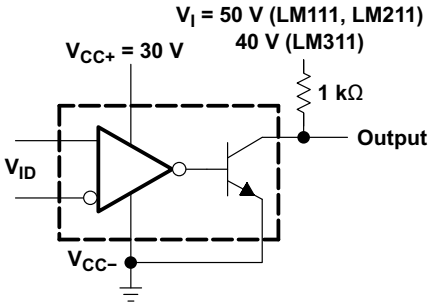

Copyright © 2016, Texas Instruments Incorporated

Figure 9. Collector Output Transfer Characteristic Test Circuit

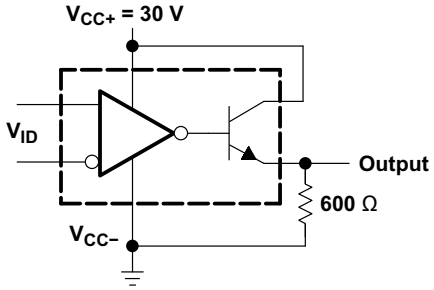

Copyright © 2016, Texas Instruments Incorporated

Figure 10. Emitter Output Transfer Characteristic Test Circuit

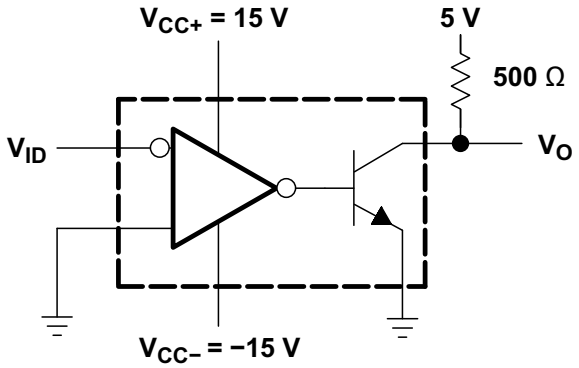

Copyright © 2016, Texas Instruments Incorporated

Figure 11. Test Circuit for Figure 3 and Figure 4

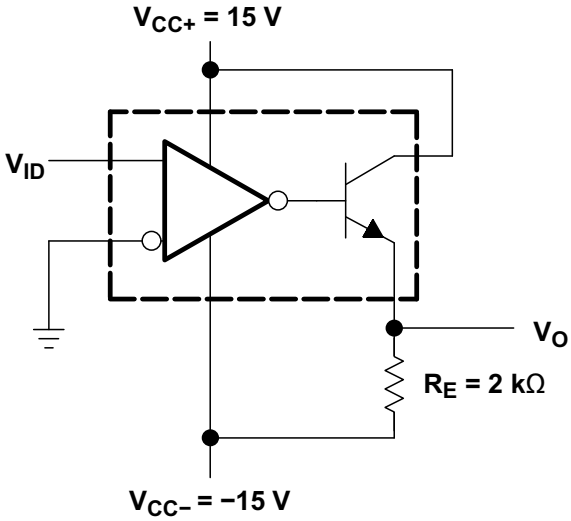

Copyright © 2016, Texas Instruments Incorporated

Figure 12. Test Circuit for Figure 14 and Figure 15

8 Detailed Description

8.1 Overview

The LM111, LM211 and LM311 are voltage comparators that have input currents nearly a thousand times lower than legacy standard devices. They are also designed to operate over a wider range of supply voltages: from standard ±15V op amp supplies down to the single 5-V supply used for IC logic. Their output is compatible with RTL, DTL and TTL as well as MOS circuits. Further, they can drive lamps or relays, switching voltages up to 50 V at currents as high as 50 mA.

Both the inputs and the outputs of the LM111, LM211 or the LM311 can be isolated from system ground, and the output can drive loads referred to ground, the positive supply or the negative supply. Offset balancing and strobe capability are provided and outputs can be wire ORed. The LM211 is identical to the LM111, except that its performance is specified over a −40°C to +85°C temperature range instead of −55°C to +125°C. The LM311 has a temperature range of 0°C to +70°C. The LM211Q has a temperature range of −40°C to +125°C.

8.2 Functional Block Diagram

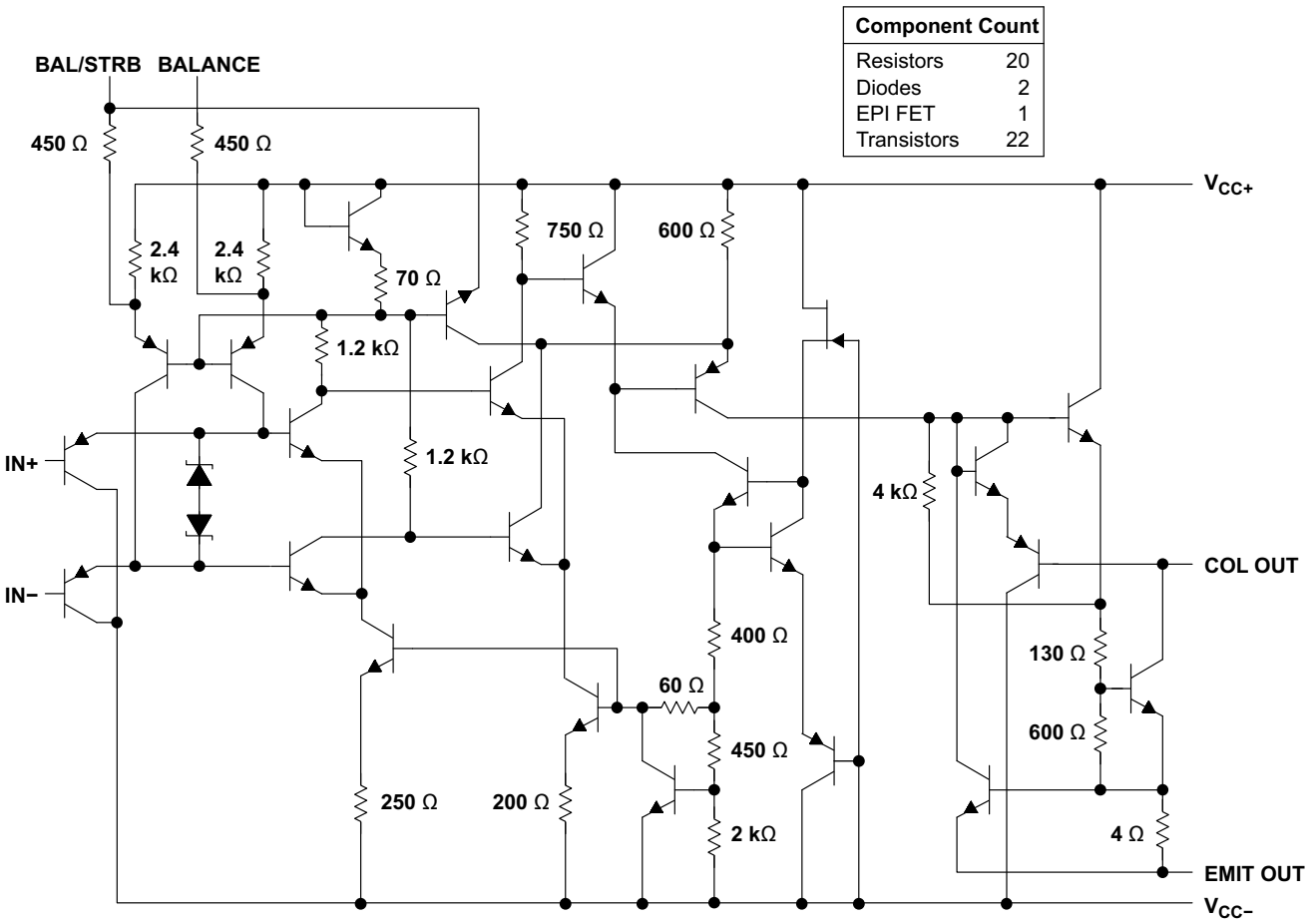

Copyright © 2016, Texas Instruments Incorporated

Copyright © 1973–2017, Texas Instruments Incorporated

8.3 Feature Description

LMx11 consists of a PNP input stage to sense voltages near V_{CC-}. It also contains balance and strobe pins for external offset adjustment or trimming.

The input stage is followed by a very high gain stage for very fast response after a voltage difference on the input pins have been sensed.

This is then followed by the output stage that consists of an open collector NPN (pulldown or low-side) transistor. Unlike most open drain comparators, this NPN output stage has an isolated emitter from V_{CC-}, allowing this device to set the V_{OL} output value for collector output.

8.4 Device Functional Modes

8.4.1 Voltage Comparison

The LMx11 operates solely as a voltage comparator, comparing the differential voltage between the positive and negative pins and outputting a logic low or high impedance (logic high with pullup) based on the input differential polarity.

9 Application and Implementation

NOTE

Information in the following applications sections is not part of the TI component specification, and TI does not warrant its accuracy or completeness. TI's customers are responsible for determining suitability of components for their purposes. Validate and test the design implementation to confirm system functionality.

9.1 Application Information

A typical LMx11 application compares a single signal to a reference or two signals against each other. Many users take advantage of the open-drain output to drive the comparison logic output to a logic voltage level to an MCU or logic device. The wide supply range and high voltage capability makes LMx11 optimal for level shifting to a higher or lower voltage.

9.2 Typical Application

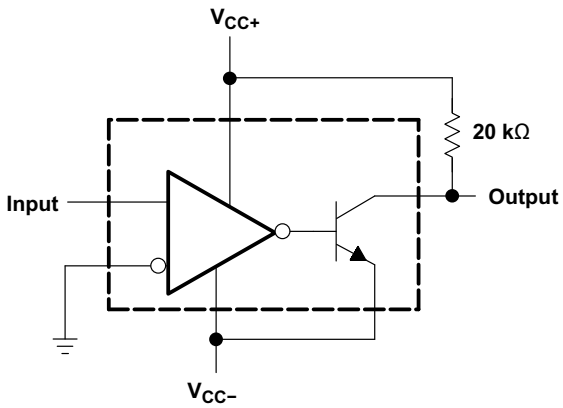

Copyright © 2016, Texas Instruments Incorporated

Figure 13. Zero-Crossing Detector

9.2.1 Design Requirements

For this design example, use the parameters listed in Table 1 as the input parameters.

Table 1. Design Parameters

PARAMETER		MIN	TYP	MAX	UNIT
V_{IN}	Input voltage range	–15		13	V
V_{CC+}	Positive supply voltage			15	V
V_{CC-}	Negative supply voltage	–15			
I_{OUT}	Output current			20	mA

9.2.2 Detailed Design Procedure

When using LMx11 in a general comparator application, determine the following:

- Input voltage range
- Minimum overdrive voltage
- Output and drive current
- Response time

Copyright © 1973–2017, Texas Instruments Incorporated

9.2.2.1 Input Voltage Range

When choosing the input voltage range, consider the input common mode voltage range (V_{ICR}). Operation outside of this range can yield incorrect comparisons.

The following list describes the outcomes of some input voltage situations.

- When both IN– and IN+ are both within the common-mode range:
  - If IN– is higher than IN+ and the offset voltage, the output is low and the output transistor is sinking current
  - If IN– is lower than IN+ and the offset voltage, the output is high impedance and the output transistor is not conducting
- When IN– is higher than common mode and IN+ is within common mode, the output is low and the output transistor is sinking current
- When IN+ is higher than common mode and IN– is within common mode, the output is high impedance and the output transistor is not conducting
- When IN– and IN+ are both higher than common mode, the output is undefined

9.2.2.2 Minimum Overdrive Voltage

Overdrive voltage is the differential voltage produced between the positive and negative inputs of the comparator over the offset voltage (V_{IO}). To make an accurate comparison the Overdrive voltage (V_{OD}) must be higher than the input offset voltage (V_{IO}). Overdrive voltage can also determine the response time of the comparator, with the response time decreasing with increasing overdrive. Figure 14 and Figure 15 show positive and negative response times with respect to overdrive voltage.

9.2.2.3 Output and Drive Current

Output current is determined by the pullup resistance and pullup voltage. The output current produces a output low voltage (V_{OL}) from the comparator, in which V_{OL} is proportional to the output current. Use Figure 5 to determine V_{OL} based on the output current.

The output current can also effect the transient response.

9.2.2.4 Response Time

The load capacitance (C_L), pullup resistance (R_{PULLUP}), and equivalent collector-emitter resistance (R_{CE}) levels determine the transient response. Equation 1 approximates the positive response time. Equation 2 approximates the negative response time. R_{CE} can be determine by taking the slope of Figure 5 in the linear region at the desired temperature, or by Equation 3.

$$\tau_P \cong R_{PULLUP} \times C_L \tag{1}$$

$$\tau_N \cong R_{CE} \times C_L \tag{2}$$

$$R_{CE} = \frac{V_{OL}}{I_{OUT}}$$

where

- V_{OL} is the low-level output voltage
- I_{OUT} is the output current (3)

9.2.3 Application Curves

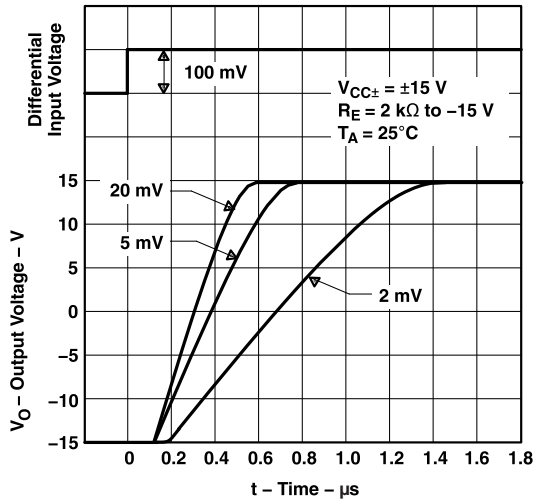

Figure 14. Output Response for Various Input Overdrives

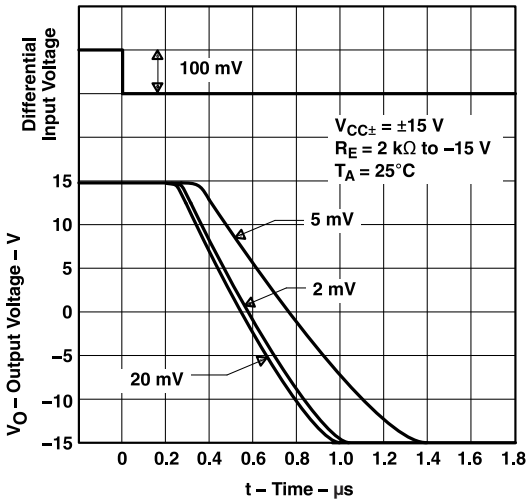

Figure 15. Output Response for Various Input Overdrives

9.3 System Examples

Figure 16 through Figure 33 show various applications for the LM111, LM211, and LM311 comparators.

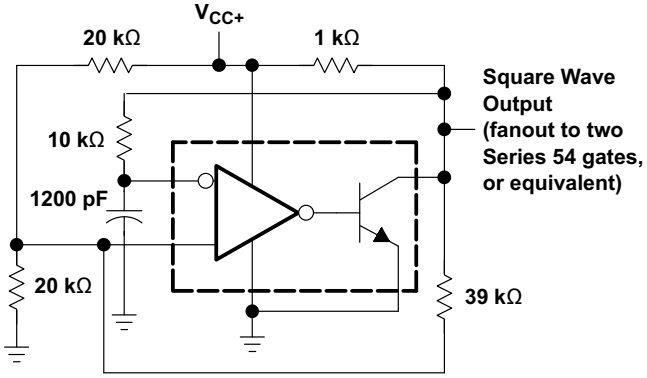

Copyright © 2016, Texas Instruments Incorporated

Figure 16. 100-kHz Free-Running Multivibrator

Copyright © 1973–2017, Texas Instruments Incorporated

System Examples (continued)

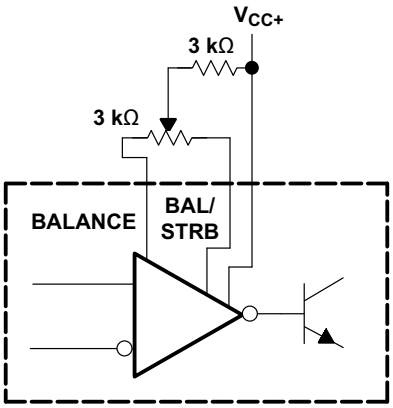

Copyright © 2016, Texas Instruments Incorporated

If offset balancing is not used, the BALANCE and BAL/STRB pins must be unconnected. It is also acceptable to short pins together.

Figure 17. Offset Balancing

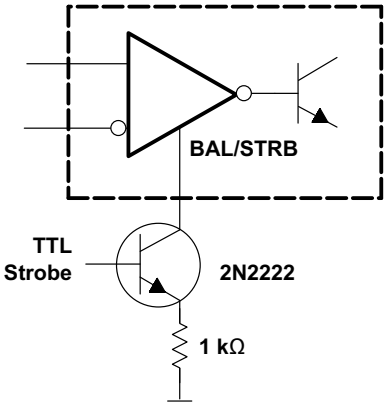

Copyright © 2016, Texas Instruments Incorporated

Do not connect strobe pin directly to ground, because the output is turned off whenever current is pulled from the strobe pin.

Figure 18. Strobing

System Examples (continued)

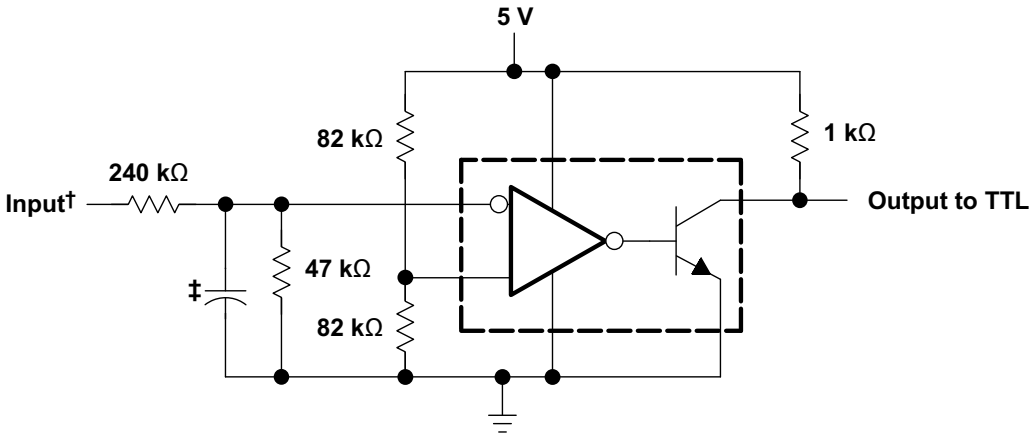

† Resistor values shown are for a 0- to 30-V logic swing and a 15-V threshold.
‡ May be added to control speed and reduce susceptibility to noise spikes

Copyright © 2016, Texas Instruments Incorporated

Figure 19. TTL Interface With High-Level Logic

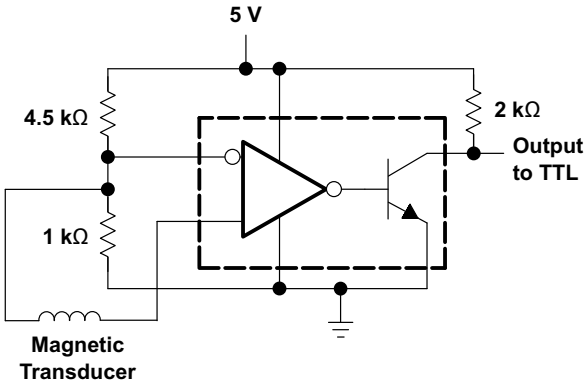

Copyright © 2016, Texas Instruments Incorporated

Figure 20. Detector for Magnetic Transducer

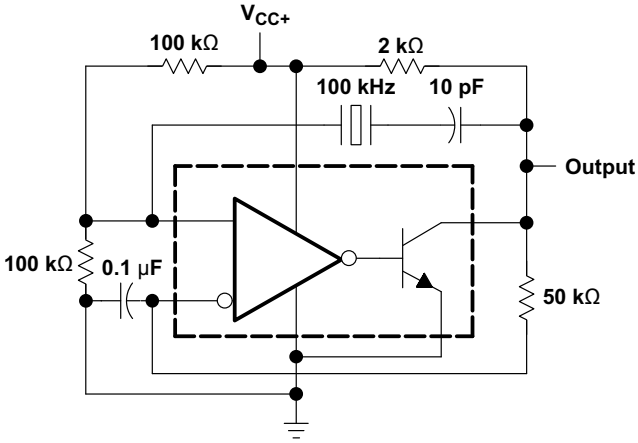

Copyright © 2016, Texas Instruments Incorporated

Figure 21. 100-kHz Crystal Oscillator

Copyright © 1973–2017, Texas Instruments Incorporated

System Examples (continued)

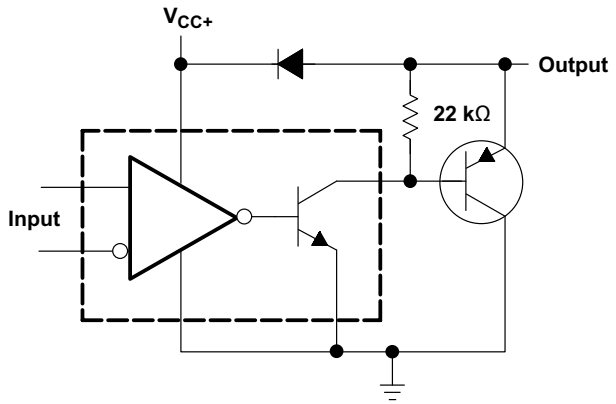

Copyright © 2016, Texas Instruments Incorporated

Figure 22. Comparator and Solenoid Driver

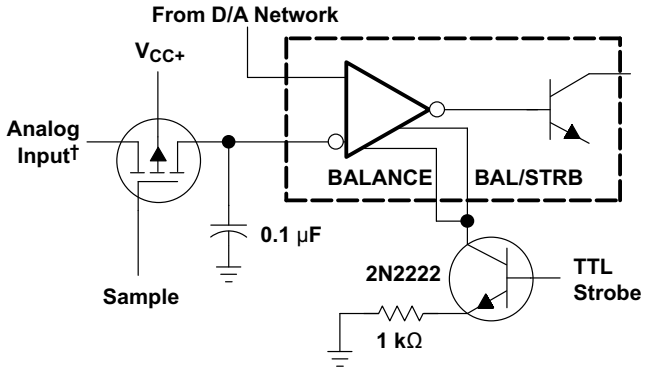

† Typical input current is 50 pA with inputs strobed off.

Copyright © 2016, Texas Instruments Incorporated

Figure 23. Strobing Both Input and Output Stages Simultaneously

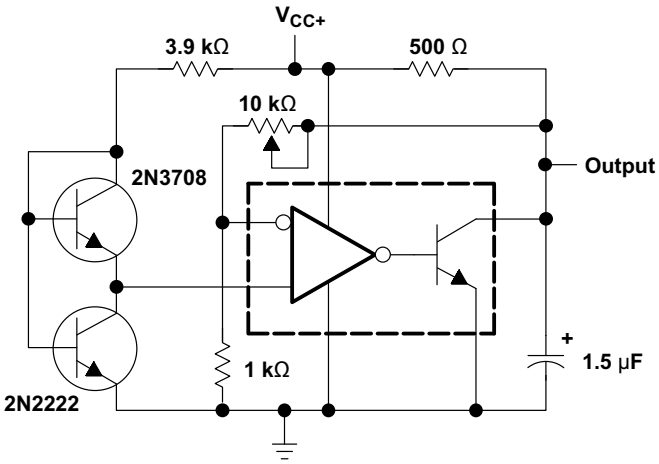

Copyright © 2016, Texas Instruments Incorporated

Figure 24. Low-Voltage Adjustable Reference Supply

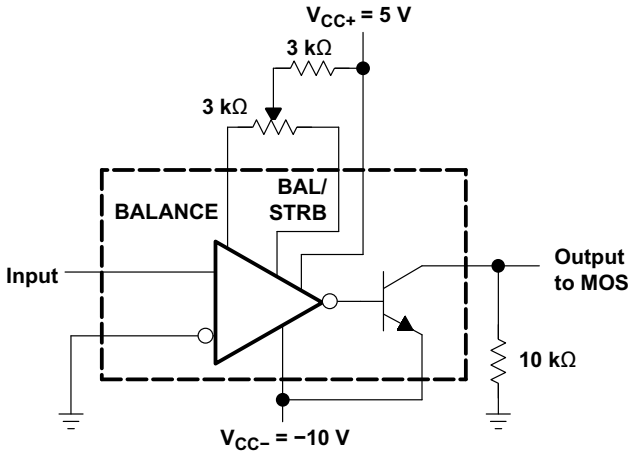

Copyright © 2016, Texas Instruments Incorporated

Figure 25. Zero-Crossing Detector Driving MOS Logic

System Examples (continued)

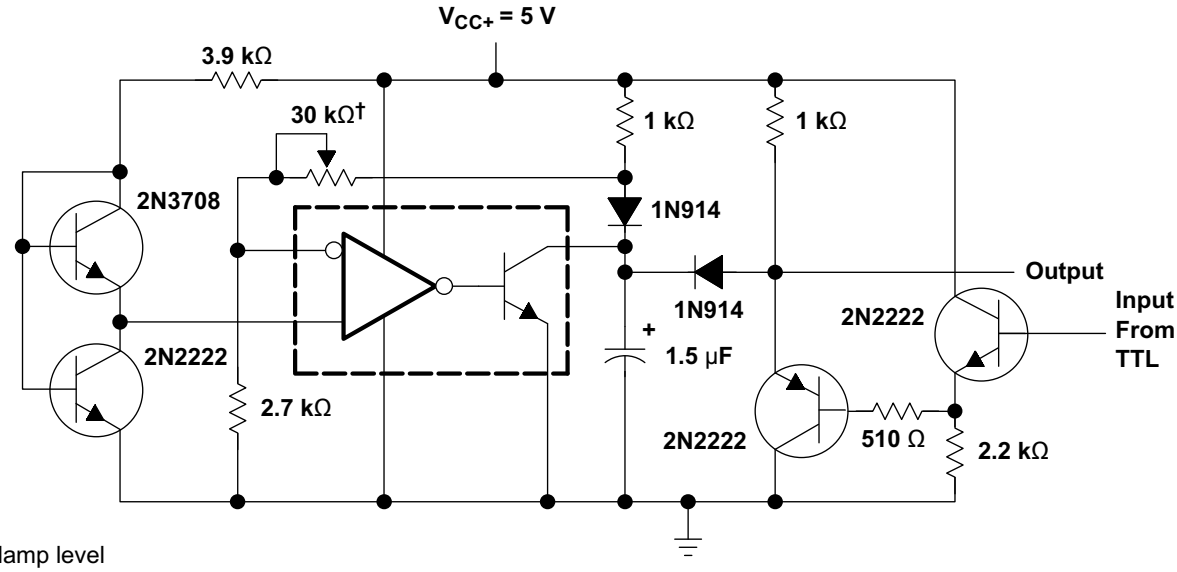

† Adjust to set clamp level

Copyright © 2016, Texas Instruments Incorporated

Figure 26. Precision Squarer

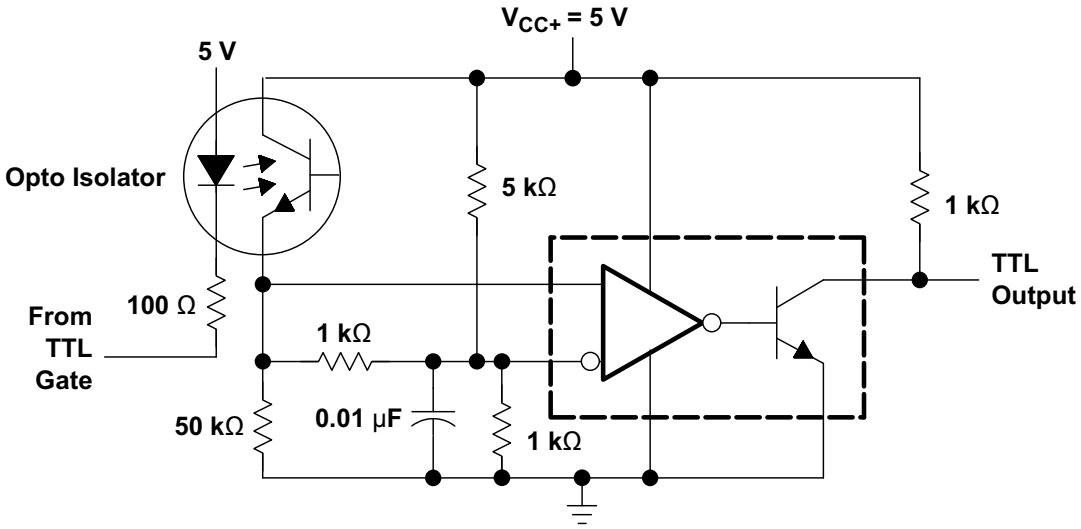

Copyright © 2016, Texas Instruments Incorporated

Figure 27. Digital Transmission Isolator

Copyright © 1973–2017, Texas Instruments Incorporated

System Examples (continued)

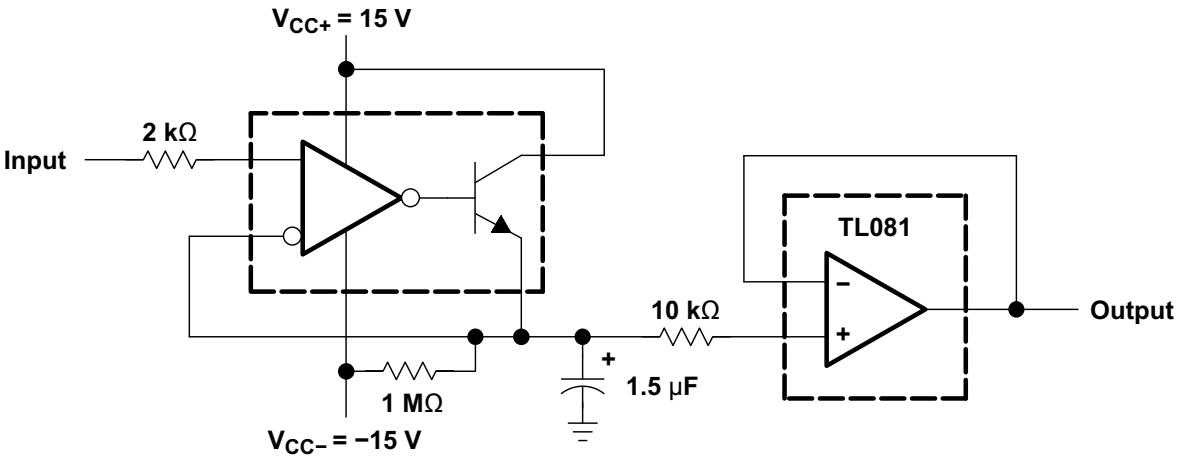

Copyright © 2016, Texas Instruments Incorporated

Figure 28. Positive-Peak Detector

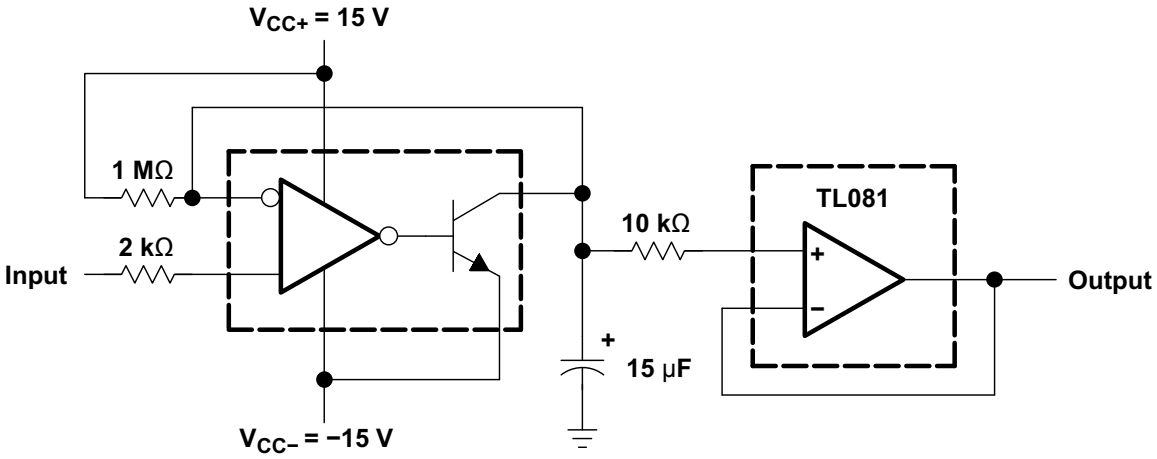

Copyright © 2016, Texas Instruments Incorporated

Figure 29. Negative-Peak Detector

System Examples (continued)

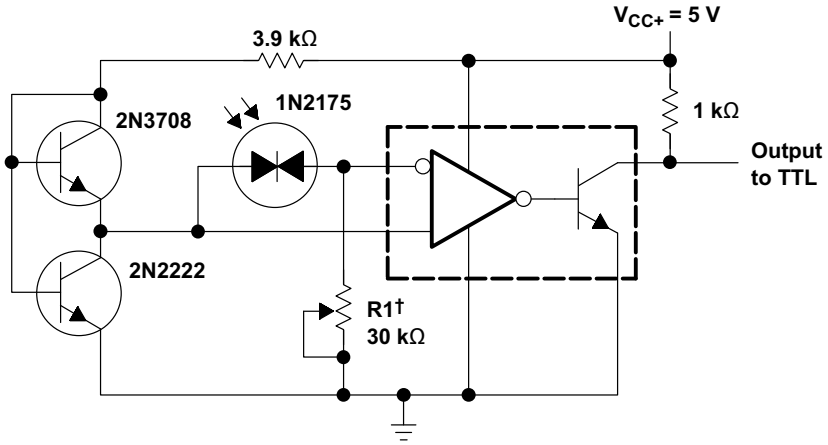

† R1 sets the comparison level. At comparison, the photodiode has less than 5 mV across it, decreasing dark current by an order of magnitude.

Copyright © 2016, Texas Instruments Incorporated

Figure 30. Precision Photodiode Comparator

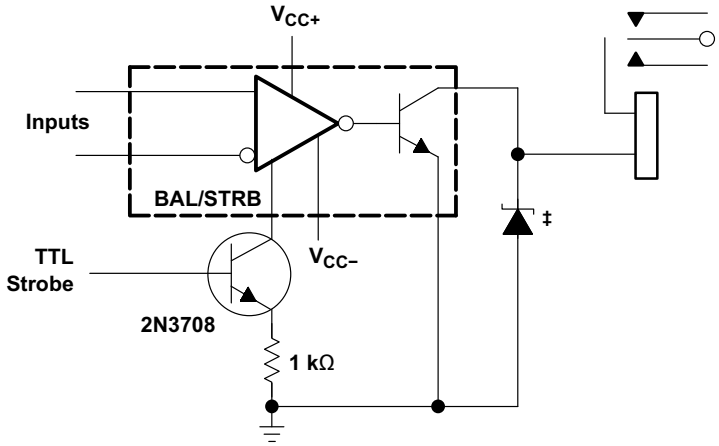

‡ Transient voltage and inductive kickback protection

Copyright © 2016, Texas Instruments Incorporated

Figure 31. Relay Driver With Strobe

Copyright © 1973–2017, Texas Instruments Incorporated

System Examples (continued)

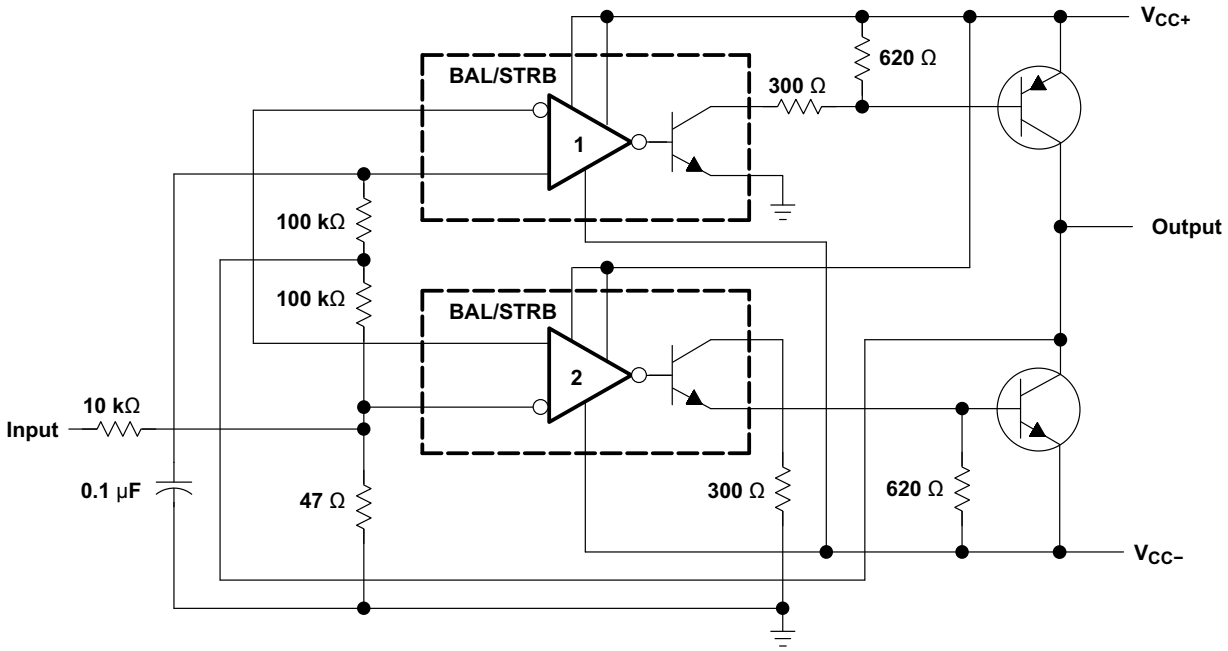

Copyright © 2016, Texas Instruments Incorporated

Figure 32. Switching Power Amplifier

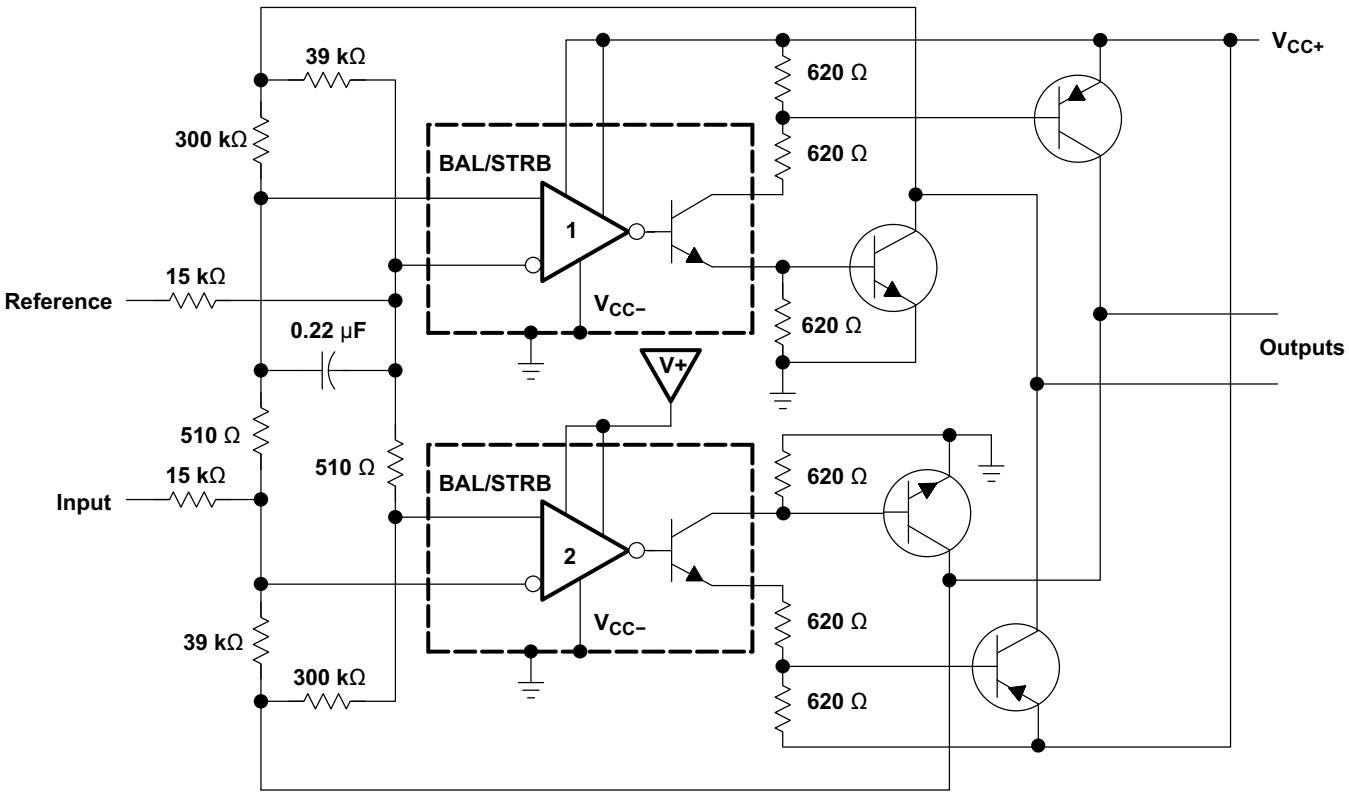

Copyright © 2016, Texas Instruments Incorporated

Figure 33. Switching Power Amplifiers

10 Power Supply Recommendations

For fast response and comparison applications with noisy or AC inputs, use a bypass capacitor on the supply pin to reject any variation on the supply voltage. This variation can affect the common-mode range of the comparator input and create an inaccurate comparison.

11 Layout

11.1 Layout Guidelines

To create an accurate comparator application without hysteresis, maintain a stable power supply with minimized noise and glitches, which can affect the high level input common-mode voltage range. To achieve this accuracy, add a bypass capacitor between the supply voltage and ground. Place a bypass capacitor on the positive power supply and negative supply (if available).

11.2 Layout Example

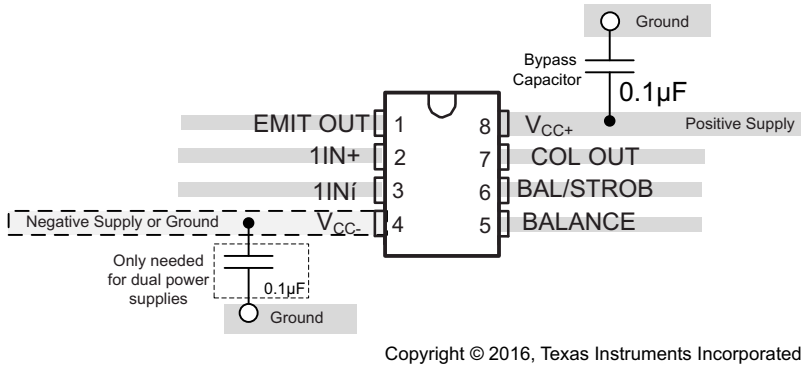

Figure 34. LMx11 Layout Example

Copyright © 1973–2017, Texas Instruments Incorporated

12 Device and Documentation Support

12.1 Related Links

The table below lists quick access links. Categories include technical documents, support and community resources, tools and software, and quick access to sample or buy.

Table 2. Related Links

PARTS	PRODUCT FOLDER	ORDER NOW	TECHNICAL DOCUMENTS	TOOLS & SOFTWARE	SUPPORT & COMMUNITY
LM111	Click here	Click here	Click here	Click here	Click here
LM211	Click here	Click here	Click here	Click here	Click here
LM311	Click here	Click here	Click here	Click here	Click here

12.2 Receiving Notification of Documentation Updates

To receive notification of documentation updates, navigate to the device product folder on ti.com. In the upper right corner, click on *Alert me* to register and receive a weekly digest of any product information that has changed. For change details, review the revision history included in any revised document.

12.3 Community Resources

The following links connect to TI community resources. Linked contents are provided "AS IS" by the respective contributors. They do not constitute TI specifications and do not necessarily reflect TI's views; see TI's Terms of Use.

TI E2E™ Online Community ***TI's Engineer-to-Engineer (E2E) Community.*** Created to foster collaboration among engineers. At e2e.ti.com, you can ask questions, share knowledge, explore ideas and help solve problems with fellow engineers.

Design Support ***TI's Design Support*** Quickly find helpful E2E forums along with design support tools and contact information for technical support.

12.4 Trademarks

E2E is a trademark of Texas Instruments.
All other trademarks are the property of their respective owners.

12.5 Electrostatic Discharge Caution

These devices have limited built-in ESD protection. The leads should be shorted together or the device placed in conductive foam during storage or handling to prevent electrostatic damage to the MOS gates.

12.6 Glossary

SLYZ022 — *TI Glossary*.

This glossary lists and explains terms, acronyms, and definitions.

13 Mechanical, Packaging, and Orderable Information

The following pages include mechanical packaging and orderable information. This information is the most current data available for the designated devices. This data is subject to change without notice and revision of this document. For browser based versions of this data sheet, refer to the left hand navigation.

PACKAGING INFORMATION

Orderable part number	Status (1)	Material type (2)	Package | Pins	Package qty | Carrier	RoHS (3)	Lead finish/ Ball material (4)	MSL rating/ Peak reflow (5)	Op temp (°C)	Part marking (6)
JM38510/10304BPA	Active	Production	CDIP (JG) | 8	50 | TUBE	No	SNPB	N/A for Pkg Type	-55 to 125	JM38510 /10304BPA
JM38510/10304BPA.A	Active	Production	CDIP (JG) | 8	50 | TUBE	No	SNPB	N/A for Pkg Type	-55 to 125	JM38510 /10304BPA
LM111FKB	Active	Production	LCCC (FK) | 20	55 | TUBE	No	SNPB	N/A for Pkg Type	-55 to 125	LM111FKB
LM111FKB.A	Active	Production	LCCC (FK) | 20	55 | TUBE	No	SNPB	N/A for Pkg Type	-55 to 125	LM111FKB
LM111JG	Active	Production	CDIP (JG) | 8	50 | TUBE	No	SNPB	N/A for Pkg Type	-55 to 125	LM111JG
LM111JG.A	Active	Production	CDIP (JG) | 8	50 | TUBE	No	SNPB	N/A for Pkg Type	-55 to 125	LM111JG
LM111JGB	Active	Production	CDIP (JG) | 8	50 | TUBE	No	SNPB	N/A for Pkg Type	-55 to 125	LM111JGB
LM111JGB.A	Active	Production	CDIP (JG) | 8	50 | TUBE	No	SNPB	N/A for Pkg Type	-55 to 125	LM111JGB
LM211D	Active	Production	SOIC (D) | 8	75 | TUBE	Yes	NIPDAU	Level-1-260C-UNLIM	-40 to 85	LM211
LM211D.A	Active	Production	SOIC (D) | 8	75 | TUBE	Yes	NIPDAU	Level-1-260C-UNLIM	-40 to 85	LM211
LM211DR	Active	Production	SOIC (D) | 8	2500 | LARGE T&R	Yes	NIPDAU	Level-1-260C-UNLIM	-40 to 85	LM211
LM211DR.A	Active	Production	SOIC (D) | 8	2500 | LARGE T&R	Yes	NIPDAU	Level-1-260C-UNLIM	-40 to 85	LM211
LM211DRG4	Active	Production	SOIC (D) | 8	2500 | LARGE T&R	Yes	NIPDAU	Level-1-260C-UNLIM	-40 to 85	LM211
LM211DRG4.A	Active	Production	SOIC (D) | 8	2500 | LARGE T&R	Yes	NIPDAU	Level-1-260C-UNLIM	-40 to 85	LM211
LM211P	Active	Production	PDIP (P) | 8	50 | TUBE	Yes	NIPDAU	N/A for Pkg Type	-40 to 85	LM211P
LM211P.A	Active	Production	PDIP (P) | 8	50 | TUBE	Yes	NIPDAU	N/A for Pkg Type	-40 to 85	LM211P
LM211PE4	Active	Production	PDIP (P) | 8	50 | TUBE	-	Call TI	Call TI	-40 to 85	
LM211PW	Active	Production	TSSOP (PW) | 8	150 | TUBE	Yes	NIPDAU	Level-1-260C-UNLIM	-40 to 85	L211
LM211PW.A	Active	Production	TSSOP (PW) | 8	150 | TUBE	Yes	NIPDAU	Level-1-260C-UNLIM	-40 to 85	L211
LM211PWR	Active	Production	TSSOP (PW) | 8	2000 | LARGE T&R	Yes	NIPDAU	Level-1-260C-UNLIM	-40 to 85	L211
LM211PWR.A	Active	Production	TSSOP (PW) | 8	2000 | LARGE T&R	Yes	NIPDAU	Level-1-260C-UNLIM	-40 to 85	L211
LM211PWRE4	Active	Production	TSSOP (PW) | 8	2000 | LARGE T&R	-	Call TI	Call TI	-40 to 85	
LM211QD	Active	Production	SOIC (D) | 8	75 | TUBE	Yes	NIPDAU	Level-1-260C-UNLIM	-40 to 125	LM211Q
LM211QD.A	Active	Production	SOIC (D) | 8	75 | TUBE	Yes	NIPDAU	Level-1-260C-UNLIM	-40 to 125	LM211Q
LM211QDG4	Obsolete	Production	SOIC (D) | 8	-	-	Call TI	Call TI	-40 to 125	LM211Q
LM211QDR	Active	Production	SOIC (D) | 8	2500 | LARGE T&R	Yes	NIPDAU	Level-1-260C-UNLIM	-40 to 125	LM211Q
LM211QDR.A	Active	Production	SOIC (D) | 8	2500 | LARGE T&R	Yes	NIPDAU	Level-1-260C-UNLIM	-40 to 125	LM211Q
LM211QDRG4	Active	Production	SOIC (D) | 8	2500 | LARGE T&R	Yes	NIPDAU	Level-1-260C-UNLIM	-40 to 125	LM211Q

Orderable part number	Status (1)	Material type (2)	Package | Pins	Package qty | Carrier	RoHS (3)	Lead finish/ Ball material (4)	MSL rating/ Peak reflow (5)	Op temp (°C)	Part marking (6)
LM211QDRG4.A	Active	Production	SOIC (D) | 8	2500 | LARGE T&R	Yes	NIPDAU	Level-1-260C-UNLIM	-40 to 125	LM211Q
LM311D	Active	Production	SOIC (D) | 8	75 | TUBE	Yes	NIPDAU	Level-1-260C-UNLIM	0 to 70	LM311
LM311D.A	Active	Production	SOIC (D) | 8	75 | TUBE	Yes	NIPDAU	Level-1-260C-UNLIM	0 to 70	LM311
LM311DR	Active	Production	SOIC (D) | 8	2500 | LARGE T&R	Yes	NIPDAU	Level-1-260C-UNLIM	0 to 70	LM311
LM311DR.A	Active	Production	SOIC (D) | 8	2500 | LARGE T&R	Yes	NIPDAU	Level-1-260C-UNLIM	0 to 70	LM311
LM311DRG4	Obsolete	Production	SOIC (D) | 8	-	-	Call TI	Call TI	0 to 70	LM311
LM311P	Active	Production	PDIP (P) | 8	50 | TUBE	Yes	NIPDAU	N/A for Pkg Type	0 to 70	LM311P
LM311P.A	Active	Production	PDIP (P) | 8	50 | TUBE	Yes	NIPDAU	N/A for Pkg Type	0 to 70	LM311P
LM311PE4	Active	Production	PDIP (P) | 8	50 | TUBE	-	Call TI	Call TI	0 to 70	
LM311PSR	Active	Production	SO (PS) | 8	2000 | LARGE T&R	Yes	NIPDAU	Level-1-260C-UNLIM	0 to 70	L311
LM311PSR.A	Active	Production	SO (PS) | 8	2000 | LARGE T&R	Yes	NIPDAU	Level-1-260C-UNLIM	0 to 70	L311
LM311PW	Active	Production	TSSOP (PW) | 8	150 | TUBE	Yes	NIPDAU	Level-1-260C-UNLIM	0 to 70	L311
LM311PW.A	Active	Production	TSSOP (PW) | 8	150 | TUBE	Yes	NIPDAU	Level-1-260C-UNLIM	0 to 70	L311
LM311PWG4	Active	Production	TSSOP (PW) | 8	150 | TUBE	-	Call TI	Call TI	0 to 70	
LM311PWR	Active	Production	TSSOP (PW) | 8	2000 | LARGE T&R	Yes	NIPDAU	Level-1-260C-UNLIM	0 to 70	L311
LM311PWR.A	Active	Production	TSSOP (PW) | 8	2000 | LARGE T&R	Yes	NIPDAU	Level-1-260C-UNLIM	0 to 70	L311
LM311PWRG4	Active	Production	TSSOP (PW) | 8	2000 | LARGE T&R	-	Call TI	Call TI	0 to 70	
M38510/10304BPA	Active	Production	CDIP (JG) | 8	50 | TUBE	No	SNPB	N/A for Pkg Type	-55 to 125	JM38510 /10304BPA

(1) **Status:** For more details on status, see our product life cycle.

(2) **Material type:** When designated, preproduction parts are prototypes/experimental devices, and are not yet approved or released for full production. Testing and final process, including without limitation quality assurance, reliability performance testing, and/or process qualification, may not yet be complete, and this item is subject to further changes or possible discontinuation. If available for ordering, purchases will be subject to an additional waiver at checkout, and are intended for early internal evaluation purposes only. These items are sold without warranties of any kind.

(3) **RoHS values:** Yes, No, RoHS Exempt. See the TI RoHS Statement for additional information and value definition.

(4) **Lead finish/Ball material:** Parts may have multiple material finish options. Finish options are separated by a vertical ruled line. Lead finish/Ball material values may wrap to two lines if the finish value exceeds the maximum column width.

(5) **MSL rating/Peak reflow:** The moisture sensitivity level ratings and peak solder (reflow) temperatures. In the event that a part has multiple moisture sensitivity ratings, only the lowest level per JEDEC standards is shown. Refer to the shipping label for the actual reflow temperature that will be used to mount the part to the printed circuit board.

(6) **Part marking:** There may be an additional marking, which relates to the logo, the lot trace code information, or the environmental category of the part.

Multiple part markings will be inside parentheses. Only one part marking contained in parentheses and separated by a "~" will appear on a part. If a line is indented then it is a continuation of the previous line and the two combined represent the entire part marking for that device.

Important Information and Disclaimer: The information provided on this page represents TI's knowledge and belief as of the date that it is provided. TI bases its knowledge and belief on information provided by third parties, and makes no representation or warranty as to the accuracy of such information. Efforts are underway to better integrate information from third parties. TI has taken and continues to take reasonable steps to provide representative and accurate information but may not have conducted destructive testing or chemical analysis on incoming materials and chemicals. TI and TI suppliers consider certain information to be proprietary, and thus CAS numbers and other limited information may not be available for release.

In no event shall TI's liability arising out of such information exceed the total purchase price of the TI part(s) at issue in this document sold by TI to Customer on an annual basis.

OTHER QUALIFIED VERSIONS OF LM211 :

- Automotive : LM211-Q1
- Enhanced Product : LM211-EP

NOTE: Qualified Version Definitions:

- Automotive - Q100 devices qualified for high-reliability automotive applications targeting zero defects
- Enhanced Product - Supports Defense, Aerospace and Medical Applications

TAPE AND REEL INFORMATION

REEL DIMENSIONS

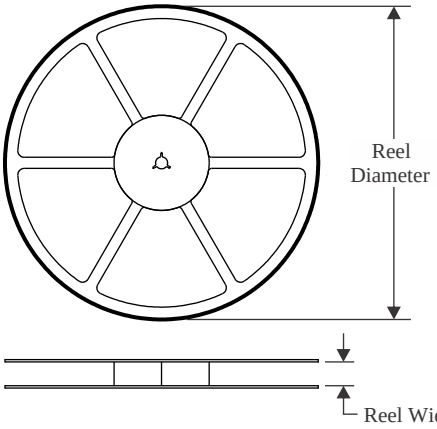

TAPE DIMENSIONS

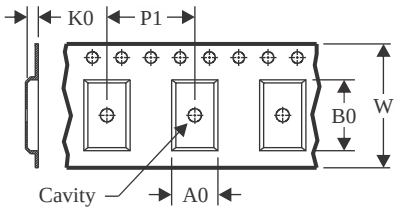

A0	Dimension designed to accommodate the component width
B0	Dimension designed to accommodate the component length
K0	Dimension designed to accommodate the component thickness
W	Overall width of the carrier tape
P1	Pitch between successive cavity centers

QUADRANT ASSIGNMENTS FOR PIN 1 ORIENTATION IN TAPE

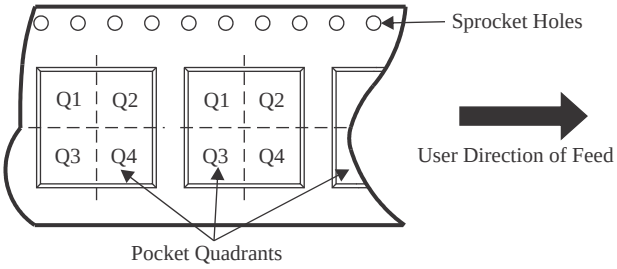

*All dimensions are nominal

Device	Package Type	Package Drawing	Pins	SPQ	Reel Diameter (mm)	Reel Width W1 (mm)	A0 (mm)	B0 (mm)	K0 (mm)	P1 (mm)	W (mm)	Pin1 Quadrant
LM211DR	SOIC	D	8	2500	330.0	12.4	6.4	5.2	2.1	8.0	12.0	Q1
LM211DRG4	SOIC	D	8	2500	330.0	12.4	6.4	5.2	2.1	8.0	12.0	Q1
LM211DRG4	SOIC	D	8	2500	330.0	12.4	6.4	5.2	2.1	8.0	12.0	Q1
LM211PWR	TSSOP	PW	8	2000	330.0	12.4	7.0	3.6	1.6	8.0	12.0	Q1
LM211QDR	SOIC	D	8	2500	330.0	12.5	6.4	5.2	2.1	8.0	12.0	Q1
LM311DR	SOIC	D	8	2500	330.0	12.4	6.4	5.2	2.1	8.0	12.0	Q1
LM311PSR	SO	PS	8	2000	330.0	16.4	8.35	6.6	2.4	12.0	16.0	Q1
LM311PWR	TSSOP	PW	8	2000	330.0	12.4	7.0	3.6	1.6	8.0	12.0	Q1

TAPE AND REEL BOX DIMENSIONS

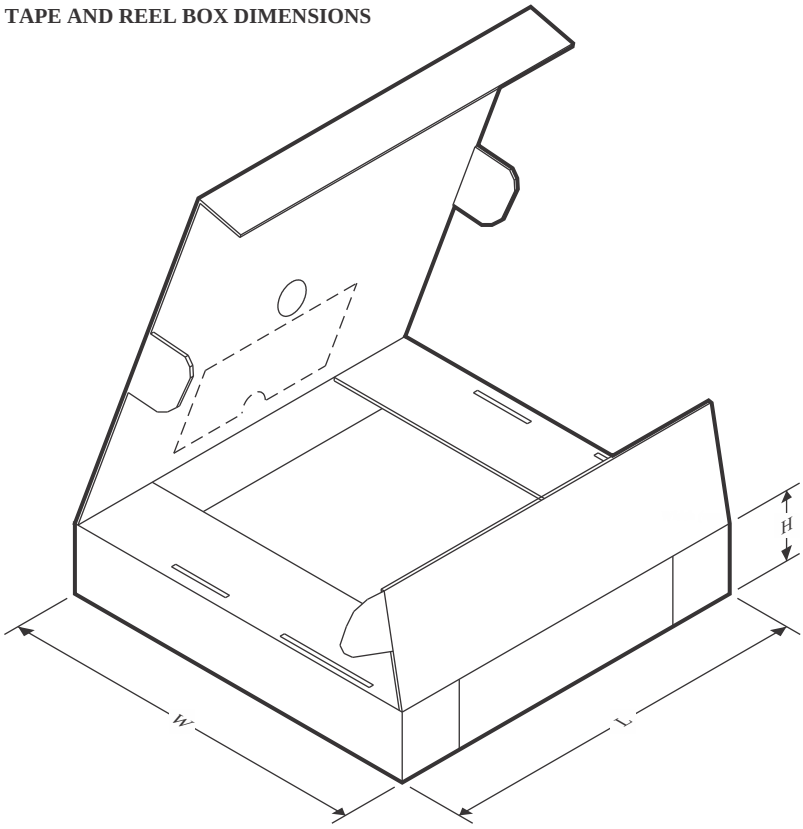

*All dimensions are nominal

Device	Package Type	Package Drawing	Pins	SPQ	Length (mm)	Width (mm)	Height (mm)
LM211DR	SOIC	D	8	2500	353.0	353.0	32.0
LM211DRG4	SOIC	D	8	2500	340.5	338.1	20.6
LM211DRG4	SOIC	D	8	2500	353.0	353.0	32.0
LM211PWR	TSSOP	PW	8	2000	353.0	353.0	32.0
LM211QDR	SOIC	D	8	2500	353.0	353.0	32.0
LM311DR	SOIC	D	8	2500	353.0	353.0	32.0
LM311PSR	SO	PS	8	2000	353.0	353.0	32.0
LM311PWR	TSSOP	PW	8	2000	353.0	353.0	32.0

TUBE

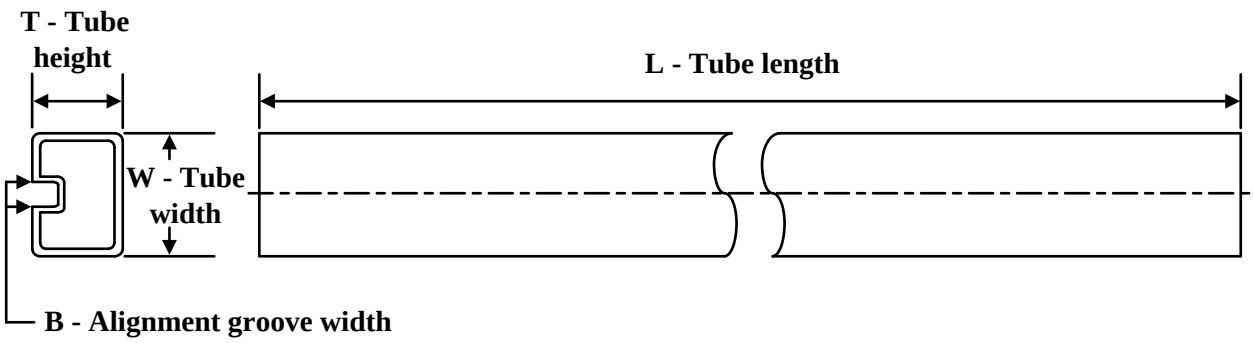

*All dimensions are nominal

Device	Package Name	Package Type	Pins	SPQ	L (mm)	W (mm)	T (µm)	B (mm)
LM111FKB	FK	LCCC	20	55	506.98	12.06	2030	NA
LM111FKB.A	FK	LCCC	20	55	506.98	12.06	2030	NA
LM211D	D	SOIC	8	75	507	8	3940	4.32
LM211D	D	SOIC	8	75	506.6	8	3940	4.32
LM211D.A	D	SOIC	8	75	507	8	3940	4.32
LM211D.A	D	SOIC	8	75	506.6	8	3940	4.32
LM211P	P	PDIP	8	50	506	13.97	11230	4.32
LM211P.A	P	PDIP	8	50	506	13.97	11230	4.32
LM211PW	PW	TSSOP	8	150	530	10.2	3600	3.5
LM211PW.A	PW	TSSOP	8	150	530	10.2	3600	3.5
LM211QD	D	SOIC	8	75	507	8	3940	4.32
LM211QD.A	D	SOIC	8	75	507	8	3940	4.32
LM311D	D	SOIC	8	75	507	8	3940	4.32
LM311D	D	SOIC	8	75	506.6	8	3940	4.32
LM311D.A	D	SOIC	8	75	506.6	8	3940	4.32
LM311D.A	D	SOIC	8	75	507	8	3940	4.32
LM311P	P	PDIP	8	50	506	13.97	11230	4.32
LM311P.A	P	PDIP	8	50	506	13.97	11230	4.32
LM311PW	PW	TSSOP	8	150	530	10.2	3600	3.5
LM311PW.A	PW	TSSOP	8	150	530	10.2	3600	3.5

GENERIC PACKAGE VIEW

FK 20

LCCC - 2.03 mm max height

8.89 x 8.89, 1.27 mm pitch

LEADLESS CERAMIC CHIP CARRIER

This image is a representation of the package family, actual package may vary.
Refer to the product data sheet for package details.

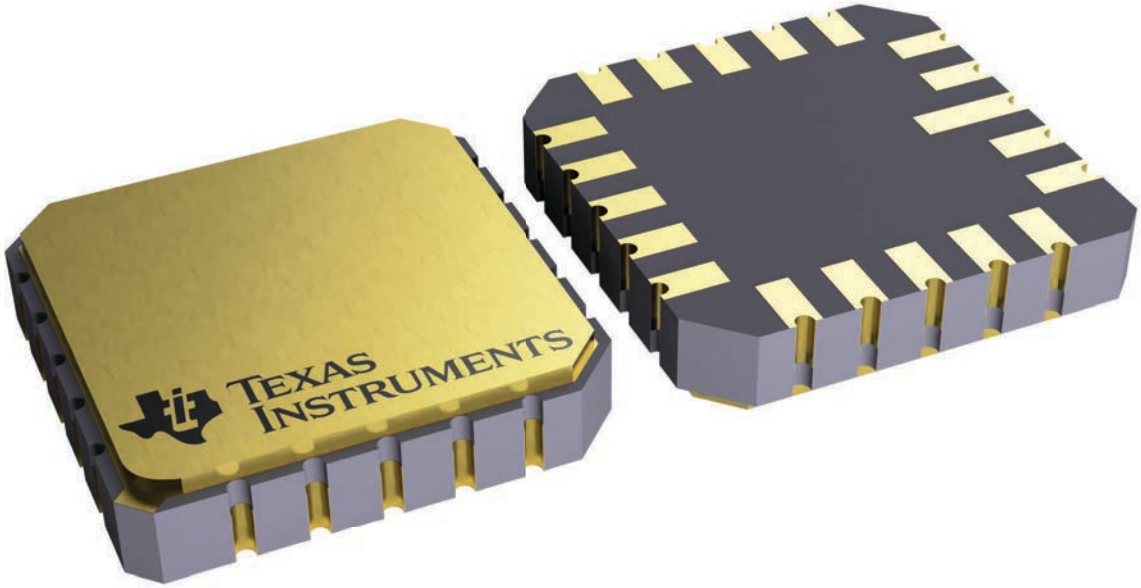

4229370VA\

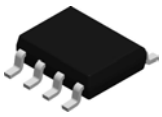

PACKAGE OUTLINE

D0008A

SOIC - 1.75 mm max height

SMALL OUTLINE INTEGRATED CIRCUIT

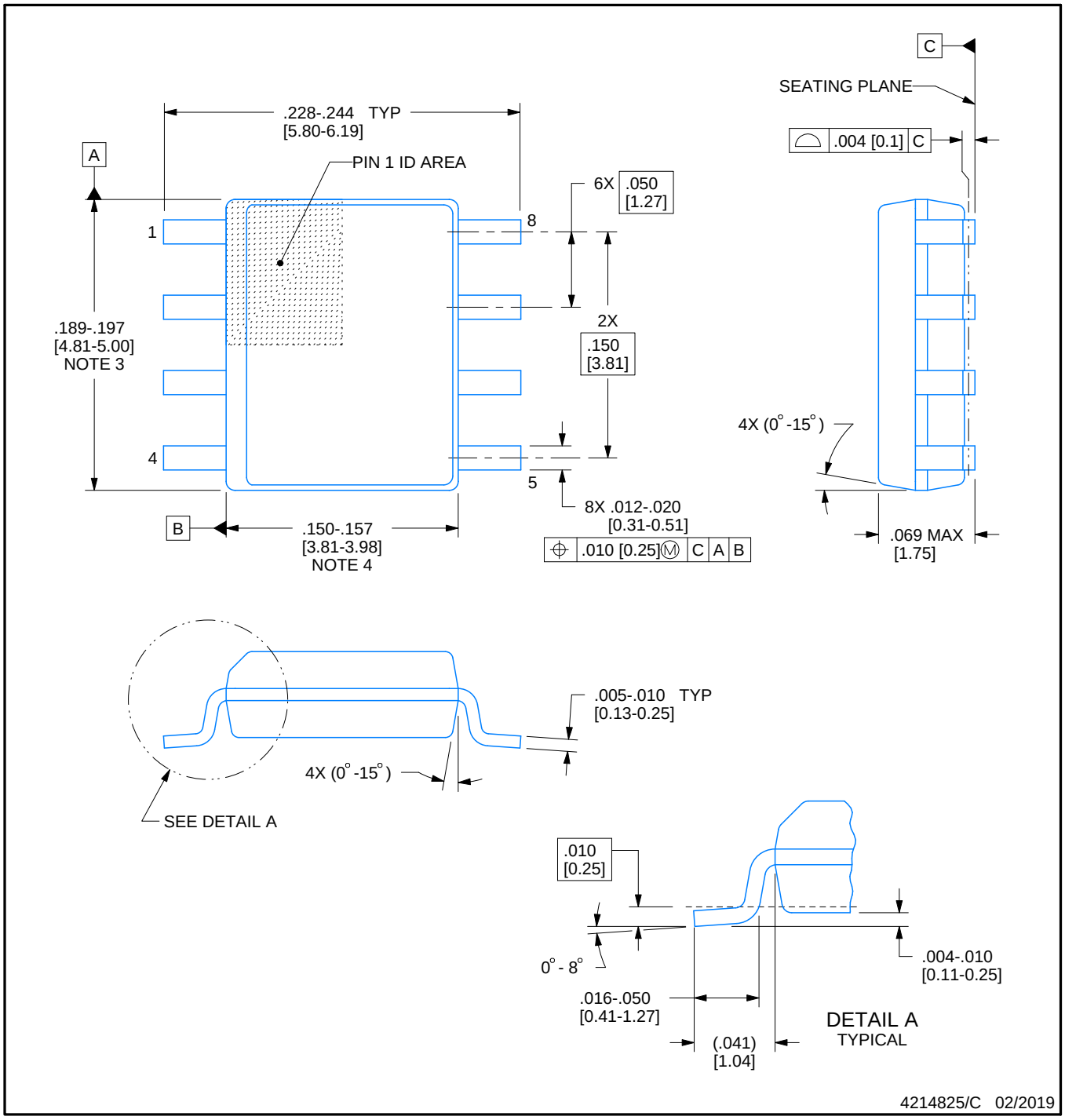

NOTES:

1. Linear dimensions are in inches [millimeters]. Dimensions in parenthesis are for reference only. Controlling dimensions are in inches. Dimensioning and tolerancing per ASME Y14.5M.
2. This drawing is subject to change without notice.
3. This dimension does not include mold flash, protrusions, or gate burrs. Mold flash, protrusions, or gate burrs shall not exceed .006 [0.15] per side.
4. This dimension does not include interlead flash.
5. Reference JEDEC registration MS-012, variation AA.

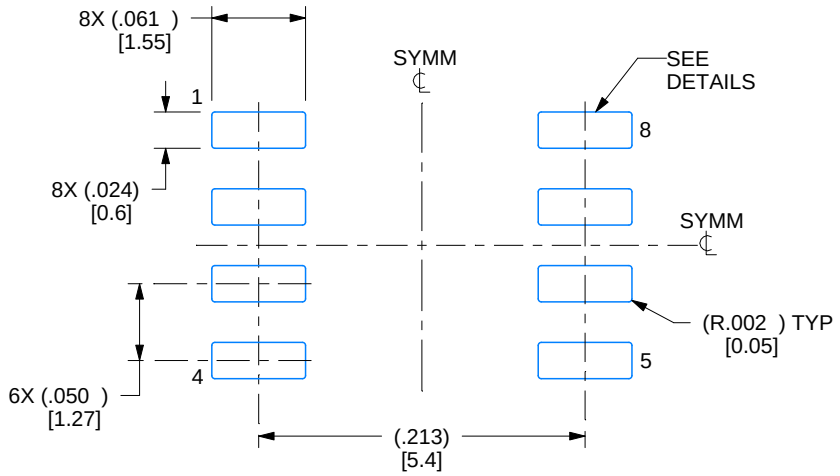

LAND PATTERN EXAMPLE
EXPOSED METAL SHOWN
SCALE:8X

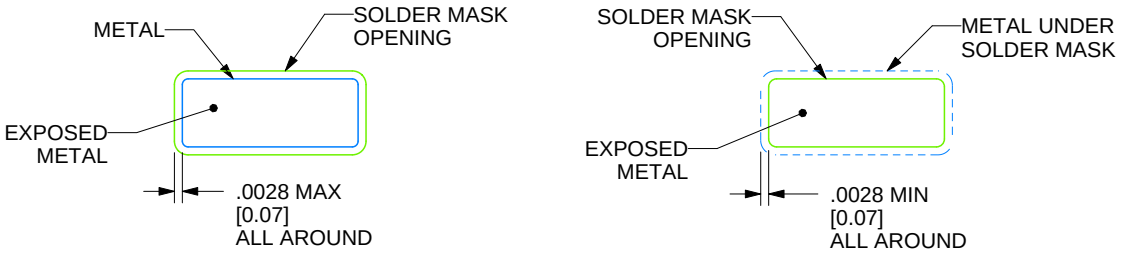

SOLDER MASK DETAILS

4214825/C 02/2019

NOTES: (continued)

6. Publication IPC-7351 may have alternate designs.
7. Solder mask tolerances between and around signal pads can vary based on board fabrication site.

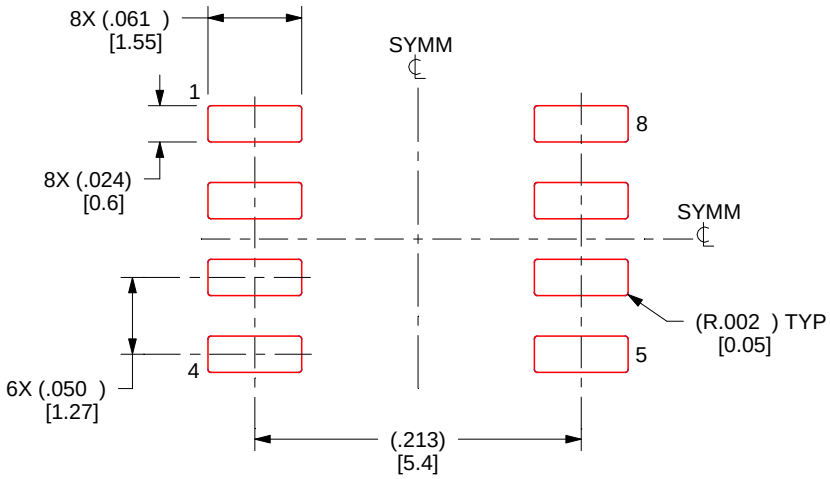

SOLDER PASTE EXAMPLE
BASED ON .005 INCH [0.125 MM] THICK STENCIL
SCALE:8X

4214825/C 02/2019

NOTES: (continued)

8. Laser cutting apertures with trapezoidal walls and rounded corners may offer better paste release. IPC-7525 may have alternate design recommendations.
9. Board assembly site may have different recommendations for stencil design.

MECHANICAL DATA

PS (R-PDSO-G8) **PLASTIC SMALL-OUTLINE PACKAGE**

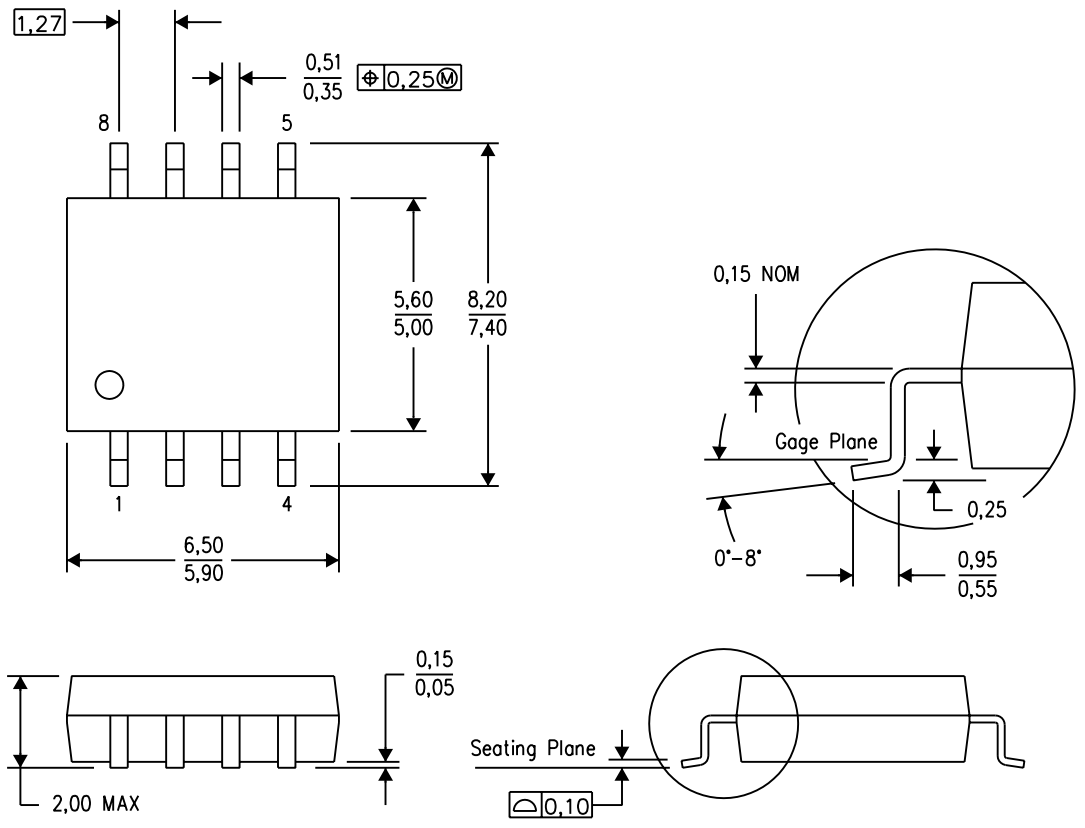

NOTES:
A. All linear dimensions are in millimeters.
B. This drawing is subject to change without notice.
C. Body dimensions do not include mold flash or protrusion, not to exceed 0,15.

PS (R-PDSO-G8) PLASTIC SMALL OUTLINE

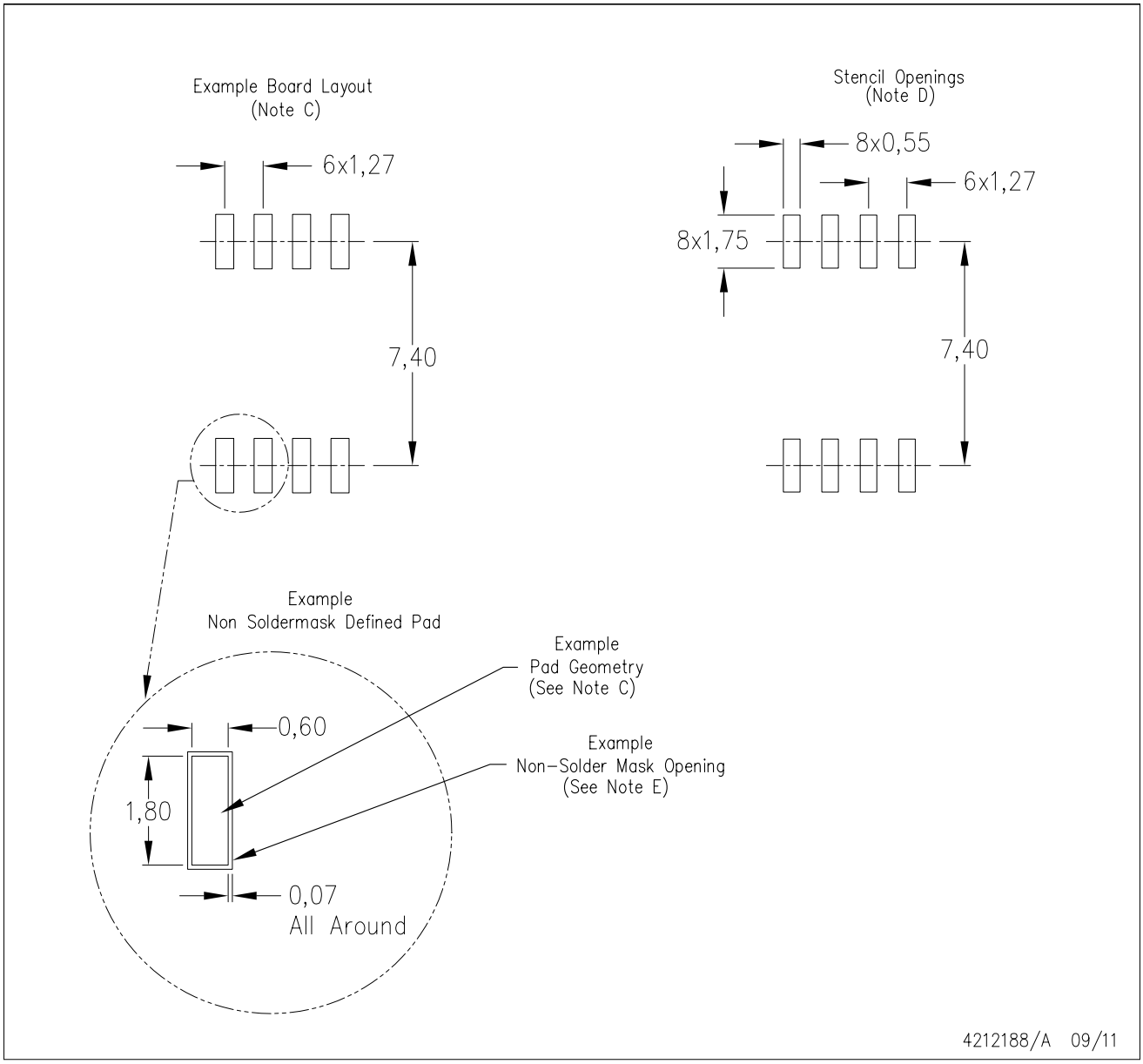

NOTES:
A. All linear dimensions are in millimeters.
B. This drawing is subject to change without notice.
C. Publication IPC-7351 is recommended for alternate designs.
D. Laser cutting apertures with trapezoidal walls and also rounding corners will offer better paste release. Customers should contact their board assembly site for stencil design recommendations. Refer to IPC-7525 for other stencil recommendations.
E. Customers should contact their board fabrication site for solder mask tolerances between and around signal pads.

P (R–PDIP–T8) PLASTIC DUAL–IN–LINE PACKAGE

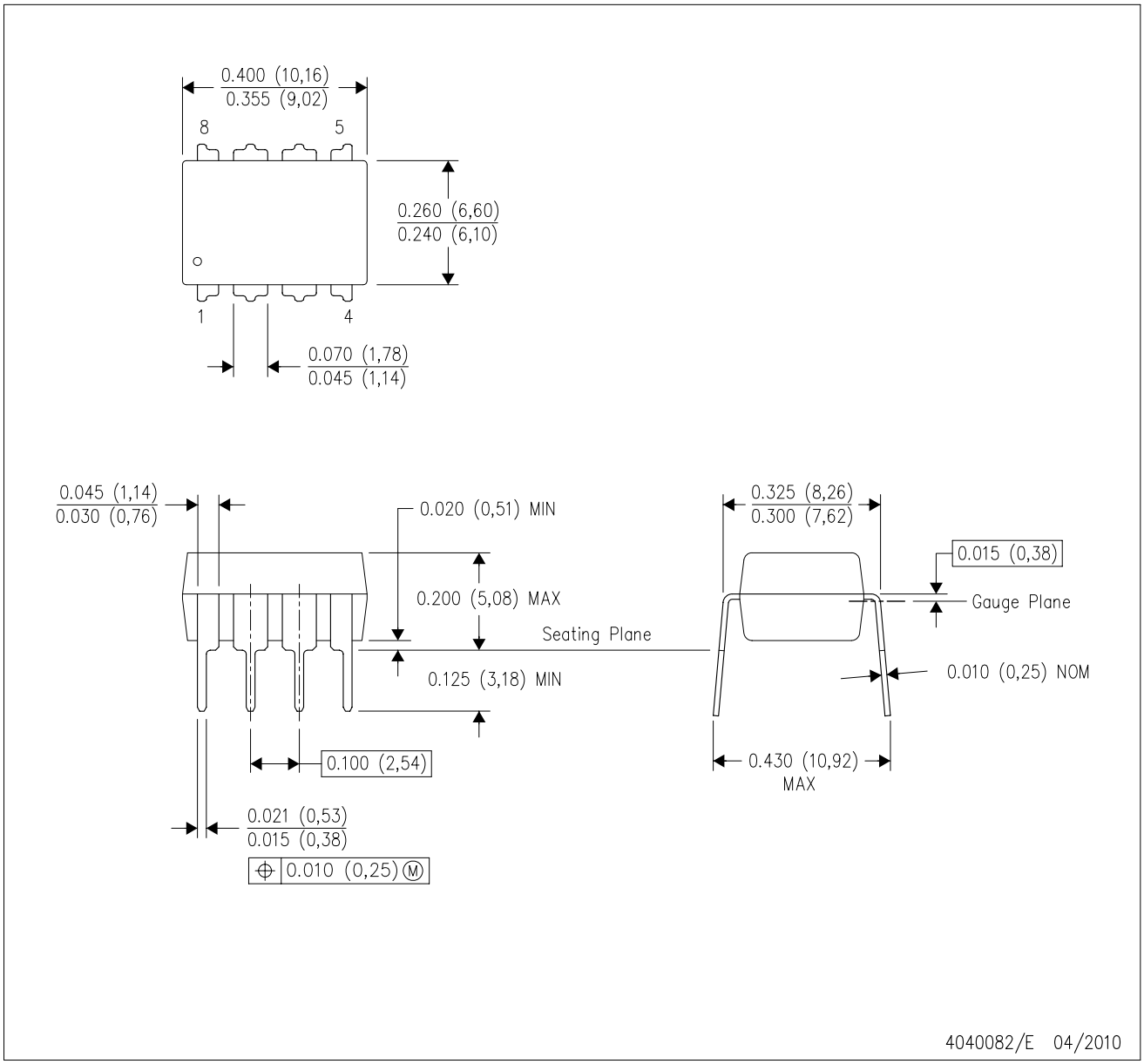

NOTES:
A. All linear dimensions are in inches (millimeters).
B. This drawing is subject to change without notice.
C. Falls within JEDEC MS–001 variation BA.

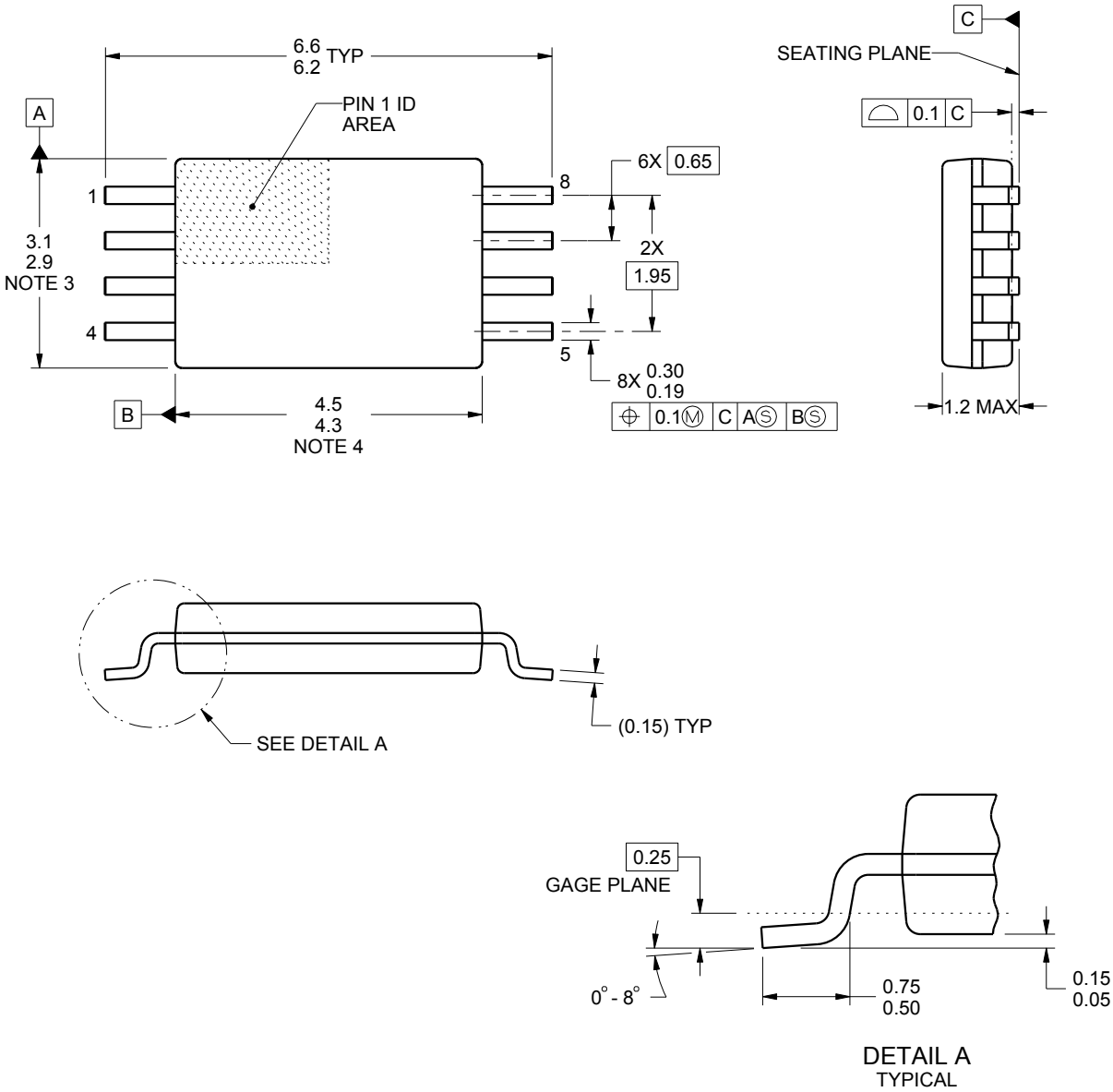

NOTES:

1. All linear dimensions are in millimeters. Any dimensions in parenthesis are for reference only. Dimensioning and tolerancing per ASME Y14.5M.
2. This drawing is subject to change without notice.
3. This dimension does not include mold flash, protrusions, or gate burrs. Mold flash, protrusions, or gate burrs shall not exceed 0.15 mm per side.
4. This dimension does not include interlead flash. Interlead flash shall not exceed 0.25 mm per side.
5. Reference JEDEC registration MO-153, variation AA.

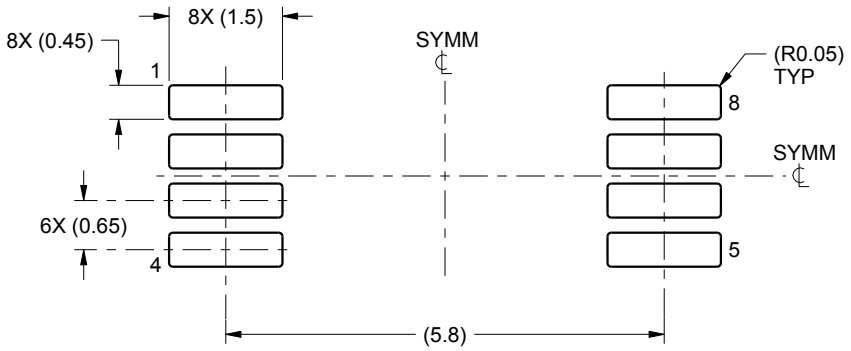

LAND PATTERN EXAMPLE
SCALE:10X

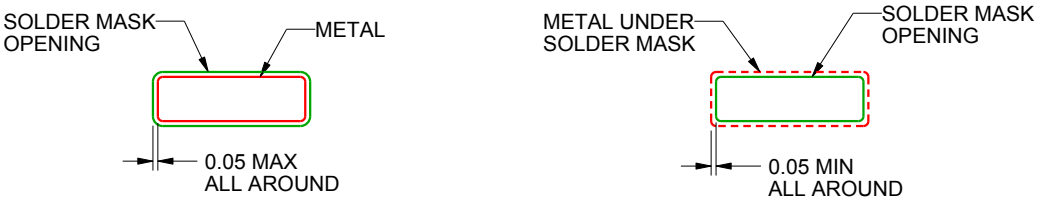

NON SOLDER MASK
DEFINED

SOLDER MASK
DEFINED

SOLDER MASK DETAILS
NOT TO SCALE

4221848/A 02/2015

NOTES: (continued)

6. Publication IPC-7351 may have alternate designs.
7. Solder mask tolerances between and around signal pads can vary based on board fabrication site.

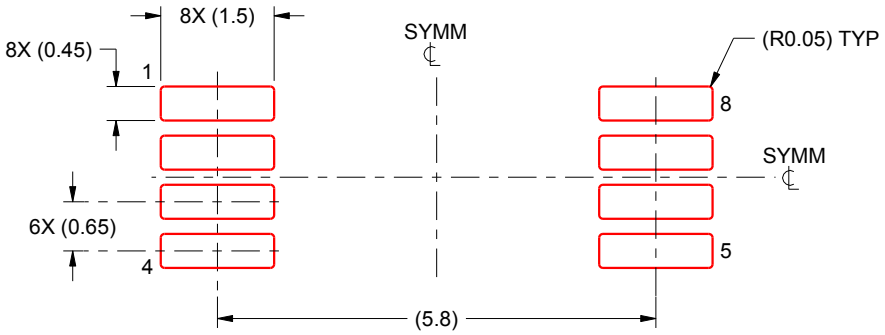

SOLDER PASTE EXAMPLE
BASED ON 0.125 mm THICK STENCIL
SCALE:10X

4221848/A 02/2015

NOTES: (continued)

8. Laser cutting apertures with trapezoidal walls and rounded corners may offer better paste release. IPC-7525 may have alternate design recommendations.
9. Board assembly site may have different recommendations for stencil design.

JG0008A

CDIP - 5.08 mm max height

CERAMIC DUAL IN-LINE PACKAGE

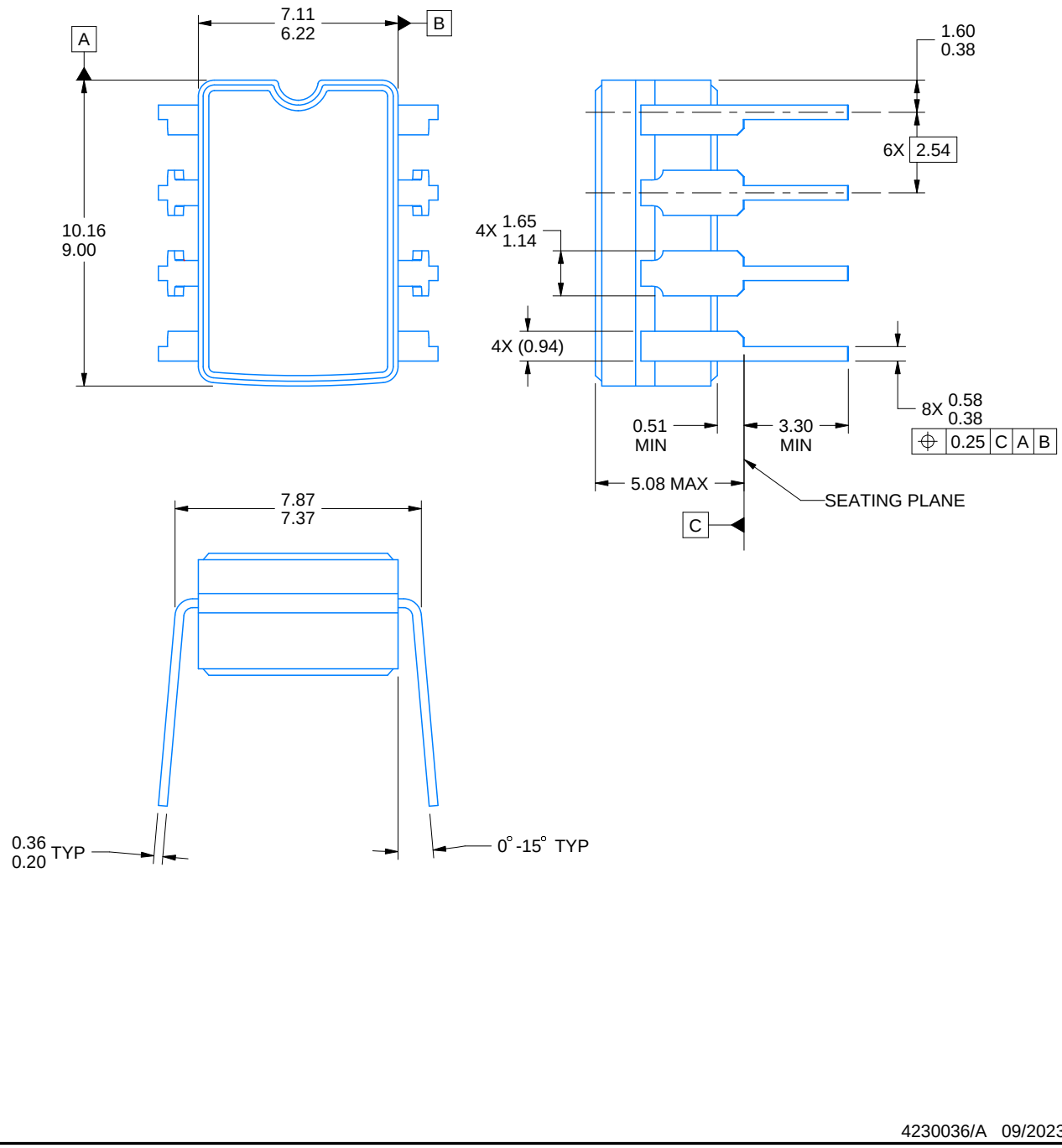

4230036/A 09/2023

NOTES:

1. All linear dimensions are in millimeters. Any dimensions in parenthesis are for reference only. Dimensioning and tolerancing per ASME Y14.5M.
2. This drawing is subject to change without notice.
3. This package can be hermetically sealed with a ceramic lid using glass frit.
4. Index point is provided on cap for terminal identification.
5. Falls within MIL STD 1835 GDIP1-T8

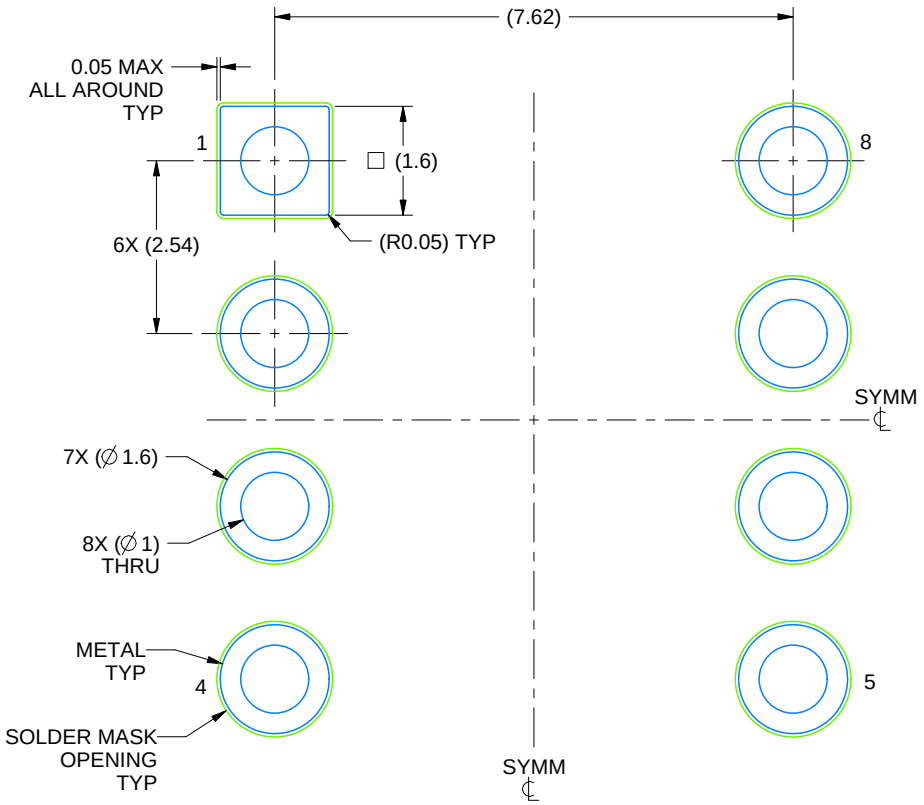

LAND PATTERN EXAMPLE
NON SOLDER MASK DEFINED
SCALE: 9X

4230036/A 09/2023

IMPORTANT NOTICE AND DISCLAIMER

TI PROVIDES TECHNICAL AND RELIABILITY DATA (INCLUDING DATASHEETS), DESIGN RESOURCES (INCLUDING REFERENCE DESIGNS), APPLICATION OR OTHER DESIGN ADVICE, WEB TOOLS, SAFETY INFORMATION, AND OTHER RESOURCES “AS IS” AND WITH ALL FAULTS, AND DISCLAIMS ALL WARRANTIES, EXPRESS AND IMPLIED, INCLUDING WITHOUT LIMITATION ANY IMPLIED WARRANTIES OF MERCHANTABILITY, FITNESS FOR A PARTICULAR PURPOSE OR NON-INFRINGEMENT OF THIRD PARTY INTELLECTUAL PROPERTY RIGHTS.

These resources are intended for skilled developers designing with TI products. You are solely responsible for (1) selecting the appropriate TI products for your application, (2) designing, validating and testing your application, and (3) ensuring your application meets applicable standards, and any other safety, security, regulatory or other requirements.

These resources are subject to change without notice. TI grants you permission to use these resources only for development of an application that uses the TI products described in the resource. Other reproduction and display of these resources is prohibited. No license is granted to any other TI intellectual property right or to any third party intellectual property right. TI disclaims responsibility for, and you fully indemnify TI and its representatives against any claims, damages, costs, losses, and liabilities arising out of your use of these resources.

TI’s products are provided subject to TI’s Terms of Sale, TI’s General Quality Guidelines, or other applicable terms available either on ti.com or provided in conjunction with such TI products. TI’s provision of these resources does not expand or otherwise alter TI’s applicable warranties or warranty disclaimers for TI products. Unless TI explicitly designates a product as custom or customer-specified, TI products are standard, catalog, general purpose devices.

TI objects to and rejects any additional or different terms you may propose.

Copyright © 2025, Texas Instruments Incorporated

Last updated 10/2025