ISO732x-Q1 Robust EMC, Low Power, Dual-Channel Digital Isolators

1 Features

- Qualified for Automotive Applications
- AEC-Q100 Qualified With the Following Results:
  - Device Temperature Grade 1: –40°C to +125°C Ambient Operating Temperature Range
  - Device HBM Classification Level 3A
  - Device CDM Classification Level C6
- Signaling Rate: 25 Mbps
- Integrated Noise Filter on the Inputs
- Default Output *High* and *Low* Options
- Low Power Consumption: Typical I_{CC} per Channel at 1 Mbps:
  - ISO7320-Q1: 1.2 mA (5-V Supplies), 0.9 mA (3.3-V Supplies)
  - ISO7321-Q1: 1.7 mA (5-V Supplies), 1.2 mA (3.3-V Supplies)
- Low Propagation Delay: 33 ns Typical (5-V Supplies)
- 3.3-V and 5-V Level Translation
- 65-kV/µs Transient Immunity, Typical (5-V Supplies)
- Robust Electromagnetic Compatibility (EMC)
  - System-level ESD, EFT, and Surge Immunity
  - Low Emissions
- Isolation Barrier Life: > 25 Years
- Operates from 3.3-V and 5-V Supplies
- Narrow Body SOIC-8 Package
- Safety and Regulatory Approvals:
  - 4242-V_{PK} Isolation per DIN V VDE V 0884-10 and DIN EN 61010-1
  - 3000-V_{RMS} Isolation for 1 minute per UL 1577
  - CSA Component Acceptance Notice 5A, IEC 60950-1 and IEC 61010-1 Standards
  - Planned CQC Certification per GB4943.1-2011

2 Applications

- Opto-Coupler Replacement in:
  - Industrial FieldBus
    - ProfiBus
    - ModBus
    - DeviceNet™ Data Buses
  - Servo Control Interface
  - Motor Control
  - Power Supplies
  - Battery Packs

3 Description

The ISO732x-Q1 family of devices provides galvanic isolation up to 3000 V_{RMS} for 1 minute per UL 1577 and 4242 V_{PK} per VDE V 0884-10. These devices have two isolated channels comprised of logic input and output buffers separated by silicon dioxide (SiO_2) insulation barriers.

The ISO7320-Q1 has both channels in the same direction while ISO7321-Q1 has the two channels in opposite direction. In case of input power or signal loss, the default output is *low* for orderable part numbers with suffix *F* and *high* for orderable part numbers without suffix *F*. See *Device Functional Modes* for more information. Used in conjunction with isolated power supplies, these devices prevent noise currents on a data bus or other circuits from entering the local ground and interfering with or damaging sensitive circuitry. The ISO732x-Q1 family of devices has integrated noise filters for harsh industrial environment where short noise pulses may be present at the device input pins. The ISO732x-Q1 family of devices has TTL input thresholds and operate from 3-V to 5.5-V supply levels.

Through innovative chip design and layout techniques, electromagnetic compatibility of the ISO732x-Q1 family of devices has been significantly enhanced to enable system-level ESD, EFT, Surge and Emissions compliance.

Device Information(1)

PART NUMBER	PACKAGE	BODY SIZE (NOM)
ISO7320-Q1	SOIC (8)	4.90 mm × 3.91 mm
ISO7321-Q1		

(1) For all available packages, see the orderable addendum at the end of the datasheet.

Simplified Schematic

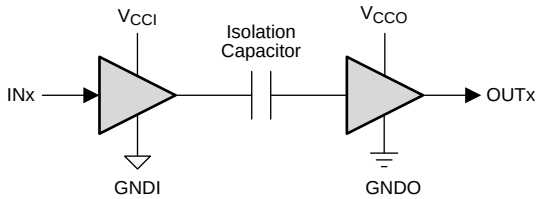

V_{CCI} and GNDI are supply and ground connections respectively for the input channels.

V_{CCO} and GNDO are supply and ground connections respectively for the output channels.

An IMPORTANT NOTICE at the end of this data sheet addresses availability, warranty, changes, use in safety-critical applications, intellectual property matters and other important disclaimers. PRODUCTION DATA.

Table of Contents

1 Features ... 1
2 Applications ... 1
3 Description ... 1
4 Revision History ... 2
5 Pin Configuration and Functions ... 3
6 Specifications ... 4
6.1 Absolute Maximum Ratings ... 4
6.2 ESD Ratings ... 4
6.3 Recommended Operating Conditions ... 4
6.4 Thermal Information ... 4
6.5 Electrical Characteristics—5-V Supply ... 5
6.6 Supply Current Characteristics—5-V Supply ... 5
6.7 Electrical Characteristics—3.3 V ... 6
6.8 Supply Current Characteristics—3.3-V Supply ... 6
6.9 Power Dissipation Characteristics ... 6
6.10 Switching Characteristics—5-V Supply ... 7
6.11 Switching Characteristics—3.3-V Supply ... 7
6.12 Typical Characteristics ... 8
7 Parameter Measurement Information ... 10
8 Detailed Description ... 11
8.1 Overview ... 11
8.2 Functional Block Diagram ... 11
8.3 Feature Description ... 12
8.4 Device Functional Modes ... 15
9 Application and Implementation ... 16
9.1 Application Information ... 16
9.2 Typical Application ... 16
10 Power Supply Recommendations ... 18
11 Layout ... 18
11.1 Layout Guidelines ... 18
11.2 Layout Example ... 19
12 Device and Documentation Support ... 20
12.1 Documentation Support ... 20
12.2 Related Links ... 20
12.3 Community Resource ... 20
12.4 Trademarks ... 20
12.5 Electrostatic Discharge Caution ... 20
12.6 Glossary ... 20
13 Mechanical, Packaging, and Orderable Information ... 20

4 Revision History

NOTE: Page numbers for previous revisions may differ from page numbers in the current version.

DATE	REVISION	NOTES
November 2015	*	Initial release.

Copyright © 2015, Texas Instruments Incorporated

5 Pin Configuration and Functions

ISO7320-Q1 D Package
8-Pin SOIC
Top View

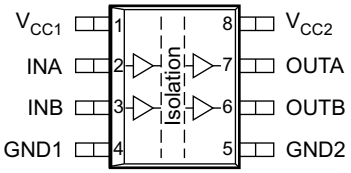

ISO7321-Q1 D Package
8-Pin SOIC
Top View

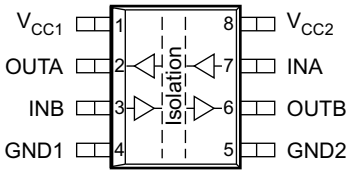

Pin Functions

PIN			I/O	DESCRIPTION
NAME	NO.			
	ISO7320-Q1	ISO7321-Q1		
INA	2	7	I	Input, channel A
INB	3	3	I	Input, channel B
GND1	4	4	—	Ground connection for V_{CC1}
GND2	5	5	—	Ground connection for V_{CC2}
OUTA	7	2	O	Output, channel A
OUTB	6	6	O	Output, channel B
V_{CC1}	1	1	—	Power supply, V_{CC1}
V_{CC2}	8	8	—	Power supply, V_{CC2}

Copyright © 2015, Texas Instruments Incorporated

6 Specifications

6.1 Absolute Maximum Ratings

over operating free-air temperature range (unless otherwise noted)[1]

			MIN	MAX	UNIT
V_{CC}	Supply voltage[2]	V_{CC1} , V_{CC2}	–0.5	6	V
	Voltage[2]	INx, OUTx	–0.5	V_{CC}+ 0.5[3]	V
I_O	Output current			±15	mA
T_J	Junction temperature			150	°C
T_{stg}	Storage temperature		–65	150	°C

(1) Stresses beyond those listed under *absolute maximum ratings* may cause permanent damage to the device. These are stress ratings only and functional operation of the device at these or any other conditions beyond those indicated under *recommended operating conditions* is not implied. Exposure to absolute-maximum-rated conditions for extended periods may affect device reliability.
(2) All voltage values are with respect to network ground terminal and are peak voltage values.
(3) Maximum voltage must not exceed 6 V.

6.2 ESD Ratings

			VALUE	UNIT
$V_{(ESD)}$	Electrostatic discharge	Human-body model (HBM), per AEC Q100-002[1]	±4000	V
		Charged-device model (CDM), per AEC Q100-011	±1500	

(1) AEC Q100-002 indicates that HBM stressing shall be in accordance with the ANSI/ESDA/JEDEC JS-001 specification.

6.3 Recommended Operating Conditions

		MIN	NOM	MAX	UNIT
V_{CC1}, V_{CC2}	Supply voltage,	3		5.5	V
I_{OH}	High-level output current	–4			mA
I_{OL}	Low-level output current			4	mA
V_{IH}	High-level input voltage	2		5.5	V
V_{IL}	Low-level input voltage	0		0.8	V
t_{ui}	Input pulse duration	40			ns
1 / t_{ui}	Signaling rate	0		25	Mbps
T_J [1]	Junction temperature			136	°C
T_A	Ambient temperature	-40	25	125	°C

(1) To maintain the recommended operating conditions for T_J, see the *Thermal Information* table.

6.4 Thermal Information

THERMAL METRIC[1]		ISO732x-Q1 D (SOIC) 8 PINS	UNIT
$R_{\theta JA}$	Junction-to-ambient thermal resistance	121	°C/W
$R_{\theta JCtop}$	Junction-to-case (top) thermal resistance	67.9	°C/W
$R_{\theta JB}$	Junction-to-board thermal resistance	61.6	°C/W
ψ_{JT}	Junction-to-top characterization parameter	21.5	°C/W
ψ_{JB}	Junction-to-board characterization parameter	61.1	°C/W
$R_{\theta JCbot}$	Junction-to-case (bottom) thermal resistance	N/A	°C/W

(1) For more information about traditional and new thermal metrics, see the *Semiconductor and IC Package Thermal Metrics application report*, SPRA953.

Copyright © 2015, Texas Instruments Incorporated

6.5 Electrical Characteristics—5-V Supply

V_{CC1} and V_{CC2} at 5 V ± 10% (over recommended operating conditions unless otherwise noted)

PARAMETER		TEST CONDITIONS	MIN	TYP	MAX	UNIT
V_{OH}	High-level output voltage	I_{OH} = –4 mA; see Figure 11	V_{CCO} (1) – 0.5	4.7		V
		I_{OH} = –20 µA; see Figure 11	V_{CCO} (1) – 0.1	5		
V_{OL}	Low-level output voltage	I_{OL} = 4 mA; see Figure 11		0.2	0.4	V
		I_{OL} = 20 µA; see Figure 11		0	0.1	
$V_{I(HYS)}$	Input threshold voltage hysteresis			460		mV
I_{IH}	High-level input current	IN = V_{CC}			10	µA
I_{IL}	Low-level input current	IN = 0 V	–10			µA
CMTI	Common-mode transient immunity	V_I = V_{CC} or 0 V; see Figure 13.	25	65		kV/µs

(1) V_{CCO} is supply voltage, V_{CC1} or V_{CC2}, for the output channel being measured.

6.6 Supply Current Characteristics—5-V Supply

All inputs switching with square wave clock signal for dynamic I_{CC} measurement. V_{CC1} and V_{CC2} at 5 V ± 10% (over recommended operating conditions unless otherwise noted)

PARAMETER	TEST CONDITIONS		SUPPLY CURRENT	MIN	TYP	MAX	UNIT
ISO7320-Q1							
Supply current for V_{CC1} and V_{CC2}	DC to 1 Mbps	DC Input: V_I = V_{CC} or 0 V, AC Input: C_L = 15 pF	I_{CC1}		0.4	0.9	mA
			I_{CC2}		2	3.2	
	10 Mbps	C_L = 15 pF	I_{CC1}		0.8	1.4	
			I_{CC2}		3.2	4.4	
	25 Mbps	C_L = 15 pF	I_{CC1}		1.4	2.3	
			I_{CC2}		4.9	6.8	
ISO7321-Q1							
Supply current for V_{CC1} and V_{CC2}	DC to 1 Mbps	DC Input: V_I = V_{CC} or 0 V, AC Input: C_L = 15 pF	I_{CC1} , I_{CC2}		1.7	2.8	mA
	10 Mbps	C_L = 15 pF	I_{CC1} , I_{CC2}		2.5	3.7	
	25 Mbps	C_L = 15 pF	I_{CC1} , I_{CC2}		3.7	5.4	

Copyright © 2015, Texas Instruments Incorporated

6.7 Electrical Characteristics—3.3 V

V_{CC1} and V_{CC2} at 3.3 V ± 10% (over recommended operating conditions unless otherwise noted)

PARAMETER		TEST CONDITIONS	MIN	TYP	MAX	UNIT
V_{OH}	High-level output voltage	I_{OH} = –4 mA; see Figure 11	V_{CCO} (1) – 0.5	3		V
		I_{OH} = –20 µA; see Figure 11	V_{CCO} (1) – 0.1	3.3		
V_{OL}	Low-level output voltage	I_{OL} = 4 mA; see Figure 11		0.2	0.4	V
		I_{OL} = 20 µA; see Figure 11		0	0.1	
$V_{I(HYS)}$	Input threshold voltage hysteresis			450		mV
I_{IH}	High-level input current	IN = V_{CC}			10	µA
I_{IL}	Low-level input current	IN = 0 V	–10			µA
CMTI	Common-mode transient immunity	V_I = V_{CC} or 0 V; see Figure 13	25	50		kV/µs

(1) V_{CCO} is supply voltage, V_{CC1} or V_{CC2}, for the output channel being measured.

6.8 Supply Current Characteristics—3.3-V Supply

All inputs switching with square wave clock signal for dynamic I_{CC} measurement. V_{CC1} and V_{CC2} at 3.3 V ± 10% (over recommended operating conditions unless otherwise noted)

PARAMETER	TEST CONDITIONS		SUPPLY CURRENT	MIN	TYP	MAX	UNIT
ISO7320-Q1							
Supply current for V_{CC1} and V_{CC2}	DC to 1 Mbps	DC Input: V_I = V_{CC} or 0 V, AC Input: C_L = 15 pF	I_{CC1}		0.2	0.5	mA
			I_{CC2}		1.5	2.5	
	10 Mbps	C_L = 15 pF	I_{CC1}		0.5	0.8	
			I_{CC2}		2.2	3.2	
	25 Mbps	C_L = 15 pF	I_{CC1}		0.9	1.4	
			I_{CC2}		3.3	4.7	
ISO7321-Q1							
Supply current for V_{CC1} and V_{CC2}	DC to 1 Mbps	DC Input: V_I = V_{CC} or 0 V, AC Input: C_L = 15 pF	I_{CC1} , I_{CC2}		1.2	2	mA
	10 Mbps	C_L = 15 pF	I_{CC1} , I_{CC2}		1.7	2.5	
	25 Mbps	C_L = 15 pF	I_{CC1} , I_{CC2}		2.5	3.6	

6.9 Power Dissipation Characteristics

V_{CC1} = V_{CC2} = 5.5 V, T_J = 150°C, C_L = 15 pF, input a 12.5 MHz 50% duty-cycle square wave (unless otherwise noted)

PARAMETER		TEST CONDITIONS	MIN	TYP	MAX	UNIT
P_D	Maximum power dissipation by ISO7320-Q1				56	mW
P_{D1}	Maximum power dissipation by side-1 of ISO7320-Q1				15	mW
P_{D2}	Maximum power dissipation by side-2 of ISO7320-Q1				41	mW
P_D	Maximum power dissipation by ISO7321-Q1				67	mW
P_{D1}	Maximum power dissipation by side-1 of ISO7321-Q1				33.5	mW
P_{D2}	Maximum power dissipation by side-2 of ISO7321-Q1				33.5	mW

Copyright © 2015, Texas Instruments Incorporated

6.10 Switching Characteristics—5-V Supply

V_{CC1} and V_{CC2} at 5 V ± 10% (over recommended operating conditions unless otherwise noted)

PARAMETER			TEST CONDITIONS	MIN	TYP	MAX	UNIT
t_{PLH}, t_{PHL}	Propagation delay time		See Figure 11	20	33	57	ns
PWD (1)	Pulse width distortion $\lvert t_{PHL} - t_{PLH} \rvert$		See Figure 11			4	ns
$t_{sk(o)}$ (2)	Channel-to-channel output skew time	ISO7320-Q1				2	ns
		ISO7321-Q1				17	
$t_{sk(pp)}$ (3)	Part-to-part skew time					23	ns
t_r	Output signal rise time		See Figure 11		2.4		ns
t_f	Output signal fall time		See Figure 11		2.1		ns
t_{fs}	Fail-safe output delay time from input power loss		See Figure 12		7.5		µs

(1) Also known as pulse skew.
(2) $t_{sk(o)}$ is the skew between outputs of a single device with all driving inputs connected together and the outputs switching in the same direction while driving identical loads.
(3) $t_{sk(pp)}$ is the magnitude of the difference in propagation delay times between any terminals of different devices switching in the same direction while operating at identical supply voltages, temperature, input signals and loads.

6.11 Switching Characteristics—3.3-V Supply

V_{CC1} and V_{CC2} at 3.3 V ± 10% (over recommended operating conditions unless otherwise noted)

PARAMETER			TEST CONDITIONS	MIN	TYP	MAX	UNIT
t_{PLH}, t_{PHL}	Propagation delay time		See Figure 11	22	37	66	ns
PWD (1)	Pulse width distortion $\lvert t_{PHL} - t_{PLH} \rvert$		See Figure 11			3	ns
$t_{sk(o)}$ (2)	Channel-to-channel output skew time	ISO7320-Q1				3	ns
		ISO7321-Q1				16	
$t_{sk(pp)}$ (3)	Part-to-part skew time					28	ns
t_r	Output signal rise time		See Figure 11		3.1		ns
t_f	Output signal fall time		See Figure 11		2.6		ns
t_{fs}	Fail-safe output delay time from input power loss		See Figure 12		7.4		µs

(1) Also known as pulse skew.
(2) $t_{sk(o)}$ is the skew between outputs of a single device with all driving inputs connected together and the outputs switching in the same direction while driving identical loads.
(3) $t_{sk(pp)}$ is the magnitude of the difference in propagation delay times between any terminals of different devices switching in the same direction while operating at identical supply voltages, temperature, input signals and loads.

Copyright © 2015, Texas Instruments Incorporated

6.12 Typical Characteristics

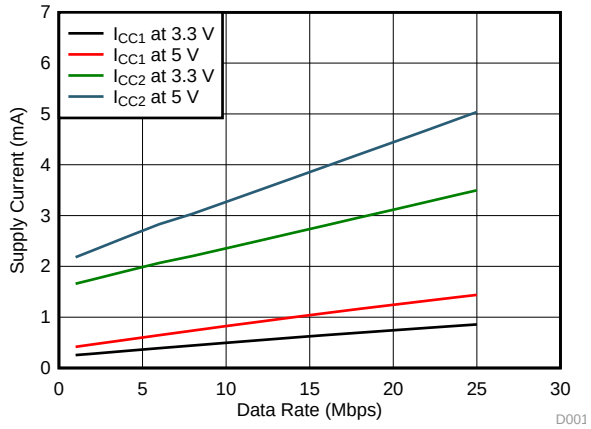

T_A = 25°C C_L = 15 pF

Figure 1. ISO7320-Q1 Supply Current vs Data Rate

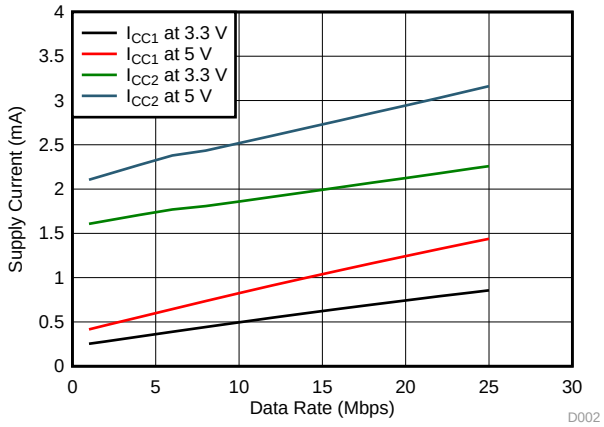

T_A = 25°C No Load

Figure 2. ISO7320-Q1 Supply Current vs Data Rate

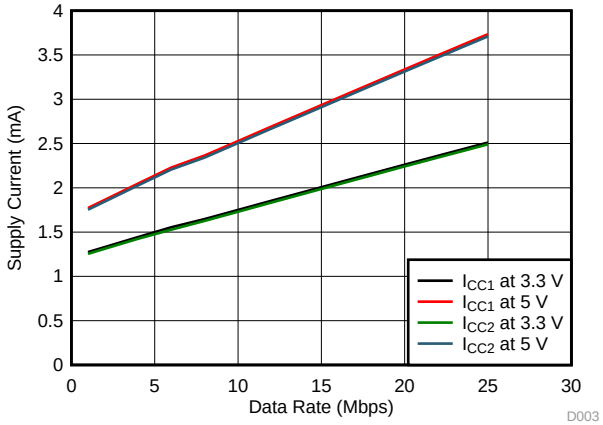

T_A = 25°C C_L = 15 pF

Figure 3. ISO7321-Q1 Supply Current vs Data Rate

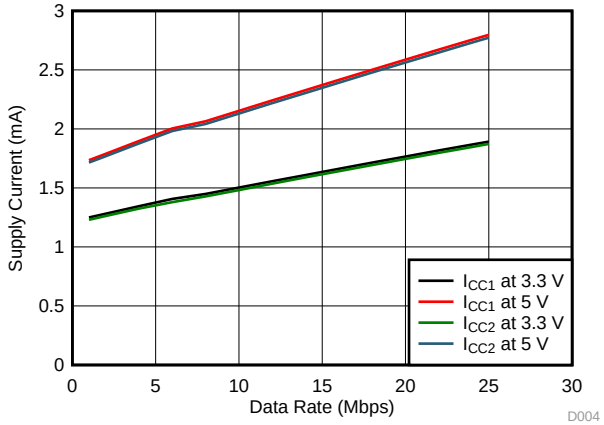

T_A = 25°C No Load

Figure 4. ISO7321-Q1 Supply Current vs Data Rate

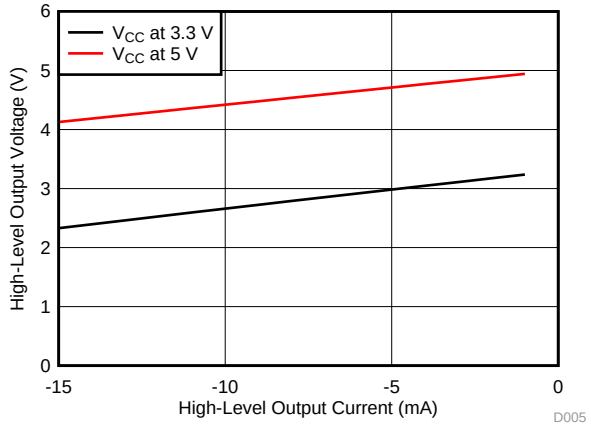

T_A = 25°C

Figure 5. High-Level Output Voltage vs High-Level Output Current

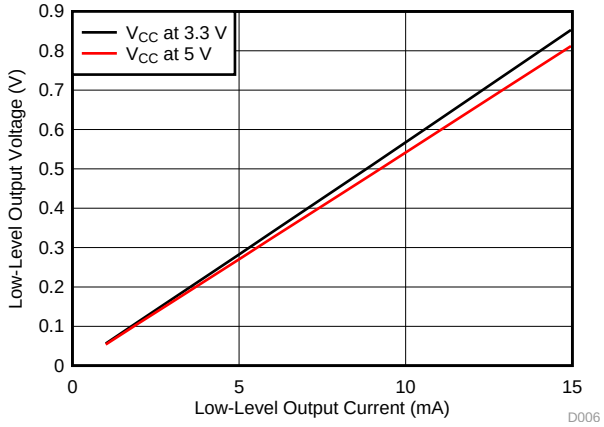

T_A = 25°C

Figure 6. Low-Level Output Voltage vs Low-Level Output Current

Copyright © 2015, Texas Instruments Incorporated

Typical Characteristics (continued)

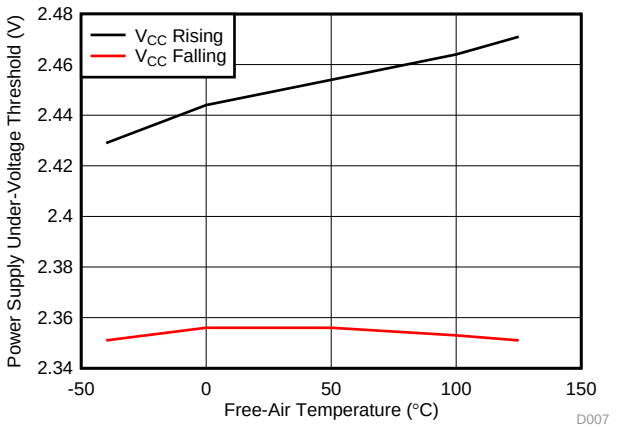

Figure 7. Power Supply Under Voltage Threshold vs Free-Air Temperature

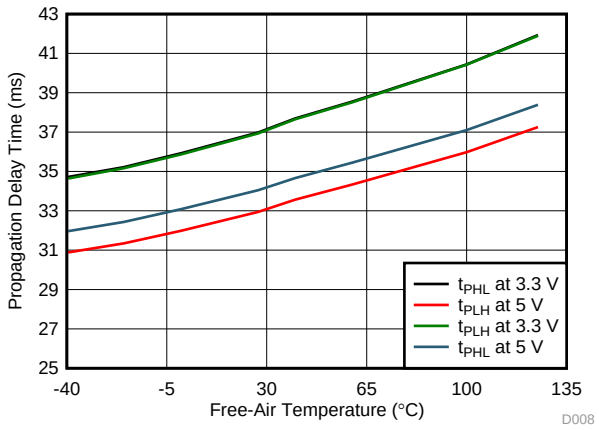

Figure 8. Propagation Delay Time vs Free-Air Temperature

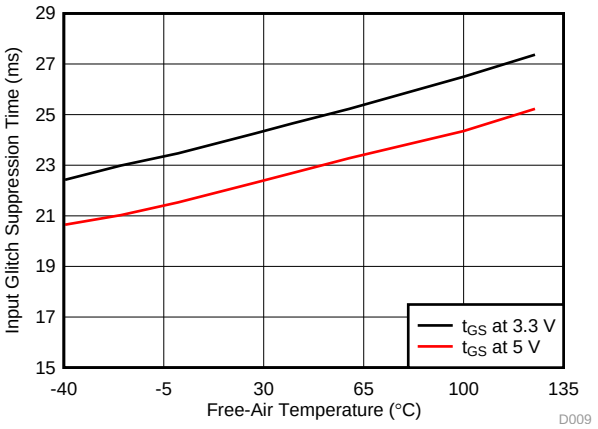

Figure 9. Input Glitch Suppression Time vs Free-Air Temperature

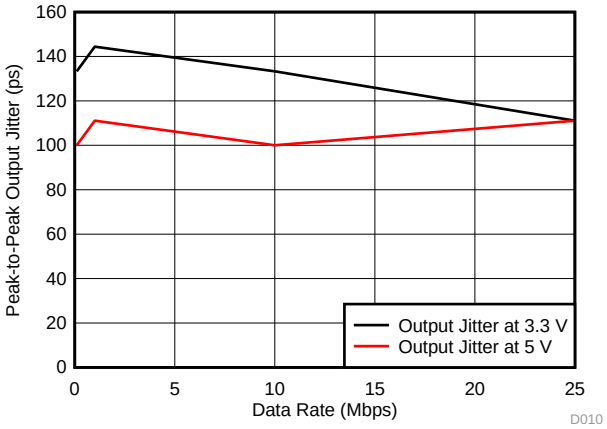

Figure 10. Peak-to-Peak Output Jitter vs Data Rate

7 Parameter Measurement Information

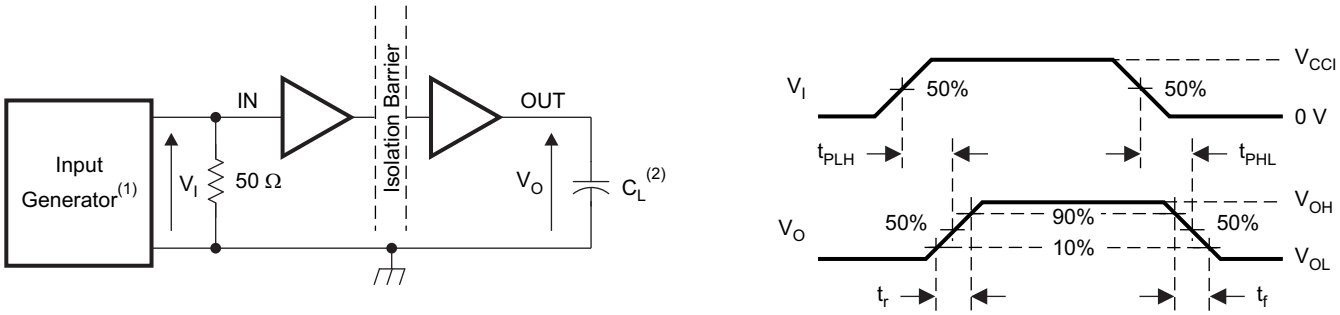

(1) The input pulse is supplied by a generator having the following characteristics: PRR ≤ 50 kHz, 50% duty cycle, t_r ≤ 3 ns, t_f ≤ 3 ns, Z_O = 50 Ω. At the input, a 50-Ω resistor is required to terminate the Input Generator signal. It is not needed in actual application.

(2) C_L = 15 pF and includes instrumentation and fixture capacitance within ±20%.

Figure 11. Switching Characteristic Test Circuit and Voltage Waveforms

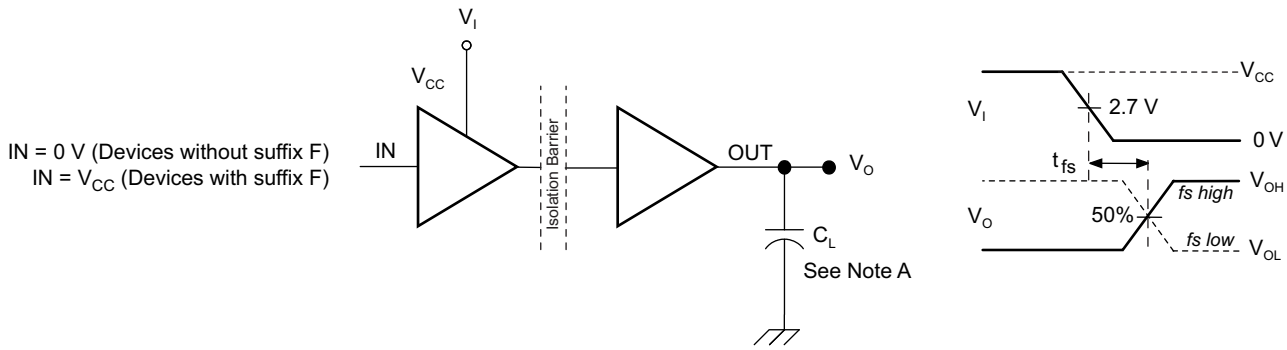

A. C_L = 15 pF and includes instrumentation and fixture capacitance within ±20%.

Figure 12. Fail-Safe Output Delay-Time Test Circuit and Voltage Waveforms

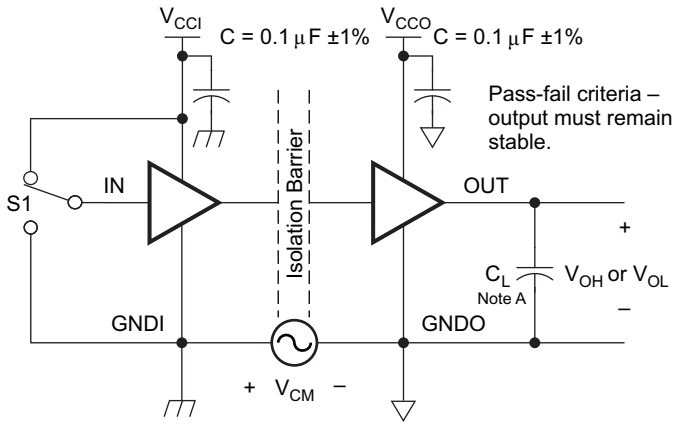

(1) C_L = 15 pF and includes instrumentation and fixture capacitance within ±20%.

Figure 13. Common-Mode Transient Immunity Test Circuit

Copyright © 2015, Texas Instruments Incorporated

8 Detailed Description

8.1 Overview

The isolator in Figure 14 is based on a capacitive isolation barrier technique. The I/O channel of the device consists of two internal data channels, a high-frequency (HF) channel with a bandwidth from 100 kbps up to 25 Mbps, and a low-frequency (LF) channel covering the range from 100 kbps down to DC.

In principle, a single-ended input signal entering the HF channel is split into a differential signal via the inverter gate at the input. The following capacitor-resistor networks differentiate the signal into transient pulses, which then are converted into CMOS levels by a comparator. The transient pulses at the input of the comparator can be either above or below the common mode voltage VREF depending on whether the input bit transitions from 0 to 1 or 1 to 0. The comparator threshold is adjusted based on the expected bit transition. A decision logic (DCL) at the output of the HF channel comparator measures the durations between signal transients. If the duration between two consecutive transients exceeds a certain time limit, (as in the case of a low-frequency signal), the DCL forces the output-multiplexer to switch from the high-frequency to the low-frequency channel.

8.2 Functional Block Diagram

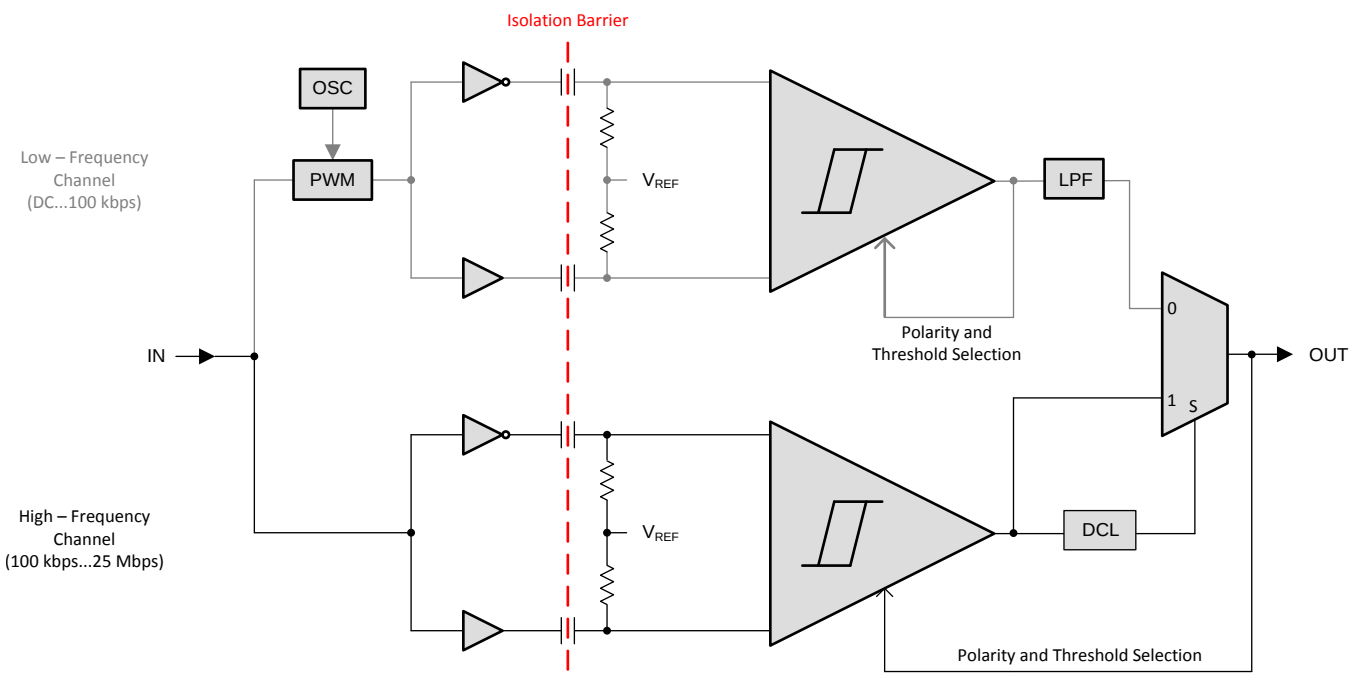

Figure 14. Conceptual Block Diagram of a Digital Capacitive Isolator

Because low-frequency input signals require the internal capacitors to assume prohibitively large values, these signals are pulse-width modulated (PWM) with the carrier frequency of an internal oscillator, thus creating a sufficiently high frequency, capable of passing the capacitive barrier. As the input is modulated, a low-pass filter (LPF) is required to remove the high-frequency carrier from the actual data before passing it on to the output multiplexer.

8.3 Feature Description

ORDERABLE DEVICE	CHANNEL DIRECTION	RATED ISOLATION	MAX DATA RATE	DEFAULT OUTPUT
ISO7320CQDQ1 and ISO7320CQDRQ1	Same	3000 V_{RMS} / 4242 V_{PK} (1)	25 Mbps	High
ISO7320FCQDQ1 and ISO7320FCQDRQ1				Low
ISO7321CQDQ1 and ISO7321CQDRQ1	Opposite			High
ISO7321FCQDQ1 and ISO7321FCQDRQ1				Low

(1) See the *Regulatory Information* section for detailed Isolation Ratings

8.3.1 High Voltage Feature Description

8.3.1.1 Insulation and Safety-Related Specifications for D-8 Package

over recommended operating conditions (unless otherwise noted)

PARAMETER		TEST CONDITIONS	MIN	TYP	MAX	UNIT
L(I01)	Minimum air gap (clearance)	Shortest terminal-to-terminal distance through air	4			mm
L(I02)	Minimum external tracking (creepage)	Shortest terminal-to-terminal distance across the package surface	4			mm
CTI	Tracking resistance (comparative tracking index)	DIN EN 60112 (VDE 0303-11); IEC 60112	400			V
DTI	Minimum internal gap (internal clearance)	Distance through insulation	13			µm
R_{IO}	Isolation resistance, input to output (1)	V_{IO} = 500 V, T_A = 25°C	10^{12}			Ω
		V_{IO} = 500 V, 100°C ≤ T_A ≤ 125°C	10^{11}			Ω
C_{IO}	Isolation capacitance, input to output (1)	V_{IO} = 0.4 sin (2πft), f = 1 MHz		1.5		pF
C_I	Input capacitance (2)	V_I = V_{CC} / 2 + 0.4 sin (2πft), f = 1 MHz, V_{CC} = 5 V		1.8		pF

(1) All pins on each side of the barrier tied together creating a two-terminal device.
(2) Measured from input pin to ground.

NOTE

Creepage and clearance requirements should be applied according to the specific equipment isolation standards of an application. Care should be taken to maintain the creepage and clearance distance of a board design to ensure that the mounting pads of the isolator on the printed-circuit board do not reduce this distance.

Creepage and clearance on a printed-circuit board become equal in certain cases. Techniques such as inserting grooves, ribs, or both on a printed circuit board are used to help increase these specifications.

Copyright © 2015, Texas Instruments Incorporated

8.3.1.2 Insulation Characteristics

over recommended operating conditions (unless otherwise noted)

PARAMETER(1)		TEST CONDITIONS	SPECIFICATION	UNIT
V_{IOWM}	Maximum isolation working voltage		400	V_{RMS}
V_{IORM}	Maximum repetitive peak voltage per DIN V VDE V 0884-10		566	V_{PK}
V_{PR}	Input-to-output test voltage per DIN V VDE V 0884-10	After Input/Output safety test subgroup 2/3, V_{PR} = V_{IORM} x 1.2, t = 10 s, Partial discharge < 5 pC	680	V_{PK}
		Method a, After environmental tests subgroup 1, V_{PR} = V_{IORM} x 1.6, t = 10 s, Partial Discharge < 5 pC	906	
		Method b1, V_{PR} = V_{IORM} x 1.875, t = 1 s (100% Production test) Partial discharge < 5 pC	1062	
V_{IOTM}	Maximum transient overvoltage per DIN V VDE V 0884-10	V_{TEST} = V_{IOTM} t = 60 sec (qualification) t= 1 sec (100% production)	4242	V_{PK}
V_{IOSM}	Maximum surge isolation voltage per DIN V VDE V 0884-10	Test method per IEC 60065, 1.2/50 µs waveform, V_{TEST} = 1.3 x V_{IOSM} = 7800 V_{PK} (qualification)	6000	V_{PK}
V_{ISO}	Withstand isolation voltage per UL 1577	V_{TEST} = V_{ISO} = 3000 V_{RMS}, t = 60 sec (qualification); V_{TEST} = 1.2 x V_{ISO} = 3600 V_{RMS}, t = 1 sec (100% production)	3000	V_{RMS}
R_S	Insulation resistance	V_{IO} = 500 V at T_S	$>10^9$	Ω
	Pollution degree		2	

(1) Climatic Classification 40/125/21

Table 1. IEC 60664-1 Ratings Table

PARAMETER	TEST CONDITIONS	SPECIFICATION
Basic isolation group	Material group	II
Installation classification	Rated mains voltage ≤ 150 V_{RMS}	I–IV
	Rated mains voltage ≤ 300 V_{RMS}	I–III

8.3.1.3 Regulatory Information

VDE	CSA	UL	CQC
Certified according to DIN V VDE V 0884-10 (VDE V 0884-10):2006-12	Approved under CSA Component Acceptance Notice 5A, IEC 60950-1, and IEC 61010-1	Recognized under UL 1577 Component Recognition Program	Plan to certify according to GB4943.1-2011
Basic Insulation Maximum Transient Overvoltage, 4242 V_{PK} Maximum Surge Isolation Voltage, 6000 V_{PK} Maximum Repetitive Peak Voltage, 566 V_{PK}	400 V_{RMS} Basic Insulation and 200 V_{RMS} Reinforced Insulation working voltage per CSA 60950-1-07+A1+A2 and IEC 60950-1 2nd Ed.+A1+A2; 300 V_{RMS} Basic Insulation working voltage per CSA 61010-1-12 and IEC 61010-1 3rd Ed.	Single protection, 3000 V_{RMS} (1)	Basic Insulation, Altitude ≤ 5000 m, Tropical Climate, 250 V_{RMS} maximum working voltage
Certificate number: 40016131	Master contract number: 220991	File number: E181974	Certification Planned

(1) Production tested ≥ 3600 V_{RMS} for 1 second in accordance with UL 1577.

8.3.1.4 Safety Limiting Values

Safety limiting intends to minimize potential damage to the isolation barrier upon failure of input or output circuitry. A failure of the I/O can allow low resistance to ground or the supply and, without current limiting, dissipate sufficient power to overheat the die and damage the isolation barrier, potentially leading to secondary system failures.

PARAMETER		TEST CONDITIONS	MIN	TYP	MAX	UNIT
I_S	Safety input, output, or supply current	$R_{\theta JA}$ = 121 °C/W, V_I = 5.5 V, T_J = 150°C, T_A = 25°C			188	mA
		$R_{\theta JA}$ = 121 °C/W, V_I = 3.6 V, T_J = 150°C, T_A = 25°C			287	
T_S	Maximum safety temperature				150	°C

The safety-limiting constraint is the absolute-maximum junction temperature specified in the *Absolute Maximum Ratings* table. The power dissipation and junction-to-air thermal impedance of the device installed in the application hardware determines the junction temperature. The assumed junction-to-air thermal resistance in the *Thermal Information* table is that of a device installed on a High-K Test Board for Leaded Surface-Mount Packages. The power is the recommended maximum input voltage times the current. The junction temperature is then the ambient temperature plus the power times the junction-to-air thermal resistance.

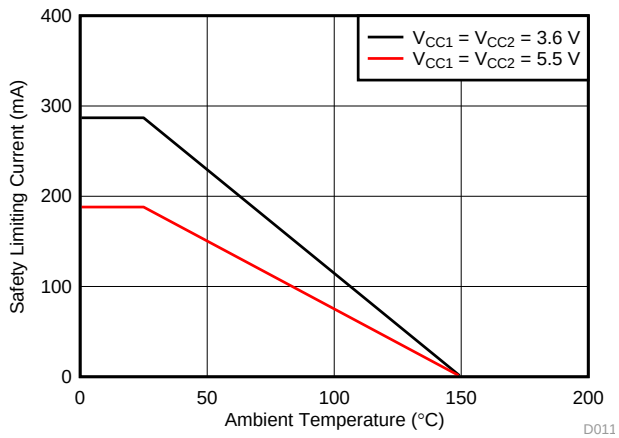

Figure 15. Thermal Derating Curve per VDE

Copyright © 2015, Texas Instruments Incorporated

8.4 Device Functional Modes

Table 2 lists the functional modes for the ISO732x-Q1 family of devices.

Table 2. Function Table(1)

V_{CCI}	V_{CCO}	INA, INB	OUTA, OUTB	
			ISO732xCQDQ1 AND ISO732xCQDRQ1	ISO732xFCQDQ1 AND ISO732xFCQDRQ1
PU	PU	H	H	H
		L	L	L
		Open	H(2)	L(3)
PD	PU	X	H(2)	L(3)
X	PD	X	Undetermined	Undetermined

(1) V_{CCI} = Input-side V_{CC}; V_{CCO} = Output-side V_{CC}; PU = Powered up (V_{CC} ≥ 3 V); PD = Powered down (V_{CC} ≤ 2.1 V); X = Irrelevant; H = High level; L = Low level; Open = Not connected
(2) In fail-safe condition, output defaults to high level
(3) In fail-safe condition, output defaults to low level

8.4.1 Device I/O Schematics

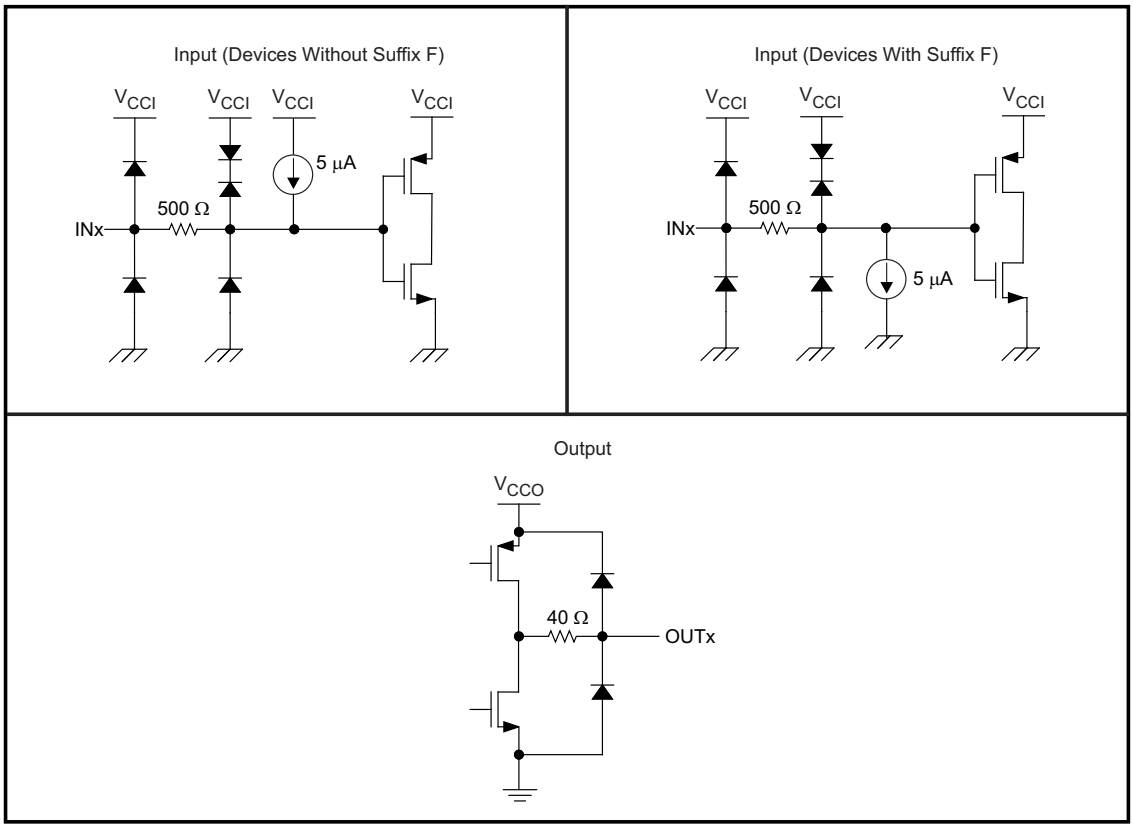

Figure 16. Device I/O Schematics

9 Application and Implementation

NOTE

Information in the following applications sections is not part of the TI component specification, and TI does not warrant its accuracy or completeness. TI's customers are responsible for determining suitability of components for their purposes. Customers should validate and test their design implementation to confirm system functionality.

9.1 Application Information

The ISO732x-Q1 family of devices uses single-ended TTL-logic switching technology. The supply voltage range is from 3 V to 5.5 V for both supplies, V_{CC1} and V_{CC2}. When designing with digital isolators, keep in mind that because of the single-ended design structure, digital isolators do not conform to any specific interface standard and are only intended for isolating single-ended CMOS or TTL digital signal lines. The isolator is typically placed between the data controller (essentially, µC or UART), and a data converter or a line transceiver, regardless of the interface type or standard.

9.2 Typical Application

The ISO7321-Q1 device can be used with Texas Instruments' Piccolo™ microcontroller, CAN transceiver, transformer driver, and voltage regulator to create an isolated CAN interface.

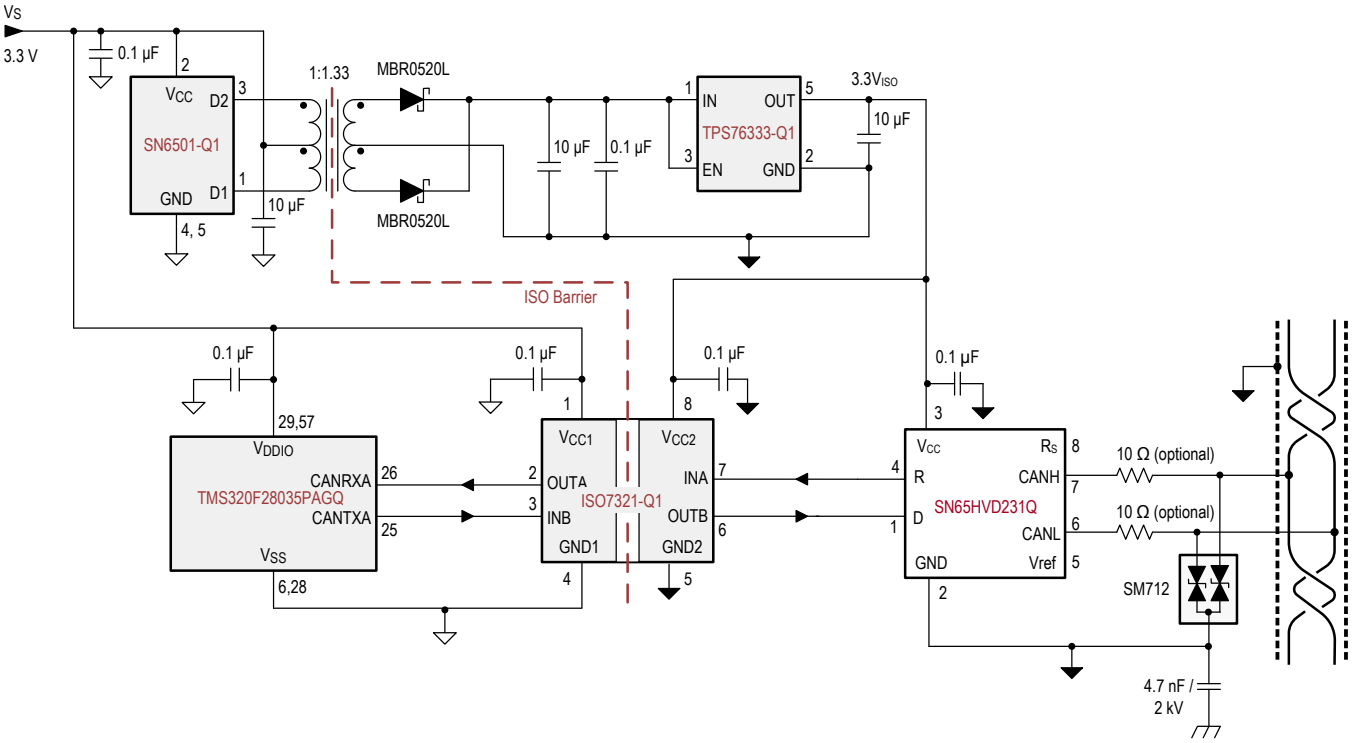

Multiple pins and discrete components omitted for clarity purpose.

Figure 17. Isolated CAN Interface

Copyright © 2015, Texas Instruments Incorporated

Typical Application (continued)

9.2.1 Design Requirements

9.2.1.1 Typical Supply Current Equations

For the equations in this section, the following is true:

- I_{CC1} and I_{CC2} are typical supply currents measured in mA
- f is the data rate measured in Mbps
- C_L is the capacitive load measured in pF

9.2.1.1.1 ISO7320-Q1

At $V_{CC1} = V_{CC2} = 5$ V

$$I_{CC1} = 0.3838 + (0.0431 \times f) \quad (1)$$

$$I_{CC2} = 2.74567 + (0.08433 \times f) + (0.01 \text{ x } f \times C_L) \quad (2)$$

At $V_{CC1} = V_{CC2} = 3.3$ V

$$I_{CC1} = 0.2394 + (0.02355 \times f) \quad (3)$$

$$I_{CC2} = 2.10681 + (0.04374 \times f) + (0.007045 \times f \times C_L) \quad (4)$$

9.2.1.1.2 ISO7321-Q1

At $V_{CC1} = V_{CC2} = 5$ V

$$I_{CC1} \text{ and } I_{CC2} = 1.5877 + (0.066 \times f) + (0.00123 \times f \times C_L) \quad (5)$$

At $V_{CC1} = V_{CC2} = 3.3$ V

$$I_{CC1} \text{ and } I_{CC2} = 1.187572 + (0.019399 \times f) + (0.0019029 \times f \times C_L) \quad (6)$$

9.2.2 Detailed Design Procedure

9.2.2.1 Electromagnetic Compatibility (EMC) Considerations

Many applications in harsh industrial environment are sensitive to disturbances such as electrostatic discharge (ESD), electrical fast transient (EFT), surge and electromagnetic emissions. These electromagnetic disturbances are regulated by international standards such as IEC 61000-4-x and CISPR 22. Although system-level performance and reliability depends, to a large extent, on the application board design and layout, the ISO732x-Q1 family of devices incorporates many chip-level design improvements for overall system robustness. Some of these improvements include:

- Robust ESD protection cells for input and output signal pins and inter-chip bond pads.
- Low-resistance connectivity of ESD cells to supply and ground pins.
- Enhanced performance of high voltage isolation capacitor for better tolerance of ESD, EFT and surge events.
- Bigger on-chip decoupling capacitors to bypass undesirable high energy signals through a low impedance path.
- PMOS and NMOS devices isolated from each other by using guard rings to avoid triggering of parasitic SCRs.
- Reduced common mode currents across the isolation barrier by ensuring purely differential internal operation.

Copyright © 2015, Texas Instruments Incorporated

Typical Application (continued)

9.2.3 Application Curves

The following typical eye diagrams of the ISO732x-Q1 family of devices indicate low jitter and wide open eye at the maximum data rate of 25 Mbps.

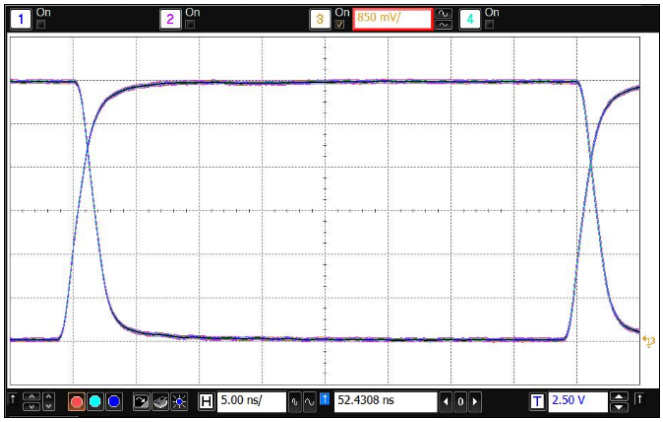

Figure 18. Eye Diagram at 25 Mbps, 5 V and 25°C

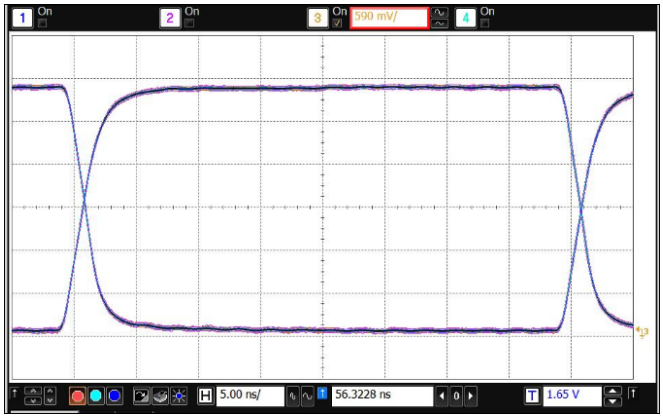

Figure 19. Eye Diagram at 25 Mbps, 3.3 V and 25°C

10 Power Supply Recommendations

To help ensure reliable operation at data rates and supply voltages, a 0.1-µF bypass capacitor is recommended at the input and output supply pins (V_{CC1} and V_{CC2}). The capacitors should be placed as close to the supply pins as possible. If only a single primary-side power supply is available in an application, isolated power can be generated for the secondary-side with the help of a transformer driver such as Texas Instruments' SN6501-Q1. For such applications, detailed power supply design and transformer selection recommendations are available in the SN6501-Q1 datasheet (SLLSEF3) .

11 Layout

11.1 Layout Guidelines

A minimum of four layers is required to accomplish a low EMI PCB design (see Figure 20). Layer stacking should be in the following order (top-to-bottom): high-speed signal layer, ground plane, power plane and low-frequency signal layer.

- Routing the high-speed traces on the top layer avoids the use of vias (and the introduction of their inductances) and allows for clean interconnects between the isolator and the transmitter and receiver circuits of the data link.
- Placing a solid ground plane next to the high-speed signal layer establishes controlled impedance for transmission line interconnects and provides an excellent low-inductance path for the return current flow.
- Placing the power plane next to the ground plane creates additional high-frequency bypass capacitance of approximately 100 pF/in^2.
- Routing the slower speed control signals on the bottom layer allows for greater flexibility as these signal links usually have margin to tolerate discontinuities such as vias.

If an additional supply voltage plane or signal layer is needed, add a second power or ground plane system to the stack to keep it symmetrical. This makes the stack mechanically stable and prevents it from warping. Also the power and ground plane of each power system can be placed closer together, thus increasing the high-frequency bypass capacitance significantly.

For detailed layout recommendations, see the application note, *Digital Isolator Design Guide*, SLLA284.

Copyright © 2015, Texas Instruments Incorporated

Layout Guidelines (continued)

11.1.1 PCB Material

For digital circuit boards operating below 150 Mbps, (or rise and fall times higher than 1 ns), and trace lengths of up to 10 inches, use standard FR-4 UL94V-0 printed circuit board. This type of PCB is preferred over cheaper alternatives because of lower dielectric losses at high frequencies, less moisture absorption, greater strength and stiffness, and self-extinguishing flammability-characteristics.

11.2 Layout Example

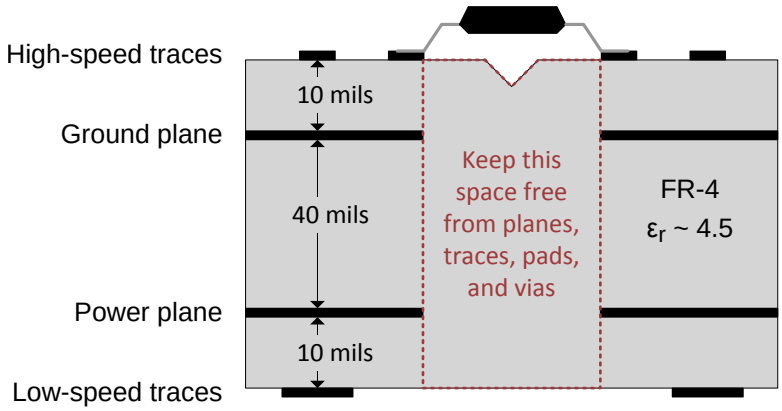

Figure 20. Recommended Layer Stack

12 Device and Documentation Support

12.1 Documentation Support

12.1.1 Related Documentation

For related documentation see the following:

- *Digital Isolator Design Guide*, SLLA284
- *Isolation Glossary*, SLLA353
- *SN6501-Q1 Transformer Driver for Isolated Power Supplies*, SLLSEF3
- *SN65HVD231Q-Q1 3.3-V CAN Transceiver*, SGLS398
- TMS320F28035 *Piccolo™ Microcontrollers*, SPRS584
- TPS76333-Q1 *Low-Power 150-mA Low-Dropout Linear Regulators*, SGLS247

12.2 Related Links

The table below lists quick access links. Categories include technical documents, support and community resources, tools and software, and quick access to sample or buy.

Table 3. Related Links

PARTS	PRODUCT FOLDER	SAMPLE & BUY	TECHNICAL DOCUMENTS	TOOLS & SOFTWARE	SUPPORT & COMMUNITY
ISO7320-Q1	Click here	Click here	Click here	Click here	Click here
ISO7321-Q1	Click here	Click here	Click here	Click here	Click here

12.3 Community Resource

The following links connect to TI community resources. Linked contents are provided "AS IS" by the respective contributors. They do not constitute TI specifications and do not necessarily reflect TI's views; see TI's Terms of Use.

TI E2E™ Online Community ***TI's Engineer-to-Engineer (E2E) Community.*** Created to foster collaboration among engineers. At e2e.ti.com, you can ask questions, share knowledge, explore ideas and help solve problems with fellow engineers.

Design Support ***TI's Design Support*** Quickly find helpful E2E forums along with design support tools and contact information for technical support.

12.4 Trademarks

DeviceNet, Piccolo, E2E are trademarks of Texas Instruments.
All other trademarks are the property of their respective owners.

12.5 Electrostatic Discharge Caution

These devices have limited built-in ESD protection. The leads should be shorted together or the device placed in conductive foam during storage or handling to prevent electrostatic damage to the MOS gates.

12.6 Glossary

SLYZ022 — *TI Glossary*.

This glossary lists and explains terms, acronyms, and definitions.

13 Mechanical, Packaging, and Orderable Information

The following pages include mechanical packaging and orderable information. This information is the most current data available for the designated devices. This data is subject to change without notice and revision of this document. For browser-based versions of this data sheet, refer to the left-hand navigation.

Copyright © 2015, Texas Instruments Incorporated

PACKAGE OUTLINE

D0008B

SOIC - 1.75 mm max height

SOIC

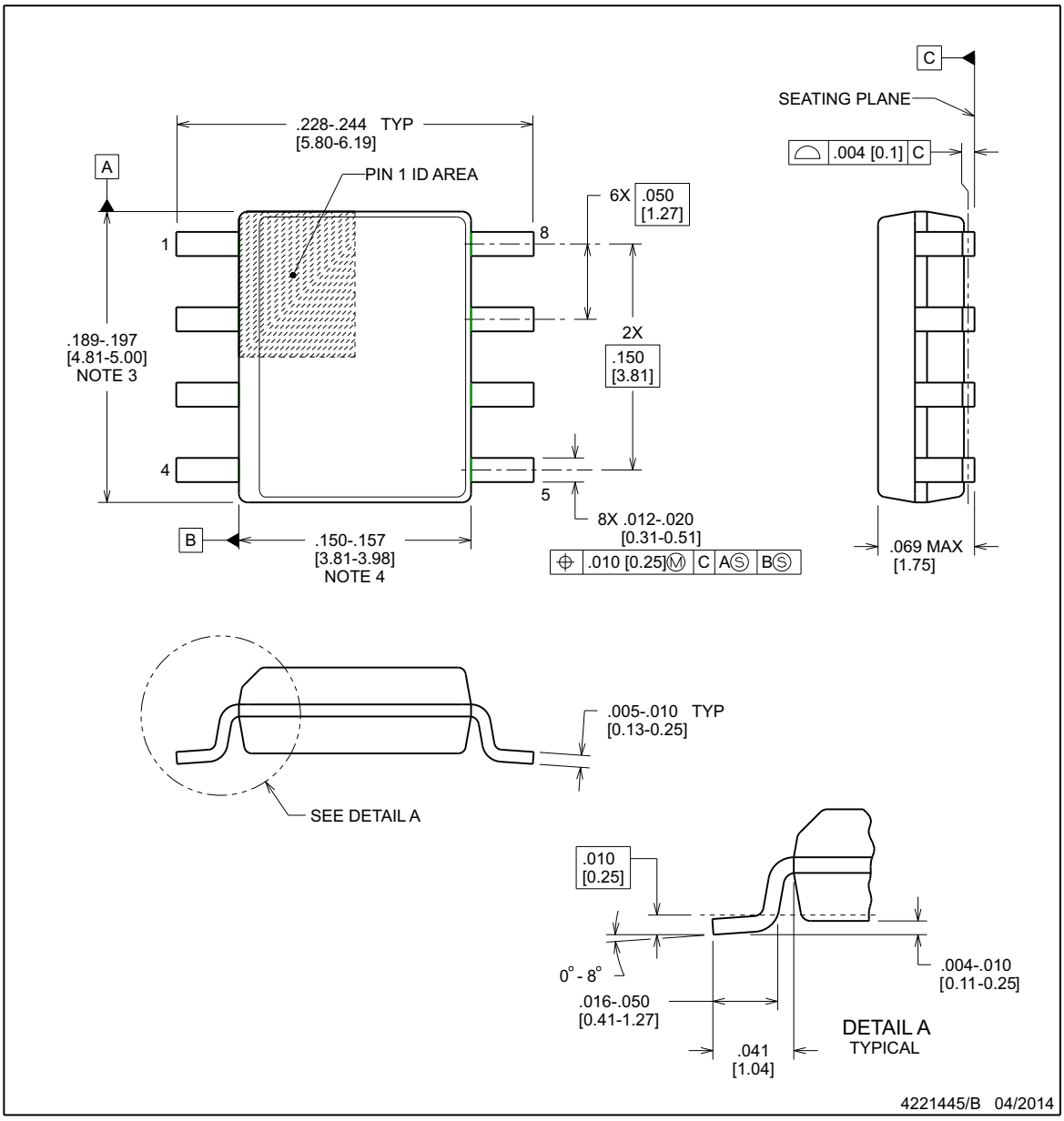

NOTES:

1. Linear dimensions are in inches [millimeters]. Dimensions in parenthesis are for reference only. Controlling dimensions are in inches. Dimensioning and tolerancing per ASME Y14.5M.
2. This drawing is subject to change without notice.
3. This dimension does not include mold flash, protrusions, or gate burrs. Mold flash, protrusions, or gate burrs shall not exceed .006 [0.15], per side.
4. This dimension does not include interlead flash.
5. Reference JEDEC registration MS-012, variation AA.

Copyright © 2015, Texas Instruments Incorporated

EXAMPLE BOARD LAYOUT

D0008B

SOIC - 1.75 mm max height

SOIC

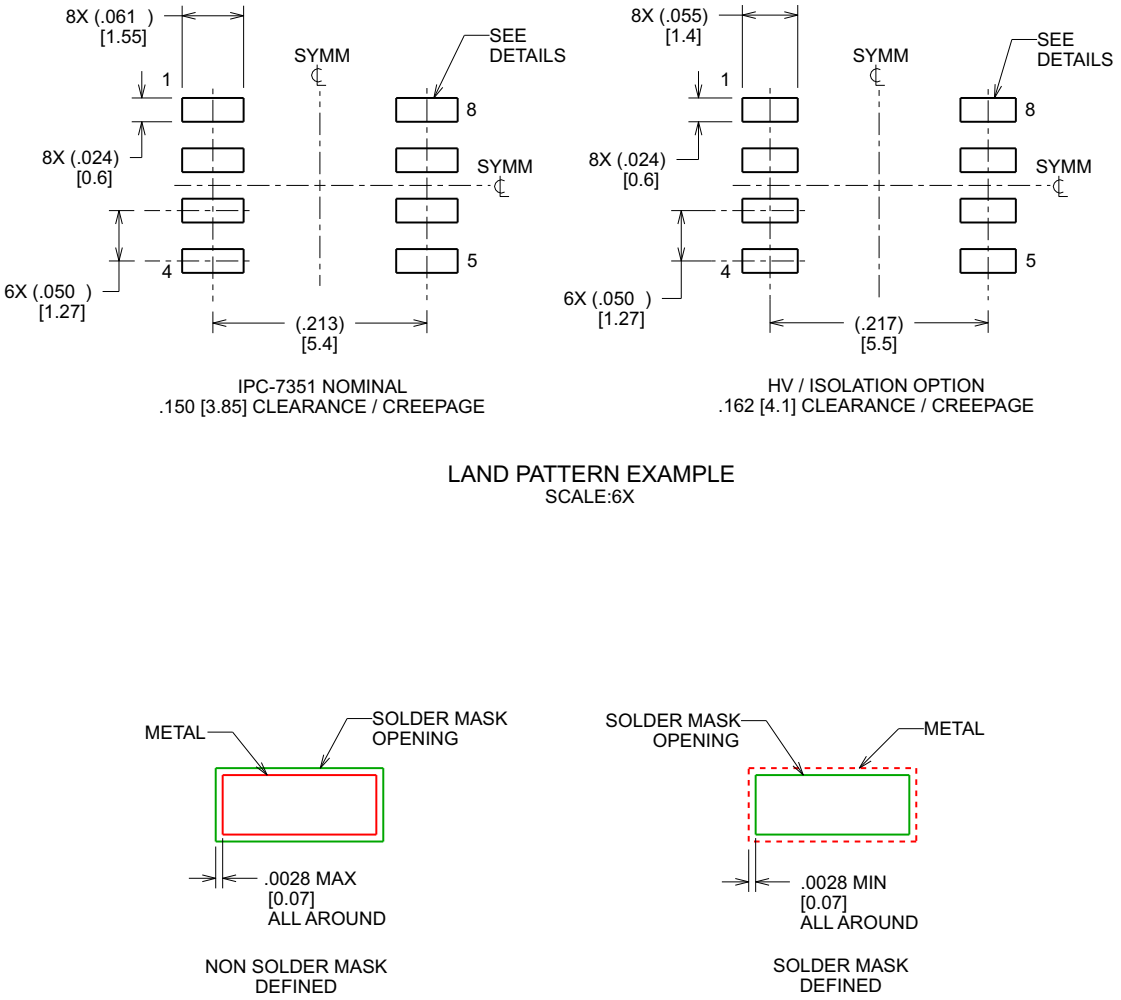

NOTES: (continued)

6. Publication IPC-7351 may have alternate designs.
7. Solder mask tolerances between and around signal pads can vary based on board fabrication site.

Copyright © 2015, Texas Instruments Incorporated

EXAMPLE STENCIL DESIGN

D0008B

SOIC - 1.75 mm max height

SOIC

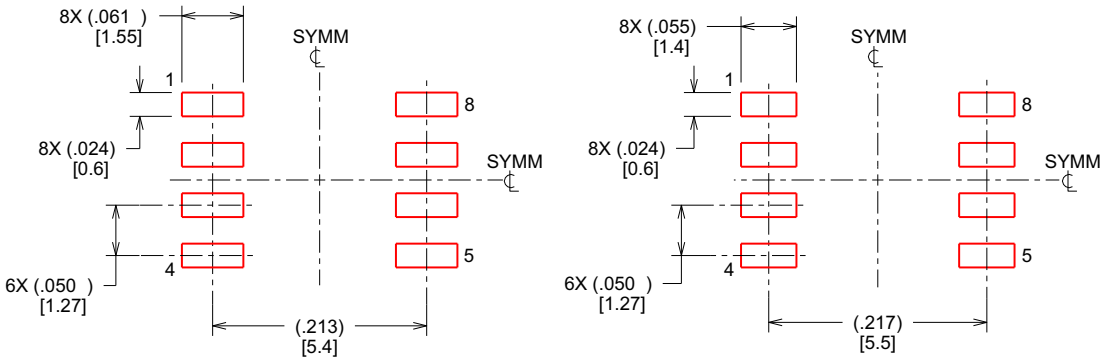

IPC-7351 NOMINAL
.150 [3.85] CLEARANCE / CREEPAGE

HV / ISOLATION OPTION
.162 [4.1] CLEARANCE / CREEPAGE

SOLDER PASTE EXAMPLE
BASED ON .005 INCH [0.127 MM] THICK STENCIL
SCALE:6X

4221445/B 04/2014

NOTES: (continued)

8. Laser cutting apertures with trapezoidal walls and rounded corners may offer better paste release. IPC-7525 may have alternate design recommendations.
9. Board assembly site may have different recommendations for stencil design.

Copyright © 2015, Texas Instruments Incorporated

PACKAGING INFORMATION

Orderable part number	Status (1)	Material type (2)	Package | Pins	Package qty | Carrier	RoHS (3)	Lead finish/ Ball material (4)	MSL rating/ Peak reflow (5)	Op temp (°C)	Part marking (6)
ISO7320CQDQ1	Active	Production	SOIC (D) | 8	75 | TUBE	Yes	FULL NIPDAU	Level-2-260C-1 YEAR	-40 to 125	7320Q
ISO7320CQDQ1.A	Active	Production	SOIC (D) | 8	75 | TUBE	Yes	FULL NIPDAU	Level-2-260C-1 YEAR	-40 to 125	7320Q
ISO7320CQDQ1.B	Active	Production	SOIC (D) | 8	75 | TUBE	-	Call TI	Call TI	-40 to 125	
ISO7320CQDRQ1	Active	Production	SOIC (D) | 8	2500 | LARGE T&R	Yes	FULL NIPDAU	Level-2-260C-1 YEAR	-40 to 125	7320Q
ISO7320CQDRQ1.A	Active	Production	SOIC (D) | 8	2500 | LARGE T&R	Yes	FULL NIPDAU	Level-2-260C-1 YEAR	-40 to 125	7320Q
ISO7320CQDRQ1.B	Active	Production	SOIC (D) | 8	2500 | LARGE T&R	-	Call TI	Call TI	-40 to 125	
ISO7320FCQDQ1	Active	Production	SOIC (D) | 8	75 | TUBE	Yes	FULL NIPDAU	Level-2-260C-1 YEAR	-40 to 125	7320FQ
ISO7320FCQDQ1.A	Active	Production	SOIC (D) | 8	75 | TUBE	Yes	FULL NIPDAU	Level-2-260C-1 YEAR	-40 to 125	7320FQ
ISO7320FCQDQ1.B	Active	Production	SOIC (D) | 8	75 | TUBE	-	Call TI	Call TI	-40 to 125	
ISO7320FCQDRQ1	Active	Production	SOIC (D) | 8	2500 | LARGE T&R	Yes	FULL NIPDAU	Level-2-260C-1 YEAR	-40 to 125	7320FQ
ISO7320FCQDRQ1.A	Active	Production	SOIC (D) | 8	2500 | LARGE T&R	Yes	FULL NIPDAU	Level-2-260C-1 YEAR	-40 to 125	7320FQ
ISO7320FCQDRQ1.B	Active	Production	SOIC (D) | 8	2500 | LARGE T&R	-	Call TI	Call TI	-40 to 125	
ISO7321CQDQ1	Active	Production	SOIC (D) | 8	75 | TUBE	Yes	FULL NIPDAU	Level-2-260C-1 YEAR	-40 to 125	7321Q
ISO7321CQDQ1.A	Active	Production	SOIC (D) | 8	75 | TUBE	Yes	FULL NIPDAU	Level-2-260C-1 YEAR	-40 to 125	7321Q
ISO7321CQDQ1.B	Active	Production	SOIC (D) | 8	75 | TUBE	-	Call TI	Call TI	-40 to 125	
ISO7321CQDRQ1	Active	Production	SOIC (D) | 8	2500 | LARGE T&R	Yes	FULL NIPDAU	Level-2-260C-1 YEAR	-40 to 125	7321Q
ISO7321CQDRQ1.A	Active	Production	SOIC (D) | 8	2500 | LARGE T&R	Yes	FULL NIPDAU	Level-2-260C-1 YEAR	-40 to 125	7321Q
ISO7321CQDRQ1.B	Active	Production	SOIC (D) | 8	2500 | LARGE T&R	-	Call TI	Call TI	-40 to 125	
ISO7321FCQDQ1	Active	Production	SOIC (D) | 8	75 | TUBE	Yes	FULL NIPDAU	Level-2-260C-1 YEAR	-40 to 125	7321FQ
ISO7321FCQDQ1.A	Active	Production	SOIC (D) | 8	75 | TUBE	Yes	FULL NIPDAU	Level-2-260C-1 YEAR	-40 to 125	7321FQ
ISO7321FCQDRQ1	Active	Production	SOIC (D) | 8	2500 | LARGE T&R	Yes	FULL NIPDAU	Level-2-260C-1 YEAR	-40 to 125	7321FQ
ISO7321FCQDRQ1.A	Active	Production	SOIC (D) | 8	2500 | LARGE T&R	Yes	FULL NIPDAU	Level-2-260C-1 YEAR	-40 to 125	7321FQ
ISO7321FCQDRQ1.B	Active	Production	SOIC (D) | 8	2500 | LARGE T&R	-	Call TI	Call TI	-40 to 125	

(1) **Status:** For more details on status, see our product life cycle.

(2) **Material type:** When designated, preproduction parts are prototypes/experimental devices, and are not yet approved or released for full production. Testing and final process, including without limitation quality assurance, reliability performance testing, and/or process qualification, may not yet be complete, and this item is subject to further changes or possible discontinuation. If available for ordering, purchases will be subject to an additional waiver at checkout, and are intended for early internal evaluation purposes only. These items are sold without warranties of any kind.

(3) **RoHS values:** Yes, No, RoHS Exempt. See the TI RoHS Statement for additional information and value definition.

(4) **Lead finish/Ball material:** Parts may have multiple material finish options. Finish options are separated by a vertical ruled line. Lead finish/Ball material values may wrap to two lines if the finish value exceeds the maximum column width.

(5) **MSL rating/Peak reflow:** The moisture sensitivity level ratings and peak solder (reflow) temperatures. In the event that a part has multiple moisture sensitivity ratings, only the lowest level per JEDEC standards is shown. Refer to the shipping label for the actual reflow temperature that will be used to mount the part to the printed circuit board.

(6) **Part marking:** There may be an additional marking, which relates to the logo, the lot trace code information, or the environmental category of the part.

Multiple part markings will be inside parentheses. Only one part marking contained in parentheses and separated by a "~" will appear on a part. If a line is indented then it is a continuation of the previous line and the two combined represent the entire part marking for that device.

Important Information and Disclaimer: The information provided on this page represents TI's knowledge and belief as of the date that it is provided. TI bases its knowledge and belief on information provided by third parties, and makes no representation or warranty as to the accuracy of such information. Efforts are underway to better integrate information from third parties. TI has taken and continues to take reasonable steps to provide representative and accurate information but may not have conducted destructive testing or chemical analysis on incoming materials and chemicals. TI and TI suppliers consider certain information to be proprietary, and thus CAS numbers and other limited information may not be available for release.

In no event shall TI's liability arising out of such information exceed the total purchase price of the TI part(s) at issue in this document sold by TI to Customer on an annual basis.

TAPE AND REEL INFORMATION

REEL DIMENSIONS

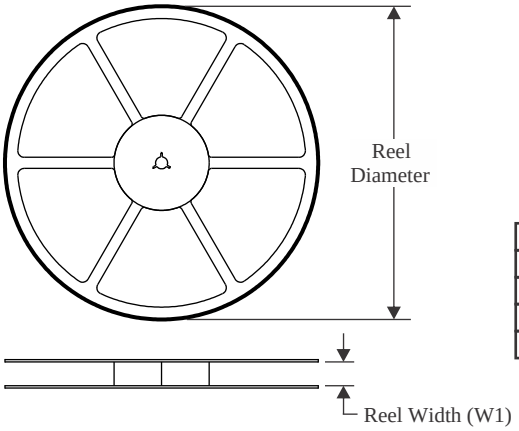

TAPE DIMENSIONS

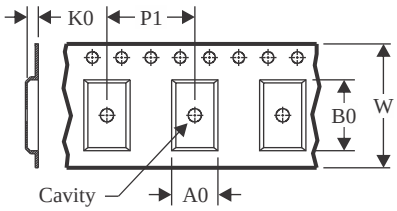

A0	Dimension designed to accommodate the component width
B0	Dimension designed to accommodate the component length
K0	Dimension designed to accommodate the component thickness
W	Overall width of the carrier tape
P1	Pitch between successive cavity centers

QUADRANT ASSIGNMENTS FOR PIN 1 ORIENTATION IN TAPE

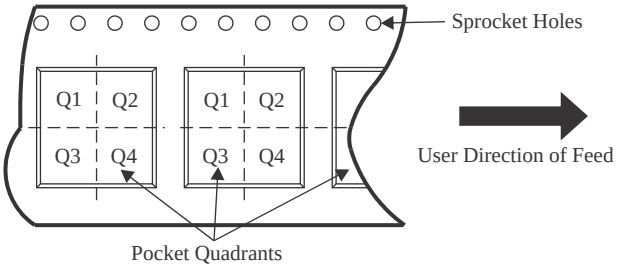

*All dimensions are nominal

Device	Package Type	Package Drawing	Pins	SPQ	Reel Diameter (mm)	Reel Width W1 (mm)	A0 (mm)	B0 (mm)	K0 (mm)	P1 (mm)	W (mm)	Pin1 Quadrant
ISO7320CQDRQ1	SOIC	D	8	2500	330.0	12.4	6.4	5.2	2.1	8.0	12.0	Q1
ISO7320FCQDRQ1	SOIC	D	8	2500	330.0	12.4	6.4	5.2	2.1	8.0	12.0	Q1
ISO7321CQDRQ1	SOIC	D	8	2500	330.0	12.4	6.4	5.2	2.1	8.0	12.0	Q1
ISO7321FCQDRQ1	SOIC	D	8	2500	330.0	12.4	6.4	5.2	2.1	8.0	12.0	Q1

TAPE AND REEL BOX DIMENSIONS

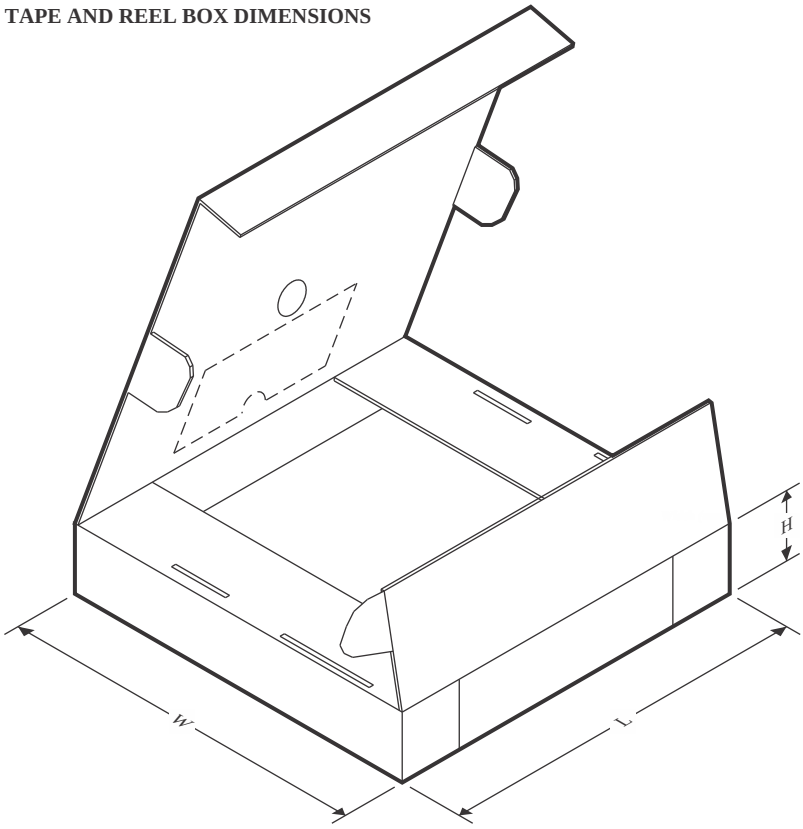

*All dimensions are nominal

Device	Package Type	Package Drawing	Pins	SPQ	Length (mm)	Width (mm)	Height (mm)
ISO7320CQDRQ1	SOIC	D	8	2500	350.0	350.0	43.0
ISO7320FCQDRQ1	SOIC	D	8	2500	350.0	350.0	43.0
ISO7321CQDRQ1	SOIC	D	8	2500	350.0	350.0	43.0
ISO7321FCQDRQ1	SOIC	D	8	2500	350.0	350.0	43.0

TUBE

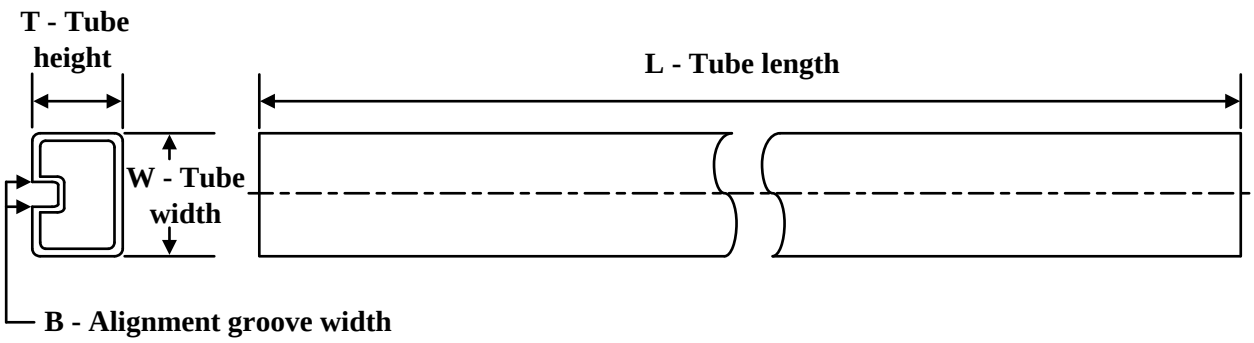

*All dimensions are nominal

Device	Package Name	Package Type	Pins	SPQ	L (mm)	W (mm)	T (µm)	B (mm)
ISO7320CQDQ1	D	SOIC	8	75	505.46	6.76	3810	4
ISO7320CQDQ1.A	D	SOIC	8	75	505.46	6.76	3810	4
ISO7320FCQDQ1	D	SOIC	8	75	505.46	6.76	3810	4
ISO7320FCQDQ1.A	D	SOIC	8	75	505.46	6.76	3810	4
ISO7321CQDQ1	D	SOIC	8	75	505.46	6.76	3810	4
ISO7321CQDQ1.A	D	SOIC	8	75	505.46	6.76	3810	4
ISO7321FCQDQ1	D	SOIC	8	75	505.46	6.76	3810	4
ISO7321FCQDQ1.A	D	SOIC	8	75	505.46	6.76	3810	4

IMPORTANT NOTICE AND DISCLAIMER

TI PROVIDES TECHNICAL AND RELIABILITY DATA (INCLUDING DATASHEETS), DESIGN RESOURCES (INCLUDING REFERENCE DESIGNS), APPLICATION OR OTHER DESIGN ADVICE, WEB TOOLS, SAFETY INFORMATION, AND OTHER RESOURCES “AS IS” AND WITH ALL FAULTS, AND DISCLAIMS ALL WARRANTIES, EXPRESS AND IMPLIED, INCLUDING WITHOUT LIMITATION ANY IMPLIED WARRANTIES OF MERCHANTABILITY, FITNESS FOR A PARTICULAR PURPOSE OR NON-INFRINGEMENT OF THIRD PARTY INTELLECTUAL PROPERTY RIGHTS.

These resources are intended for skilled developers designing with TI products. You are solely responsible for (1) selecting the appropriate TI products for your application, (2) designing, validating and testing your application, and (3) ensuring your application meets applicable standards, and any other safety, security, regulatory or other requirements.

These resources are subject to change without notice. TI grants you permission to use these resources only for development of an application that uses the TI products described in the resource. Other reproduction and display of these resources is prohibited. No license is granted to any other TI intellectual property right or to any third party intellectual property right. TI disclaims responsibility for, and you fully indemnify TI and its representatives against any claims, damages, costs, losses, and liabilities arising out of your use of these resources.

TI’s products are provided subject to TI’s Terms of Sale, TI’s General Quality Guidelines, or other applicable terms available either on ti.com or provided in conjunction with such TI products. TI’s provision of these resources does not expand or otherwise alter TI’s applicable warranties or warranty disclaimers for TI products. Unless TI explicitly designates a product as custom or customer-specified, TI products are standard, catalog, general purpose devices.

TI objects to and rejects any additional or different terms you may propose.

Copyright © 2025, Texas Instruments Incorporated

Last updated 10/2025