CDx4HC4511, CD74HCT4511 BCD-to-7 Segment Latch/Decoder/Drivers

1 Features

- 2-V to 6-V V_{CC} operation ('HC4511)
- 4.5-V to 5.5-V V_{CC} operation (CD74HCT4511)
- High-output sourcing capability
  - 7.5 mA at 4.5 V (CD74HCT4511)
  - 10 mA at 6 V ('HC4511)
- Input latches for BCD code storage
- Lamp test and blanking capability
- Balanced propagation delays and transition times
- Significant power reduction compared to LSTTL logic IC's
- 'HC4511
  - High noise immunity, N_{IL} or N_{IH} = 30% of V_{CC} at V_{CC} = 5 V
- CD74HCT4511
  - Direct LSTTL input logic compatibility, V_{IL} = 0.8 V Maximum, V_{IH} = 2 V minimum
  - CMOS input compatibility, $I_I \leq 1_{\mu A}$ at V_{OL}, V_{OH}

2 Description

The CD54HC4511, CD74HC4511, and CD74HCT4511 are BCD-to-7 segment latch/decoder/drivers with four address inputs (D_0–D_3), an active-low blanking ($\overline{BL}$) input, lamp-test ($\overline{LT}$) input, and a latch-enable ($\overline{LE}$) input that, when high, enables the latches to store the BCD inputs. When $\overline{LE}$ is low, the latches are disabled, making the outputs transparent to the BCD inputs.

Device Information

PART NUMBER	PACKAGE(1)	BODY SIZE (NOM)
CD54HC4511	J (CDIP, 16)	24.38 mm × 6.92 mm
CD74HC4511	N (PDIP, 16)	19.31 mm × 6.35 mm
	D (SOIC, 16)	9.90 mm × 3.90 mm
	PW (TSSOP, 16)	5.00 mm × 4.40 mm
CD74HCT4511	N (PDIP, 16)	19.31 mm × 6.35 mm

(1) For all available packages, see the orderable addendum at the end of the data sheet.

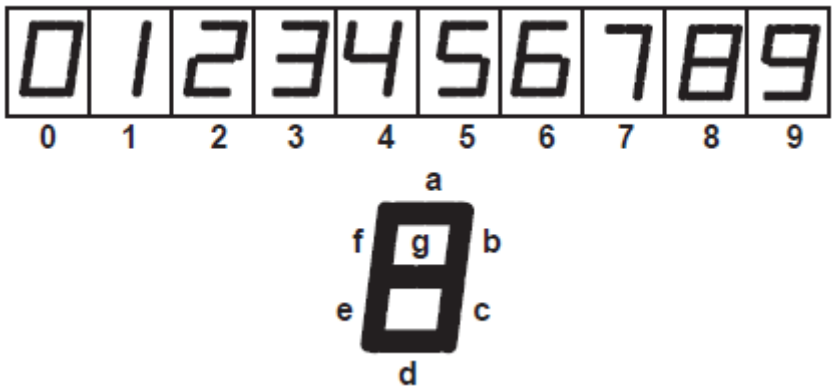

Display

An IMPORTANT NOTICE at the end of this data sheet addresses availability, warranty, changes, use in safety-critical applications, intellectual property matters and other important disclaimers. PRODUCTION DATA.

Table of Contents

1 Features....1
2 Description....1
3 Revision History....2
4 Pin Configuration and Functions....3
5 Specifications....4
5.1 Absolute Maximum Ratings....4
5.2 Recommended Operating Conditions for 'HC4511[(1)]....4
5.3 Recommended Operating Conditions for CD74HCT4511[(1)]....4
5.4 Thermal Information....5
5.5 'HC4511 Electrical Characteristics....5
5.6 CD74HCT4511 Electrical Characteristics....5
5.7 'HC4511 Timing Requirements....6
5.8 Switching Characteristics....6
5.9 CD74HCT4511 Timing Requirements....7
5.10 CD74HCT4511 Switching Characteristics....7
5.11 Operating Characteristics....7
6 Parameter Measurement Information....8
7 Detailed Description....10
7.1 Overview....10
7.2 Functional Block Diagram....10
7.3 Device Functional Modes....10
8 Power Supply Recommendations....11
9 Layout....11
9.1 Layout Guidelines....11
10 Device and Documentation Support....12
10.1 Receiving Notification of Documentation Updates....12
10.2 Support Resources....12
10.3 Trademarks....12
10.4 Electrostatic Discharge Caution....12
10.5 Glossary....12
11 Mechanical, Packaging, and Orderable Information....12
11.1 Tape and Reel Information....13
11.2 Mechanical Data....14

3 Revision History

NOTE: Page numbers for previous revisions may differ from page numbers in the current version.

Changes from Revision D (October 2003) to Revision E (August 2022)	Page
• Updated the numbering, formatting, tables, figures, and cross-references throughout the document to reflect modern data sheet standards	1

Copyright © 2022 Texas Instruments Incorporated

4 Pin Configuration and Functions

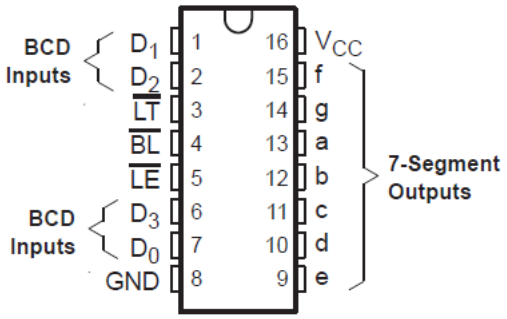

J, N, D, PW package
16-Pin CDIP, PDIP, SOIC, TSSOP
Top View

5 Specifications

5.1 Absolute Maximum Ratings

over operating free-air temperature (unless otherwise noted)[1]

			MIN	MAX	UNIT
V_{CC}	Supply voltage		– 0.5	7	V
I_{IK}	Input diode current	V_I < – 0.5 V or V_I > V_{CC} + 0.5 V [1]		±20	mA
I_{OK}	Output diode current	V_O < – 0.5 V or V_O > V_{CC} + 0.5 V [1]		±20	mA
I_O	Output source or sink current per output pin	V_O = 0 to V_{CC}		±25	mA
	Continuous current through V_{CC} or GND			±50	mA
T_J	Junction temperature			150	°C
T_{stg}	Storage temperature range		– 65	150	°C
	Lead temperature (During Soldering)	At distance 1/16 ± 1/32 in (1.59 ± 0.79 mm) from case for 10 s maximum		265	°C
		Unit inserted into a PC board (minimum thickness 1/16 in, 1.59 mm) (with solder contacting lead tips only)		300	°C

(1) Stresses beyond those listed under “absolute maximum ratings” may cause permanent damage to the device. These are stress ratings only, and functional operation of the device at these or any other conditions beyond those indicated under “recommended operating conditions” is not implied. Exposure to absolute-maximum-rated conditions for extended periods may affect device reliability

5.2 Recommended Operating Conditions for 'HC4511[1]

			T_A = 25°C		T_A = – 55°C to 125°C		T_A = – 40°C to 85°C		UNIT
			MIN	NOM	MAX	MIN	NOM	MAX	
V_{CC}	Supply voltage		2	6	2	6	2	6	V
V_{IH}	High-level input voltage	V_{CC} = 2 V	1.5		1.5		1.5		V
		V_{CC} = 4.5 V	3.15		3.15		3.15		
		V_{CC} = 6 V	4.2		4.2		4.2		
V_{IL}	Low-level input voltage	V_{CC} = 2 V		0.5		0.5		0.5	V
		V_{CC} = 4.5 V		1.35		1.35		1.35	
		V_{CC} = 6 V		1.8		1.8		1.8	
V_I	Input voltage		0	V_{CC}	0	V_{CC}	0	V_{CC}	V
V_O	Output voltage		0	V_{CC}	0	V_{CC}	0	V_{CC}	V
t_t	Input transition rise/fall time	V_{CC} = 2 V		1000		1000		1000	ns
		V_{CC} = 4.5 V		500		500		500	
		V_{CC} = 6 V		400		400		400	

(1) All unused inputs of the device must be held at V_{CC} or GND to ensure proper device operation. Refer to the TI application report Implications of Slow or Floating SMOS Inputs, literature number SCBA004.

5.3 Recommended Operating Conditions for CD74HCT4511[1]

		T_A = – 55°C to 125°C		T_A = – 55°C to 125°C		T_A = – 40°C to 85°C		UNIT
		MIN	MAX	MIN	MAX	MIN	MAX	
V_{CC}	Supply Voltage	4.5	5.5	4.5	5.5	4.5	5.5	V
V_{IH}	High-level input voltage	2		2		2		V
V_{IL}	Low-level input voltage		0.8		0.8		0.8	
V_I	Input voltage		V_{CC}		V_{CC}		V_{CC}	V
V_O	Output voltage		V_{CC}		V_{CC}		V_{CC}	V

Copyright © 2022 Texas Instruments Incorporated

5.3 Recommended Operating Conditions for CD74HCT4511[(1)] (continued)

		T_A = – 55°C to 125°C		T_A = – 55°C to 125°C		T_A = – 40°C to 85°C		UNIT
		MIN	MAX	MIN	MAX	MIN	MAX	
t_t	Input transition (rise and fall) time		500		500		500	ns

(1) All unused inputs of the device must be held at V_{CC} or GND to ensure proper device operation. Refer to the TI application report Implications of Slow or Floating SMOS Inputs, literature number SCBA004.

5.4 Thermal Information

THERMAL METRIC[(1)]		D (SOIC) 16 PINS	N (PDIP) 16 PINS	PW (TSSOP) 16 PINS	UNIT
$R_{\theta JA}$	Package thermal impedance	67	73	108	°C/W

(1) For more information about traditional and new thermal metrics, see the *Semiconductor and IC package thermal metrics* application report.

5.5 'HC4511 Electrical Characteristics

over recommended operating free-air temperature range (unless otherwise noted)

PARAMETER		TEST CONDITIONS		V_{CC}	T_A = 25°C		T_A = – 55°C to 125°C		T_A = – 40°C to 85°C		UNIT
					MIN	MAX	MIN	MAX	MIN	MAX	
V_{OH}	High level output voltage	$V_I = V_{IH}$ or V_{IL}	I_{OH} = −20 µA	2 V	1.9		1.9		1.9		V
				4.5 V	4.4		4.4		4.4		
				6 V	5.9		5.9		5.9		
			I_{OH} = −4 mA	4.5 V	3.98		3.7		3.84		
			I_{OH} = −5.2 mA	6 V	5.48		5.2		5.34		
V_{OL}	Low level output voltage	$V_I = V_{IH}$ or V_{IL}	I_{OL} = 20 µA	2 V		0.1		0.1		0.1	V
				4.5 V		0.1		0.1		0.1	
				6 V		0.1		0.1		0.1	
			I_{OL} = 4 mA	4.5 V		0.26		0.4		0.33	
			I_{OL} = 5.2 mA	6 V		0.26		0.4		0.33	
I_I	Input leakage current V	$V_I = V_{CC}$ or 0		6 V		±0.1		±1		±1	µA
I_{CC}	Supply current	$V_I = V_{CC}$ or 0,	I_O = 0	6 V		8		160		80	µA
C_i	Input Capacitance			2 V to 6 V		10		10		10	pF

5.6 CD74HCT4511 Electrical Characteristics

over recommended operating free-air temperature range (unless otherwise noted)

PARAMETER		TEST CONDITIONS		V_{CC}	T_A = 25°C			T_A = −55°C to 125°C		T_A= – 40°C to 85°C		UNIT
					MIN	TYP	MAX	MIN	MAX	MIN	MAX	
V_{OH}	High level output voltage	$V_I = V_{IH}$ or V_{IL}	I_{OH} = −20 µA	4.5 V	4.4			4.4		4.4		V
			I_{OH} = −4 mA		3.98			3.7		3.84		
V_{OL}	Low level output voltage	$V_I = V_{IH}$ or V_{IL}	I_{OL} = 20 µA	4.5 V			0.1		0.1		0.1	
			I_{OL} = 4 mA				0.26		0.4		0.33	
I_I	Input leakage current V	$V_I = V_{CC}$ to GND		5.5 V			±0.1		±1		±1	µA
I_{CC}	Supply current	$V_I = V_{CC}$ or 0,	I_O = 0	5.5 V			8		160		80	µA
ΔI_{CC} [(1)]	Supply-Current Change	$\overline{LT}$, $\overline{LE}$ inputs held at V_{CC} – 2.1 V		4.5 V to 5.5 V		100	540		735		675	µA
		$\overline{BL}$, Dn inputs held at V_{CC} – 2.1 V				100	108		147		135	

Copyright © 2022 Texas Instruments Incorporated

5.6 CD74HCT4511 Electrical Characteristics (continued)

over recommended operating free-air temperature range (unless otherwise noted)

PARAMETER		TEST CONDITIONS	V_{CC}	T_A = 25°C			T_A = −55°C to 125°C		T_A= – 40°C to 85°C		UNIT
				MIN	TYP	MAX	MIN	MAX	MIN	MAX	
C_i	Input Capacitance					10		10		10	pF

(1) Additional supply current per input pin, TTL inputs high, 1 unit load. For dual-supply systems, theoretical worst-case (V_I = 2.4 V, V_{CC} = 5.5 V) specification is 1.8 mA.

5.7 'HC4511 Timing Requirements

		V_{CC}	T_A = 25°C		T_A = – 55°C to 125°C		T_A = – 40°C to 85°C		UNIT
			MIN	MAX	MIN	MAX	MIN	MAX	
t_W	Pulse duration, $\overline{LE}$ low	2 V	80		120		100		ns
		4.5 V	16		24		20		
		6 V	14		20		17		
t_{su}	Setup time, BCD inputs before $\overline{LE}$↑	2 V	60		90		75		ns
		4.5 V	12		18		15		
		6 V	10		15		13		
t_h	Hold time, BCD inputs before $\overline{LE}$↑	2 V	3		3		3		ns
		4.5 V	3		3		3		
		6 V	3		3		3		

5.8 Switching Characteristics

PARAMETER	FROM (INPUT)	TO (OUTPUT)	LOAD CAPACITANCE	V_{CC}	T_A = 25°C			T_A = – 55°C TO 125°C		T_A = – 40°C TO 85°C		UNIT
					MIN	TYP	MAX	MIN	MAX	MIN	MAX	
t_{pd}	D_n	Output	C_L = 50 pF	2 V			300		450		375	ns
				4.5 V			60		90		75	
				6 V			51		77		64	
			C_L = 15 pF	5 V		25						
	$\overline{LE}$	Output	C_L = 50 pF	2 V			270		405		340	
				4.5 V			54		81		68	
				6 V			46		69		58	
			C_L = 15 pF	5 V		23						
	$\overline{BL}$	Output	C_L = 50 pF	2 V			220		330		275	
				4.5 V			44		66		55	
				6 V			37		56		47	
			C_L = 15 pF	5 V		18						
	$\overline{LT}$	Output	C_L = 50 pF	2 V			160		240		200	
				4.5 V			32		48		40	
				6 V			27		41		34	
			C_L = 15 pF	5 V		13						
t_t		Any	C_L = 50 pF	2 V			75		110		95	ns
				4.5 V			15		22		19	
				6 V			13		19		16	

Copyright © 2022 Texas Instruments Incorporated

5.9 CD74HCT4511 Timing Requirements

		T_A = 25°C		T_A = – 55°C TO 125 °C		T_A = – 40°C TO 85°C		UNIT
		MIN	MAX	MIN	MAX	MIN	MAX	
t_w	Pulse duration, $\overline{LE}$ low	16		24		20		ns
t_{su}	Setup time, BCD inputs before $\overline{LE}$↑	16		24		20		ns
t_h	Hold time, BCD inputs before $\overline{LE}$↑	5		5		5		ns

over operating free-air temperature range (unless otherwise noted)

5.10 CD74HCT4511 Switching Characteristics

PARAMETER	FROM (INPUT)	TO (OUTPUT)	LOAD CAPACITANCE	V_{CC}	T_A = 25°C			T_A = – 55°C to 125°C		T_A = – 40°C to 85°C		UNIT
					MIN	TYP	MAX	MIN	MAX	MIN	MAX	
t_{pd}	D_n	Output	C_L = 50 pF	4.5 V			60		90		75	ns
			C_L = 15 pF	5 V		25						
	$\overline{LE}$	Output	C_L = 50 pF	4.5 V			54		81		68	
			C_L = 15 pF	5 V		23						
	$\overline{BL}$	Output	C_L = 50 pF	4.5 V			44		66		55	
			C_L = 15 pF	5 V		18						
	$\overline{LT}$	Output	C_L = 50 pF	4.5 V			33		50		41	
			C_L = 15 pF	5 V		13						
t_t		Any	C_L = 50 pF	4.5 V			15		22		19	ns

5.11 Operating Characteristics

PARAMETER[(1)]			TYP	UNIT
C_{pd}	Power dissipation capacitance	'HC4511	114	pF
		CD74HCT4511	110	

(1) C_{pd} is used to determine the dynamic power consumption, per package.
$P_D = C_{pd}V_{CC}{}^2 f_i + \Sigma C_L V_{CC}{}^2 f_o$ where:
f_i = input frequency
f_o = output frequency
C_L = output load capacitance
V_{CC} = supply voltage

6 Parameter Measurement Information

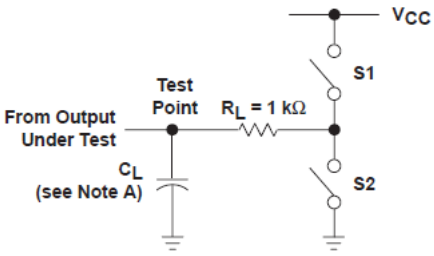

LOAD CIRCUIT

PARAMETER		S1	S2
t_{en}	t_{PZH}	Open	Closed
	t_{PZL}	Closed	Open
t_{dis}	t_{PHZ}	Open	Closed
	t_{PLZ}	Closed	Open
t_{pd} or t_t		Open	Open

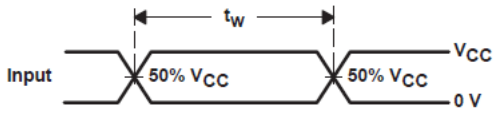

VOLTAGE WAVEFORMS
PULSE DURATION

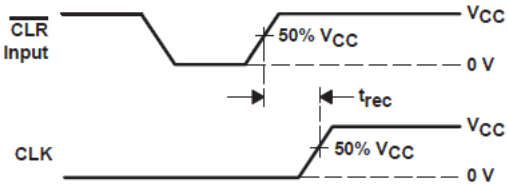

VOLTAGE WAVEFORMS
RECOVERY TIME

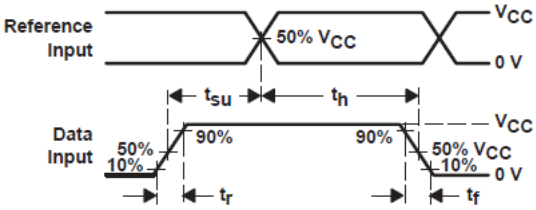

VOLTAGE WAVEFORMS
SETUP AND HOLD AND INPUT RISE AND FALL TIMES

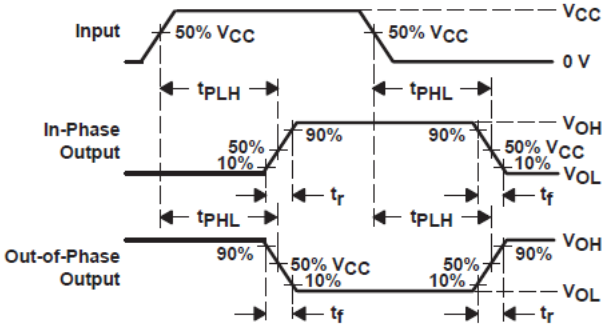

VOLTAGE WAVEFORMS
PROPAGATION DELAY AND OUTPUT TRANSITION TIMES

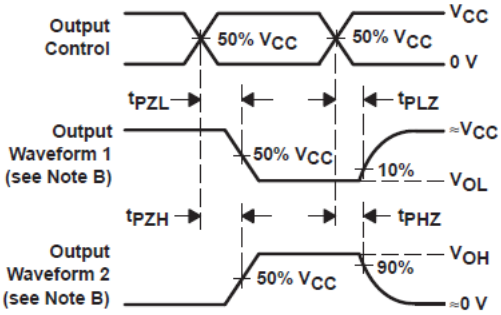

VOLTAGE WAVEFORMS
OUTPUT ENABLE AND DISABLE TIMES

NOTES:
A. C_L includes probe and test-fixture capacitance.
B. Waveform 1 is for an output with internal conditions such that the output is low except when disabled by the output control. Waveform 2 is for an output with internal conditions such that the output is high except when disabled by the output control.
C. Phase relationships between waveforms were chosen arbitrarily. All input pulses are supplied by generators having the following characteristics: PRR ≤ 1 MHz, Z_O = 50 Ω, t_r = 6 ns, t_f = 6 ns.
D. For clock inputs, f_{max} is measured with the input duty cycle at 50%.
E. The outputs are measured one at a time with one input transition per measurement.
F. t_{PLZ} and t_{PHZ} are the same as t_{dis}.
G. t_{PZL} and t_{PZH} are the same as t_{en}.
H. t_{PLH} and t_{PHL} are the same as t_{pd}.

Figure 6-1. 'HC4511

Copyright © 2022 Texas Instruments Incorporated

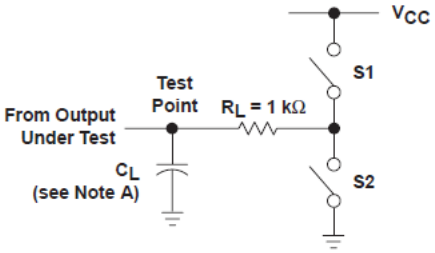

LOAD CIRCUIT

PARAMETER		S1	S2
t_{en}	t_{PZH}	Open	Closed
	t_{PZL}	Closed	Open
t_{dis}	t_{PHZ}	Open	Closed
	t_{PLZ}	Closed	Open
t_{pd} or t_t		Open	Open

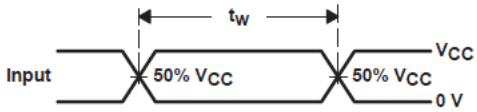

VOLTAGE WAVEFORMS
PULSE DURATION

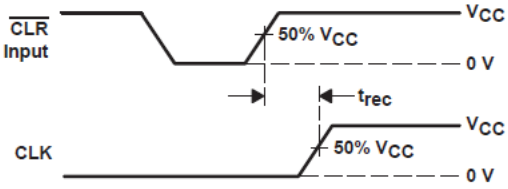

VOLTAGE WAVEFORMS
RECOVERY TIME

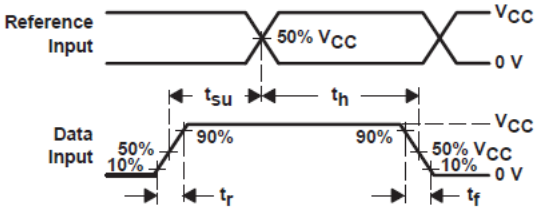

VOLTAGE WAVEFORMS
SETUP AND HOLD AND INPUT RISE AND FALL TIMES

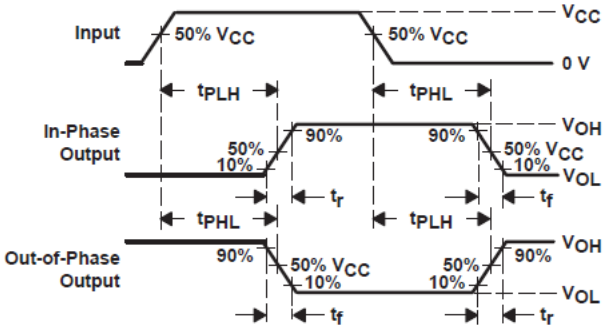

VOLTAGE WAVEFORMS
PROPAGATION DELAY AND OUTPUT TRANSITION TIMES

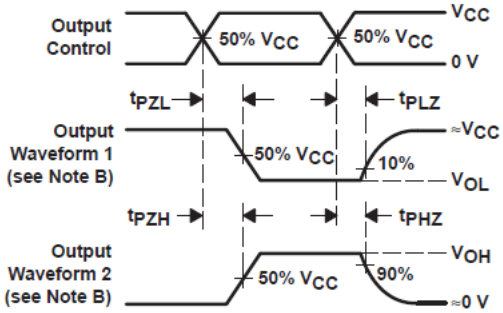

VOLTAGE WAVEFORMS
OUTPUT ENABLE AND DISABLE TIMES

NOTES:
A. C_L includes probe and test-fixture capacitance.
B. Waveform 1 is for an output with internal conditions such that the output is low except when disabled by the output control. Waveform 2 is for an output with internal conditions such that the output is high except when disabled by the output control.
C. Phase relationships between waveforms were chosen arbitrarily. All input pulses are supplied by generators having the following characteristics: PRR ≤ 1 MHz, Z_O = 50 Ω, t_r = 6 ns, t_f = 6 ns.
D. For clock inputs, f_{max} is measured with the input duty cycle at 50%.
E. The outputs are measured one at a time with one input transition per measurement.
F. t_{PLZ} and t_{PHZ} are the same as t_{dis}.
G. t_{PZL} and t_{PZH} are the same as t_{en}.
H. t_{PLH} and t_{PHL} are the same as t_{pd}.

Figure 6-2. CD74HCT4511

7 Detailed Description

7.1 Overview

The CD54HC4511, CD74HC4511, and CD74HCT4511 are BCD-to-7 segment latch/decoder/drivers with four address inputs (D_0–D_3), an active-low blanking ($\overline{BL}$) input, lamp-test ($\overline{LT}$) input, and a latch-enable ($\overline{LE}$) input that, when high, enables the latches to store the BCD inputs. When $\overline{LE}$ is low, the latches are disabled, making the outputs transparent to the BCD inputs.

These devices have standard-size output transistors, but are capable of sourcing (at standard V_{OH} levels) up to 7.5 mA at 4.5 V. The HC types can supply up to 10 mA at 6 V.

7.2 Functional Block Diagram

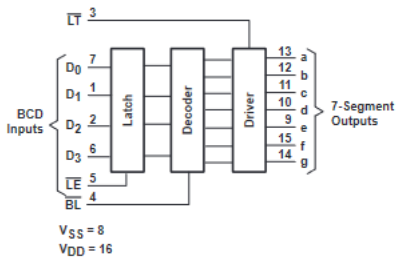

Figure 7-1. Function Diagram

7.3 Device Functional Modes

Table 7-1. Function Table

INPUTS(1)							OUTPUTS(2)							
$\overline{LE}$	$\overline{BL}$	$\overline{LT}$	D_3	D_2	D_1	D_0	a	b	c	d	e	f	g	DISPLAY
X	X	L	X	X	X	X	H	H	H	H	H	H	H	8
X	L	H	X	X	X	X	L	L	L	L	L	L	L	Blank
L	H	H	L	L	L	L	H	H	H	H	H	H	L	0
L	H	H	L	L	L	H	L	H	H	L	L	L	L	1
L	H	H	L	L	H	L	H	H	L	H	H	L	H	2
L	H	H	L	L	H	H	H	H	H	H	L	L	H	3
L	H	H	L	H	L	L	L	H	H	L	L	H	H	4
L	H	H	L	H	L	H	H	L	H	H	L	H	H	5
L	H	H	L	H	H	L	L	L	H	H	H	H	H	6
L	H	H	L	H	H	H	H	H	H	L	L	L	L	7
L	H	H	H	L	L	L	H	H	H	H	H	H	H	8
L	H	H	H	L	L	H	H	H	H	L	L	H	H	9
L	H	H	H	L	H	L	L	L	L	L	L	L	L	Blank
L	H	H	H	L	H	H	L	L	L	L	L	L	L	Blank
L	H	H	H	H	L	L	L	L	L	L	L	L	L	Blank
L	H	H	H	H	L	H	L	L	L	L	L	L	L	Blank
L	H	H	H	H	H	L	L	L	L	L	L	L	L	Blank
L	H	H	H	H	H	H	L	L	L	L	L	L	L	Blank
H	H	H	X	X	X	X	t	t	t	t	t	t	t	t

(1) H = High Voltage Level, L = Low Voltage Level, X = Don't caret = Depends on BCD code previously applied when $\overline{LE}$ = LNOTE: Display is blank for all illegal input codes (BCD > HLLH).
(2) H = Driving High, L = Driving Low, Z = High Impedance State

Copyright © 2022 Texas Instruments Incorporated

8 Power Supply Recommendations

The power supply can be any voltage between the minimum and maximum supply voltage rating located in the *Recommended Operating Conditions*. Each V_{CC} terminal should have a good bypass capacitor to prevent power disturbance. A 0.1-µF capacitor is recommended for this device. It is acceptable to parallel multiple bypass caps to reject different frequencies of noise. The 0.1-µF and 1-µF capacitors are commonly used in parallel. The bypass capacitor should be installed as close to the power terminal as possible for best results.

9 Layout

9.1 Layout Guidelines

When using multiple-input and multiple-channel logic devices inputs must not ever be left floating. In many cases, functions or parts of functions of digital logic devices are unused; for example, when only two inputs of a triple-input AND gate are used or only 3 of the 4 buffer gates are used. Such unused input pins must not be left unconnected because the undefined voltages at the outside connections result in undefined operational states. All unused inputs of digital logic devices must be connected to a logic high or logic low voltage, as defined by the input voltage specifications, to prevent them from floating. The logic level that must be applied to any particular unused input depends on the function of the device. Generally, the inputs are tied to GND or V_{CC}, whichever makes more sense for the logic function or is more convenient.

Copyright © 2022 Texas Instruments Incorporated

10 Device and Documentation Support

TI offers an extensive line of development tools. Tools and software to evaluate the performance of the device, generate code, and develop solutions are listed below.

10.1 Receiving Notification of Documentation Updates

To receive notification of documentation updates, navigate to the device product folder on ti.com. Click on *Subscribe to updates* to register and receive a weekly digest of any product information that has changed. For change details, review the revision history included in any revised document.

10.2 Support Resources

TI E2E™ support forums are an engineer's go-to source for fast, verified answers and design help — straight from the experts. Search existing answers or ask your own question to get the quick design help you need.

Linked content is provided "AS IS" by the respective contributors. They do not constitute TI specifications and do not necessarily reflect TI's views; see TI's Terms of Use.

10.3 Trademarks

TI E2E™ is a trademark of Texas Instruments.
All trademarks are the property of their respective owners.

10.4 Electrostatic Discharge Caution

This integrated circuit can be damaged by ESD. Texas Instruments recommends that all integrated circuits be handled with appropriate precautions. Failure to observe proper handling and installation procedures can cause damage.

ESD damage can range from subtle performance degradation to complete device failure. Precision integrated circuits may be more susceptible to damage because very small parametric changes could cause the device not to meet its published specifications.

10.5 Glossary

TI Glossary	This glossary lists and explains terms, acronyms, and definitions.

11 Mechanical, Packaging, and Orderable Information

The following pages include mechanical, packaging, and orderable information. This information is the most current data available for the designated devices. This data is subject to change without notice and revision of this document. For browser-based versions of this data sheet, refer to the left-hand navigation.

Copyright © 2022 Texas Instruments Incorporated

11.1 Tape and Reel Information

REEL DIMENSIONS

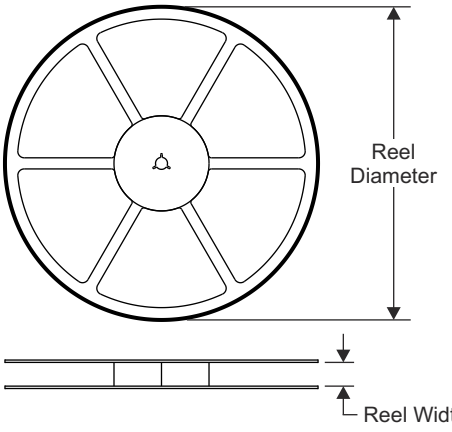

TAPE DIMENSIONS

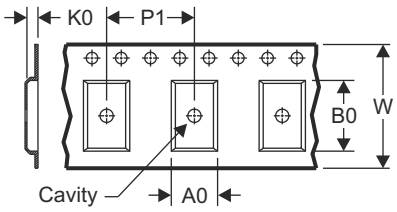

A0	Dimension designed to accommodate the component width
B0	Dimension designed to accommodate the component length
K0	Dimension designed to accommodate the component thickness
W	Overall width of the carrier tape
P1	Pitch between successive cavity centers

QUADRANT ASSIGNMENTS FOR PIN 1 ORIENTATION IN TAPE

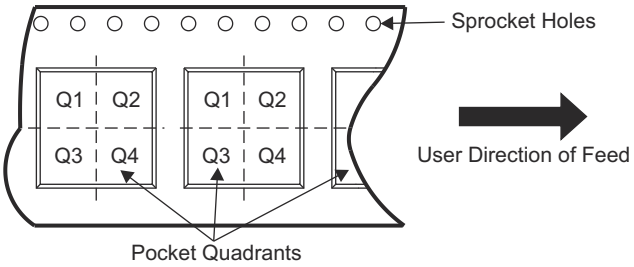

Device	Package Type	Package Drawing	Pins	SPQ	Reel Diameter (mm)	Reel Width W1 (mm)	A0 (mm)	B0 (mm)	K0 (mm)	P1 (mm)	W (mm)	Pin1 Quadrant
PTAS6584QDKQQ1	HTQFP	PHD	64	1000	330.0	24.4	17.0	17.0	1.5	20.0	24.0	Q2

TAPE AND REEL BOX DIMENSIONS

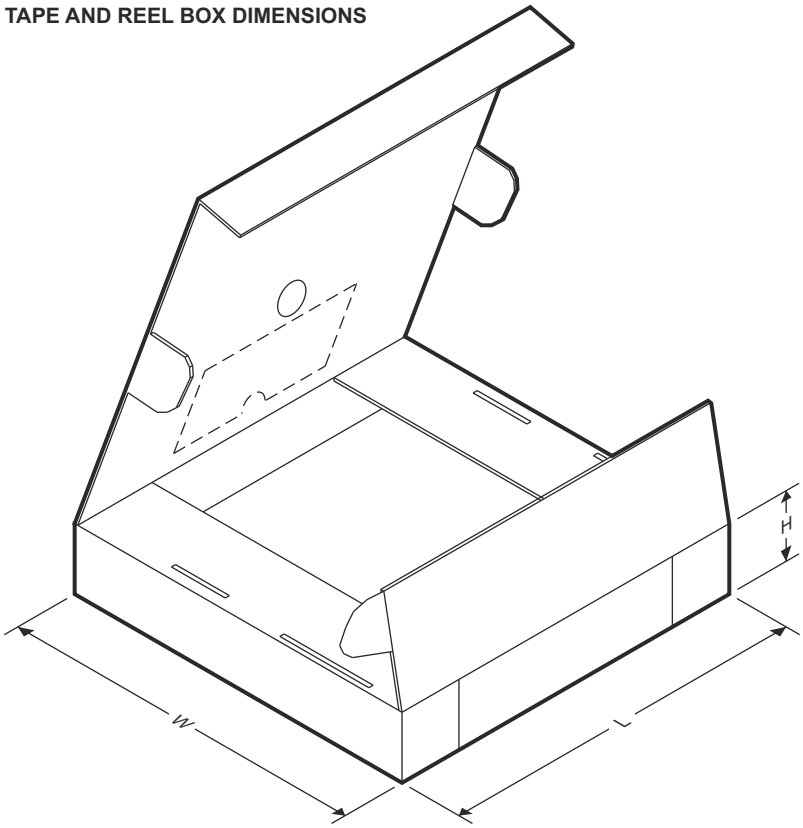

Device	Package Type	Package Drawing	Pins	SPQ	Length (mm)	Width (mm)	Height (mm)
PTAS6584QPHDRQ1	HTQFP	PHD	64	1000	350.0	350.0	43.0

11.2 Mechanical Data

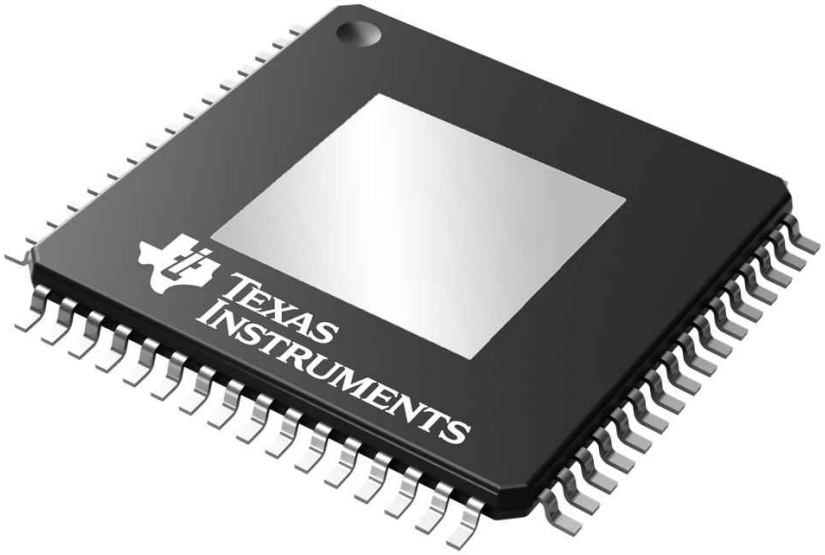

Copyright © 2022 Texas Instruments Incorporated

PACKAGE OUTLINE

PHD0064B

HTQFP - 1.2 mm max height

PLASTIC QUAD FLATPACK

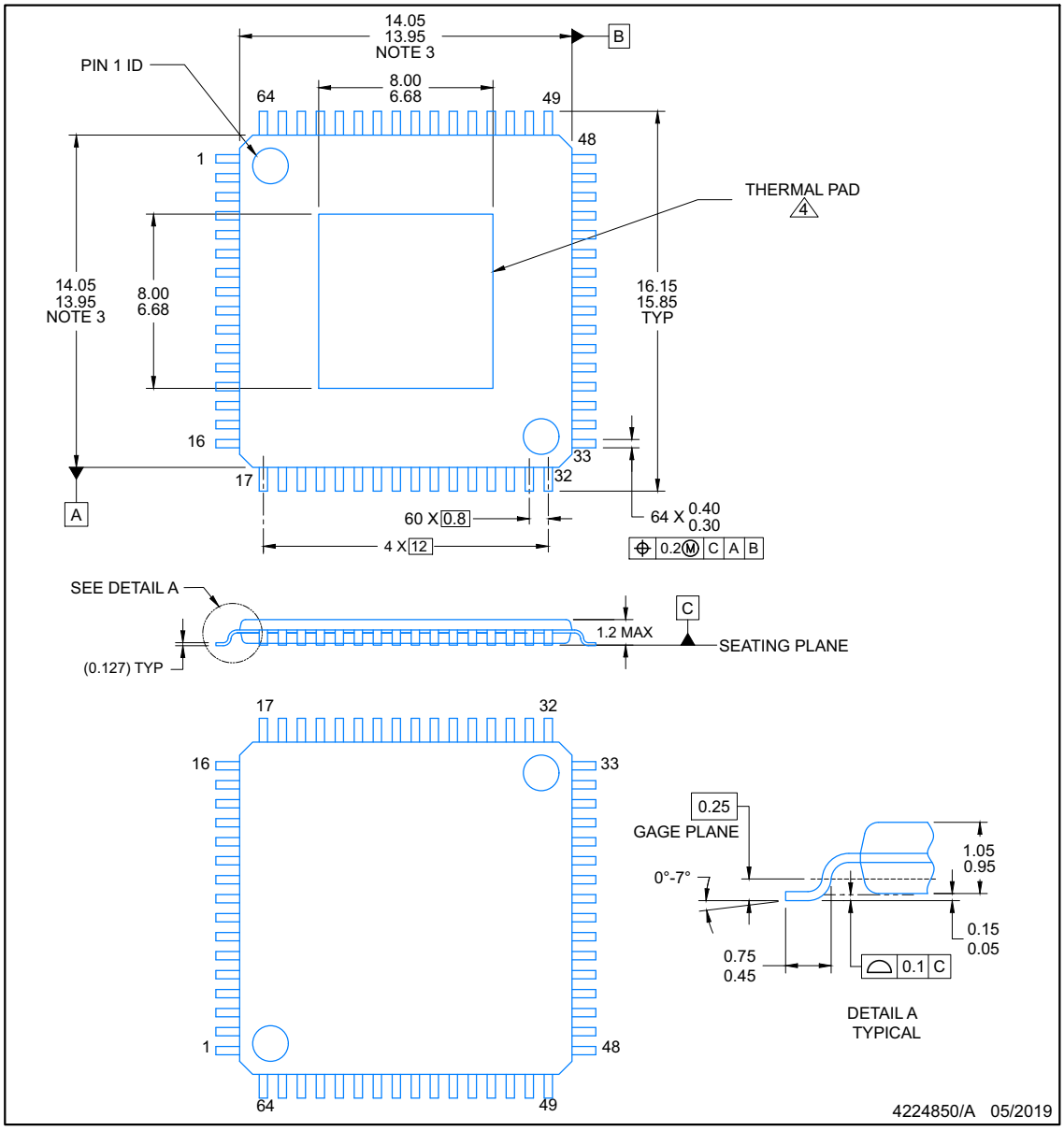

NOTES:

1. All linear dimensions are in millimeters. Any dimensions in parenthesis are for reference only. Dimensioning and tolerancing per ASME Y14.5M.
2. This drawing is subject to change without notice.
3. This dimension does not include mold flash, protrusions, or gate burrs. Mold flash, protrusions, or gate burrs shall not exceed 0.15 per side.
4. See technical brief. PowerPad Thermally Enhanced Package, Texas Instruments Literature No. SLMA002 (www.ti.com/lit/slma002) and SLMA004 (www.ti.com/lit/slma004) for information regarding recommended board layout.

Copyright © 2022 Texas Instruments Incorporated

EXAMPLE BOARD LAYOUT

PHD0064B — **HTQFP - 1.2 mm max height**

PLASTIC QUAD FLATPACK

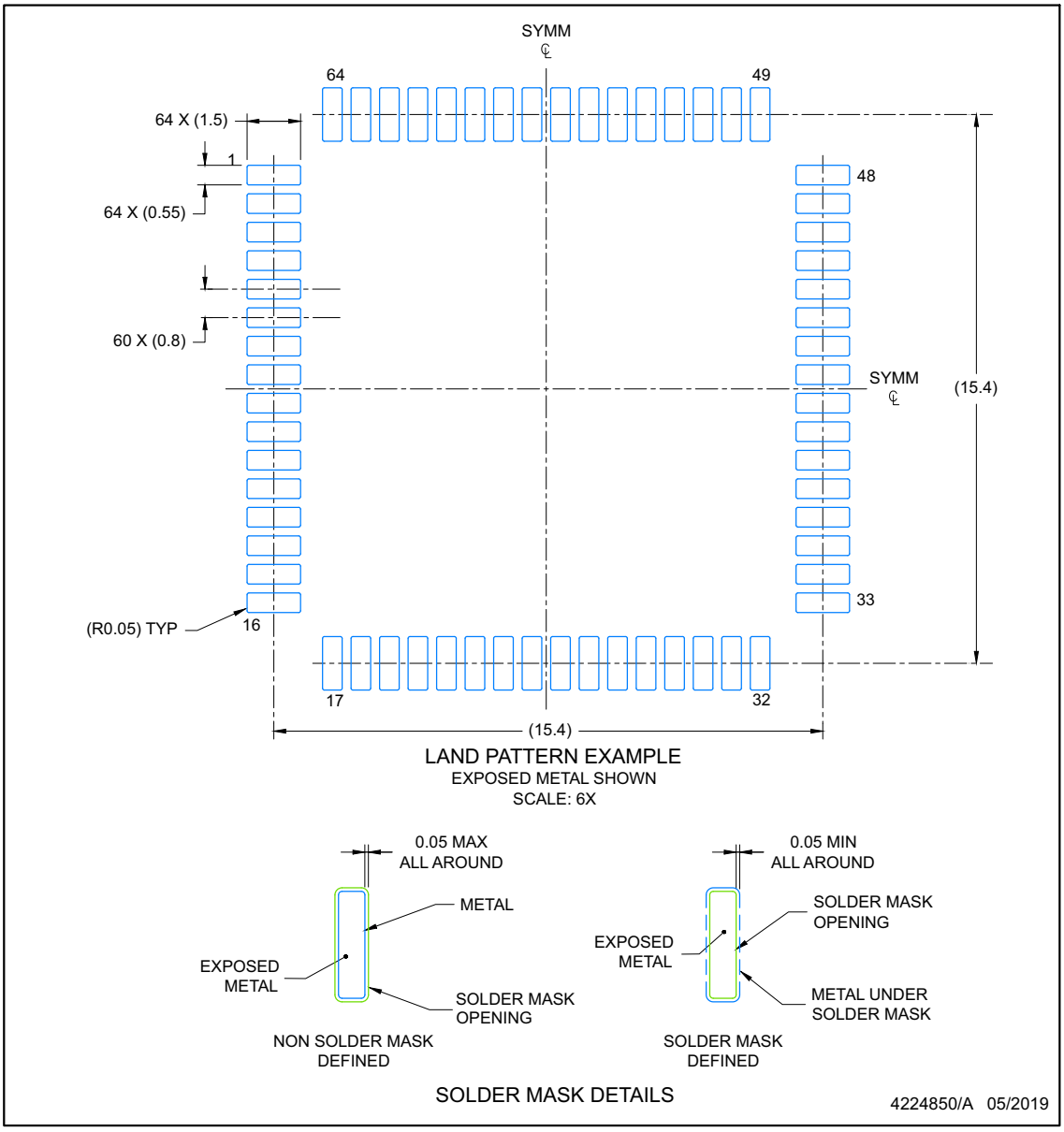

NOTES: (continued)

5. Publication IPC-7351 may have alternate designs.
6. Solder mask tolerances between and around signal pads can vary based on board fabrication site.
7. Vias are optional depending on application, refer to device data sheet. It is recommended that vias under paste be filled, plugged or tented.

Copyright © 2022 Texas Instruments Incorporated

EXAMPLE STENCIL DESIGN

PHD0064B **HTQFP - 1.2 mm max height**

PLASTIC QUAD FLATPACK

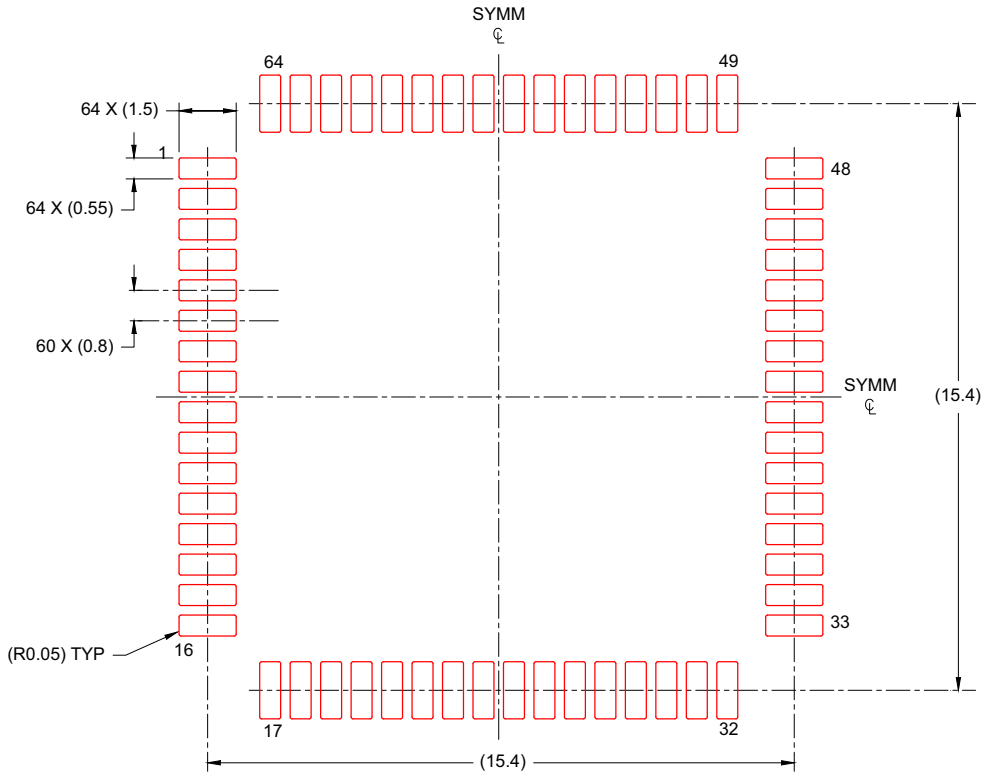

SOLDER PASTE EXAMPLE
SCALE: 6X

4224850/A 05/2019

NOTES: (continued)

7. Laser cutting apertures with trapezoidal walls and rounded corners may offer better paste release. IPC-7525 may have alternate design recommendations.
8. Board assembly site may have different recommendations for stencil design.

Copyright © 2022 Texas Instruments Incorporated

PACKAGING INFORMATION

Orderable part number	Status (1)	Material type (2)	Package | Pins	Package qty | Carrier	RoHS (3)	Lead finish/ Ball material (4)	MSL rating/ Peak reflow (5)	Op temp (°C)	Part marking (6)
5962-8773301EA	Active	Production	CDIP (J) | 16	25 | TUBE	No	SNPB	N/A for Pkg Type	-55 to 125	5962-8773301EA CD54HC4511F3A
CD54HC4511F3A	Active	Production	CDIP (J) | 16	25 | TUBE	No	SNPB	N/A for Pkg Type	-55 to 125	5962-8773301EA CD54HC4511F3A
CD54HC4511F3A.A	Active	Production	CDIP (J) | 16	25 | TUBE	No	SNPB	N/A for Pkg Type	-55 to 125	5962-8773301EA CD54HC4511F3A
CD74HC4511E	Active	Production	PDIP (N) | 16	25 | TUBE	Yes	NIPDAU	N/A for Pkg Type	-55 to 125	CD74HC4511E
CD74HC4511E.A	Active	Production	PDIP (N) | 16	25 | TUBE	Yes	NIPDAU	N/A for Pkg Type	-55 to 125	CD74HC4511E
CD74HC4511EE4	Active	Production	PDIP (N) | 16	25 | TUBE	Yes	NIPDAU	N/A for Pkg Type	-55 to 125	CD74HC4511E
CD74HC4511M	Obsolete	Production	SOIC (D) | 16	-	-	Call TI	Call TI	-55 to 125	HC4511M
CD74HC4511M96	Active	Production	SOIC (D) | 16	2500 | LARGE T&R	Yes	NIPDAU | SN	Level-1-260C-UNLIM	-55 to 125	HC4511M
CD74HC4511M96.A	Active	Production	SOIC (D) | 16	2500 | LARGE T&R	Yes	NIPDAU	Level-1-260C-UNLIM	-55 to 125	HC4511M
CD74HC4511M96G4.A	Active	Production	SOIC (D) | 16	2500 | LARGE T&R	Yes	NIPDAU	Level-1-260C-UNLIM	-55 to 125	HC4511M
CD74HC4511PWR	Active	Production	TSSOP (PW) | 16	2000 | LARGE T&R	Yes	NIPDAU	Level-1-260C-UNLIM	-55 to 125	HJ4511
CD74HC4511PWR.A	Active	Production	TSSOP (PW) | 16	2000 | LARGE T&R	Yes	NIPDAU	Level-1-260C-UNLIM	-55 to 125	HJ4511
CD74HC4511PWRE4	Active	Production	TSSOP (PW) | 16	2000 | LARGE T&R	Yes	NIPDAU	Level-1-260C-UNLIM	-55 to 125	HJ4511
CD74HC4511PWRG4	Active	Production	TSSOP (PW) | 16	2000 | LARGE T&R	Yes	NIPDAU	Level-1-260C-UNLIM	-55 to 125	HJ4511
CD74HC4511PWT	Obsolete	Production	TSSOP (PW) | 16	-	-	Call TI	Call TI	-55 to 125	HJ4511
CD74HCT4511E	Active	Production	PDIP (N) | 16	25 | TUBE	Yes	NIPDAU	N/A for Pkg Type	-55 to 125	CD74HCT4511E
CD74HCT4511E.A	Active	Production	PDIP (N) | 16	25 | TUBE	Yes	NIPDAU	N/A for Pkg Type	-55 to 125	CD74HCT4511E

(1) **Status:** For more details on status, see our product life cycle.

(2) **Material type:** When designated, preproduction parts are prototypes/experimental devices, and are not yet approved or released for full production. Testing and final process, including without limitation quality assurance, reliability performance testing, and/or process qualification, may not yet be complete, and this item is subject to further changes or possible discontinuation. If available for ordering, purchases will be subject to an additional waiver at checkout, and are intended for early internal evaluation purposes only. These items are sold without warranties of any kind.

(3) **RoHS values:** Yes, No, RoHS Exempt. See the TI RoHS Statement for additional information and value definition.

(4) **Lead finish/Ball material:** Parts may have multiple material finish options. Finish options are separated by a vertical ruled line. Lead finish/Ball material values may wrap to two lines if the finish value exceeds the maximum column width.

(5) **MSL rating/Peak reflow:** The moisture sensitivity level ratings and peak solder (reflow) temperatures. In the event that a part has multiple moisture sensitivity ratings, only the lowest level per JEDEC standards is shown. Refer to the shipping label for the actual reflow temperature that will be used to mount the part to the printed circuit board.

(6) **Part marking:** There may be an additional marking, which relates to the logo, the lot trace code information, or the environmental category of the part.

Multiple part markings will be inside parentheses. Only one part marking contained in parentheses and separated by a "~" will appear on a part. If a line is indented then it is a continuation of the previous line and the two combined represent the entire part marking for that device.

Important Information and Disclaimer: The information provided on this page represents TI's knowledge and belief as of the date that it is provided. TI bases its knowledge and belief on information provided by third parties, and makes no representation or warranty as to the accuracy of such information. Efforts are underway to better integrate information from third parties. TI has taken and continues to take reasonable steps to provide representative and accurate information but may not have conducted destructive testing or chemical analysis on incoming materials and chemicals. TI and TI suppliers consider certain information to be proprietary, and thus CAS numbers and other limited information may not be available for release.

In no event shall TI's liability arising out of such information exceed the total purchase price of the TI part(s) at issue in this document sold by TI to Customer on an annual basis.

OTHER QUALIFIED VERSIONS OF CD54HC4511, CD74HC4511 :

- Catalog : CD74HC4511
- Military : CD54HC4511

NOTE: Qualified Version Definitions:

- Catalog - TI's standard catalog product
- Military - QML certified for Military and Defense Applications

TAPE AND REEL INFORMATION

REEL DIMENSIONS

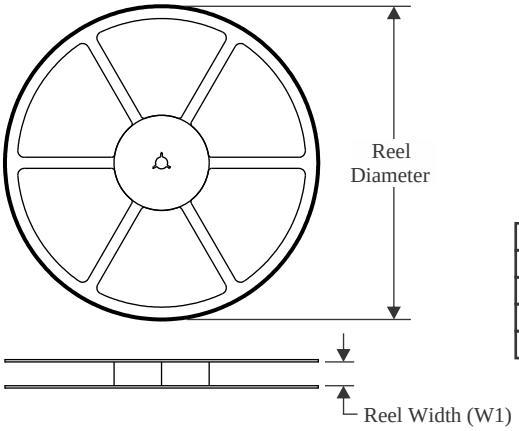

TAPE DIMENSIONS

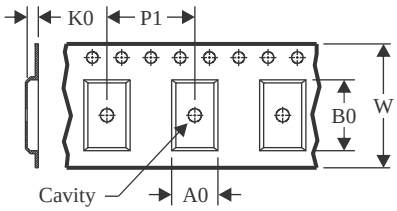

A0	Dimension designed to accommodate the component width
B0	Dimension designed to accommodate the component length
K0	Dimension designed to accommodate the component thickness
W	Overall width of the carrier tape
P1	Pitch between successive cavity centers

QUADRANT ASSIGNMENTS FOR PIN 1 ORIENTATION IN TAPE

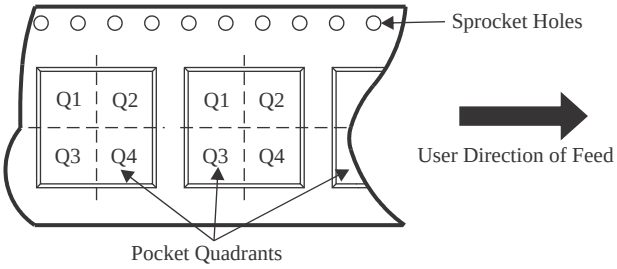

*All dimensions are nominal

Device	Package Type	Package Drawing	Pins	SPQ	Reel Diameter (mm)	Reel Width W1 (mm)	A0 (mm)	B0 (mm)	K0 (mm)	P1 (mm)	W (mm)	Pin1 Quadrant
CD74HC4511M96	SOIC	D	16	2500	330.0	16.4	6.5	10.3	2.1	8.0	16.0	Q1
CD74HC4511PWR	TSSOP	PW	16	2000	330.0	12.4	6.9	5.6	1.6	8.0	12.0	Q1

TAPE AND REEL BOX DIMENSIONS

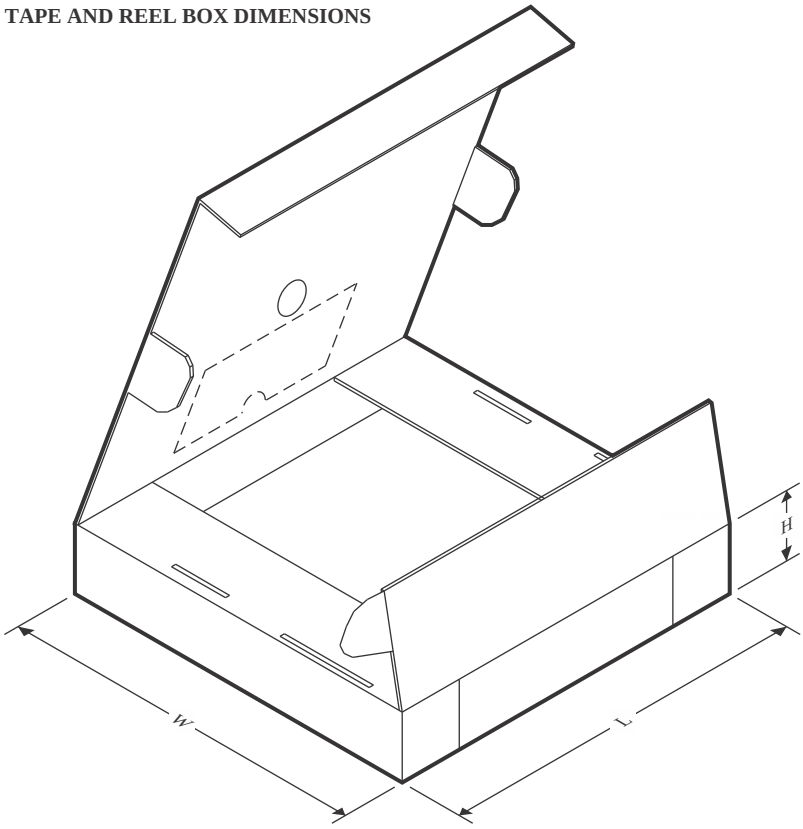

*All dimensions are nominal

Device	Package Type	Package Drawing	Pins	SPQ	Length (mm)	Width (mm)	Height (mm)
CD74HC4511M96	SOIC	D	16	2500	356.0	356.0	35.0
CD74HC4511PWR	TSSOP	PW	16	2000	356.0	356.0	35.0

TUBE

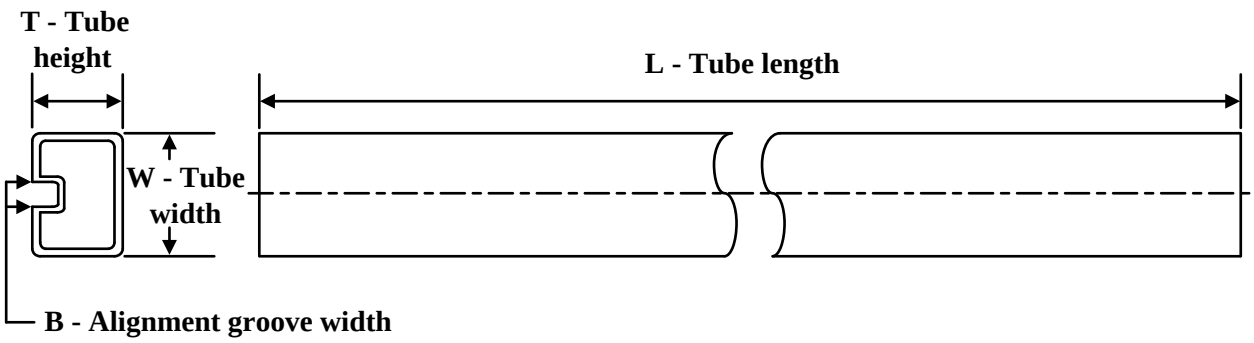

*All dimensions are nominal

Device	Package Name	Package Type	Pins	SPQ	L (mm)	W (mm)	T (µm)	B (mm)
CD74HC4511E	N	PDIP	16	25	506	13.97	11230	4.32
CD74HC4511E	N	PDIP	16	25	506	13.97	11230	4.32
CD74HC4511E.A	N	PDIP	16	25	506	13.97	11230	4.32
CD74HC4511E.A	N	PDIP	16	25	506	13.97	11230	4.32
CD74HC4511EE4	N	PDIP	16	25	506	13.97	11230	4.32
CD74HC4511EE4	N	PDIP	16	25	506	13.97	11230	4.32
CD74HCT4511E	N	PDIP	16	25	506	13.97	11230	4.32
CD74HCT4511E	N	PDIP	16	25	506	13.97	11230	4.32
CD74HCT4511E.A	N	PDIP	16	25	506	13.97	11230	4.32
CD74HCT4511E.A	N	PDIP	16	25	506	13.97	11230	4.32

D (R–PDSO–G16) PLASTIC SMALL OUTLINE

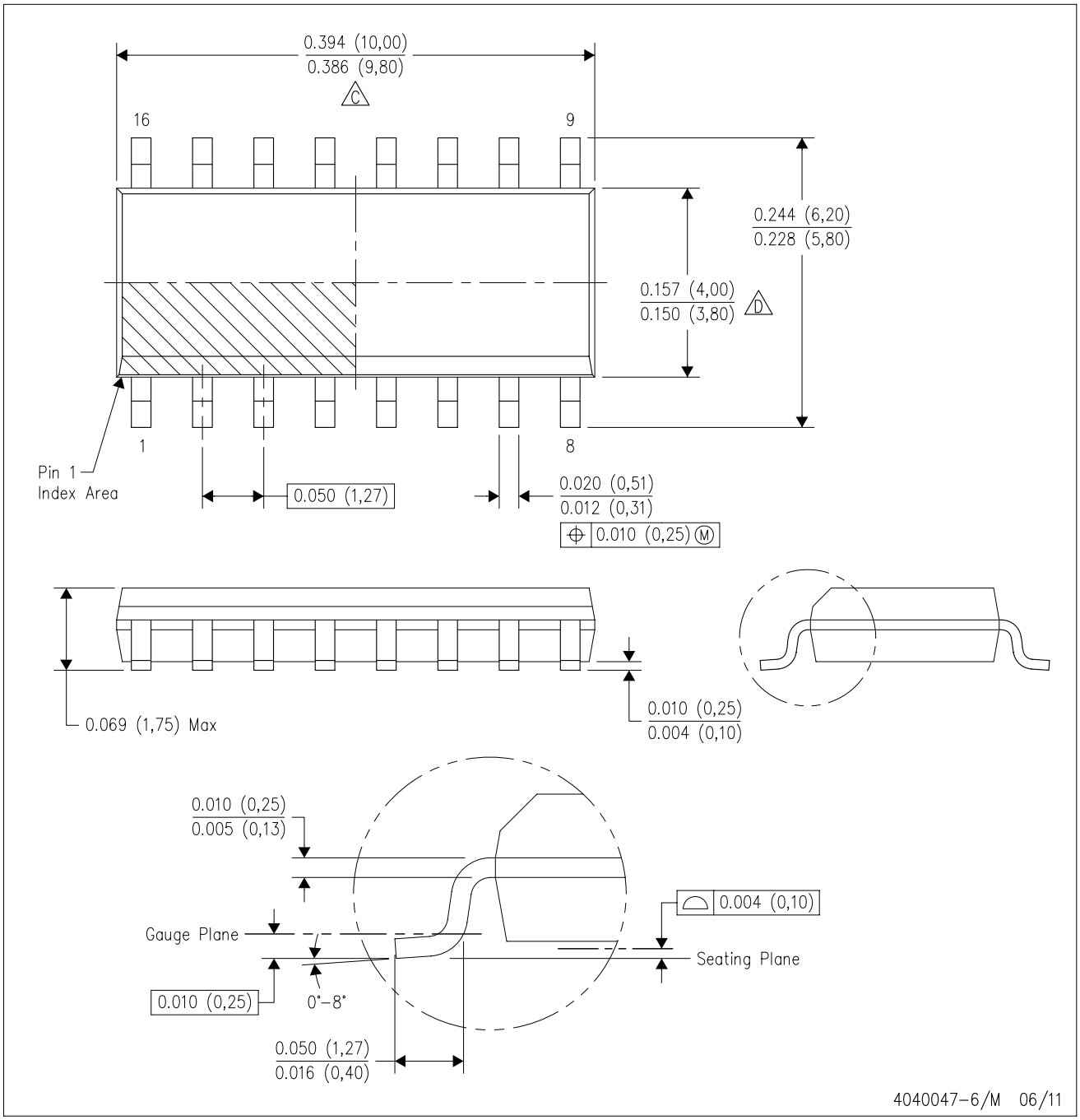

NOTES:
A. All linear dimensions are in inches (millimeters).
B. This drawing is subject to change without notice.
C. Body length does not include mold flash, protrusions, or gate burrs. Mold flash, protrusions, or gate burrs shall not exceed 0.006 (0,15) each side.
D. Body width does not include interlead flash. Interlead flash shall not exceed 0.017 (0,43) each side.
E. Reference JEDEC MS–012 variation AC.

PW0016A

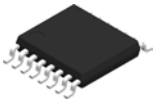

PACKAGE OUTLINE

TSSOP - 1.2 mm max height

SMALL OUTLINE PACKAGE

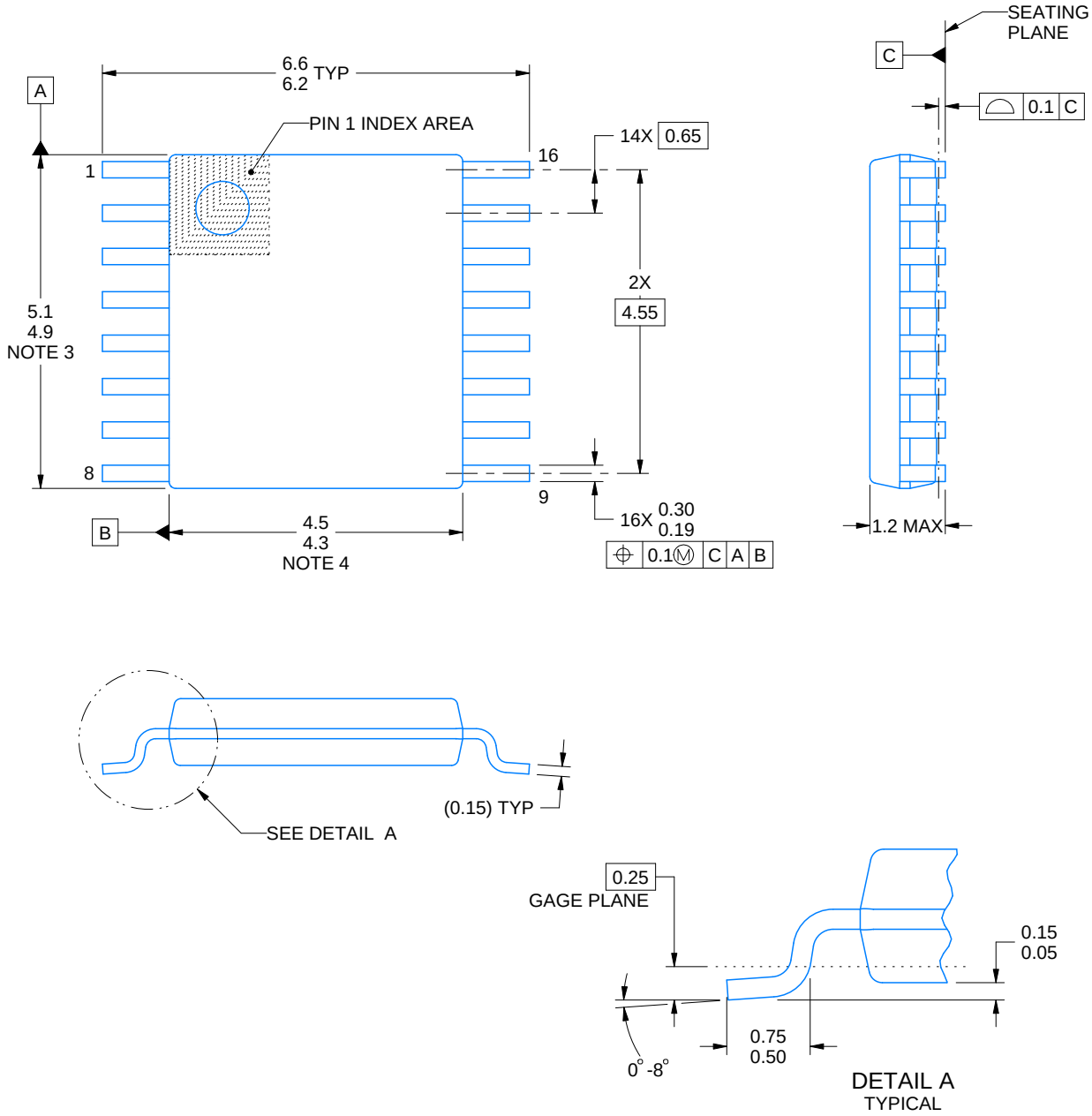

NOTES:

1. All linear dimensions are in millimeters. Any dimensions in parenthesis are for reference only. Dimensioning and tolerancing per ASME Y14.5M.
2. This drawing is subject to change without notice.
3. This dimension does not include mold flash, protrusions, or gate burrs. Mold flash, protrusions, or gate burrs shall not exceed 0.15 mm per side.
4. This dimension does not include interlead flash. Interlead flash shall not exceed 0.25 mm per side.
5. Reference JEDEC registration MO-153.

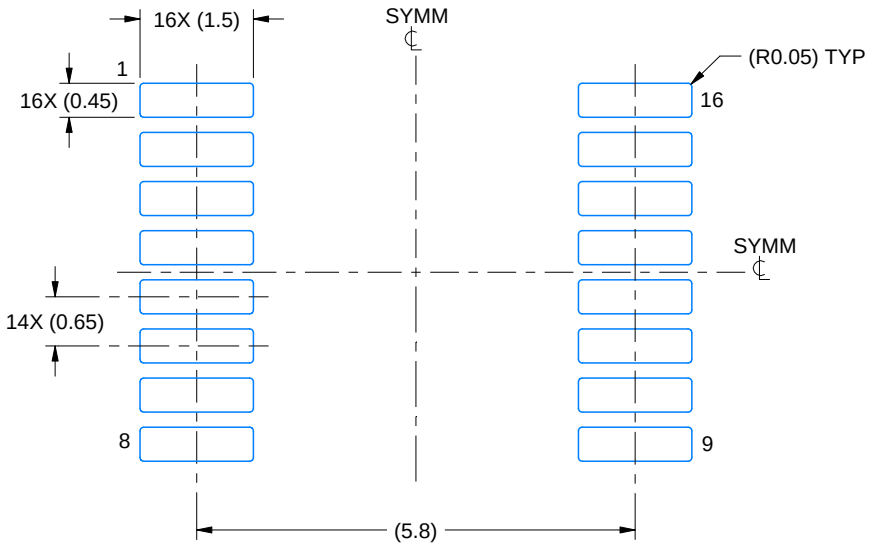

LAND PATTERN EXAMPLE
EXPOSED METAL SHOWN
SCALE: 10X

NON-SOLDER MASK DEFINED (PREFERRED)

SOLDER MASK DEFINED

SOLDER MASK DETAILS

4220204/A 02/2017

NOTES: (continued)

6. Publication IPC-7351 may have alternate designs.
7. Solder mask tolerances between and around signal pads can vary based on board fabrication site.

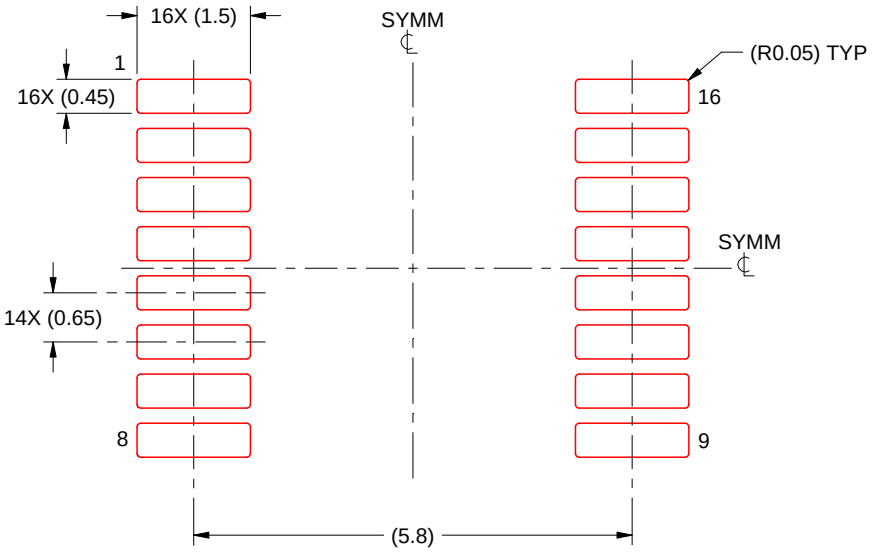

SOLDER PASTE EXAMPLE
BASED ON 0.125 mm THICK STENCIL
SCALE: 10X

4220204/A 02/2017

NOTES: (continued)

8. Laser cutting apertures with trapezoidal walls and rounded corners may offer better paste release. IPC-7525 may have alternate design recommendations.
9. Board assembly site may have different recommendations for stencil design.

J (R–GDIP–T**) CERAMIC DUAL IN–LINE PACKAGE

14 LEADS SHOWN

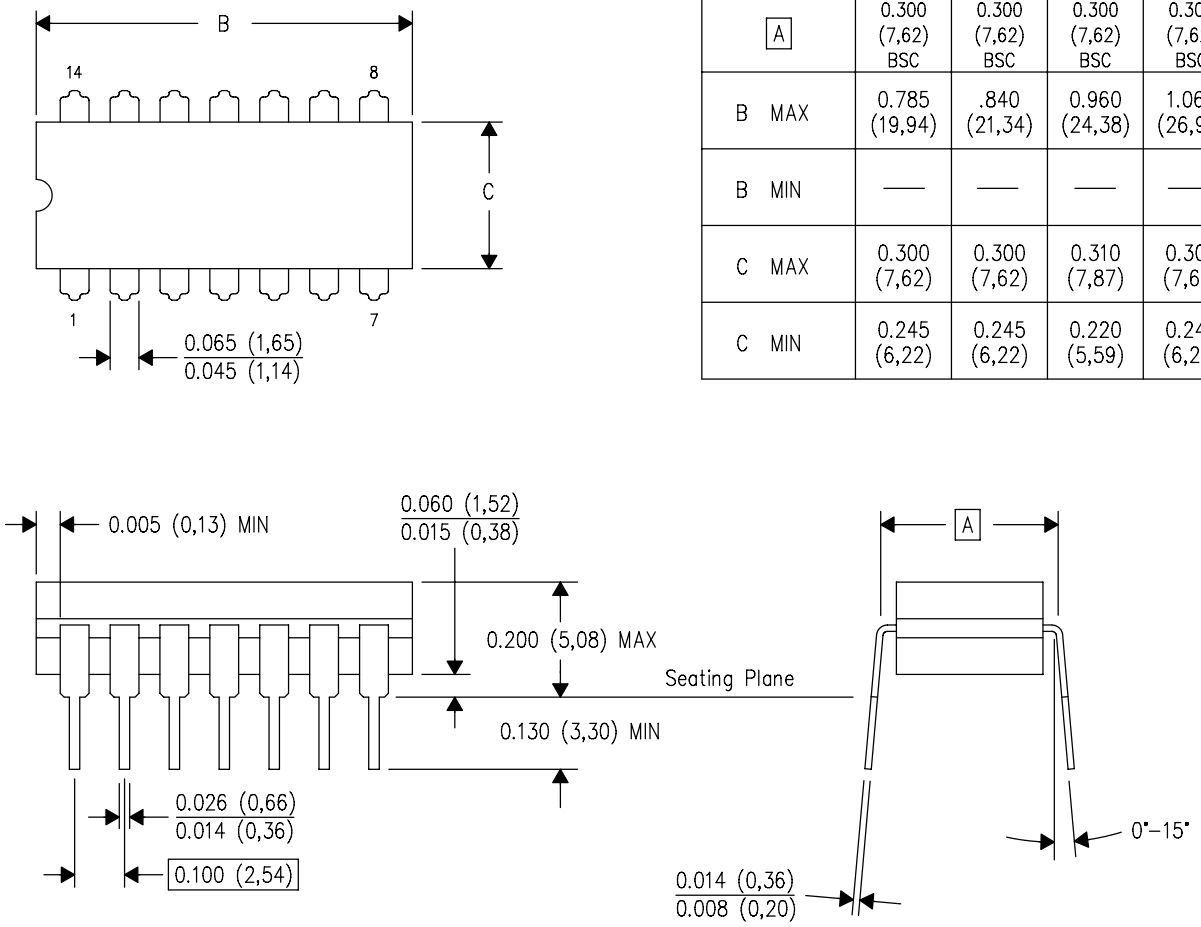

DIM \ PINS **	14	16	18	20
A	0.300 (7,62) BSC	0.300 (7,62) BSC	0.300 (7,62) BSC	0.300 (7,62) BSC
B MAX	0.785 (19,94)	.840 (21,34)	0.960 (24,38)	1.060 (26,92)
B MIN	—	—	—	—
C MAX	0.300 (7,62)	0.300 (7,62)	0.310 (7,87)	0.300 (7,62)
C MIN	0.245 (6,22)	0.245 (6,22)	0.220 (5,59)	0.245 (6,22)

4040083/F 03/03

NOTES:
- A. All linear dimensions are in inches (millimeters).
- B. This drawing is subject to change without notice.
- C. This package is hermetically sealed with a ceramic lid using glass frit.
- D. Index point is provided on cap for terminal identification only on press ceramic glass frit seal only.
- E. Falls within MIL STD 1835 GDIP1–T14, GDIP1–T16, GDIP1–T18 and GDIP1–T20.

N (R–PDIP–T**) PLASTIC DUAL–IN–LINE PACKAGE

16 PINS SHOWN

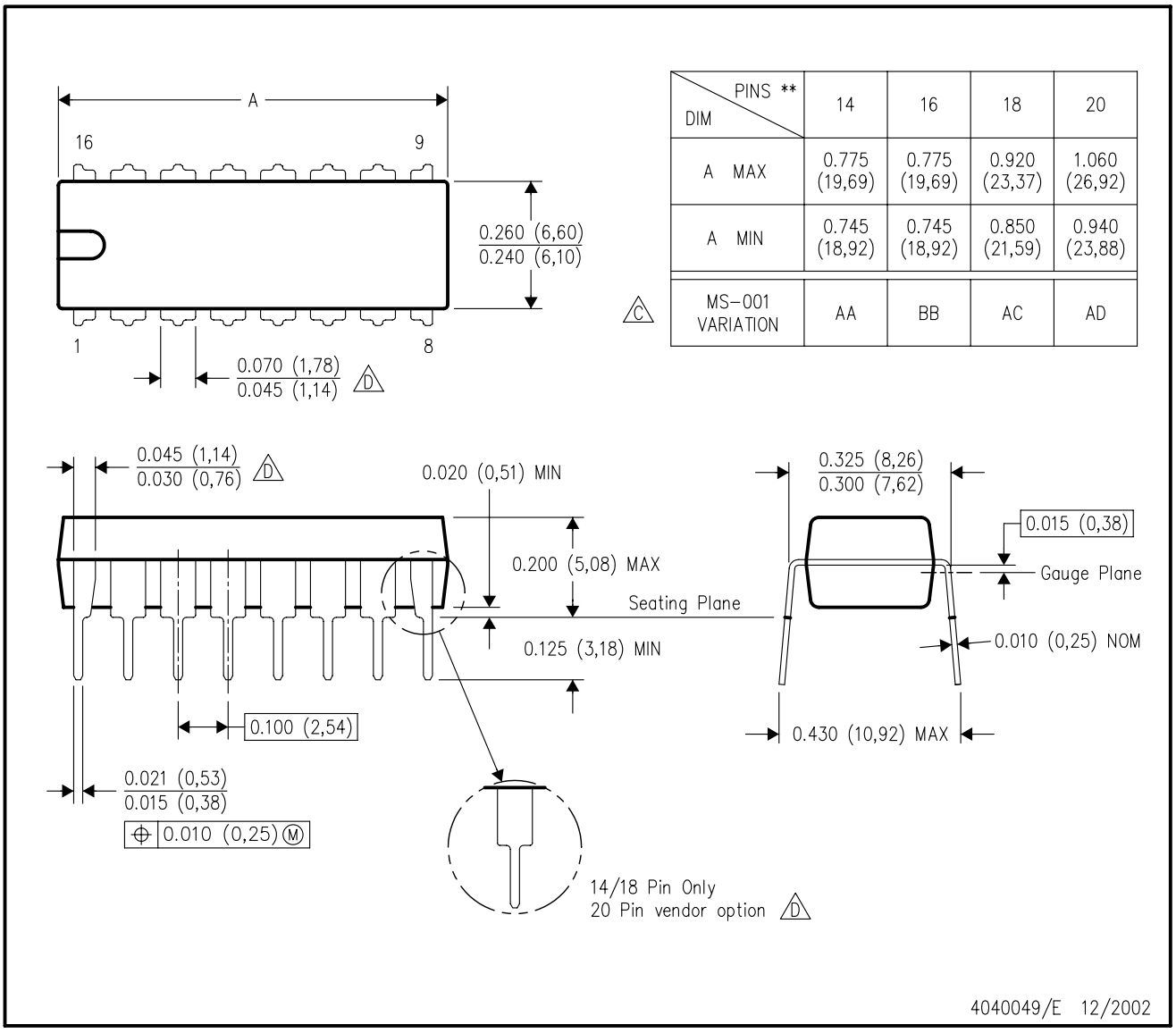

DIM \ PINS **	14	16	18	20
A MAX	0.775 (19,69)	0.775 (19,69)	0.920 (23,37)	1.060 (26,92)
A MIN	0.745 (18,92)	0.745 (18,92)	0.850 (21,59)	0.940 (23,88)
MS–001 VARIATION (C)	AA	BB	AC	AD

NOTES:
A. All linear dimensions are in inches (millimeters).
B. This drawing is subject to change without notice.
C. Falls within JEDEC MS–001, except 18 and 20 pin minimum body length (Dim A).
D. The 20 pin end lead shoulder width is a vendor option, either half or full width.

IMPORTANT NOTICE AND DISCLAIMER

TI PROVIDES TECHNICAL AND RELIABILITY DATA (INCLUDING DATA SHEETS), DESIGN RESOURCES (INCLUDING REFERENCE DESIGNS), APPLICATION OR OTHER DESIGN ADVICE, WEB TOOLS, SAFETY INFORMATION, AND OTHER RESOURCES “AS IS” AND WITH ALL FAULTS, AND DISCLAIMS ALL WARRANTIES, EXPRESS AND IMPLIED, INCLUDING WITHOUT LIMITATION ANY IMPLIED WARRANTIES OF MERCHANTABILITY, FITNESS FOR A PARTICULAR PURPOSE OR NON-INFRINGEMENT OF THIRD PARTY INTELLECTUAL PROPERTY RIGHTS.

These resources are intended for skilled developers designing with TI products. You are solely responsible for (1) selecting the appropriate TI products for your application, (2) designing, validating and testing your application, and (3) ensuring your application meets applicable standards, and any other safety, security, regulatory or other requirements.

These resources are subject to change without notice. TI grants you permission to use these resources only for development of an application that uses the TI products described in the resource. Other reproduction and display of these resources is prohibited. No license is granted to any other TI intellectual property right or to any third party intellectual property right. TI disclaims responsibility for, and you will fully indemnify TI and its representatives against, any claims, damages, costs, losses, and liabilities arising out of your use of these resources.

TI’s products are provided subject to TI’s Terms of Sale or other applicable terms available either on ti.com or provided in conjunction with such TI products. TI’s provision of these resources does not expand or otherwise alter TI’s applicable warranties or warranty disclaimers for TI products.

TI objects to and rejects any additional or different terms you may have proposed.

Mailing Address: Texas Instruments, Post Office Box 655303, Dallas, Texas 75265
Copyright © 2025, Texas Instruments Incorporated