TPS7A54 4A、高精度 (0.5%)、低ノイズ (4.4μV$_{RMS}$)、LDO 電圧レギュレータ

1 特長

- ライン、負荷、温度の全範囲で 0.5% (最大値) の精度 (BIAS 使用時)
- 出力電圧ノイズ：4.4μV$_{RMS}$
- 低いドロップアウト：4A、BIAS ありで 175mV (最大値)
- 電源電圧変動除去比
  - 500kHz時に40dB
- 入力電圧範囲：
  - BIASなし: 1.4V～6.5V
  - BIASあり: 1.1V～6.5V
- 可変出力電圧範囲：0.8 V～5.1 V
- 可変のソフトスタート突入電流制御
- オープン・ドレインのパワー・グッド (PG) 出力
- 2.2mm × 2.5mm の 12 ピン VQFN パッケージ

2 アプリケーション

- マクロ・リモート無線ユニット (RRU)
- 屋外バックホール・ユニット
- アクティブ・アンテナ・システムの mMIMO (AAS)
- 超音波スキャナ
- 実験室およびフィールド用計測機器
- センサ、イメージング、レーダー

3 概要

TPS7A54 は低ノイズ (4.4μV$_{RMS}$)、低ドロップアウトのリニア・レギュレータ (LDO) で、4A を供給でき、ドロップアウトは最大でわずか 175mV です。デバイスの出力電圧は、外付けの分圧抵抗によって0.8V～5.1Vの範囲で調整可能です。

低ノイズ (4.4μV$_{RMS}$)、高 PSRR、大出力電流能力の組み合わせにより、TPS7A54 はレーダーの電源やインフォテインメント・アプリケーションなどに使用される、ノイズに敏感な部品への電源供給に理想的です。このデバイスは高性能で、電源によって生成される位相ノイズとクロック・ジッタを制限するため、RFアンプ、レーダー・センサ、チップセットの電源として理想的です。特に、RF アンプにはこのデバイスの高い性能と 5.0V 出力能力が役立ちます。

製品情報(1)

型番	パッケージ	本体サイズ(公称)
TPS7A54	VQFN (12)	2.20mm×2.50mm

(1) 利用可能なすべてのパッケージについては、このデータシートの末尾にあるパッケージ・オプションについての付録を参照してください。

デジタル負荷の電源

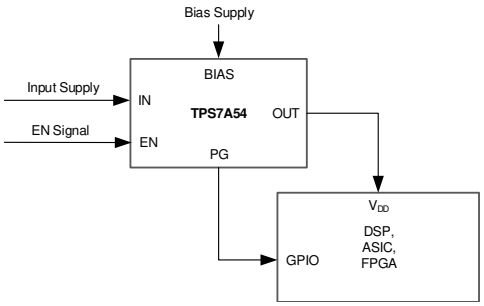

RFコンポーネントの電源

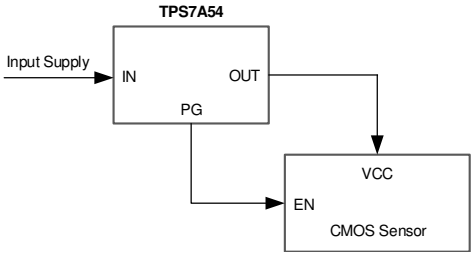

英語版のTI製品についての情報を翻訳したこの資料は、製品の概要を確認する目的で便宜的に提供しているものです。該当する正式な英語版の最新情報は、www.ti.comで閲覧でき、その内容が常に優先されます。TIでは翻訳の正確性および妥当性につきましては一切保証いたしません。実際の設計などの前には、必ず最新版の英語版をご参照くださいますようお願いいたします。

目次

1 特長 1
2 アプリケーション 1
3 概要 1
4 改訂履歴 2
5 概要（続き） 3
6 **Pin Configuration and Functions** 4
7 **Specifications** 5
7.1 Absolute Maximum Ratings 5
7.2 ESD Ratings 5
7.3 Recommended Operating Conditions 5
7.4 Thermal Information 6
7.5 Electrical Characteristics 6
7.6 Typical Characteristics 9
8 **Detailed Description** 16
8.1 Overview 16
8.2 Functional Block Diagram 16
8.3 Feature Description 17
8.4 Device Functional Modes 20
9 **Application and Implementation** 21
9.1 Application Information 21
9.2 Typical Application 32
10 **Power Supply Recommendations** 33
11 **Layout** 33
11.1 Layout Guidelines 33
11.2 Layout Example 33
12 デバイスおよびドキュメントのサポート 34
12.1 デバイス・サポート 34
12.2 ドキュメントのサポート 34
12.3 ドキュメントの更新通知を受け取る方法 34
12.4 コミュニティ・リソース 34
12.5 商標 35
12.6 静電気放電に関する注意事項 35
12.7 Glossary 35
13 メカニカル、パッケージ、および注文情報 35

4 改訂履歴

2019年11月発行のものから更新 **Page**

- ドキュメント・ステータスを事前情報から量産データに 変更 1

Copyright © 2019–2020, Texas Instruments Incorporated

5 概要（続き）

ASIC (Application-Specific Integrated Circuit)、FPGA (Field-Programmable Gate Array)、DSP (Digital Signal Processor) などのデジタル負荷で低入力電圧、低出力電圧 (LILO) 動作を必要とする場合、TPS7A54 の非常に優れた精度 (負荷および温度の全範囲で 0.5%)、リモート・センシング、優れた過渡性能、ソフトスタート機能によって、最適なシステム性能が実現されます。

可変電圧レギュレータである TPS7A54 は汎用性が高いため、電圧制御オシレータ (VCO)、アナログ / デジタル・コンバータ (ADC)、デジタル / アナログ・コンバータ (DAC)、イメージング・センサなどのアナログ負荷や、シリアライザ / デシリアライザ (SerDes)、FPGA (Field-Programmable Gate Array)、DSP (Digital Signal Processor) などのデジタル負荷に最適です。

Copyright © 2019–2020, Texas Instruments Incorporated

6 Pin Configuration and Functions

RPS Package
2.2-mm × 2.5-mm, 12-Pin VQFN
Top View

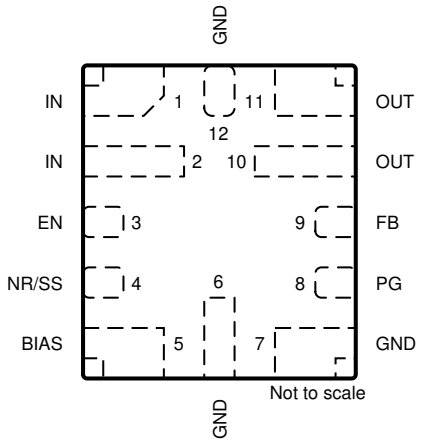

Pin Functions

PIN			DESCRIPTION
NAME	NO.	I/O	
BIAS	5	I	BIAS supply voltage. This pin enables the use of low-input voltage, low-output (LILO) voltage conditions (that is, V_{IN} = 1.2 V, V_{OUT} = 1 V) to reduce power dissipation across the die. The use of a BIAS voltage improves dc and ac performance for V_{IN} ≤ 2.2 V. A 10-µF capacitor or larger must be connected between this pin and ground. If not used, this pin must be left floating or tied to ground.
EN	3	I	Enable pin. Driving this pin to logic high enables the device; driving this pin to logic low disables the device. If enable functionality is not required, this pin must be connected to IN or BIAS.
FB	9	I	Feedback pin connected to the error amplifier. Although not required, a 10-nF feed-forward capacitor from FB to OUT (as close to the device as possible) is recommended to maximize ac performance. The use of a feed-forward capacitor can disrupt PG (power good) functionality.
GND	6, 7, 12	—	Ground pin. These pins must be connected to ground, the thermal pad, and each other with a low-impedance connection.
IN	1, 2	I	Input supply voltage pin. A 10-µF or larger ceramic capacitor (5 µF or greater of capacitance) from IN to ground is recommended to reduce the impedance of the input supply. Place the input capacitor as close to the input as possible.
NR/SS	4	—	Noise-reduction and soft-start pin. Connecting an external capacitor between this pin and ground reduces reference voltage noise and also enables the soft-start function. Although not required, a 10-nF or larger capacitor is recommended to be connected from NR/SS to GND (as close to the pin as possible) to maximize ac performance.
OUT	10, 11	O	Regulated output pin. A 47-µF or larger ceramic capacitor (25 µF or greater of capacitance) from OUT to ground is required for stability and must be placed as close to the output as possible. Minimize the impedance from the OUT pin to the load.
PG	8	O	Active-high, power-good pin. An open-drain output indicates when the output voltage reaches $V_{IT(PG)}$ of the target. The use of a feed-forward capacitor can disrupt PG (power good) functionality.

Copyright © 2019–2020, Texas Instruments Incorporated

7 Specifications

7.1 Absolute Maximum Ratings

over operating free-air temperature range (unless otherwise noted)[1]

		MIN	MAX	UNIT
Voltage	IN, BIAS, PG, EN	–0.3	7.0	V
	SNS, OUT	–0.3	V_{IN} + 0.3[2]	
	NR/SS, FB	–0.3	3.6	
Current	OUT	Internally limited		A
	PG (sink current into device)		5	mA
Temperature	operating junction, T_J	–55	150	°C
	storage, T_{stg}	–55	150	

(1) Stresses beyond those listed under *Absolute Maximum Rating* may cause permanent damage to the device. These are stress ratings only, which do not imply functional operation of the device at these or any other conditions beyond those indicated under *Recommended Operating Condition*. Exposure to absolute-maximum-rated conditions for extended periods may affect device reliability.
(2) The absolute maximum rating is V_{IN} + 0.3 V or 7.0 V, whichever is smaller.

7.2 ESD Ratings

			VALUE	UNIT
$V_{(ESD)}$	Electrostatic discharge	Human body model (HBM), per ANSI/ESDA/JEDEC JS-001, all pins[1]	±2000	V
		Charged device model (CDM), per JEDEC specification JESD22-C101, all pins[2]	±500	

(1) JEDEC document JEP155 states that 500-V HBM allows safe manufacturing with a standard ESD control process.
(2) JEDEC document JEP157 states that 250-V CDM allows safe manufacturing with a standard ESD control process.

7.3 Recommended Operating Conditions

over operating junction temperature range (unless otherwise noted)

		MIN	NOM	MAX	UNIT
V_{IN}	Input supply voltage range	1.1		6.5	V
V_{BIAS}	Bias supply voltage range	3.0		6.5	V
V_{OUT}	Output voltage range[1]	0.8		5.15	V
V_{EN}	Enable voltage range	0		6.5	V
I_{OUT}	Output current	0		4	A
C_{IN}	Input capacitor	22	47	3000	µF
C_{OUT}	Output capacitor	22	47	3000	µF
R_{PG}	Power-good pullup resistance	1		100	kΩ
$C_{NR/SS}$	NR/SS capacitor		10		nF
C_{FF}	Feed-forward capacitor		10		nF
R_1	Top resistor value in feedback network for adjustable operation		12.1		kΩ
R_2	Bottom resistor value in feedback network for adjustable operation			160[2]	kΩ
T_J	Operating junction temperature	–40		125	°C

(1) This output voltage range does not include device accuracy or accuracy of the feedback resistors.
(2) The upper limit for the R_2 resistor is to ensure accuracy by making the current through the feedback network much larger than the leakage current into the feedback node.

Copyright © 2019–2020, Texas Instruments Incorporated

7.4 Thermal Information

THERMAL METRIC[1]		TPS7A54		UNIT
		RPS (VQFN)[2]	RPS (VQFN)[3]	
		12 PINS	12 PINS	
$R_{\theta JA}$	Junction-to-ambient thermal resistance	68.7	46.5	°C/W
$R_{\theta JC(top)}$	Junction-to-case (top) thermal resistance	43.8	43.8	°C/W
$R_{\theta JB}$	Junction-to-board thermal resistance	19.3	N/A	°C/W
Ψ_{JT}	Junction-to-top characterization parameter	1.3	4.5	°C/W
Ψ_{JB}	Junction-to-board characterization parameter	18.9	22	°C/W
$R_{\theta JC(bot)}$	Junction-to-case (bottom) thermal resistance	4.2	11.4	°C/W

(1) For more information about traditional and new thermal metrics, see the Semiconductor and IC Package Thermal Metrics application report.
(2) JEDEC standard. (2s2p, no vias to internal planes and bottom layer)
(3) EVM model.

7.5 Electrical Characteristics

over operating junction temperature range (T_J = –40°C to +125°C), V_{IN} = 1.4 V or V_{IN} = $V_{OUT(nom)}$ + 0.5 V (whichever is greater), V_{BIAS} = open, $V_{OUT(nom)}$) = 0.8 V[1], OUT connected to 50 Ω to GND, V_{EN} = 1.1 V, C_{IN} = 10 µF, C_{OUT} = 47 µF, $C_{NR/SS}$ = 0 nF, C_{FF} = 0 nF, and PG pin pulled up to V_{IN} with 100 kΩ, unless otherwise noted; typical values are at T_J = 25°C

PARAMETER		TEST CONDITIONS	MIN	TYP	MAX	UNIT
V_{FB}	Feedback voltage			0.8		V
$V_{NR/SS}$	NR/SS pin voltage			0.8		V
$V_{UVLO+(IN)}$	Rising input supply UVLO with BIAS	V_{IN} rising with V_{BIAS} = 3 V		1.02	1.085	V
$V_{UVLO-(IN)}$	Falling input supply UVLO with BIAS	V_{IN} falling with V_{BIAS} = 3 V	0.55	0.7		V
$V_{UVLO+(IN)}$	Rising input supply UVLO without BIAS	V_{IN} rising		1.31	1.39	V
$V_{UVLO-(IN)}$	Falling input supply UVLO without BIAS	V_{IN} falling	0.65	1.057		V
$V_{UVLO+(BIAS)}$	Rising bias supply UVLO	V_{BIAS} rising, V_{IN} = 1.1 V		2.83	2.9	V
$V_{UVLO-(BIAS)}$	Falling bias supply UVLO	V_{BIAS} falling, V_{IN} = 1.1 V	2.45	2.54		V
V_{OUT}	Output voltage range		0.8		5.1	V
	Output voltage accuracy	1.4 V ≤ V_{IN} ≤ 6.5 V, 0.8 V ≤ V_{OUT} ≤ 5.1 V, 5 mA ≤ I_{OUT} ≤ 4 A	-0.75		0.75	%
		V_{IN} =1.1 V, 5 mA ≤ I_{OUT} ≤ 4 A, 3 V ≤ V_{BIAS} ≤ 6.5 V	-0.5		0.5	
$DV_{OUT}/\Delta V_{IN}$	Line regulation	I_{OUT} = 5 mA, 1.4 V ≤ V_{IN} ≤ 6.5 V		0.03		mV/V
$DV_{OUT}/\Delta V_{IN}$	Load regulation	5 mA ≤ I_{OUT} ≤ 4 A, 3 V ≤ V_{BIAS} ≤ 6.5 V, V_{IN} = 1.1 V		0.07		mV/A
		5 mA ≤ I_{OUT} ≤ 4 A		0.012		
V_{OS}	Error amplifier offset voltage	V_{IN} = 1.4V, I_{OUT} = 5mA; -40℃ ≤ T_J ≤ +125℃	-2.5		2.5	mV

(1) $V_{OUT(nom)}$ is the calculated V_{OUT} target value from the ANY-OUT in a fixed configuration. In an adjustable configuration, $V_{OUT(nom)}$ is the expected V_{OUT} value set by the external feedback resistors.

Copyright © 2019–2020, Texas Instruments Incorporated

Electrical Characteristics (continued)

over operating junction temperature range (T_J = –40°C to +125°C), V_{IN} = 1.4 V or V_{IN} = $V_{OUT(nom)}$ + 0.5 V (whichever is greater), V_{BIAS} = open, $V_{OUT(nom)}$) = 0.8 V[(1)], OUT connected to 50 Ω to GND, V_{EN} = 1.1 V, C_{IN} = 10 µF, C_{OUT} = 47 µF, $C_{NR/SS}$ = 0 nF, C_{FF} = 0 nF, and PG pin pulled up to V_{IN} with 100 kΩ, unless otherwise noted; typical values are at T_J = 25°C

PARAMETER		TEST CONDITIONS	MIN	TYP	MAX	UNIT
V_{DO}	Dropout voltage	V_{IN} = 1.4 V, I_{OUT} = 4 A, V_{FB} = 0.8 V – 3%		140	235	mV
		V_{IN} = 5.5 V, I_{OUT} = 4 A, V_{FB} = 0.8 V – 3%		250	415	
		V_{IN} = 5.7 V, I_{OUT} = 4 A, V_{FB} = 0.8 V – 3%		330	565	
		V_{IN} = 1.1 V, 3.0 V ≤ V_{BIAS} ≤ 6.5 V, I_{OUT} = 4 A, V_{FB} = 0.8 V – 3%		85	175	
I_{LIM}	Output current limit	V_{OUT} forced at 0.9 × $V_{OUT(nom)}$, V_{IN} = $V_{OUT(nom)}$ + 0.4 V	4.6	5.2	5.9	A
I_{SC}	Short-circuit current limit	R_{LOAD} = 20 mΩ		2		A
I_{GND}	GND pin current	V_{IN} = 6.5 V, I_{OUT} = 5 mA		2.8	4	mA
		V_{IN} = 1.4 V, I_{OUT} = 4 A		4.8	6	
		Shutdown, PG = open, V_{IN} = 6.5 V, V_{EN} = 0.5 V			25	µA
I_{EN}	EN pin current	V_{IN} = 6.5 V, V_{EN} = 0 V and 6.5 V			0.5	µA
I_{BIAS}	BIAS pin current	V_{IN} = 1.1 V, V_{BIAS} = 6.5 V, $V_{OUT(nom)}$ = 0.8 V, I_{OUT} = 4 A		2.3	3.5	mA
$V_{IL(EN)}$	EN pin low-level input voltage (disable device)		0		0.5	V
$V_{IH(EN)}$	EN pin high-level input voltage (enable device)		1.1		6.5	V
$V_{IT-(PG)}$	Falling PG pin threshold	For falling V_{OUT}	82% × V_{OUT}	88.3% × V_{OUT}	93% × V_{OUT}	V
$V_{IT+(PG)}$	Rising PG pin threshold	For rising V_{OUT}	84% × V_{OUT}	89.3% × V_{OUT}	95% × V_{OUT}	V
$V_{OL(PG)}$	PG pin low-level output voltage	V_{OUT} < $V_{IT(PG)}$, I_{PG} = –1 mA (current into device)			0.4	V
$I_{lkg(PG)}$	PG pin leakage current	V_{OUT} > $V_{IT(PG)}$, V_{PG} = 6.5 V			1	µA
$I_{NR/SS}$	NR/SS pin charging current	$V_{NR/SS}$ = GND, V_{IN} = 6.5 V	4	6.2	9	µA
I_{FB}	FB pin leakage current	V_{IN} = 6.5 V			100	nA
R_{NR}	NR resistor value			250		kΩ
PSRR	Power-supply rejection ratio	V_{IN} – V_{OUT} = 0.5 V, V_{OUT} = 0.8 V, V_{BIAS} = 5 V, I_{OUT} = 4 A, $C_{NR/SS}$ = 100 nF, C_{FF} = 10 nF, C_{OUT} = 47 µF || 10 µF || 10 µF, f = 10 kHz		42		dB
		V_{IN} – V_{OUT} = 0.5 V, V_{OUT} = 0.8 V, V_{BIAS} = 5 V, I_{OUT} = 4 A, $C_{NR/SS}$ = 100 nF, C_{FF} = 10 nF, C_{OUT} = 47 µF || 10 µF || 10 µF, f = 500 kHz		39		

Copyright © 2019–2020, Texas Instruments Incorporated

Electrical Characteristics (continued)

over operating junction temperature range (T_J = –40°C to +125°C), V_{IN} = 1.4 V or V_{IN} = $V_{OUT(nom)}$ + 0.5 V (whichever is greater), V_{BIAS} = open, $V_{OUT(nom)}$) = 0.8 V[(1)], OUT connected to 50 Ω to GND, V_{EN} = 1.1 V, C_{IN} = 10 µF, C_{OUT} = 47 µF, $C_{NR/SS}$ = 0 nF, C_{FF} = 0 nF, and PG pin pulled up to V_{IN} with 100 kΩ, unless otherwise noted; typical values are at T_J = 25°C

PARAMETER		TEST CONDITIONS	MIN	TYP	MAX	UNIT
V_n	Output noise voltage	Bandwidth = 10 Hz to 100 kHz, V_{IN} = 1.1 V, V_{OUT} = 0.8 V, V_{BIAS} = 5 V, I_{OUT} = 4 A, $C_{NR/SS}$ = 100 nF, C_{FF} = 10 nF, C_{OUT} = 47 µF || 10 µF || 10 µF		4.4		µV_{RMS}
		Bandwidth = 10 Hz to 100 kHz, V_{OUT} = 5 V, I_{OUT} = 4 A, $C_{NR/SS}$ = 100 nF, C_{FF} = 10 nF, C_{OUT} = 47 µF || 10 µF || 10 µF		8.4		
T_{sd+}	Thermal shutdown temperature increasing	Shutdown, temperature increasing		160		°C
T_{sd-}	Thermal shutdown temperature decreasing	Reset, temperature decreasing		140		°C

Copyright © 2019–2020, Texas Instruments Incorporated

7.6 Typical Characteristics

at T_A = 25°C, V_{IN} = 1.4 V or V_{IN} = $V_{OUT(NOM)}$ + 0.4 V (whichever is greater), V_{BIAS} = open, $V_{OUT(NOM)}$ = 0.8 V, V_{EN} = 1.1 V, C_{OUT} = 47 µF, $C_{NR/SS}$ = 0 nF, C_{FF} = 0 nF, and PG pin pulled up to V_{IN} with 100 kΩ (unless otherwise noted)

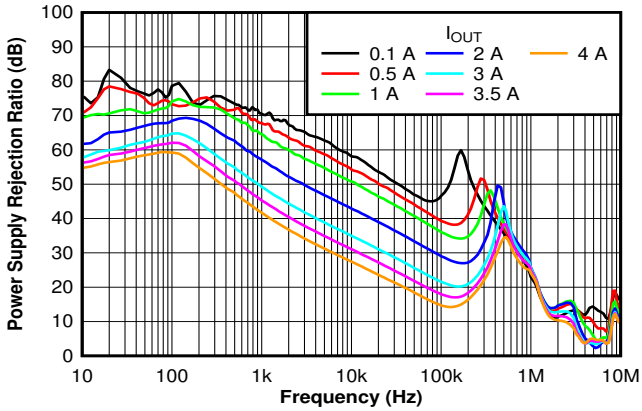

V_{IN} = 1.2 V, V_{BIAS} = 5 V,
C_{OUT} = 47 µF || 10 µF || 10 µF, $C_{NR/SS}$ = 10 nF, C_{FF} = 10 nF

図 1. PSRR vs Frequency and I_{OUT}

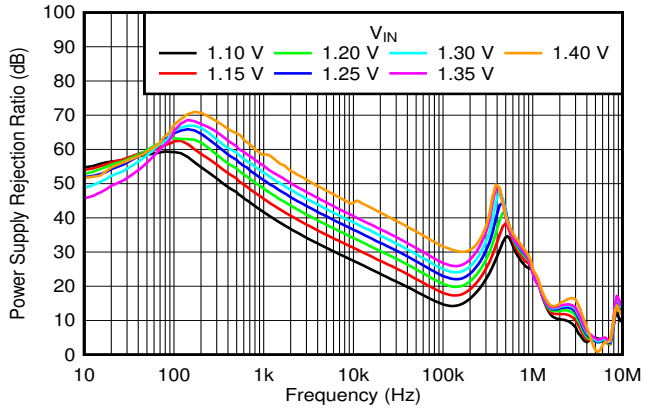

I_{OUT} = 4 A, V_{BIAS} = 5 V,
C_{OUT} = 47 µF || 10 µF || 10 µF, $C_{NR/SS}$ = 10 nF, C_{FF} = 10 nF

図 2. PSRR vs Frequency and V_{IN} With Bias

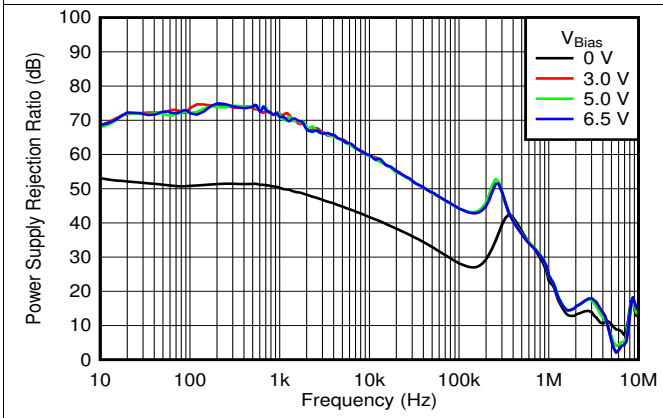

V_{IN} = 1.4 V, I_{OUT} = 1 A,
C_{OUT} = 47 µF || 10 µF || 10 µF, $C_{NR/SS}$ = 10 nF, C_{FF} = 10 nF

図 3. PSRR vs Frequency and V_{BIAS}

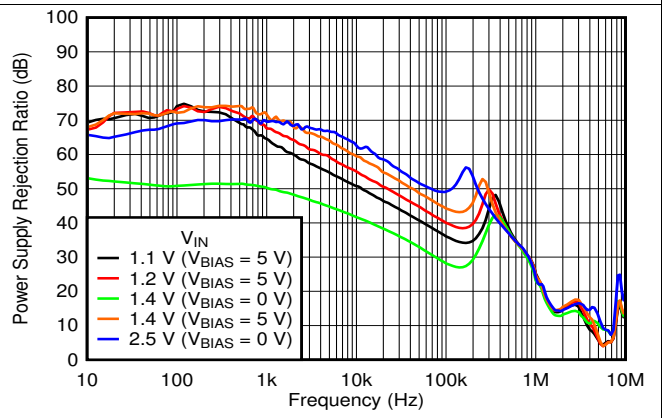

I_{OUT} = 1 A,
C_{OUT} = 47 µF || 10 µF || 10 µF, $C_{NR/SS}$ = 10 nF, C_{FF} = 10 nF

図 4. PSRR vs Frequency and V_{IN}

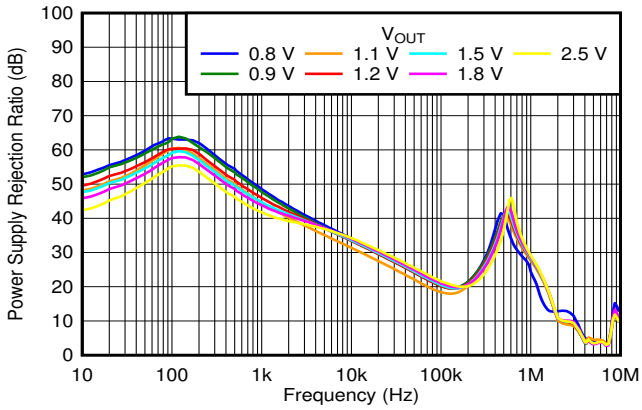

V_{IN} = V_{OUT} + 0.4 V, V_{BIAS} = 5.0 V, I_{OUT} = 4 A,
C_{OUT} = 47 µF || 10 µF || 10 µF, $C_{NR/SS}$ = 10 nF, C_{FF} = 10 nF

図 5. PSRR vs Frequency and V_{OUT} With Bias

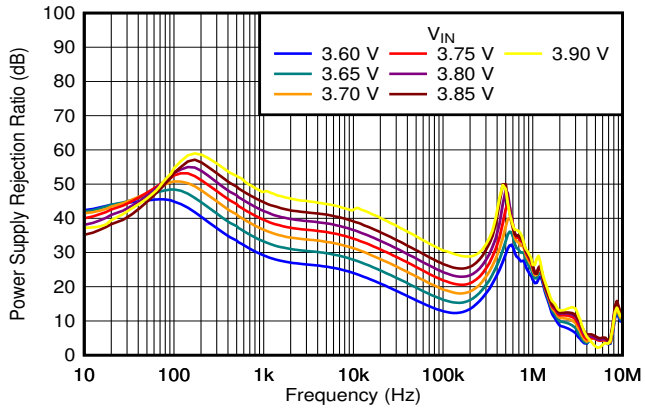

I_{OUT} = 4 A,
C_{OUT} = 47 µF || 10 µF || 10 µF, $C_{NR/SS}$ = 10 nF, C_{FF} = 10 nF

図 6. PSRR vs Frequency and V_{IN} for V_{OUT} = 3.3 V

Copyright © 2019–2020, Texas Instruments Incorporated

Typical Characteristics (continued)

at T_A = 25°C, V_{IN} = 1.4 V or V_{IN} = $V_{OUT(NOM)}$ + 0.4 V (whichever is greater), V_{BIAS} = open, $V_{OUT(NOM)}$ = 0.8 V, V_{EN} = 1.1 V, C_{OUT} = 47 µF, $C_{NR/SS}$ = 0 nF, C_{FF} = 0 nF, and PG pin pulled up to V_{IN} with 100 kΩ (unless otherwise noted)

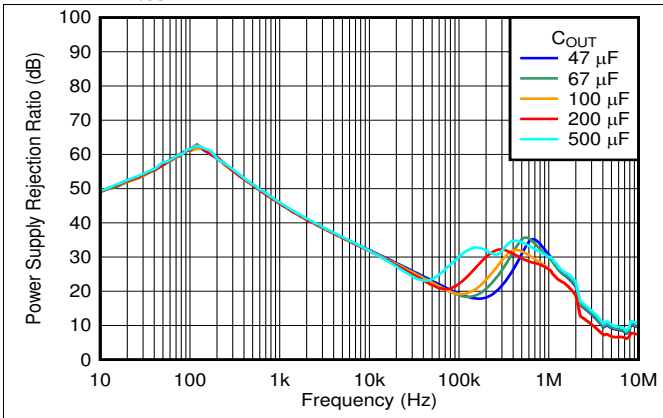

V_{IN} = V_{OUT} + 0.4 V, V_{OUT} = 1 V, I_{OUT} = 4 A,
$C_{NR/SS}$ = 10 nF, C_{FF} = 10 nF

図 7. PSRR vs Frequency and C_{OUT}

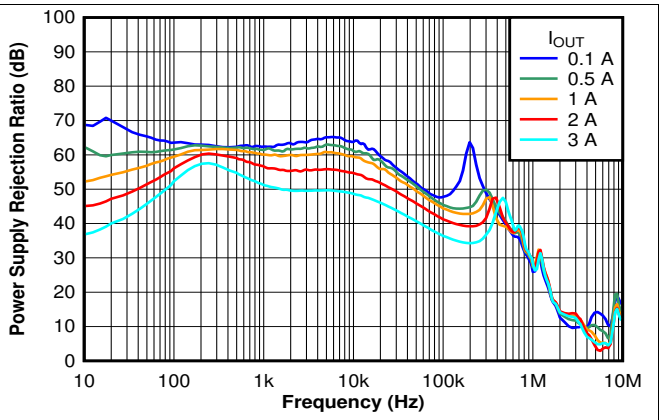

V_{IN} = V_{OUT} + 0.6 V,
C_{OUT} = 47 µF || 10 µF || 10 µF, $C_{NR/SS}$ = 10 nF, C_{FF} = 10 nF

図 8. PSRR vs Frequency and I_{OUT} for V_{OUT} = 5 V

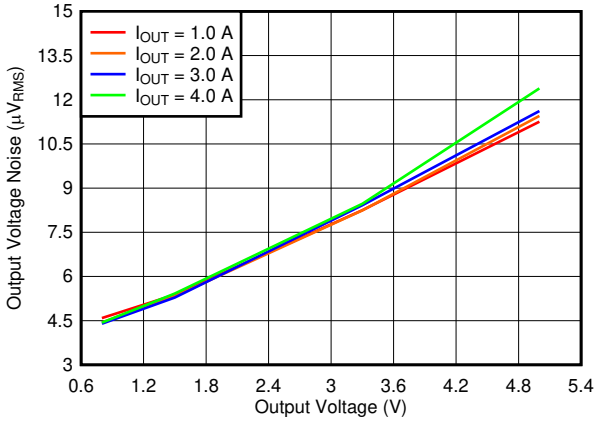

V_{IN} = V_{OUT} + 0.4 V and V_{BIAS} = 5 V for V_{OUT} ≤ 2.2 V,
C_{OUT} = 47 µF || 10 µF || 10 µF, $C_{NR/SS}$ = 10 nF, C_{FF} = 10 nF,
RMS noise BW = 10 Hz to 100 kHz

図 9. Output Voltage Noise vs Output Voltage

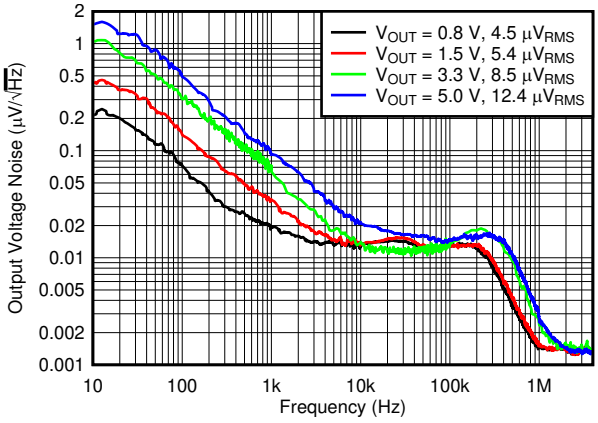

V_{IN} = V_{OUT} + 0.4 V and V_{BIAS} = 5 V for V_{OUT} ≤ 2.2 V, I_{OUT} = 4 A,
C_{OUT} = 47 µF || 10 µF || 10 µF, $C_{NR/SS}$ = 10 nF, C_{FF} = 10 nF,
RMS noise BW = 10 Hz to 100 kHz

図 10. Output Noise vs Frequency and V_{OUT}

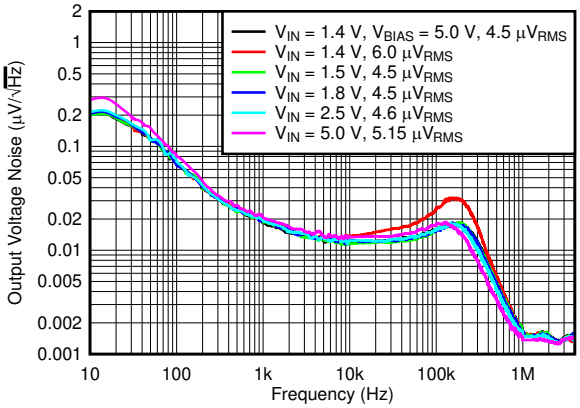

I_{OUT} = 1 A,
C_{OUT} = 47 µF || 10 µF || 10 µF, $C_{NR/SS}$ = 10 nF, C_{FF} = 10 nF,
RMS noise BW = 10 Hz to 100 kHz

図 11. Output Noise vs Frequency and Input Voltage

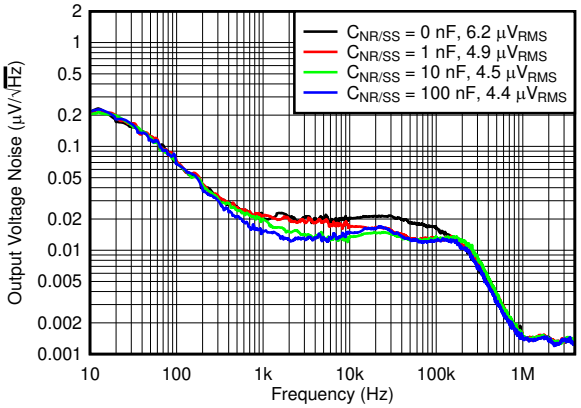

V_{IN} = V_{OUT} + 0.4 V, V_{BIAS} = 5 V, I_{OUT} = 4 A,
C_{OUT} = 47 µF || 10 µF || 10 µF, C_{FF} = 10 nF,
RMS noise BW = 10 Hz to 100 kHz

図 12. Output Noise vs Frequency and $C_{NR/SS}$

Copyright © 2019–2020, Texas Instruments Incorporated

Typical Characteristics (continued)

at T_A = 25°C, V_{IN} = 1.4 V or V_{IN} = $V_{OUT(NOM)}$ + 0.4 V (whichever is greater), V_{BIAS} = open, $V_{OUT(NOM)}$ = 0.8 V, V_{EN} = 1.1 V, C_{OUT} = 47 µF, $C_{NR/SS}$ = 0 nF, C_{FF} = 0 nF, and PG pin pulled up to V_{IN} with 100 kΩ (unless otherwise noted)

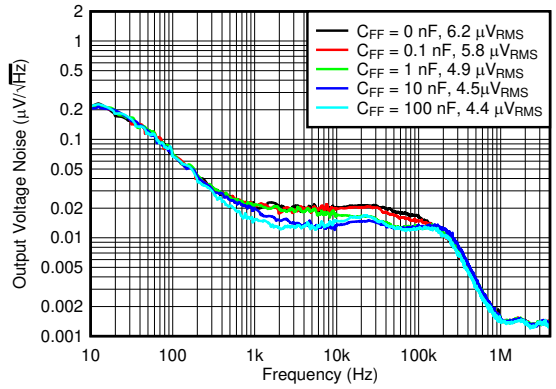

V_{IN} = V_{OUT} + 0.4 V, V_{BIAS} = 5 V, I_{OUT} = 4 A, sequencing with a DC/DC converter and PG, C_{OUT} = 47 µF || 10 µF || 10 µF, $C_{NR/SS}$ = 10 nF, RMS noise BW = 10 Hz to 100 kHz

図 13. Output Noise vs Frequency and C_{FF}

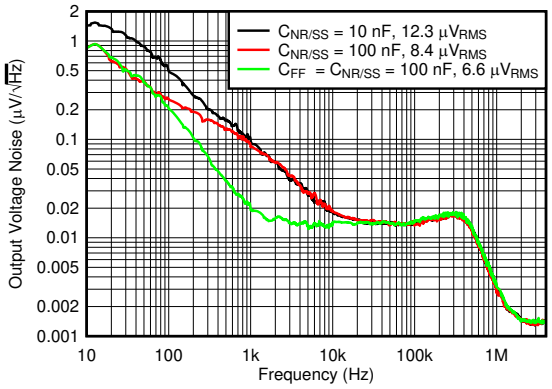

V_{IN} = 5.6 V, I_{OUT} = 4 A, C_{OUT} = 47 µF || 10 µF || 10 µF, C_{FF} = 10 nF, RMS noise BW = 10 Hz to 100 kHz

図 14. Output Noise at 5.0-V Output

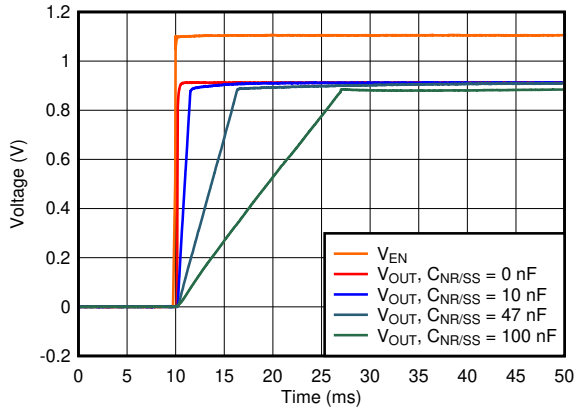

V_{IN} = 1.2 V, V_{OUT} = 0.9 V, V_{BIAS} = 5.0 V, I_{OUT} = 4 A, C_{OUT} = 47 µF || 10 µF || 10 µF, C_{FF} = 10 nF

図 15. Start-Up Waveform vs Time and $C_{NR/SS}$

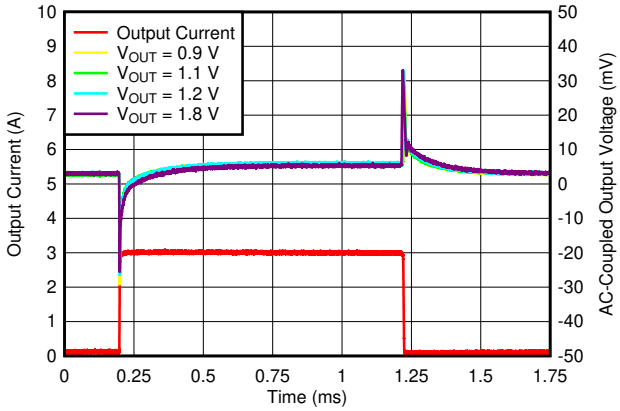

V_{IN} = V_{OUT} + 0.3 V, V_{BIAS} = 5 V, $I_{OUT, DC}$ = 100 mA, slew rate = 1 A/µs, $C_{NR/SS}$ = C_{FF} = 10 nF, C_{OUT} = 47 µF || 10 µF || 10 µF

図 16. Load Transient vs Time and V_{OUT} With Bias

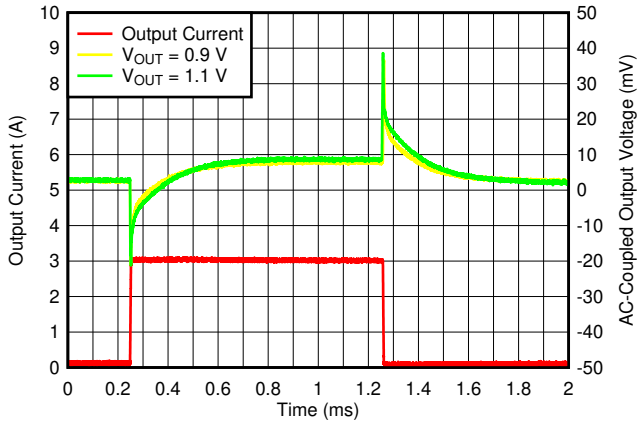

$I_{OUT, DC}$ = 100 mA, C_{OUT} = 47 µF || 10 µF || 10 µF, $C_{NR/SS}$ = C_{FF} = 10 nF, slew rate = 1 A/µs

図 17. Load Transient vs Time and V_{OUT} Without Bias

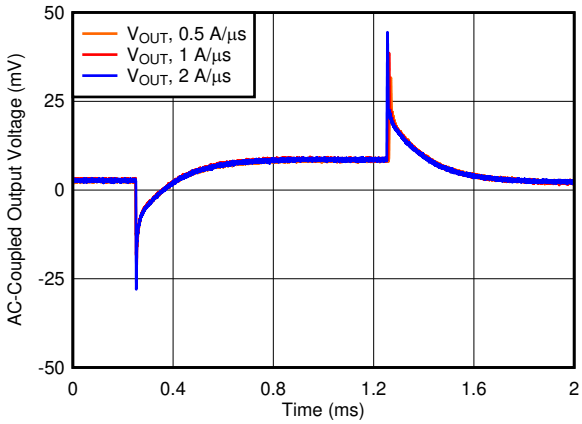

V_{OUT} = 5 V, $I_{OUT, DC}$ = 100 mA, I_{OUT} = 100 mA to 4 A, C_{OUT} = 47 µF || 10 µF || 10 µF, $C_{NR/SS}$ = C_{FF} = 10 nF

図 18. Load Transient vs Time and Slew Rate

Typical Characteristics (continued)

at T_A = 25°C, V_{IN} = 1.4 V or V_{IN} = $V_{OUT(NOM)}$ + 0.4 V (whichever is greater), V_{BIAS} = open, $V_{OUT(NOM)}$ = 0.8 V, V_{EN} = 1.1 V, C_{OUT} = 47 µF, $C_{NR/SS}$ = 0 nF, C_{FF} = 0 nF, and PG pin pulled up to V_{IN} with 100 kΩ (unless otherwise noted)

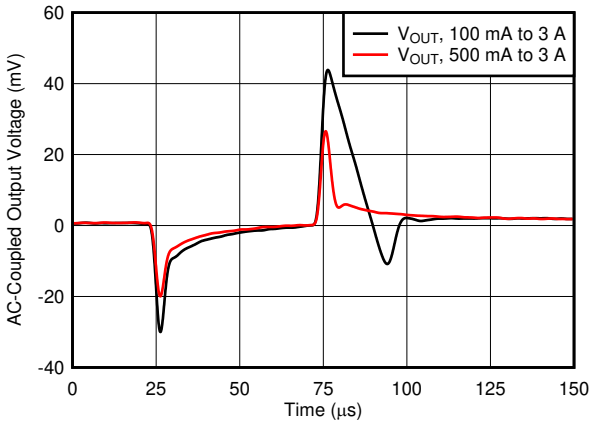

V_{IN} = 1.2 V, V_{BIAS} = 5.0 V, C_{OUT} = 47 µF || 10 µF || 10 µF, $C_{NR/SS}$ = C_{FF} = 10 nF, slew rate = 1 A/µs

図 19. Load Transient vs Time and DC Load (V_{OUT} = 0.9 V)

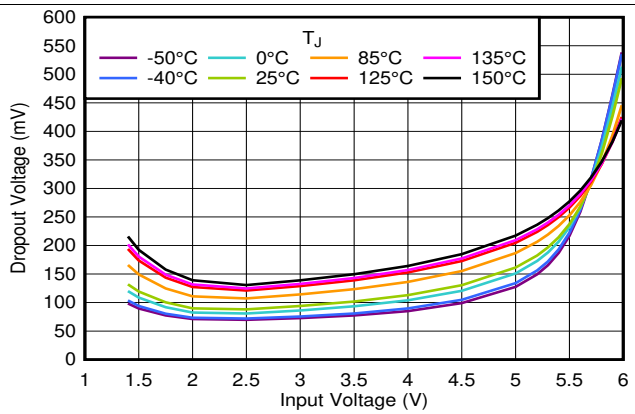

I_{OUT} = 4 A, V_{BIAS} = 0 V

図 20. Dropout Voltage vs Input Voltage Without Bias

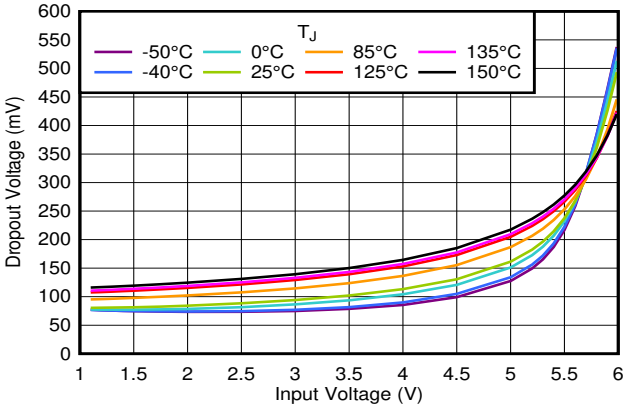

I_{OUT} = 4 A, V_{BIAS} = 5 V

図 21. Dropout Voltage vs Input Voltage With Bias

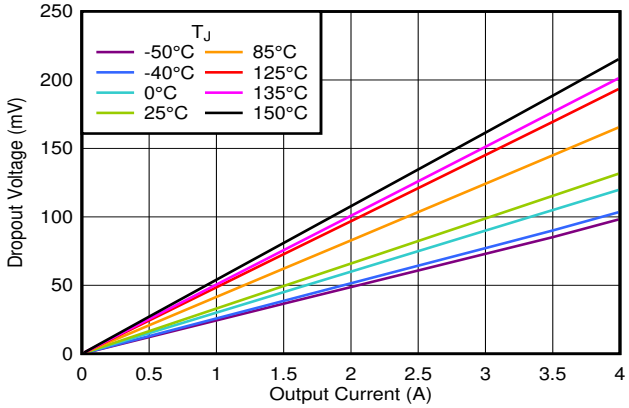

V_{IN} = 1.4 V, V_{BIAS} = 0 V

図 22. Dropout Voltage vs Output Current Without Bias

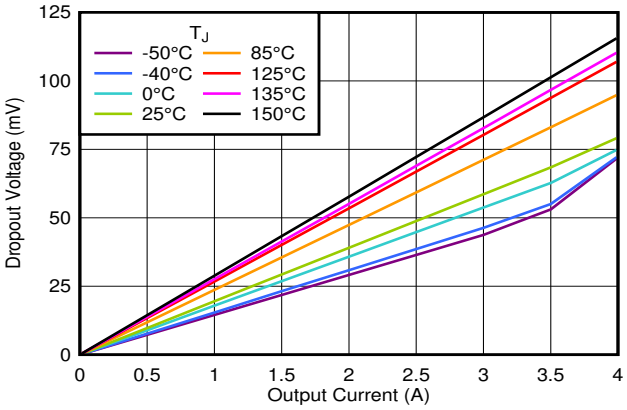

V_{IN} = 1.1 V, V_{BIAS} = 3 V

図 23. Dropout Voltage vs Output Current With Bias

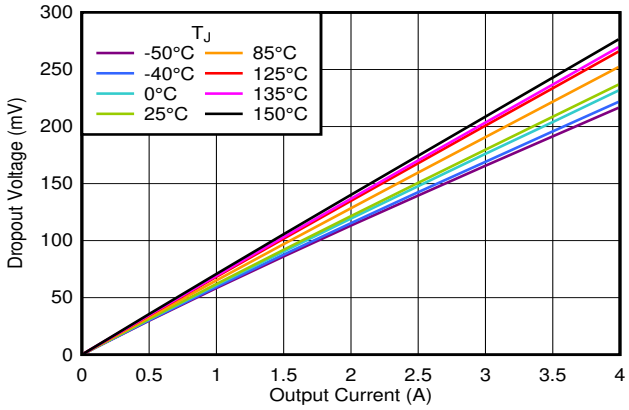

V_{IN} = 5.5 V

図 24. Dropout Voltage vs Output Current (High V_{IN})

Copyright © 2019–2020, Texas Instruments Incorporated

Typical Characteristics (continued)

at T_A = 25°C, V_{IN} = 1.4 V or V_{IN} = $V_{OUT(NOM)}$ + 0.4 V (whichever is greater), V_{BIAS} = open, $V_{OUT(NOM)}$ = 0.8 V, V_{EN} = 1.1 V, C_{OUT} = 47 µF, $C_{NR/SS}$ = 0 nF, C_{FF} = 0 nF, and PG pin pulled up to V_{IN} with 100 kΩ (unless otherwise noted)

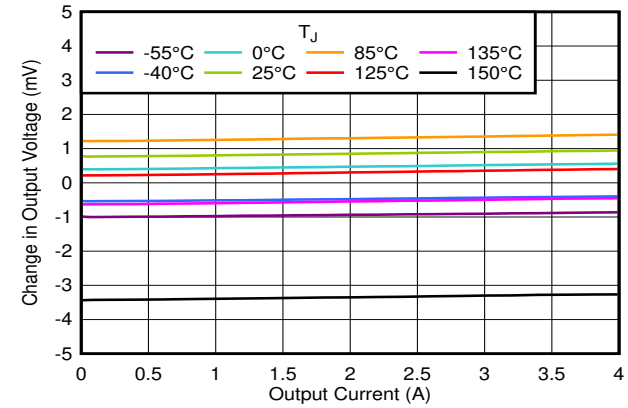

V_{IN} = 1.1 V, V_{BIAS} = 5 V

図 25. Load Regulation With Bias

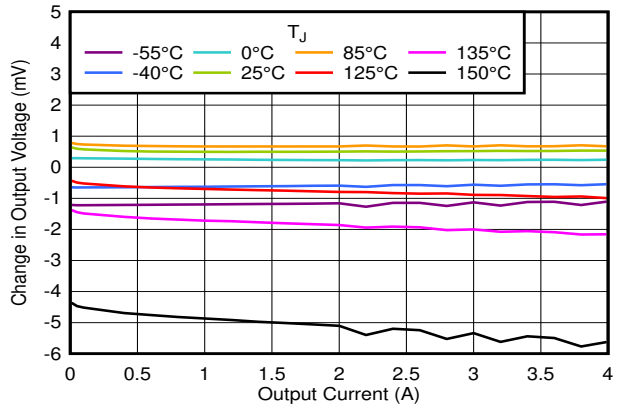

V_{IN} = 1.4 V, V_{BIAS} = 0 V

図 26. Load Regulation Without Bias

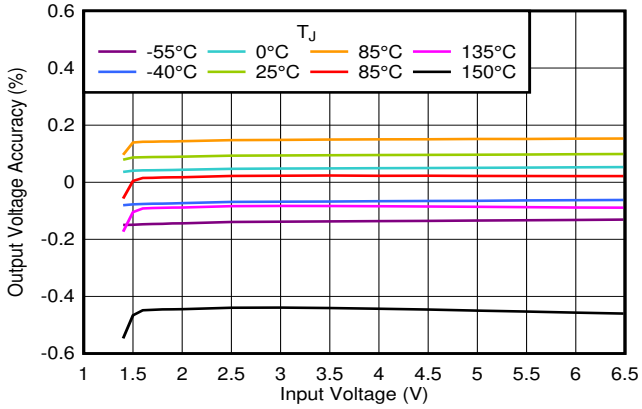

V_{OUT} = 0.8 V, V_{BIAS} = 0 V, I_{OUT} = 5 mA

図 27. Line Regulation Without Bias

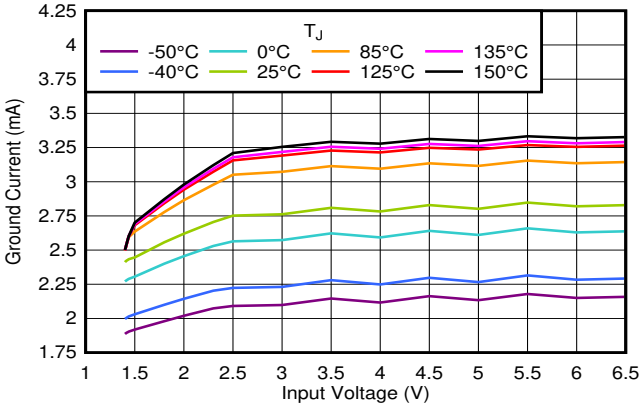

V_{BIAS} = 0 V, I_{OUT} = 5 mA

図 28. Quiescent Current vs Input Voltage

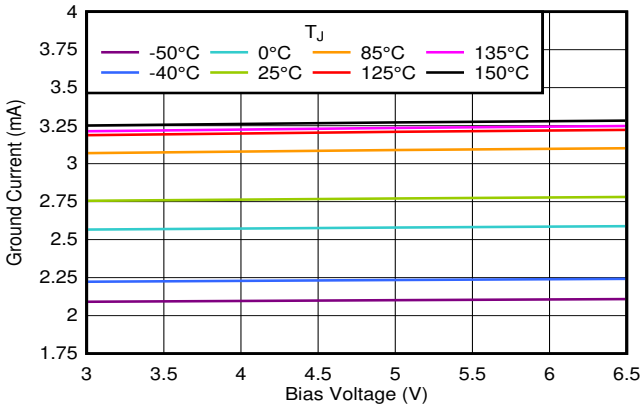

V_{IN} = 1.1 V, I_{OUT} = 5 mA

図 29. Quiescent Current vs Bias Voltage

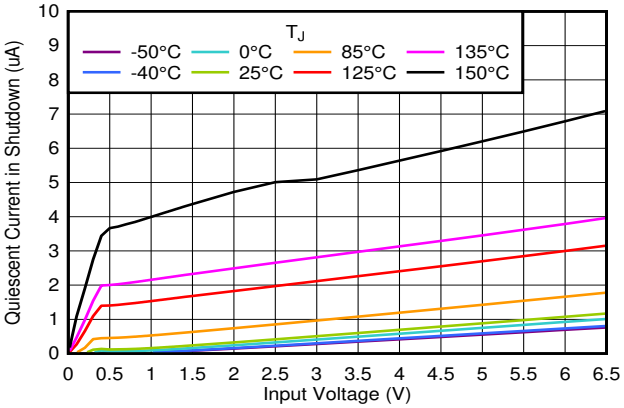

V_{BIAS} = 0 V

図 30. Shutdown Current vs Input Voltage

Typical Characteristics (continued)

at T_A = 25°C, V_{IN} = 1.4 V or V_{IN} = $V_{OUT(NOM)}$ + 0.4 V (whichever is greater), V_{BIAS} = open, $V_{OUT(NOM)}$ = 0.8 V, V_{EN} = 1.1 V, C_{OUT} = 47 µF, $C_{NR/SS}$ = 0 nF, C_{FF} = 0 nF, and PG pin pulled up to V_{IN} with 100 kΩ (unless otherwise noted)

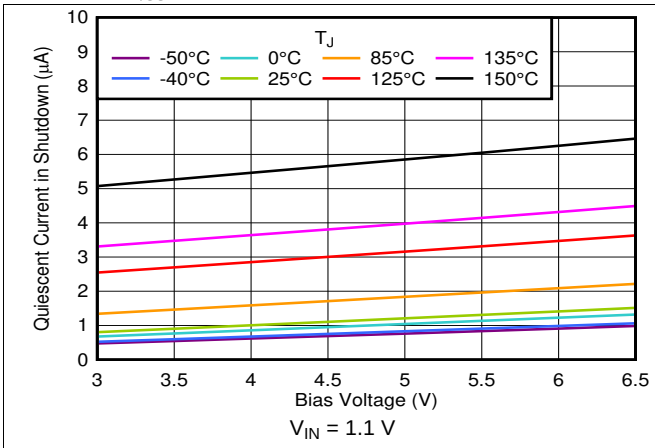

図 31. Shutdown Current vs Bias Voltage

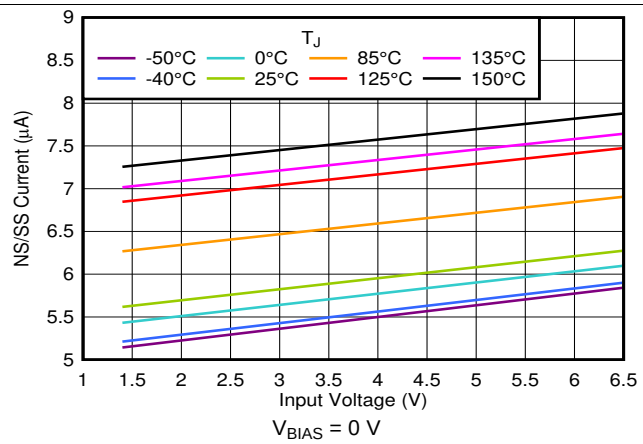

図 32. NR/SS Current vs Input Voltage and Temperature

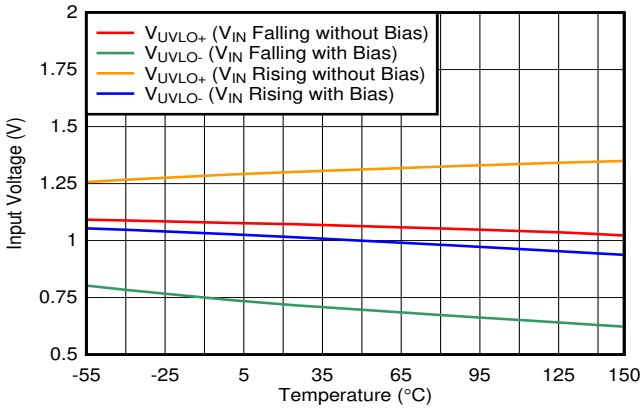

図 33. V_{IN} UVLO vs Temperature

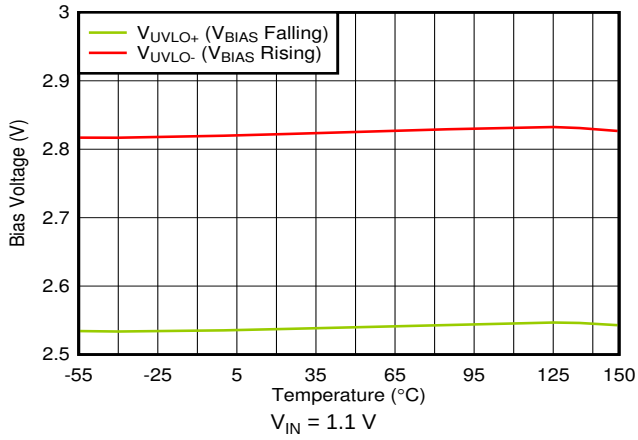

図 34. V_{BIAS} UVLO vs Temperature

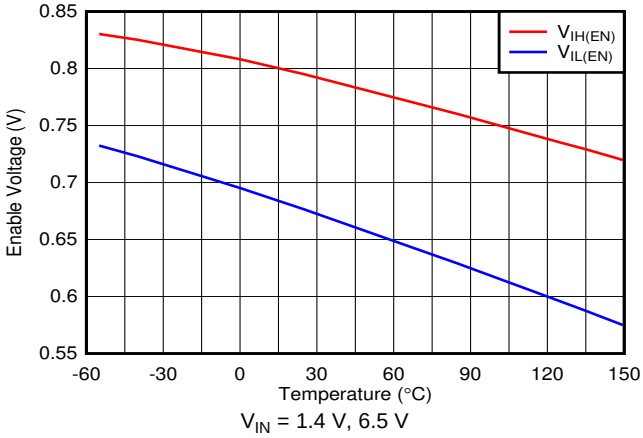

図 35. Enable Threshold vs Temperature

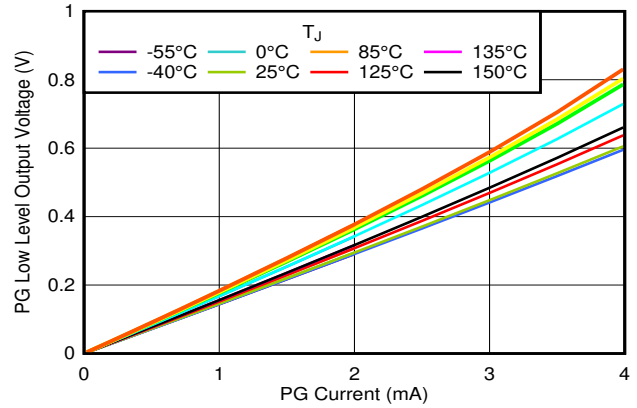

図 36. PG Voltage vs PG Current Sink

Copyright © 2019–2020, Texas Instruments Incorporated

Typical Characteristics (continued)

at T_A = 25°C, V_{IN} = 1.4 V or V_{IN} = $V_{OUT(NOM)}$ + 0.4 V (whichever is greater), V_{BIAS} = open, $V_{OUT(NOM)}$ = 0.8 V, V_{EN} = 1.1 V, C_{OUT} = 47 µF, $C_{NR/SS}$ = 0 nF, C_{FF} = 0 nF, and PG pin pulled up to V_{IN} with 100 kΩ (unless otherwise noted)

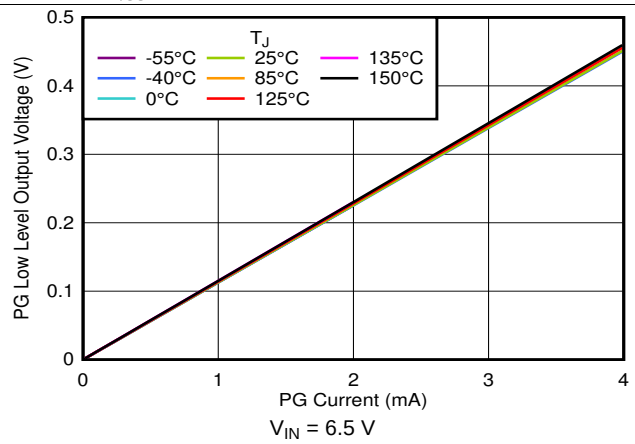

図 37. PG Voltage vs PG Current Sink

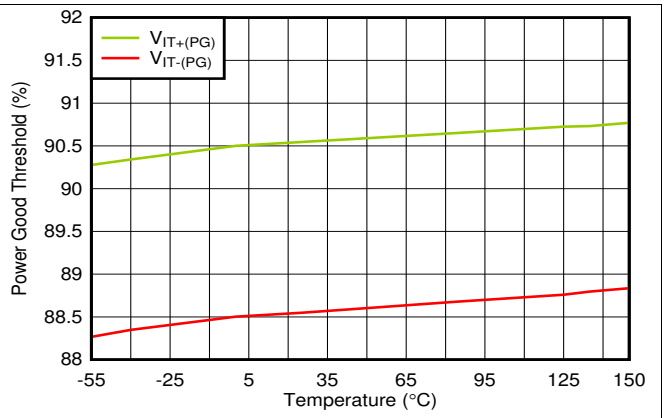

図 38. PG Threshold vs Temperature

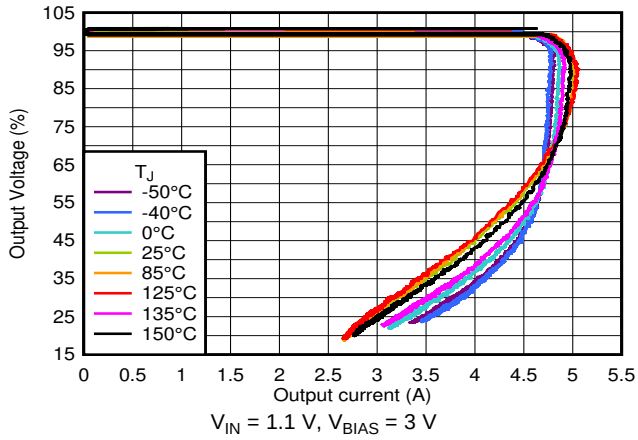

図 39. Foldback Current Limit vs Temperature

8 Detailed Description

8.1 Overview

The TPS7A54 is a high-current (4 A), low-noise (4.4 μV_{RMS}), high accuracy (1%) low-dropout linear voltage regulator with an input range of 1.1 V to 6.5 V and an output voltage range of 0.8 V to 5.1 V. The TPS7A54 has an integrated charge pump for ease of use, and an external bias rail to allow for the lowest dropout across the entire output voltage range. 表 1 categorizes the functions shown in the *Functional Block Diagram*. These features make the TPS7A54 a robust solution to solve many challenging problems by generating a clean, accurate power supply in a variety of applications.

表 1. Device Features

VOLTAGE REGULATION	SYSTEM START-UP	INTERNAL PROTECTION
High accuracy	Programmable soft start	Foldback current limit
Low-noise, high-PSRR output	No sequencing requirement between BIAS, IN, and EN	Thermal shutdown
Fast transient response	Power-good output	
	Start-up with negative bias on OUT	

8.2 Functional Block Diagram

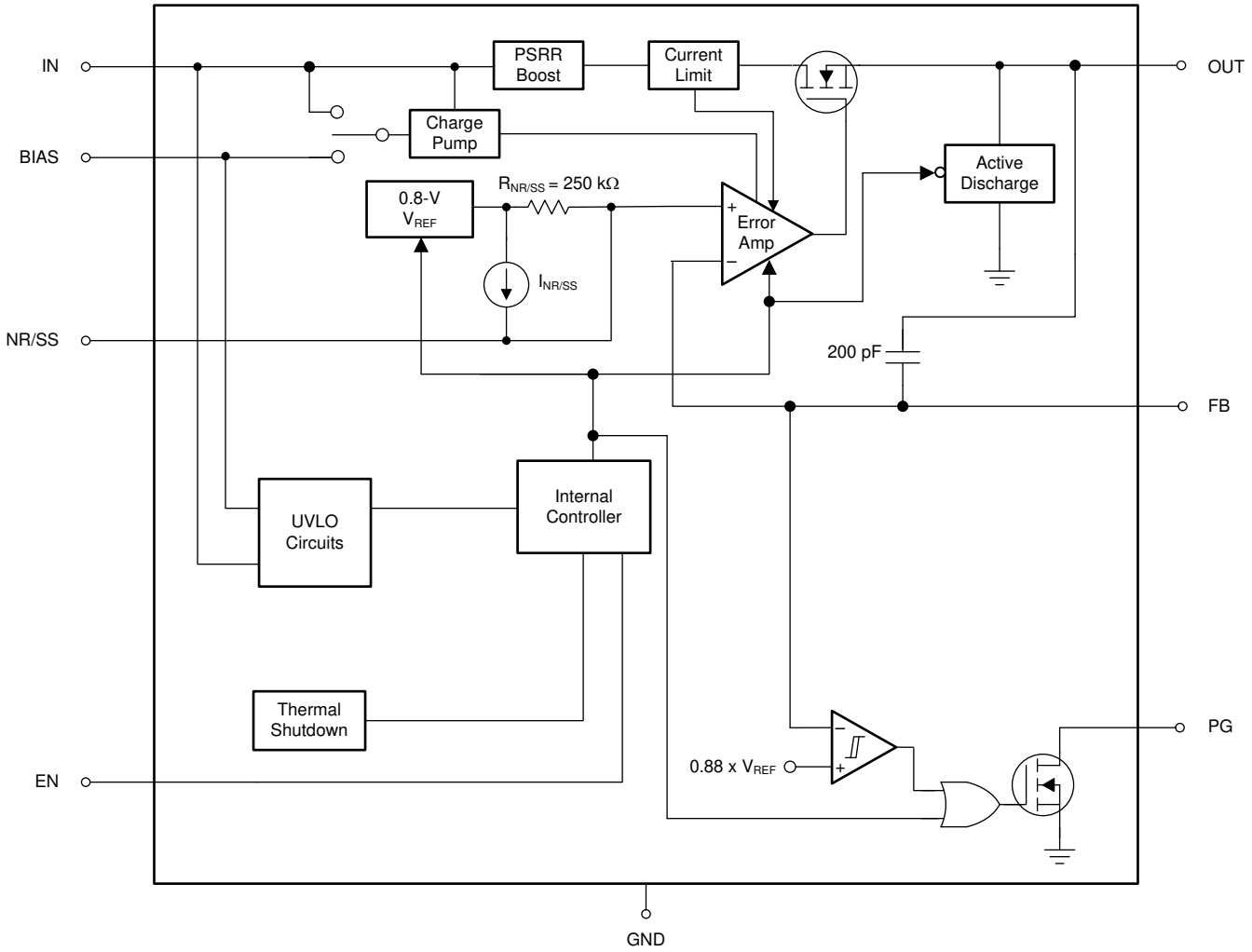

Copyright © 2019–2020, Texas Instruments Incorporated

8.3 Feature Description

8.3.1 Voltage Regulation Features

8.3.1.1 DC Regulation

An low-dropout regulator (LDO) functions as a class-B amplifier, as shown in 図 40, in which the input signal is the internal reference voltage (V_{REF}). V_{REF} is designed to have very-low bandwidth at the input to the error amplifier through the use of a low-pass filter ($V_{NR/SS}$).

As such, the reference can be considered as a pure dc input signal. The low output impedance of an LDO comes from the combination of the output capacitor and pass element. The pass element also presents a high input impedance to the source voltage when operating as a current source. A positive LDO can only source current because of the class-B architecture.

This device achieves a maximum of 1% output voltage accuracy primarily because of the high-precision band-gap voltage (V_{BG}) that creates V_{REF}. The low dropout voltage (V_{DO}) reduces the thermal power dissipation required by the device to regulate the output voltage at a given current level, thereby improving system efficiency. These features combine to make this device a good approximation of an ideal voltage source.

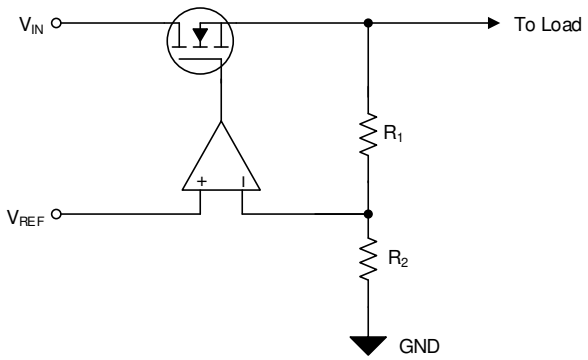

NOTE: $V_{OUT} = V_{REF} \times (1 + R_1 / R_2)$.

図 40. Simplified Regulation Circuit

8.3.1.2 AC and Transient Response

The LDO responds quickly to a transient (large-signal response) on the input supply (line transient) or the output current (load transient) resulting from the LDO high-input impedance and low output-impedance across frequency. This same capability also means that the LDO has a high power-supply rejection ratio (PSRR) and, when coupled with a low internal noise-floor (V_n), the LDO approximates an ideal power supply in ac (small-signal) and large-signal conditions.

The choice of external component values optimizes the small- and large-signal response. The NR/SS capacitor ($C_{NR/SS}$) and feed-forward capacitor (C_{FF}) easily reduce the device noise floor and improve PSRR.

Copyright © 2019–2020, Texas Instruments Incorporated

Feature Description (continued)

8.3.2 System Start-Up Features

In many different applications, the power-supply output must turn on within a specific window of time to either provide proper operation of the load or to minimize the loading on the input supply or other sequencing requirements. The LDO start-up is well-controlled and user-adjustable, solving the demanding requirements faced by many power-supply design engineers in a simple fashion.

8.3.2.1 Programmable Soft Start (NR/SS Pin)

Soft start directly controls the output start-up time and indirectly controls the output current during start-up (inrush current).

As shown in 図 41, the external capacitor at the NR/SS pin ($C_{NR/SS}$) sets the output start-up time by setting the rise time of the internal reference ($V_{NR/SS}$).

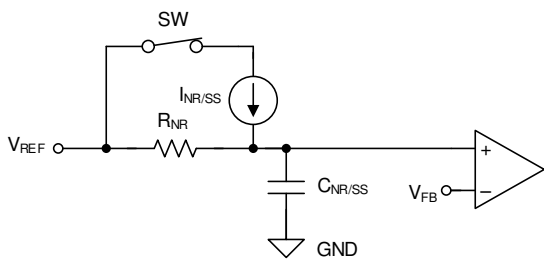

図 41. Simplified Soft-Start Circuit

8.3.2.2 Internal Sequencing

Controlling when a single power supply turns on can be difficult in a power distribution network (PDN) because of the high power levels inherent in a PDN, and the variations between all of the supplies. As shown in 図 42 and 表 2, the LDO turnon and turnoff time is set by the enable circuit (EN) and undervoltage lockout circuits ($UVLO_{1,2(IN)}$ and $UVLO_{BIAS}$).

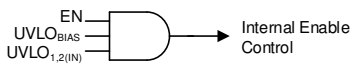

図 42. Simplified Turnon Control

表 2. Internal Sequencing Functionality Table

INPUT VOLTAGE	BIAS VOLTAGE	ENABLE STATUS	LDO STATUS	ACTIVE DISCHARGE	POWER GOOD
$V_{IN} \geq V_{UVLO_1,2(IN)}$	$V_{BIAS} \geq V_{UVLO(BIAS)}$	EN = 1	On	Off	PG = 1 when $V_{OUT} \geq V_{IT(PG)}$
		EN = 0	Off	On	PG = 0
	$V_{BIAS} < V_{UVLO(BIAS)} + V_{HYS(BIAS)}$	EN = don't care	Off	On(1)	
$V_{IN} < V_{UVLO_1,2(IN)} - V_{HYS1,2(IN)}$	BIAS = don't care		Off		
IN = don't care	$V_{BIAS} \geq V_{UVLO(BIAS)}$		Off		

(1) The active discharge remains on as long as V_{IN} or V_{BIAS} provide enough headroom for the discharge circuit to function.

V_{BIAS} is not intended to be used dynamically when the IN rail is being powered up. If the BIAS rail is powered down when the IN rail is greater than 1.4 V, the PG output can trip. If the BIAS rail is powered up after the IN rail for $V_{IN} \geq 1.4$ V, a non-monotonic startup can occur.

Copyright © 2019–2020, Texas Instruments Incorporated

8.3.2.2.1 Enable (EN)

The enable signal (V_{EN}) is an active-high digital control that enables the LDO when the enable voltage is past the rising threshold ($V_{EN} \geq V_{IH(EN)}$) and disables the LDO when the enable voltage is below the falling threshold ($V_{EN} \leq V_{IL(EN)}$). The exact enable threshold is between $V_{IH(EN)}$ and $V_{IL(EN)}$ because EN is a digital control. Connect EN to V_{IN} if enable functionality is not desired.

8.3.2.2.2 Undervoltage Lockout (UVLO) Control

The UVLO circuits respond quickly to glitches on IN or BIAS and attempts to disable the output of the device if either of these rails collapse.

8.3.2.2.3 Active Discharge

When either EN or UVLO are low, the device connects a resistor of several hundred ohms from V_{OUT} to GND, discharging the output capacitance.

Do not rely on the active discharge circuit for discharging large output capacitors when the input voltage drops below the targeted output voltage. Current flows from the output to the input (reverse current) when $V_{OUT} > V_{IN}$, which can cause damage to the device (when $V_{OUT} > V_{IN} + 0.3$ V).

8.3.2.3 Power-Good Output (PG)

The PG signal provides an easy solution to meet demanding sequencing requirements because PG signals when the output nears its nominal value. PG can be used to signal other devices in a system when the output voltage is near, at, or above the set output voltage ($V_{OUT(nom)}$). 図 43 shows a simplified schematic.

The PG signal is an open-drain digital output that requires a pullup resistor to a voltage source and is active high. The PG circuit sets the PG pin into a high-impedance state to indicate that the power is good.

Using a large feed-forward capacitor (C_{FF}) delays the output voltage and, because the PG circuit monitors the FB pin, the PG signal can indicate a false positive.

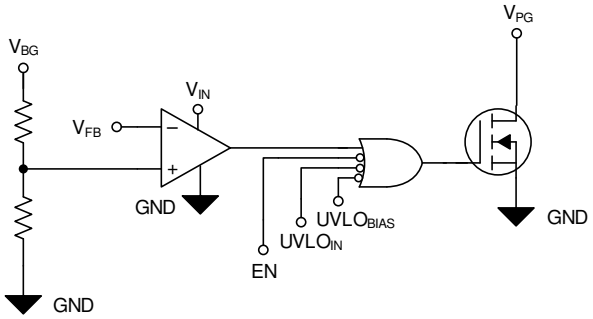

図 43. Simplified PG Circuit

8.3.3 Internal Protection Features

In many applications, fault events can occur that damage devices in the system. Short circuits and excessive heat are the most common fault events for power supplies. The TPS7A54 implements circuitry to protect the device and its load during these events. Continuously operating in these fault conditions or above a junction temperature of 140°C is not recommended because the long-term reliability of the device is reduced.

8.3.3.1 Foldback Current Limit (I_{CL})

The internal current limit circuit is used to protect the LDO against high load-current faults or shorting events. During a current-limit event, the LDO sources constant current; therefore, the output voltage falls with decreased load impedance. Thermal shutdown can activate during a current-limit event because of the high power dissipation typically found in these conditions. For proper operation of the current limit, minimize the inductances to the input and load. Continuous operation in current limit is not recommended.

8.3.3.2 Thermal Protection (T_{sd})

The thermal shutdown circuit protects the LDO against excessive heat in the system, either resulting from current limit or high ambient temperature.

The output of the LDO turns off when the LDO temperature (junction temperature, T_J) exceeds the rising thermal shutdown temperature. The output turns on again after T_J decreases below the falling thermal shutdown temperature.

A high power dissipation across the device, combined with a high ambient temperature (T_A), can cause T_J to be greater than or equal to T_{sd}, triggering the thermal shutdown and causing the output to fall to 0 V. The LDO can cycle on and off when thermal shutdown is reached under these conditions.

8.4 Device Functional Modes

表 3 provides a quick comparison between the regulation and disabled operation.

表 3. Device Functional Modes Comparison

OPERATING MODE	PARAMETER				
	V_{IN}	V_{BIAS}	EN	I_{OUT}	T_J
Regulation (1)	$V_{IN} > V_{OUT(nom)} + V_{DO}$	$V_{BIAS} \geq V_{UVLO(BIAS)}$ (2)	$V_{EN} > V_{IH(EN)}$	$I_{OUT} < I_{CL}$	$T_J \leq T_{J(maximum)}$
Disabled (3)	$V_{IN} < V_{UVLO_1,2(IN)}$	$V_{BIAS} < V_{UVLO(BIAS)}$	$V_{EN} < V_{IL(EN)}$	—	$T_J > T_{sd}$

(1) All table conditions must be met.
(2) V_{BIAS} is only required for V_{IN} < 1.4 V.
(3) The device is disabled when any condition is met.

8.4.1 Regulation

The device regulates the output to the nominal output voltage when all conditions in 表 3 are met.

8.4.2 Disabled

When disabled, the pass device is turned off, the internal circuits are shut down, and the output voltage is actively discharged to ground by an internal resistor from the output to ground. See the *Active Discharge* section for additional information.

8.4.3 Current Limit Operation

During a current-limit event, the LDO regulates the output current instead of the output voltage; therefore, the output voltage falls with decreased load impedance.

Copyright © 2019–2020, Texas Instruments Incorporated

9 Application and Implementation

注

Information in the following applications sections is not part of the TI component specification, and TI does not warrant its accuracy or completeness. TI's customers are responsible for determining suitability of components for their purposes. Customers should validate and test their design implementation to confirm system functionality.

9.1 Application Information

Successfully implementing an LDO in an application depends on the application requirements. This section discusses key device features and how to best implement them to achieve a reliable design.

9.1.1 Recommended Capacitor Types

The TPS7A54 is designed to be stable using low equivalent series resistance (ESR) ceramic capacitors at the input, output, and noise-reduction pin (NR, pin 13). Multilayer ceramic capacitors have become the industry standard for these types of applications and are recommended, but must be used with good judgment. Ceramic capacitors that employ X7R-, X5R-, and COG-rated dielectric materials provide relatively good capacitive stability across temperature. The use of Y5V-rated capacitors is discouraged because of large variations in capacitance.

Regardless of the ceramic capacitor type selected, ceramic capacitance varies with operating voltage and temperature. Make sure to derate ceramic capacitors by at least 50%. The input and output capacitors recommended herein account for a capacitance derating of approximately 50%, but at high V_{IN} and V_{OUT} conditions (V_{IN} = 5.5 V to V_{OUT} = 5.0 V), the derating can be greater than 50%, and must be taken into consideration.

9.1.1.1 Input and Output Capacitor Requirements (C_{IN} and C_{OUT})

The TPS7A54 is designed and characterized for operation with ceramic capacitors of 47 µF or greater (22 µF or greater of capacitance) at the output and 10 µF or greater (5 µF or greater of capacitance) at the input. Use at least a 47-µF capacitor at the input to minimize input impedance. Place the input and output capacitors as near as practical to the respective input and output pins in order to minimize trace parasitics. If the trace inductance from the input supply to the TPS7A54 is high, a fast current transient can cause V_{IN} to ring above the absolute maximum voltage rating and damage the device. This situation can be mitigated by additional input capacitors to dampen and keep the ringing below the device absolute maximum ratings.

A combination of multiple output capacitors boosts the high-frequency PSRR. The combination of one 0805-sized, 47-µF ceramic capacitor in parallel with two 0805-sized, 10-µF ceramic capacitors with a sufficient voltage rating, in conjunction with the PSRR boost circuit, optimizes PSRR for the frequency range of 400 kHz to 700 kHz, a typical range for dc/dc supply switching frequency. This 47-µF || 10-µF || 10-µF capacitor combination also makes certain that at high input voltage and high output voltage configurations, the minimum effective capacitance is met. Many 0805-sized, 47-µF ceramic capacitors have a voltage derating of approximately 60% to 80% at 5.0 V, so the addition of the two 10-µF capacitors makes sure that the capacitance is at or above 22 µF.

Copyright © 2019–2020, Texas Instruments Incorporated

Application Information (continued)

9.1.1.2 Noise-Reduction and Soft-Start Capacitor ($C_{NR/SS}$)

The TPS7A54 features a programmable, monotonic, voltage-controlled soft start that is set with an external capacitor ($C_{NR/SS}$). Use an external $C_{NR/SS}$ to minimize inrush current into the output capacitors. This soft-start feature eliminates power-up initialization problems when powering field-programmable gate arrays (FPGAs), digital signal processors (DSPs), or other processors. The controlled voltage ramp of the output also reduces peak inrush current during start-up, minimizing start-up transients to the input power bus.

To achieve a monotonic start-up, the TPS7A54 error amplifier tracks the voltage ramp of the external soft-start capacitor until the voltage approaches the internal reference. The soft-start ramp time depends on the soft-start charging current ($I_{NR/SS}$), the soft-start capacitance ($C_{NR/SS}$), and the internal reference ($V_{NR/SS}$). Use 式 1 to calculate the soft-start ramp time:

$$t_{SS} = (V_{NR/SS} \times C_{NR/SS}) / I_{NR/SS} \quad (1)$$

$I_{NR/SS}$ is provided in the *Electrical Characteristics* table and has a typical value of 6.2 µA.

The noise-reduction capacitor, in conjunction with the noise-reduction resistor, forms a low-pass filter (LPF) that filters out the noise from the reference before being gained up with the error amplifier, thereby reducing the device noise floor. The LPF is a single-pole filter and 式 2 can calculate the cutoff frequency. The typical value of R_{NR} is 250 kΩ. Increasing the $C_{NR/SS}$ capacitor has a greater affect because the output voltage increases when the noise from the reference is gained up even more at higher output voltages. For low-noise applications, a 10-nF to 1-µF $C_{NR/SS}$ is recommended.

$$f_{cutoff} = 1 / (2 \times \pi \times R_{NR} \times C_{NR/SS}) \quad (2)$$

9.1.1.3 Feed-Forward Capacitor (C_{FF})

Although a feed-forward capacitor (C_{FF}) from the FB pin to the OUT pin is not required to achieve stability, a 10-nF external feed-forward capacitor optimizes the transient, noise, and PSRR performance. A higher capacitance C_{FF} can be used; however, the start-up time is longer and the power-good signal can incorrectly indicate that the output voltage is settled. For a detailed description, see the *Pros and Cons of Using a Feed-Forward Capacitor with a Low Dropout Regulator* application report.

9.1.2 Soft Start and Inrush Current

Soft start refers to the ramp-up characteristic of the output voltage during LDO turnon after EN and UVLO achieve threshold voltage. The noise-reduction capacitor serves a dual purpose of both governing output noise reduction and programming the soft-start ramp during turnon.

Inrush current is defined as the current into the LDO at the IN pin during start-up. Inrush current then consists primarily of the sum of load current and the current used to charge the output capacitor. This current is difficult to measure because the input capacitor must be removed, which is not recommended. However, 式 3 can estimate this soft-start current:

$$I_{OUT(t)} = \left[\frac{C_{OUT} \times dV_{OUT}(t)}{dt}\right] + \left[\frac{V_{OUT}(t)}{R_{LOAD}}\right]$$

where:

- $V_{OUT}(t)$ is the instantaneous output voltage of the turnon ramp
- $dV_{OUT}(t) / dt$ is the slope of the V_{OUT} ramp
- R_{LOAD} is the resistive load impedance (3)

Copyright © 2019–2020, Texas Instruments Incorporated

Application Information (continued)

9.1.3 Optimizing Noise and PSRR

Improve the ultra-low noise floor and PSRR of the device by careful selection of:

- $C_{NR/SS}$ for the low-frequency range
- C_{FF} in the midband frequency range
- C_{OUT} for the high-frequency range
- $V_{IN} – V_{OUT}$ for all frequencies, and
- V_{BIAS} at lower input voltages

A larger noise-reduction capacitor improves low-frequency PSRR by filtering any noise coupling from the input into the reference. To improve midband PSRR, use the feed-forward capacitor to place a zero-pole pair near the edge of the loop bandwidth and push out the loop bandwidth. Use larger output capacitors to improve high-frequency PSRR.

A higher input voltage improves PSRR by giving the device more headroom to respond to noise on the input. A bias rail also improves PSRR at lower input voltages because greater headroom is provided for the internal circuits.

The noise-reduction capacitor filters out low-frequency noise from the reference, and the feed-forward capacitor reduces output voltage noise by filtering out midband frequency noise. However, a large feed-forward capacitor can create new issues that are discussed in the *Pros and Cons of Using a Feed-Forward Capacitor with a Low Dropout Regulator* application report.

Use a large output capacitor to reduce high-frequency output voltage noise. Additionally, a bias rail or higher input voltage improves noise because greater headroom is provided for the internal circuits.

表 4 lists the output voltage noise for the 10-Hz to 100-kHz band at a 5.0-V output for a variety of conditions with an input voltage of 5.5 V, an R_1 of 12.1 kΩ, and a load current of 4 A. The 5.0-V output is used because this output is the worst-case condition for output voltage noise.

表 4. Output Noise Voltage at a 5.0-V Output

OUTPUT VOLTAGE NOISE (μV_{RMS})	$C_{NR/SS}$ (nF)	C_{FF} (nF)	C_{OUT} (µF)
11.7	10	10	47 || 10 || 10
7.7	100	10	47 || 10 || 10
6	100	100	47 || 10 || 10
7.4	100	10	1000
5.8	100	100	1000

9.1.4 Charge Pump Noise

The device internal charge pump generates a minimal amount of noise. Use a bias rail to minimize the internal charge pump noise when the internal voltage is clamped, thereby reducing the overall output noise floor.

The high-frequency components of the output voltage noise density curve are filtered out in most applications by using 10-nF to 100-nF bypass capacitors close to the load. Using a ferrite bead between the LDO output and the load input capacitors forms a pi-filter, further reducing the high-frequency noise contribution.

9.1.5 Current Sharing

There are two main current sharing implementations:

1. Through the use of external operational amplifiers. For more details, see the *Current-Sharing Dual LDOs* and *6 A Current-Sharing Dual LDO* reference guides.
2. Through the use of external ballast resistors. For more details of this implementation, see the *High-Current Low-Noise Parallel LDO* reference guide.

9.1.6 Adjustable Operation

As shown in 図 44, the output voltage of the TPS7A54 is set using external resistors.

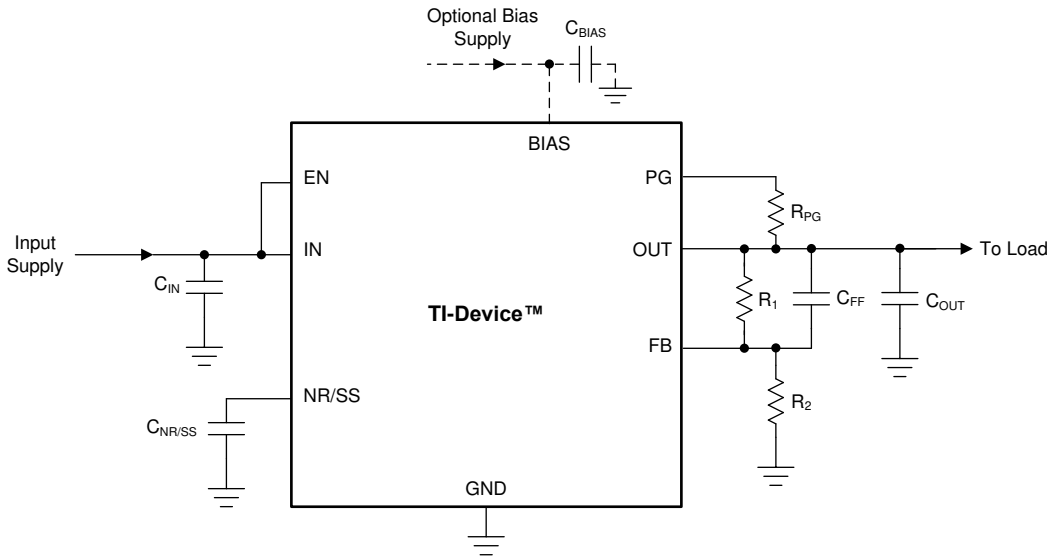

図 44. Typical Circuit

Use 式 4 to calculate R_1 and R_2. This resistive network must provide a current equal to or greater than 5 µA for dc accuracy. To optimize the noise and PSRR, use an R_1 of 12.1 kΩ.

$$V_{OUT} = V_{NR/SS} \times (1 + R_1 / R_2) \quad (4)$$

表 5 shows the resistor combinations required to achieve several common rails using standard 1%-tolerance resistors.

表 5. Recommended Feedback-Resistor Values

TARGETED OUTPUT VOLTAGE (V)	FEEDBACK RESISTOR VALUES(1)		CALCULATED OUTPUT VOLTAGE (V)
	R_1 (kΩ)	R_2 (kΩ)	
0.9	12.4	100	0.899
0.95	12.4	66.5	0.949
1.00	12.4	49.9	0.999
1.10	12.4	33.2	1.099
1.20	12.4	24.9	1.198
1.50	12.4	14.3	1.494
1.80	12.4	10	1.798
1.90	12.1	8.87	1.89
2.50	12.4	5.9	2.48
2.85	12.1	4.75	2.838
3.00	12.1	4.42	2.990
3.30	11.8	3.74	3.324
3.60	12.1	3.48	3.582
4.5	11.8	2.55	4.502
5.00	12.4	2.37	4.985

(1) R_1 is connected from OUT to FB; R_2 is connected from FB to GND.

Copyright © 2019–2020, Texas Instruments Incorporated

9.1.7 Power-Good Operation

For proper operation of the power-good circuit, the pullup resistor value must be between 10 kΩ and 100 kΩ. The lower limit of 10 kΩ results from the maximum pulldown strength of the power-good transistor, and the upper limit of 100 kΩ results from the maximum leakage current at the power-good node. If the pullup resistor is outside of this range, then the power-good signal may not read a valid digital logic level.

Using a large C_{FF} with a small $C_{NR/SS}$ causes the power-good signal to incorrectly indicate that the output voltage has settled during turnon. The C_{FF} time constant must be greater than the soft-start time constant for proper operation of the PG during start-up. For a detailed description, see the *Pros and Cons of Using a Feed-Forward Capacitor with a Low Dropout Regulator* application report.

The state of PG is only valid when the device operates above the minimum supply voltage. During short UVLO events and at light loads, power-good does not assert because the output voltage is sustained by the output capacitance.

9.1.8 Undervoltage Lockout (UVLO) Operation

The UVLO circuit makes sure that the device remains disabled before the input or bias supplies reach the minimum operational voltage range, and that the device shuts down when the input supply or bias supply falls too low.

The UVLO circuit has a minimum response time of several microseconds to fully assert. During this time, a downward line transient below approximately 0.8 V causes the UVLO to assert for a short time; however, the UVLO circuit does not have enough stored energy to fully discharge the internal circuits inside of the device. When the UVLO circuit does not fully discharge, the internal circuits of the output are not fully disabled.

The effect of the downward line transient can be mitigated by either using a larger input capacitor to limit the fall time of the input supply when operating near the minimum V_{IN}, or by using a bias rail.

図 45 shows the UVLO circuit response to various input voltage events. The diagram can be separated into the following regions:

- Region A: The device does not turn on until the input reaches the UVLO rising threshold.
- Region B: Normal operation with a regulated output.
- Region C: Brownout event above the UVLO falling threshold (UVLO rising threshold – UVLO hysteresis). The output may fall out of regulation but the device is still enabled.
- Region D: Normal operation with a regulated output.
- Region E: Brownout event below the UVLO falling threshold. The device is disabled in most cases and the output falls because of the load and active discharge circuit. The device is reenabled when the UVLO rising threshold is reached by the input voltage and a normal start-up then follows.
- Region F: Normal operation followed by the input falling to the UVLO falling threshold.
- Region G: The device is disabled when the input voltage falls below the UVLO falling threshold to 0 V. The output falls because of the load and active discharge circuit.

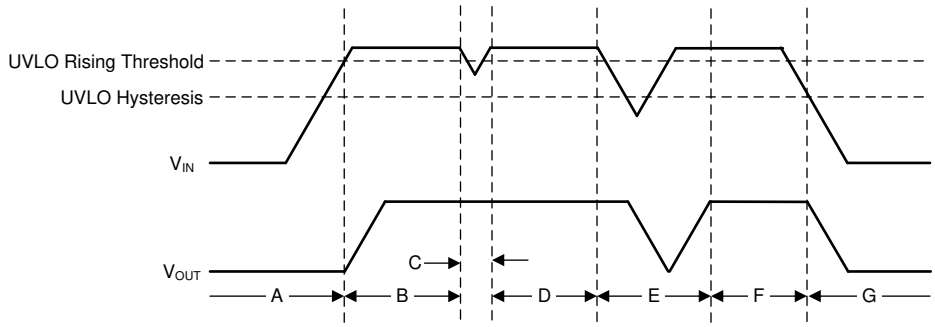

図 45. Typical UVLO Operation

9.1.9 Dropout Voltage (V_{DO})

Generally speaking, the dropout voltage often refers to the minimum voltage difference between the input and output voltage ($V_{DO} = V_{IN} – V_{OUT}$) that is required for regulation. When V_{IN} drops below the required V_{DO} for the given load current, the device functions as a resistive switch and does not regulate output voltage. Dropout voltage is proportional to the output current because the device is operating as a resistive switch.

Dropout voltage is affected by the drive strength for the gate of the pass element, which is nonlinear with respect to V_{IN} on this device because of the internal charge pump. The charge pump causes a higher dropout voltage at lower input voltages when a bias rail is not used.

For this device, dropout voltage increases exponentially when the input voltage nears its maximum operating voltage because the charge pump is internally clamped to 8.0 V.

9.1.10 Device Behavior During Transition From Dropout Into Regulation

Some applications have transients that place the device into dropout, especially with a device such as a high-current linear regulator. A typical application with these transient conditions may require setting $V_{IN} \leq (V_{OUT} + V_{DO})$ in order to keep the device junction temperature within the specified operating range. A load transient or line transient with these conditions can place the device into dropout; for example, a load transient from 1 A to 4 A at 1 A/µs when operating with a V_{IN} of 5.4 V and a V_{OUT} of 5.0 V.

The load transient saturates the error amplifier output stage when the gate of the pass element is driven as high as possible by the error amplifier, thus making the pass element function like a resistor from V_{IN} to V_{OUT}. The error amplifier response time to this load transient (I_{OUT} = 4 A to 1 A at 1 A/µs) is limited because the error amplifier must first recover from saturation, and then place the pass element back into active mode. During the recovery from the load transient, V_{OUT} overshoots because the pass element is functioning as a resistor from V_{IN} to V_{OUT}. If operating under these conditions, apply a higher dc load or increase the output capacitance in order to reduce the overshoot.

9.1.11 Load Transient Response

The load-step transient response is the output voltage response by the LDO to a step in load current, whereby output voltage regulation is maintained. There are two key transitions during a load transient response: the transition from a light to a heavy load, and the transition from a heavy to a light load. The regions shown in 図 46 are broken down in this section. Regions A, E, and H are where the output voltage is in steady-state regulation.

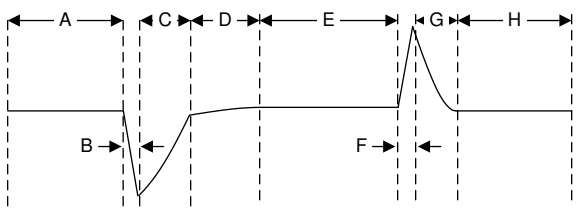

図 46. Load Transient Waveform

During transitions from a light load to a heavy load:

- Initial voltage dip is a result of the depletion of the output capacitor charge and parasitic impedance to the output capacitor (region B).
- Recovery from the dip results from the LDO increasing its sourcing current, and leads to output voltage regulation (region C).

During transitions from a heavy load to a light load:

- Initial voltage rise results from the LDO sourcing a large current, and leads to the output capacitor charge to increase (region F).
- Recovery from the rise results from the LDO decreasing its sourcing current in combination with the load discharging the output capacitor (region G).

Copyright © 2019–2020, Texas Instruments Incorporated

Transitions between current levels changes the internal power dissipation because the TPS7A54 is a high-current device (region D). The change in power dissipation changes the die temperature during these transitions, and leads to a slightly different voltage level. This different output voltage level shows up in the various load transient responses.

A larger output capacitance reduces the peaks during a load transient but slows down the response time of the device. A larger dc load also reduces the peaks because the amplitude of the transition is lowered and a higher current discharge path is provided for the output capacitor.

9.1.12 Reverse Current Protection Considerations

As with most LDOs, this device can be damaged by excessive reverse current.

Conditions where excessive reverse current can occur are outlined in this section, all of which can exceed the absolute maximum rating of $V_{OUT} > V_{IN} + 0.3$ V:

- If the device has a large C_{OUT}, then the input supply collapses quickly and the load current becomes very small
- The output is biased when the input supply is not established
- The output is biased above the input supply

If an excessive reverse current flow is expected in the application, then external protection must be used to protect the device. 図 47 shows one approach of protecting the device.

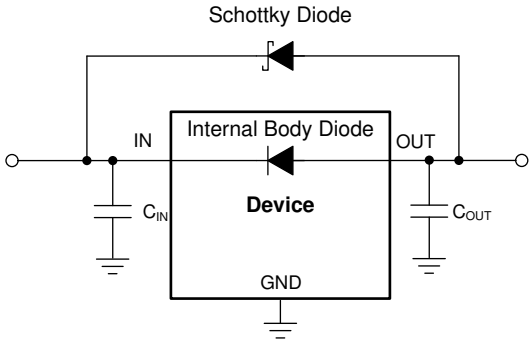

図 47. Example Circuit for Reverse Current Protection Using a Schottky Diode

9.1.13 Power Dissipation (P_D)

Circuit reliability demands that proper consideration be given to device power dissipation, location of the circuit on the printed circuit board (PCB), and correct sizing of the thermal plane. The PCB area around the regulator must be as free as possible of other heat-generating devices that cause added thermal stresses.

As a first-order approximation, power dissipation in the regulator depends on the input-to-output voltage difference and load conditions. 式 5 calculates P_D:

$$P_D = (V_{OUT} - V_{IN}) \times I_{OUT} \tag{5}$$

注

Power dissipation can be minimized, and thus greater efficiency achieved, by proper selection of the system voltage rails. Proper selection allows the minimum input-to-output voltage differential to be obtained. The low dropout of the TPS7A54 allows for maximum efficiency across a wide range of output voltages.

The primary heat conduction path for the package is through the thermal pad to the PCB. Solder the thermal pad to a copper pad area under the device. This pad area contains an array of plated vias that conduct heat to any inner plane areas or to a bottom-side copper plane.

The maximum power dissipation determines the maximum allowable junction temperature (T_J) for the device. Power dissipation and junction temperature are most often related by the junction-to-ambient thermal resistance ($R_{\theta JA}$) of the combined PCB and device package and the temperature of the ambient air (T_A), according to 式 6. The equation is rearranged for output current in 式 7.

$$T_J = T_A = (R_{\theta JA} \times P_D) \tag{6}$$

$$I_{OUT} = (T_J - T_A) / [R_{\theta JA} \times (V_{IN} - V_{OUT})] \tag{7}$$

Unfortunately, this thermal resistance ($R_{\theta JA}$) is highly dependent on the heat-spreading capability built into the particular PCB design, and therefore varies according to the total copper area, copper weight, and location of the planes. The $R_{\theta JA}$ recorded in the *Electrical Characteristics* table is determined by the JEDEC standard, PCB, and copper-spreading area, and is only used as a relative measure of package thermal performance. For a well-designed thermal layout, $R_{\theta JA}$ is actually the sum of the VQFN package junction-to-case (bottom) thermal resistance ($R_{\theta JCbot}$) plus the thermal resistance contribution by the PCB copper.

9.1.14 Estimating Junction Temperature

The JEDEC standard now recommends the use of psi (Ψ) thermal metrics to estimate the junction temperatures of the LDO when in-circuit on a typical PCB board application. These metrics are not strictly speaking thermal resistances, but rather offer practical and relative means of estimating junction temperatures. These psi metrics are determined to be significantly independent of the copper-spreading area. The key thermal metrics (Ψ_{JT} and Ψ_{JB}) are used in accordance with 式 8 and are given in the *Electrical Characteristics* table.

$$\Psi_{JT}: T_J = T_T + \Psi_{JT} \times P_D$$

$$\Psi_{JB}: T_J = T_B + \Psi_{JB} \times P_D$$

where:

- P_D is the power dissipated as explained in 式 5
- T_T is the temperature at the center-top of the device package
- T_B is the PCB surface temperature measured 1 mm from the device package and centered on the package edge (8)

Copyright © 2019–2020, Texas Instruments Incorporated

9.1.15 TPS7A54EVM Thermal Analysis

The TPS7A54EVM is used to develop the TPS7A5401RPS thermal model. The RPS package is a 2.2-mm × 2.5-mm, 12-pin VQFN with 25-µm plating on each via. The EVM is a 3-inch × 3-inch (7.62 mm × 7.62 mm) PCB comprised of four layers. 表 6 lists the layer stackup for the EVM. 図 48 to 図 52 illustrate the various layer details for the EVM.

表 6. Stackup

LAYER	NAME	MATERIAL	THICKNESS (mil)
1	Top overlay	—	—
2	Top solder	Solder resist	0.4
3	Top layer	Copper	1.4
4	Dielectric 1	FR-4 high Tg	18.5
5	Mid layer 1	Copper	1.4
6	Dielectric 2	FR-4 high Tg	18.6
7	Mid layer 2	Copper	1.4
8	Dielectric 3	FR-4 high Tg	18.5
9	Bottom layer	Copper	1.4
10	Bottom solder	Solder resist	0.4

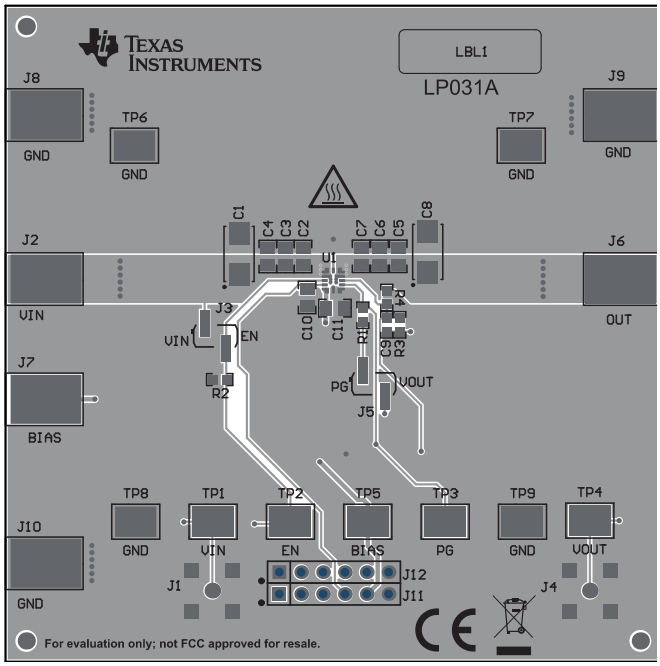

図 48. Top Composite View

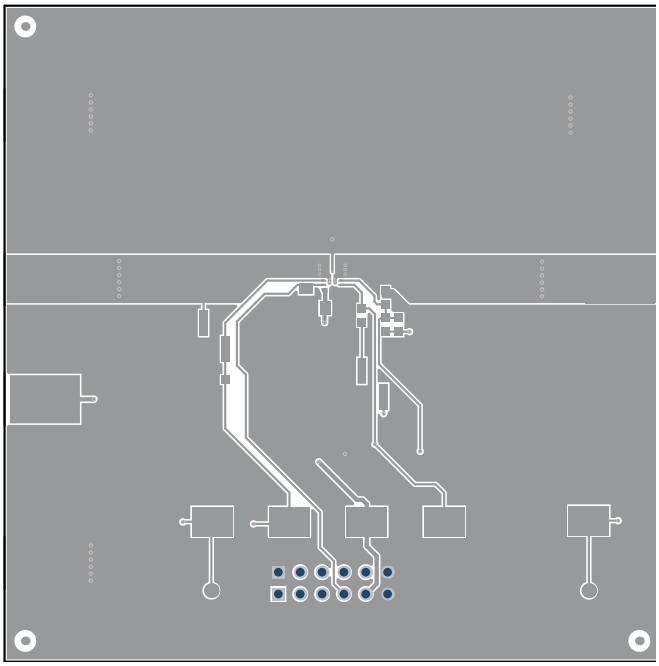

図 49. Top Layer Routing

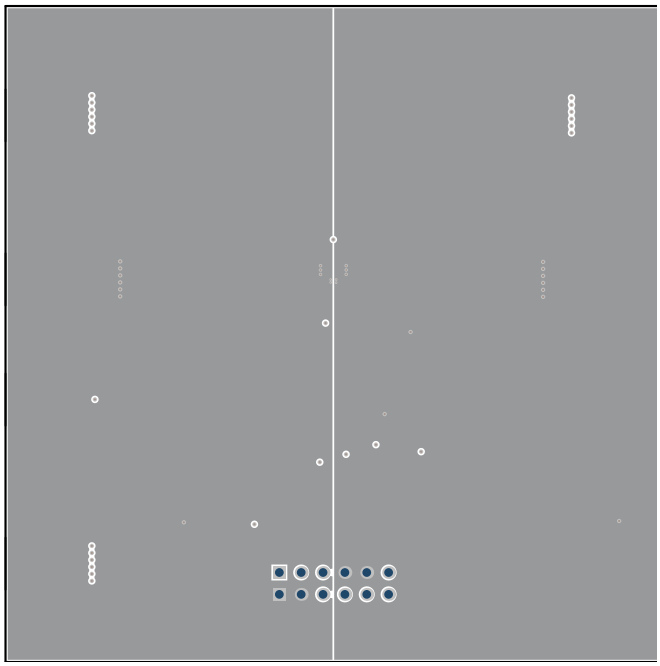

図 50. Mid Layer 1 Routing

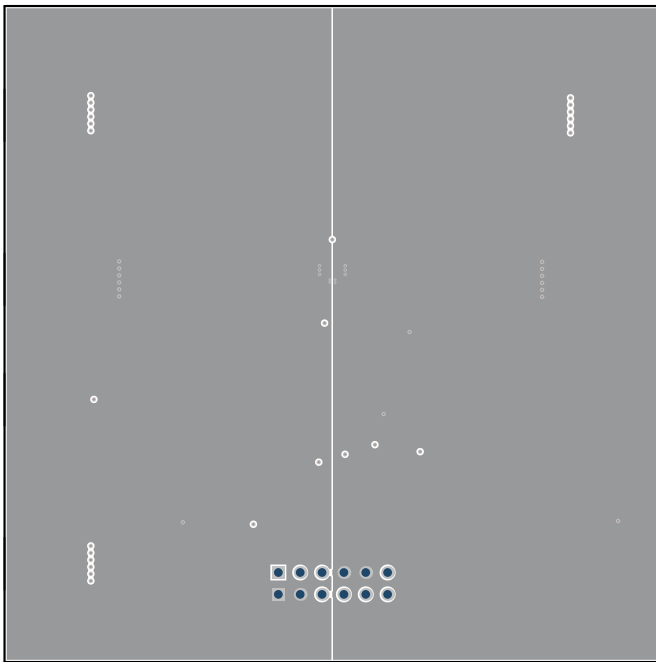

図 51. Mid Layer 2 Routing

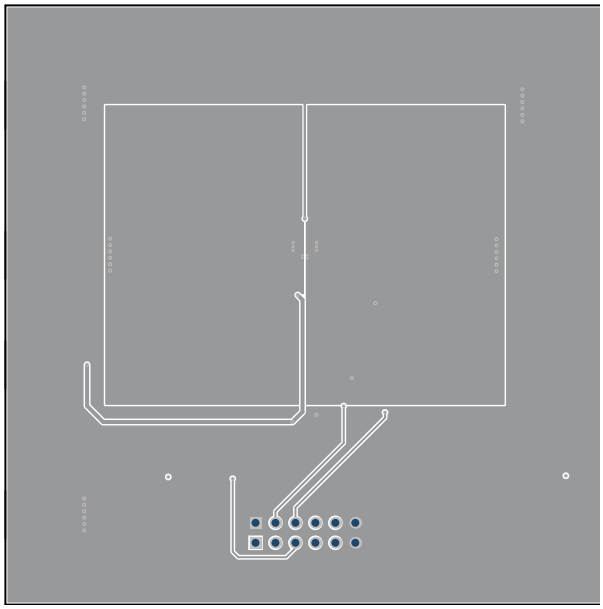

図 52. Bottom Layer Routing

Copyright © 2019–2020, Texas Instruments Incorporated

図 53 shows the thermal gradient on the PCB that results when a 1-W power dissipation is used through the PassFET with a 25°C ambient temperature.

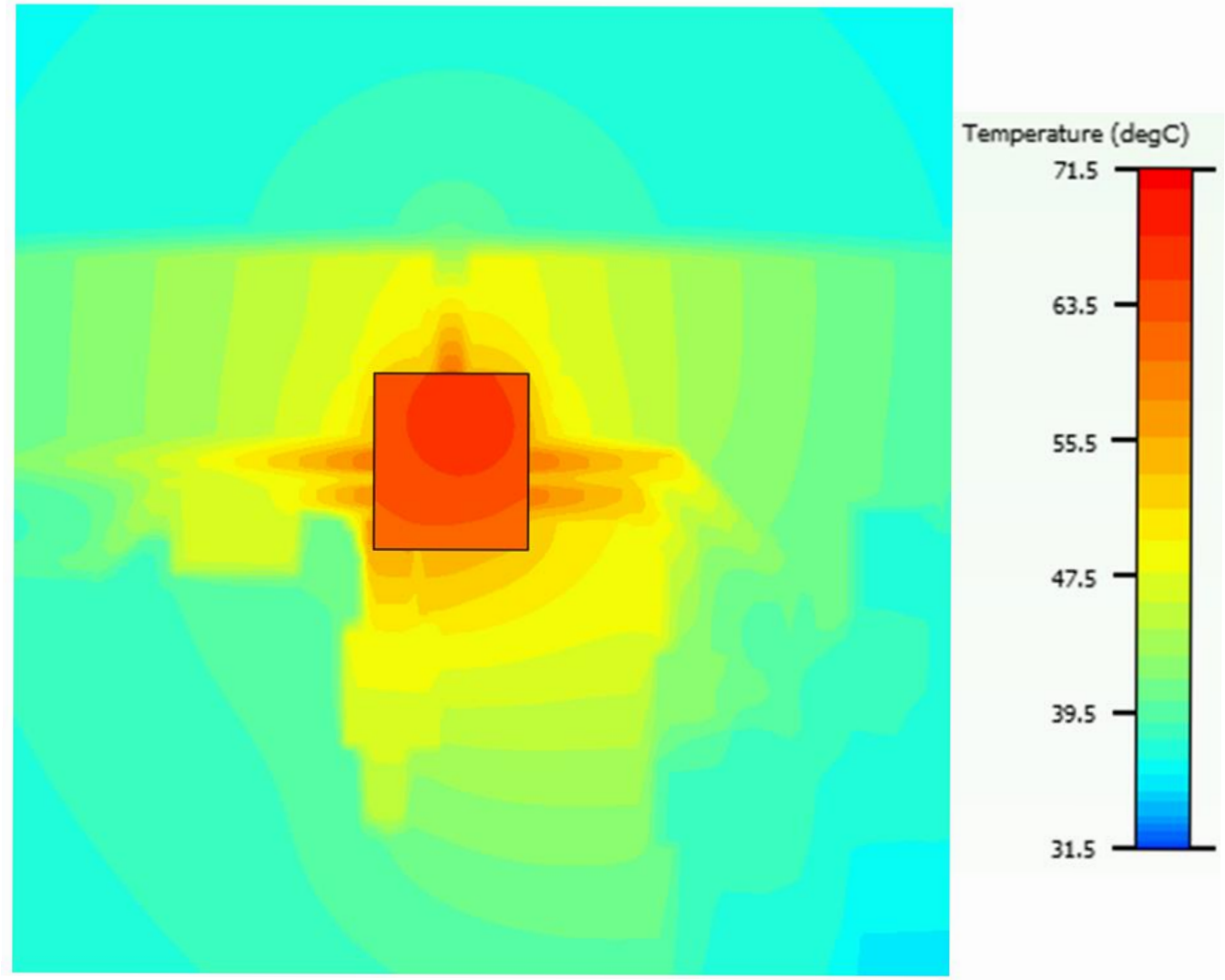

図 53. PCB Thermal Gradient

For additional information on the PCB, see the TPS7A54EVM user guide.

9.2 Typical Application

This section discusses the implementation of the TPS7A54 using an adjustable feedback network to regulate a 4-A load requiring good PSRR at high frequency with low-noise at an output voltage of 0.9 V. 図 54 provides a schematic for this typical application circuit.

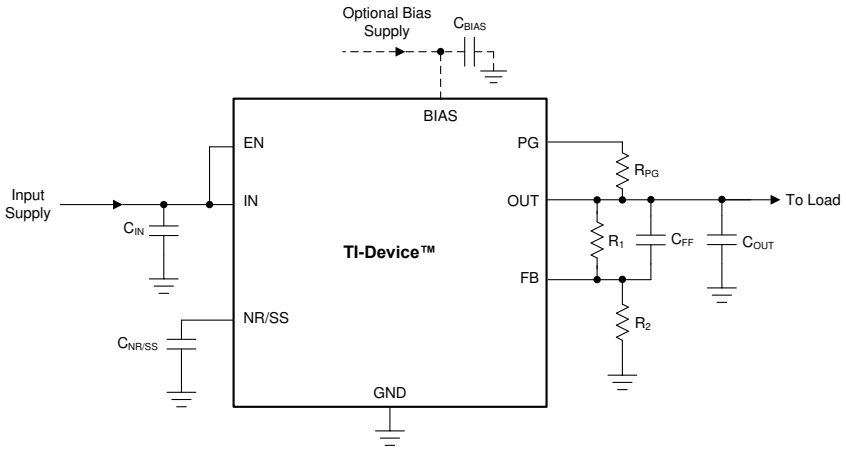

図 54. Typical Application for a 0.9-V Rail

9.2.1 Design Requirements

For this design example, use the parameters listed in 表 7 as the input parameters.

表 7. Design Parameters

PARAMETER	DESIGN REQUIREMENT
Input voltage	1.2 V, ±3%, provided by the dc/dc converter switching at 500 kHz
Bias voltage	5V, ±5%
Output voltage	0.9 V, ±1%
Output current	4.0 A (maximum), 100 mA (minimum)
RMS noise, 10 Hz to 100 kHz	< 10 μV_{RMS}
PSRR at 500 kHz	> 40 dB
Start-up time	< 25 ms

9.2.2 Detailed Design Procedure

At 4.0 A and 0.9 V_{OUT}, the dropout of the TPS7A54 has a 240-mV maximum dropout over temperature; thus, a 300-mV headroom is sufficient for operation over both input and output voltage accuracy. At full load and high temperature on some devices, the TPS7A54 can enter dropout if both the input and output supply are beyond the edges of the respective accuracy specification.

For a 0.9-V output. use external adjustable resistors. See the resistor values in listed 表 5 for choosing resistors for a 0.9 V output.

Input and output capacitors are selected in accordance with the *Recommended Capacitor Types* section. Ceramic capacitances of 47 µF for the input and one 47-µF capacitor in parallel with two 10-µF capacitors for the output are selected.

To satisfy the required start-up time and still maintain low noise performance, a 100-nF $C_{NR/SS}$ is selected. 式 9 calculates this value.

$$t_{SS} = (V_{NR/SS} \times C_{NR/SS}) / I_{NR/SS} \quad (9)$$

At the 4.0-A maximum load, the internal power dissipation is 1.2 W and corresponds to a 52°C junction temperature rise for the RPS package on a standard JEDEC board. With a 55°C maximum ambient temperature, the junction temperature is at 107.0°C. To further minimize noise, a feed-forward capacitance (C_{FF}) of 10 nF is selected.

Copyright © 2019–2020, Texas Instruments Incorporated

10 Power Supply Recommendations

The TPS7A54 is designed to operate from an input voltage supply range between 1.1 V and 6.5 V. If the input supply is less than 1.4 V, then a bias rail of at least 3.0 V must be used. The input voltage range provides adequate headroom in order for the device to have a regulated output. This input supply must be well regulated. If the input supply is noisy, use additional input capacitors with low ESR to help improve output noise performance.

11 Layout

11.1 Layout Guidelines

11.1.1 Board Layout

For best overall performance, place all circuit components on the same side of the circuit board and as near as practical to the respective LDO pin connections. Place ground return connections to the input and output capacitor, and to the LDO ground pin as close to each other as possible, connected by a wide, component-side, copper surface. To avoid negative system performance, do not use of vias and long traces to the input and output capacitors. The grounding and layout scheme illustrated in 図 55 minimizes inductive parasitics, and thereby reduces load-current transients, minimizes noise, and increases circuit stability.

To improve performance, use a ground reference plane, either embedded in the PCB itself or placed on the bottom side of the PCB opposite the components. This reference plane serves to assure accuracy of the output voltage, shield noise, and behaves similar to a thermal plane to spread (or sink) heat from the LDO device when connected to the thermal pad. In most applications, this ground plane is necessary to meet thermal requirements.

11.2 Layout Example

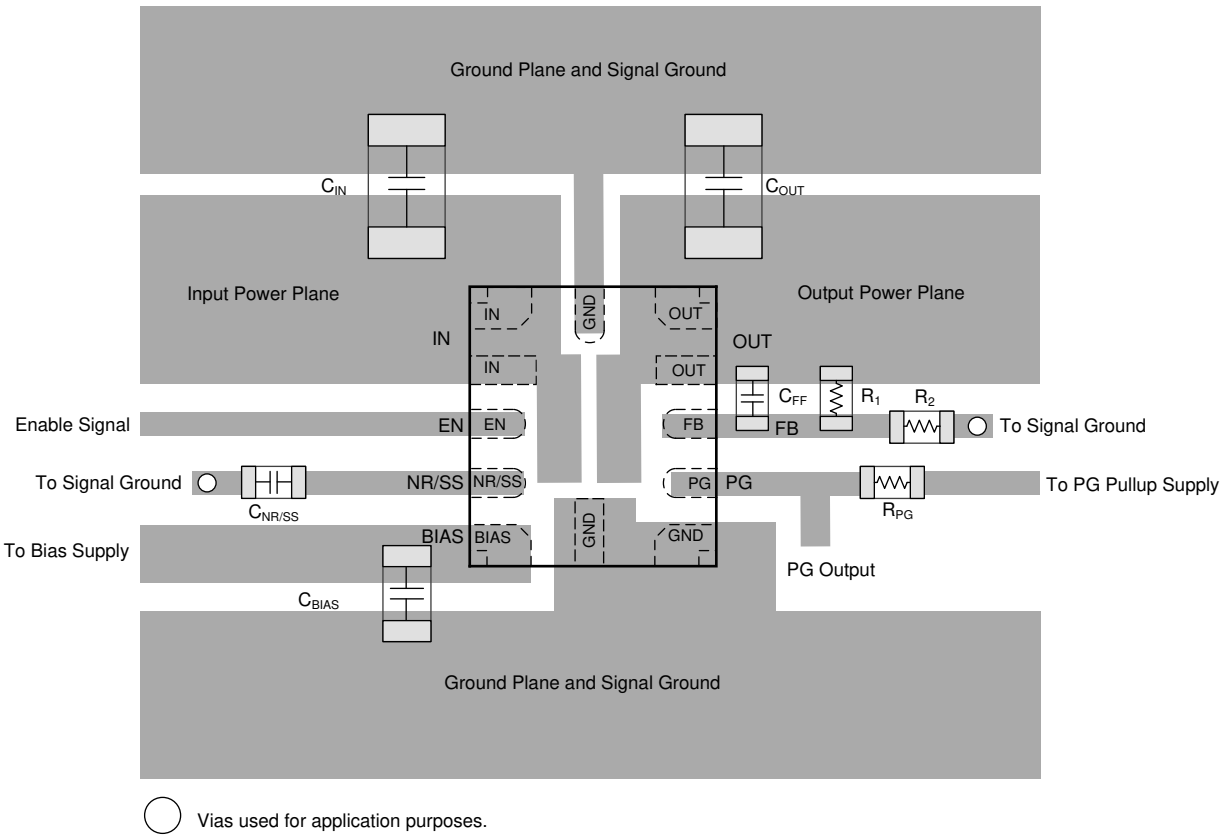

図 55. Example Layout

12 デバイスおよびドキュメントのサポート

12.1 デバイス・サポート

12.1.1 開発サポート

12.1.1.1 評価基板

TPS7A54 を使用する回路の性能の初期評価に役立てるため、評価基板 (EVM) を利用可能です。この機器の概要情報を、表 8に示します。

表 8. 設計キットと評価基板

名前	資料番号
TPS7A5401EVM-031 評価基板	SBVU056

この EVM は、テキサス・インスツルメンツの Web サイトの TPS7A54 製品フォルダで請求できます。

12.1.1.2 SPICEモデル

SPICEを使用した回路パフォーマンスのコンピュータによるシミュレーションは、アナログ回路やシステムのパフォーマンスを分析するため多くの場合に有用です。TPS7A54用のSPICEモデルは、TPS7A54製品フォルダの「シミュレーション・モデル」で入手できます。

12.1.2 デバイスの項目表記

表 9. 製品情報(1)

製品名	概要
TPS7A5401**YYYZ**	**YYY**はパッケージ指定子です。 **Z**はパッケージ数量です。

(1) 最新のパッケージと発注情報については、このデータシートの末尾にあるパッケージ・オプションの付録を参照するか、www.ti.comにあるデバイスの製品フォルダをご覧ください。

12.2 ドキュメントのサポート

12.2.1 関連資料

関連資料については、以下を参照してください。

- テキサス・インスツルメンツ、*『TPS3702 High-Accuracy, Overvoltage and Undervoltage Monitor』データシート* (英語)
- テキサス・インスツルメンツ、*『TPS7A54EVM-031 Evaluation Module』ユーザー・ガイド* (英語)
- テキサス・インスツルメンツ*『低ドロップアウト・レギュレータでフィードフォワード・コンデンサを使用することの長所と短所』アプリケーション・レポート*
- テキサス・インスツルメンツ、*『6A Current-Sharing Dual LDO』リファレンス・ガイド* (英語)
- テキサス・インスツルメンツ、*『大電流、低ノイズのパラレル LDO のリファレンス・デザイン』*

12.3 ドキュメントの更新通知を受け取る方法

ドキュメントの更新についての通知を受け取るには、ti.comのデバイス製品フォルダを開いてください。右上の「アラートを受け取る」をクリックして登録すると、変更されたすべての製品情報に関するダイジェストを毎週受け取れます。変更の詳細については、修正されたドキュメントに含まれている改訂履歴をご覧ください。

12.4 コミュニティ・リソース

TI E2E™ support forums are an engineer's go-to source for fast, verified answers and design help — straight from the experts. Search existing answers or ask your own question to get the quick design help you need.

Linked content is provided "AS IS" by the respective contributors. They do not constitute TI specifications and do not necessarily reflect TI's views; see TI's Terms of Use.

Copyright © 2019–2020, Texas Instruments Incorporated

12.5 商標

E2E is a trademark of Texas Instruments.
All other trademarks are the property of their respective owners.

12.6 静電気放電に関する注意事項

すべての集積回路は、適切なESD保護方法を用いて、取扱いと保存を行うようにして下さい。

静電気放電はわずかな性能の低下から完全なデバイスの故障に至るまで、様々な損傷を与えます。高精度の集積回路は、損傷に対して敏感であり、極めてわずかなパラメータの変化により、デバイスに規定された仕様に適合しなくなる場合があります。

12.7 Glossary

SLYZ022 — *TI Glossary*.

This glossary lists and explains terms, acronyms, and definitions.

13 メカニカル、パッケージ、および注文情報

以降のページには、メカニカル、パッケージ、および注文に関する情報が記載されています。この情報は、そのデバイスについて利用可能な最新のデータです。このデータは予告なく変更されることがあり、ドキュメントが改訂される場合もあります。本データシートのブラウザ版を使用されている場合は、画面左側の説明をご覧ください。

PACKAGE OUTLINE

RPS0012A

VQFN-HR - 1 mm max height

PLASTIC QUAD FLATPACK-NO LEAD

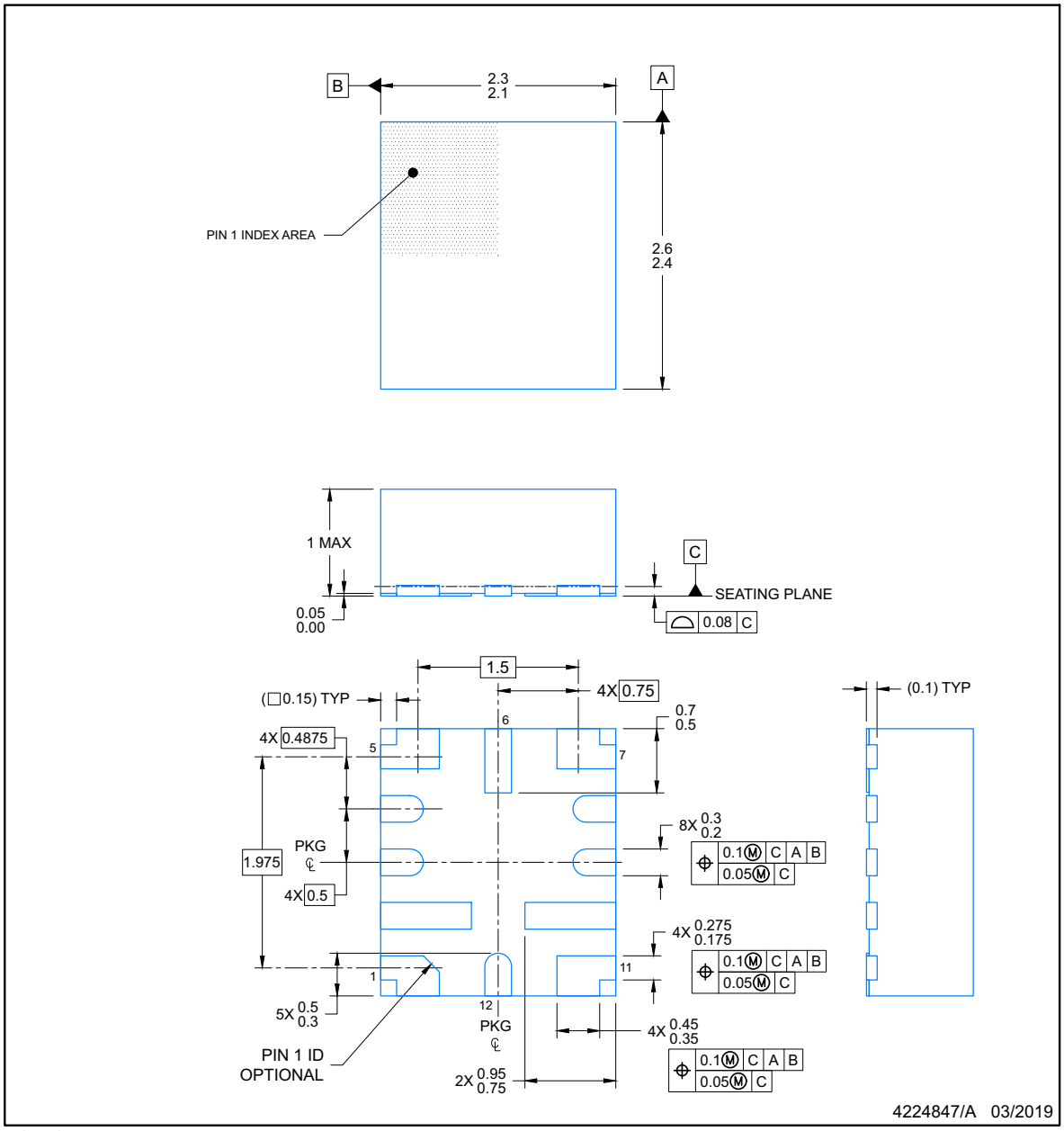

NOTES:

1. All linear dimensions are in millimeters. Any dimensions in parenthesis are for reference only. Dimensioning and tolerancing per ASME Y14.5M.
2. This drawing is subject to change without notice.

Copyright © 2019–2020, Texas Instruments Incorporated

EXAMPLE BOARD LAYOUT

RPS0012A

VQFN-HR - 1 mm max height

PLASTIC QUAD FLATPACK-NO LEAD

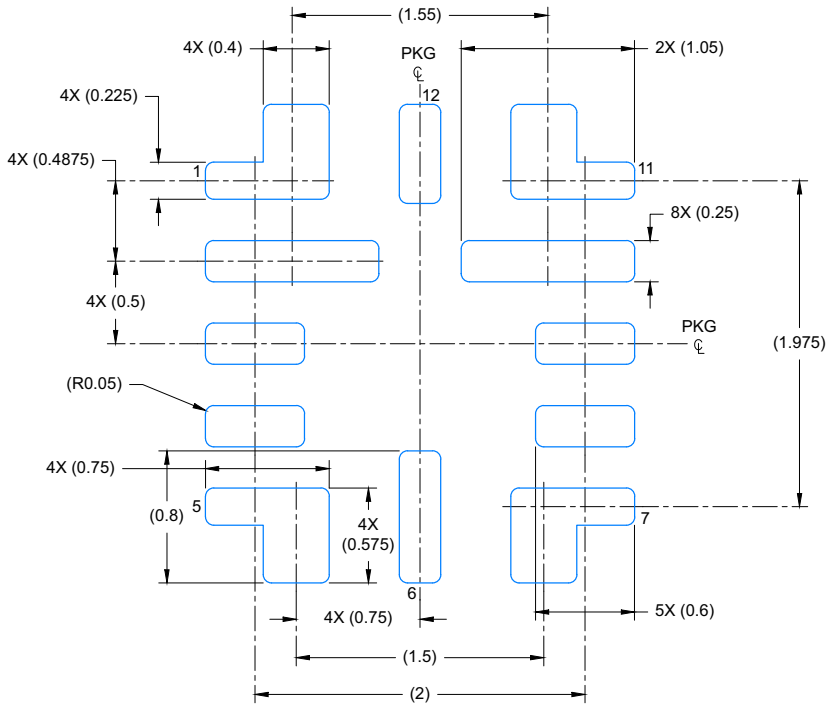

LAND PATTERN EXAMPLE
EXPOSED METAL SHOWN
SCALE: 25X

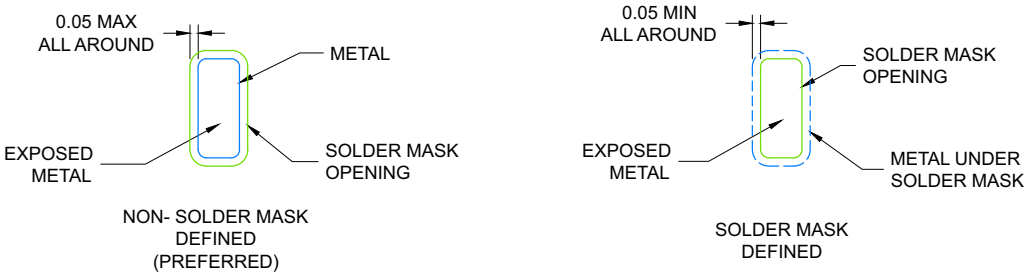

SOLDER MASK DETAILS

4224847/A 03/2019

NOTES: (continued)

3. For more information, see Texas Instruments literature number SLUA271 (www.ti.com/lit/slua271) .
4. Solder mask tolerances between and around signal pads can vary based on board fabrication site.

Copyright © 2019–2020, Texas Instruments Incorporated

EXAMPLE STENCIL DESIGN

RPS0012A

VQFN-HR - 1 mm max height

PLASTIC QUAD FLATPACK-NO LEAD

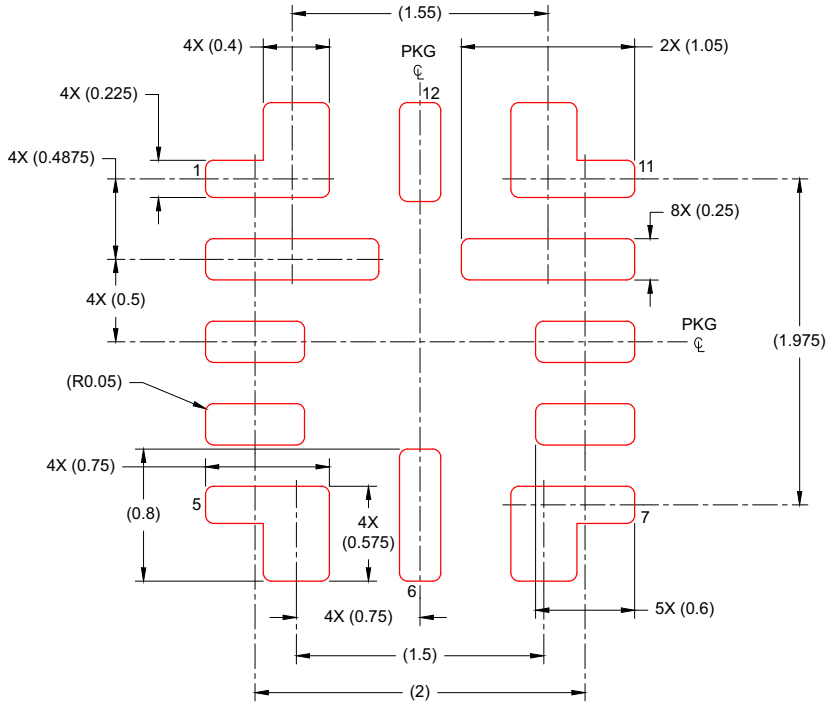

SOLDER PASTE EXAMPLE
BASED ON 0.1 mm THICK STENCIL
SCALE: 25X

4224847/A 03/2019

NOTES: (continued)

5. Laser cutting apertures with trapezoidal walls and rounded corners may offer better paste release. IPC-7525 may have alternate design recommendations.

Copyright © 2019–2020, Texas Instruments Incorporated

PACKAGING INFORMATION

Orderable part number	Status (1)	Material type (2)	Package | Pins	Package qty | Carrier	RoHS (3)	Lead finish/ Ball material (4)	MSL rating/ Peak reflow (5)	Op temp (°C)	Part marking (6)
TPS7A5401RPSR	Active	Production	VQFN-HR (RPS) | 12	3000 | LARGE T&R	Yes	MATTE SN	Level-2-260C-1 YEAR	-40 to 125	21AH
TPS7A5401RPSR.A	Active	Production	VQFN-HR (RPS) | 12	3000 | LARGE T&R	Yes	MATTE SN	Level-2-260C-1 YEAR	-40 to 125	21AH
TPS7A5401RPST	Active	Production	VQFN-HR (RPS) | 12	250 | SMALL T&R	Yes	MATTE SN	Level-2-260C-1 YEAR	-40 to 125	21AH
TPS7A5401RPST.A	Active	Production	VQFN-HR (RPS) | 12	250 | SMALL T&R	Yes	MATTE SN	Level-2-260C-1 YEAR	-40 to 125	21AH

(1) **Status:** For more details on status, see our product life cycle.

(2) **Material type:** When designated, preproduction parts are prototypes/experimental devices, and are not yet approved or released for full production. Testing and final process, including without limitation quality assurance, reliability performance testing, and/or process qualification, may not yet be complete, and this item is subject to further changes or possible discontinuation. If available for ordering, purchases will be subject to an additional waiver at checkout, and are intended for early internal evaluation purposes only. These items are sold without warranties of any kind.

(3) **RoHS values:** Yes, No, RoHS Exempt. See the TI RoHS Statement for additional information and value definition.

(4) **Lead finish/Ball material:** Parts may have multiple material finish options. Finish options are separated by a vertical ruled line. Lead finish/Ball material values may wrap to two lines if the finish value exceeds the maximum column width.

(5) **MSL rating/Peak reflow:** The moisture sensitivity level ratings and peak solder (reflow) temperatures. In the event that a part has multiple moisture sensitivity ratings, only the lowest level per JEDEC standards is shown. Refer to the shipping label for the actual reflow temperature that will be used to mount the part to the printed circuit board.

(6) **Part marking:** There may be an additional marking, which relates to the logo, the lot trace code information, or the environmental category of the part.

Multiple part markings will be inside parentheses. Only one part marking contained in parentheses and separated by a "~" will appear on a part. If a line is indented then it is a continuation of the previous line and the two combined represent the entire part marking for that device.

Important Information and Disclaimer: The information provided on this page represents TI's knowledge and belief as of the date that it is provided. TI bases its knowledge and belief on information provided by third parties, and makes no representation or warranty as to the accuracy of such information. Efforts are underway to better integrate information from third parties. TI has taken and continues to take reasonable steps to provide representative and accurate information but may not have conducted destructive testing or chemical analysis on incoming materials and chemicals. TI and TI suppliers consider certain information to be proprietary, and thus CAS numbers and other limited information may not be available for release.

In no event shall TI's liability arising out of such information exceed the total purchase price of the TI part(s) at issue in this document sold by TI to Customer on an annual basis.

OTHER QUALIFIED VERSIONS OF TPS7A54 :

- Automotive : TPS7A54-Q1

NOTE: Qualified Version Definitions:

- Automotive - Q100 devices qualified for high-reliability automotive applications targeting zero defects

TAPE AND REEL INFORMATION

REEL DIMENSIONS

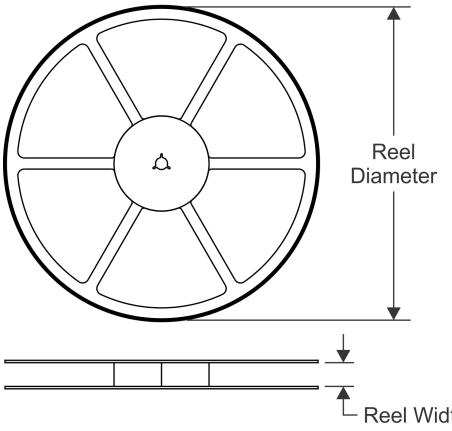

TAPE DIMENSIONS

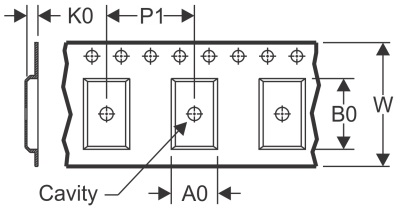

A0	Dimension designed to accommodate the component width
B0	Dimension designed to accommodate the component length
K0	Dimension designed to accommodate the component thickness
W	Overall width of the carrier tape
P1	Pitch between successive cavity centers

QUADRANT ASSIGNMENTS FOR PIN 1 ORIENTATION IN TAPE

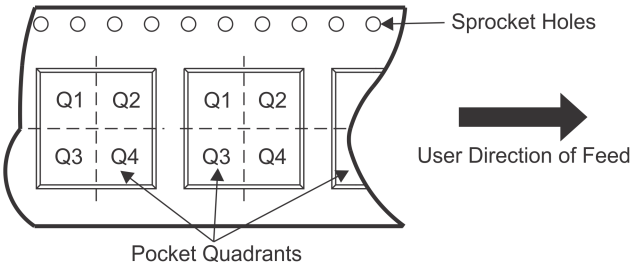

*All dimensions are nominal

Device	Package Type	Package Drawing	Pins	SPQ	Reel Diameter (mm)	Reel Width W1 (mm)	A0 (mm)	B0 (mm)	K0 (mm)	P1 (mm)	W (mm)	Pin1 Quadrant
TPS7A5401RPSR	VQFN-HR	RPS	12	3000	180.0	12.4	2.45	2.75	1.2	4.0	12.0	Q1
TPS7A5401RPST	VQFN-HR	RPS	12	250	180.0	12.4	2.45	2.75	1.2	4.0	12.0	Q1

TAPE AND REEL BOX DIMENSIONS

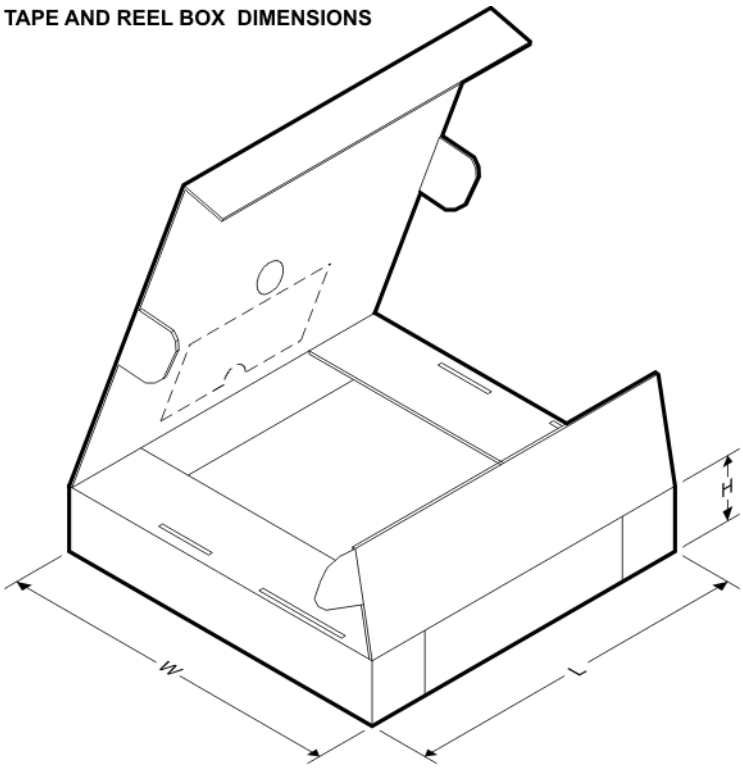

*All dimensions are nominal

Device	Package Type	Package Drawing	Pins	SPQ	Length (mm)	Width (mm)	Height (mm)
TPS7A5401RPSR	VQFN-HR	RPS	12	3000	210.0	185.0	35.0
TPS7A5401RPST	VQFN-HR	RPS	12	250	210.0	185.0	35.0

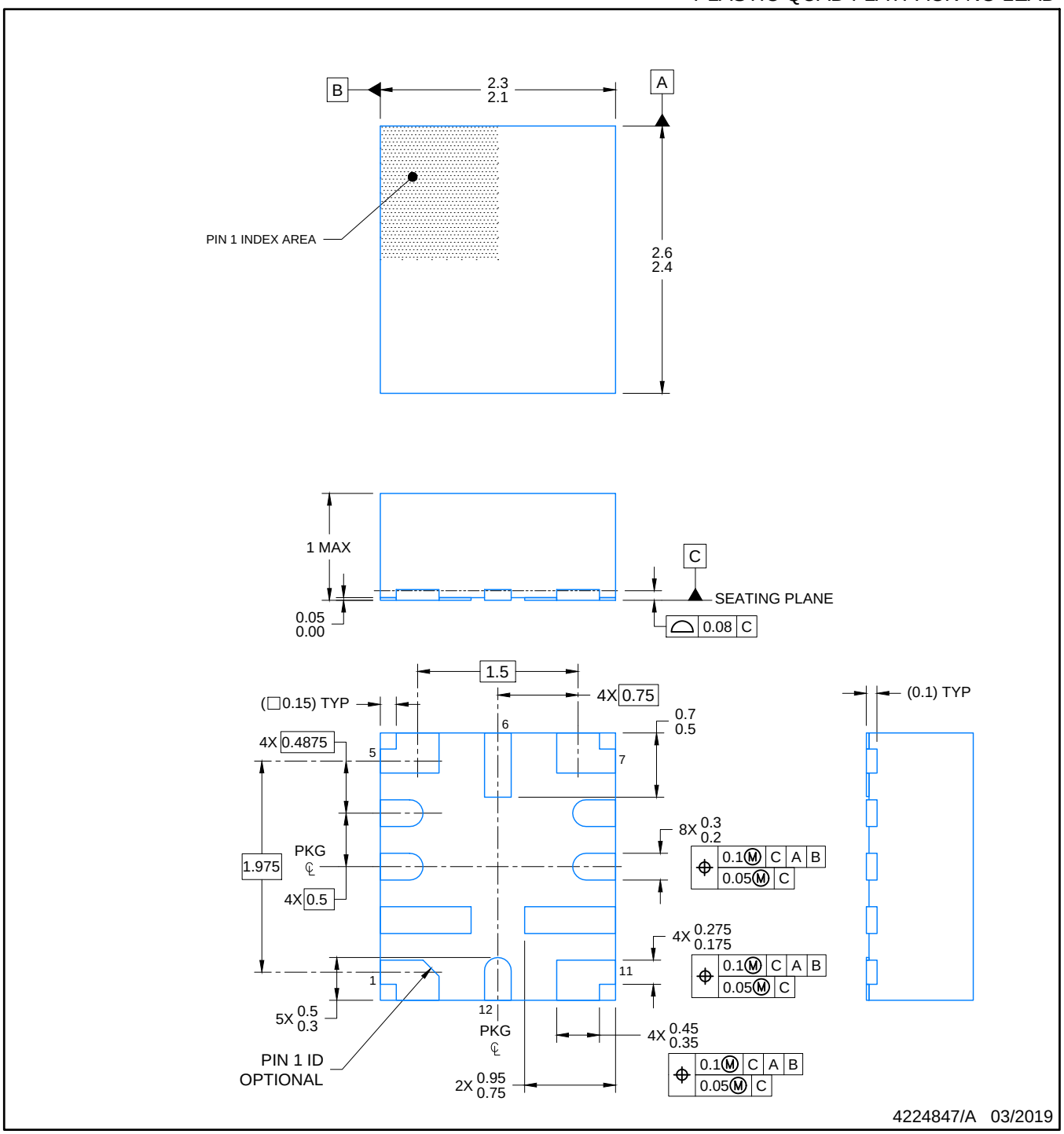

NOTES:

1. All linear dimensions are in millimeters. Any dimensions in parenthesis are for reference only. Dimensioning and tolerancing per ASME Y14.5M.
2. This drawing is subject to change without notice.

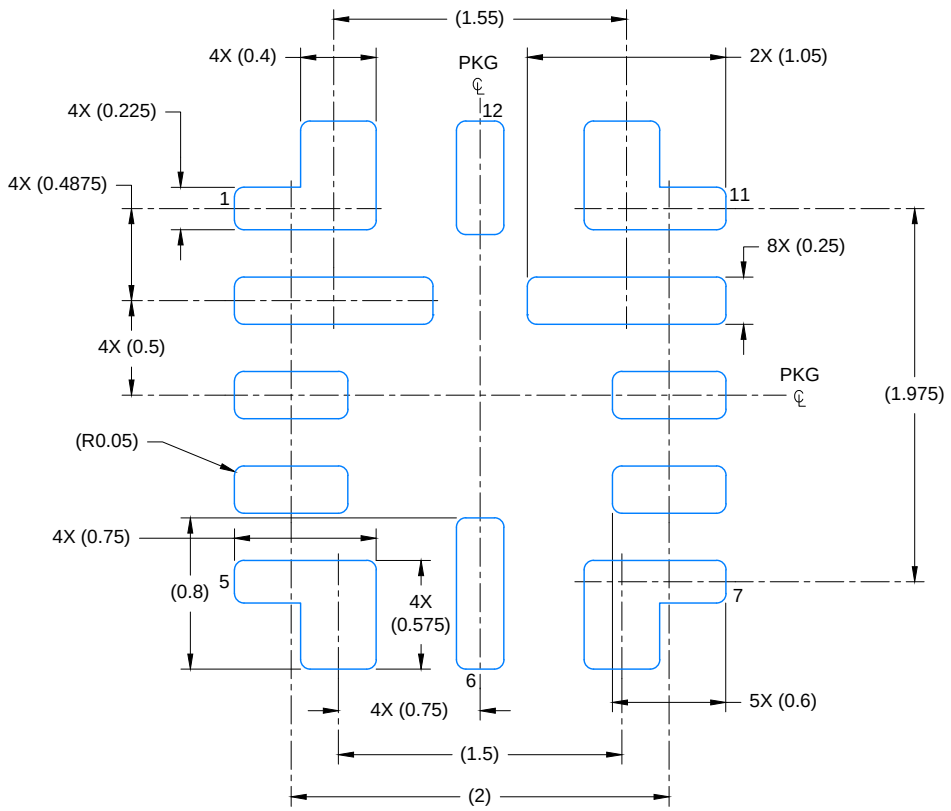

LAND PATTERN EXAMPLE
EXPOSED METAL SHOWN
SCALE: 25X

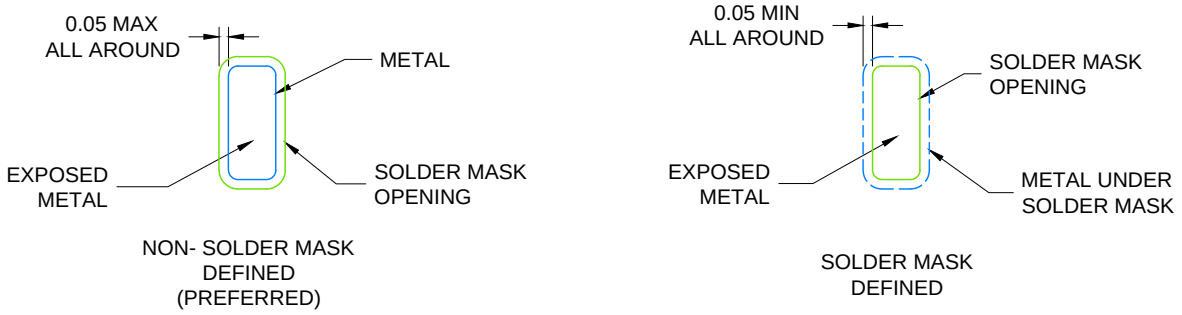

SOLDER MASK DETAILS

4224847/A 03/2019

NOTES: (continued)

3. For more information, see Texas Instruments literature number SLUA271 (www.ti.com/lit/slua271).
4. Solder mask tolerances between and around signal pads can vary based on board fabrication site.

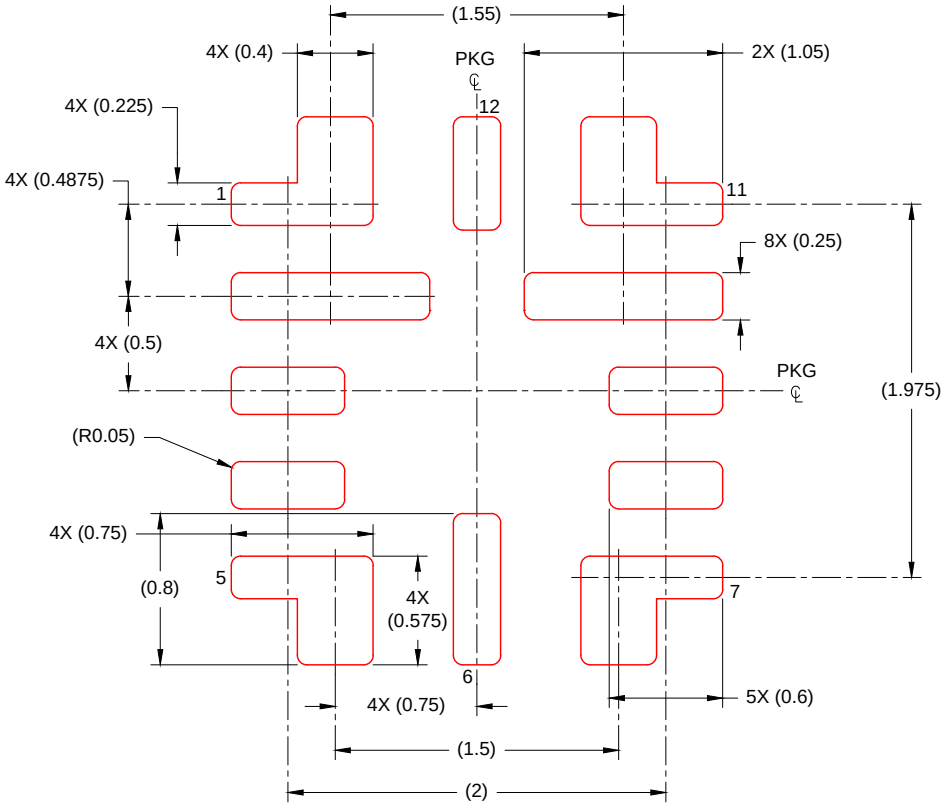

SOLDER PASTE EXAMPLE
BASED ON 0.1 mm THICK STENCIL
SCALE: 25X

4224847/A 03/2019

NOTES: (continued)

5. Laser cutting apertures with trapezoidal walls and rounded corners may offer better paste release. IPC-7525 may have alternate design recommendations.

重要なお知らせと免責事項

テキサス· インスツルメンツは、技術データと信頼性データ (データシートを含みます)、設計リソース (リファレンス デザインを含みます)、アプリケーションや設計に関する各種アドバイス、Web ツール、安全性情報、その他のリソースを、欠陥が存在する可能性のある「現状のまま」提供しており、商品性および特定目的に対する適合性の黙示保証、第三者の知的財産権の非侵害保証を含むいかなる保証も、明示的または黙示的にかかわらず拒否します。

これらのリソースは、 テキサス· インスツルメンツ製品を使用する設計の経験を積んだ開発者への提供を意図したものです。(1) お客様のアプリケーションに適した テキサス· インスツルメンツ製品の選定、(2) お客様のアプリケーションの設計、検証、試験、(3) お客様のアプリケーションに該当する各種規格や、その他のあらゆる安全性、セキュリティ、規制、または他の要件への確実な適合に関する責任を、お客様のみが単独で負うものとします。

上記の各種リソースは、予告なく変更される可能性があります。これらのリソースは、リソースで説明されている テキサス· インスツルメンツ製品を使用するアプリケーションの開発の目的でのみ、 テキサス· インスツルメンツはその使用をお客様に許諾します。これらのリソースに関して、他の目的で複製することや掲載することは禁止されています。 テキサス· インスツルメンツや第三者の知的財産権のライセンスが付与されている訳ではありません。お客様は、これらのリソースを自身で使用した結果発生するあらゆる申し立て、損害、費用、損失、責任について、 テキサス· インスツルメンツおよびその代理人を完全に補償するものとし、 テキサス· インスツルメンツは一切の責任を拒否します。

テキサス· インスツルメンツの製品は、 テキサス· インスツルメンツの販売条件、または ti.com やかかる テキサス· インスツルメンツ製品の関連資料などのいずれかを通じて提供する適用可能な条項の下で提供されています。 テキサス· インスツルメンツがこれらのリソースを提供することは、適用される テキサス· インスツルメンツの保証または他の保証の放棄の拡大や変更を意味するものではありません。

お客様がいかなる追加条項または代替条項を提案した場合でも、 テキサス· インスツルメンツはそれらに異議を唱え、拒否します。

郵送先住所：Texas Instruments, Post Office Box 655303, Dallas, Texas 75265
Copyright © 2025, Texas Instruments Incorporated