TPS799 200mA、低静止電流、超低ノイズ、高 PSRR 低ドロップアウト・リニア・レギュレータ

1 特長

- EN を備えた 200mA 低ドロップアウト・レギュレータ
- 複数の出力電圧バージョンを利用可能:
  - 固定出力:1.2V～4.5V
  - 可変出力:1.20V～6.5V
- EN トグルによる突入電流保護
- 低 I_Q:40µA
- 高 PSRR:
  - 1kHz 時に 66dB
  - 10kHz 時に 51dB
- 2µF (標準値) の低 ESR 出力容量で安定動作
- 非常に優れた負荷 / ライン過渡応答
- 総合精度 2% (負荷、ライン、温度)
- 非常に低いドロップアウト:100mV
- パッケージ:
  - 5 バンプ、薄型、0.97mm × 1.34mm DSBGA
  - 5 ピン SOT-23-THIN
  - 6 ピン WSON

2 アプリケーション

- 基地局
- スマートフォン
- EPOS
- ウェアラブル電子機器
- VCO、RF
- ワイヤレス LAN、Bluetooth®

3 説明

TPS799 低ドロップアウト (LDO) 低消費電力リニア・レギュレータは、極めて低いグランド電流で優れた AC 性能を提供します。高い電源除去比 (PSRR)、低ノイズ、高速スタートアップ、優れたライン / 負荷過渡応答を実現しながら、消費するグランド電流はわずか 40µA (標準値) です。

TPS799 は、セラミック・コンデンサで安定動作が可能であり、また、先進の BiCMOS 製造プロセスの採用により、200mA 出力で 100mV (標準値) のドロップアウト電圧を実現しています。高性能な電圧リファレンスと帰還ループにより、すべての負荷、ライン、製造プロセス、および温度変化に対して 2% の総合精度を達成できます。TPS799 は、EN トグルを使用したデバイス起動時の突入電流保護を特長としており、即座に電流をクランプします。

このデバイスは、T_J = –40℃～+125℃の温度範囲にわたって完全に仕様規定されており、薄型のダイ・サイズ・ボール・グリッド・アレイ (DSBGA) パッケージで供給されているため、ワイヤレス・ハンドセットと WLAN カードに適しています。このデバイスは 5 ピン SOT-23-THIN および 6 ピン WSON パッケージでも供給されています。

製品情報(1)

部品番号	パッケージ	本体サイズ (公称)
TPS799	SOT-23-THIN (5)	2.90mm × 1.60mm
	WSON (6)	2.00mm × 2.00mm
	DSBGA (5)	1.34mm × 0.97mm

(1) 利用可能なすべてのパッケージについては、データシートの末尾にあるパッケージ・オプションについての付録を参照してください。

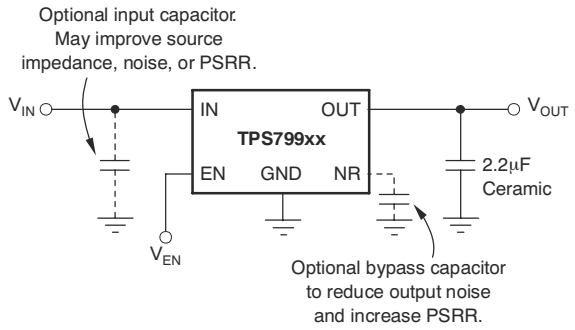

代表的なアプリケーション回路：固定電圧バージョン

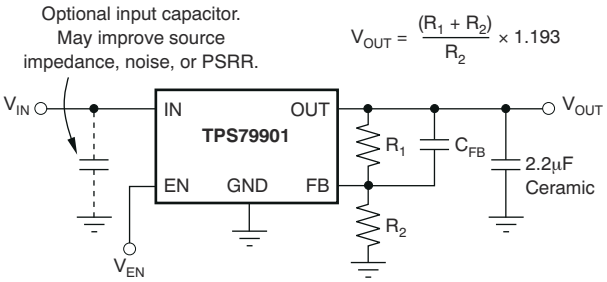

代表的なアプリケーション回路：可変電圧バージョン

英語版の TI 製品についての情報を翻訳したこの資料は、製品の概要を確認する目的で便宜的に提供しているものです。該当する正式な英語版の最新情報は、www.ti.com で閲覧でき、その内容が常に優先されます。TI では翻訳の正確性および妥当性につきましては一切保証いたしません。実際の設計などの前には、必ず最新版の英語版をご参照くださいますようお願いいたします。

Table of Contents

1 特長 ... 1
2 アプリケーション ... 1
3 説明 ... 1
4 Revision History ... 2
5 Pin Configuration and Functions ... 3
6 Specifications ... 4
6.1 Absolute Maximum Ratings ... 4
6.2 ESD Ratings ... 4
6.3 Recommended Operating Conditions ... 4
6.4 Thermal Information ... 4
6.5 Electrical Characteristics ... 5
6.6 Typical Characteristics ... 6
7 Detailed Description ... 11
7.1 Overview ... 11
7.2 Functional Block Diagrams ... 11
7.3 Feature Description ... 12
7.4 Device Functional Modes ... 12
8 Application and Implementation ... 13
8.1 Application Information ... 13
8.2 Typical Application ... 13
8.3 What To Do and What Not To Do ... 15
9 Power Supply Recommendations ... 15
10 Layout ... 15
10.1 Layout Guidelines ... 15
10.2 Layout Example ... 16
11 Device and Documentation Support ... 17
11.1 Device Support ... 17
11.2 Documentation Support ... 17
11.3 Receiving Notification of Documentation Updates ... 17
11.4 サポート・リソース ... 17
11.5 Trademarks ... 18
11.6 Electrostatic Discharge Caution ... 18
11.7 Glossary ... 18
12 Mechanical, Packaging, and Orderable Information ... 18

4 Revision History

資料番号末尾の英字は改訂を表しています。その改訂履歴は英語版に準じています。

Changes from Revision K (January 2015) to Revision L (September 2021) — **Page**

- *「特長」*の箇条書きに 10kHz での PSRR の値を追加 ... 1
- 「*特長*」の箇条書きに、不足していたパッケージを追加 ... 1
- 文書全体にわたって、SOT を SOT-23-THIN に、SON を WSON に変更 ... 1
- 「*アプリケーション*」の箇条書きを変更 ... 1
- *「製品情報」*表の DSBGA パッケージの本体サイズを変更 ... 1
- Changed YZY package to YZU in *Pin Functions* table (typo) ... 3
- Added note (1) to *Recommended Operating Conditions*; moved from *Electrical Characteristics* ... 4
- Deleted *Input Voltage* from *Electrical Characteristics*; already shown in *Recommended Operating Conditions* ... 5
- Deleted *Junction Temperature* from *Electrical Characteristics*; already shown in *Recommended Operating Conditions* ... 5
- Changed *Do's and Don'ts* title to *What To Do and What Not To Do* ... 15

Changes from Revision J (August 2010) to Revision K (January 2015) — **Page**

- 「*ESD 定格*」表、「*機能説明*」セクション、「*デバイスの機能モード*」セクション、「*アプリケーションと実装*」セクション、「*電源に関する推奨事項*」セクション、「*レイアウト*」セクション、「*デバイスおよびドキュメントのサポート*」セクション、「*メカニカル、パッケージ、および注文情報*」セクションを追加。 ... 1
- 「特長」一覧を変更 ... 1
- 「*概要*」セクションを変更 ... 1
- 先頭ページの図を変更、デバイスのピン配置をアプリケーション回路に置き換え ... 1
- Changed Pin Configuration and Functions section; updated table format, renamed pin packages ... 3
- Changed "free-air" to "junction" temperature in condition statement for *Absolute Maximum Ratings* ... 4
- Changed *free-air* to *junction* in Recommended Operating Conditions table conditions ... 4
- Added thermal information for additional device packages ... 4

Copyright © 2022 Texas Instruments Incorporated

5 Pin Configuration and Functions

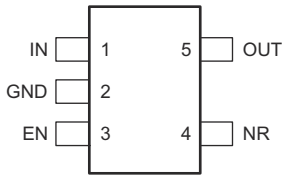

図 5-1. DDC Package (Fixed), 5-Pin SOT-23-THIN (Top View)

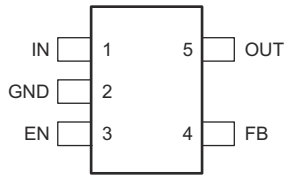

図 5-2. DDC Package (Adjustable), 5-Pin SOT-23-THIN (Top View)

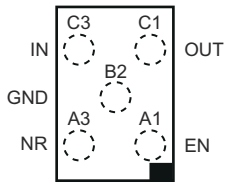

図 5-3. YZU Package (Fixed), 5-Pin DSBGA (Top View)

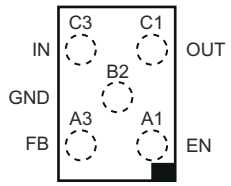

図 5-4. YZU Package (Adjustable), 5-Pin DSBGA (Top View)

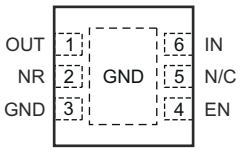

図 5-5. DRV Package (Fixed), 6-Pin WSON With Exposed Thermal Pad (Top View)

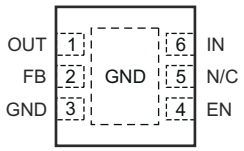

図 5-6. DRV Package (Adjustable), 6-Pin WSON With Exposed Thermal Pad (Top View)

表 5-1. Pin Functions

PIN				I/O	DESCRIPTION
NAME	DDC	YZU	DRV		
IN	1	C3	6	I	Input supply.
GND	2	B2	3, Pad	—	Ground. The pad must be tied to GND.
EN	3	A1	4	I	Driving this pin high turns on the regulator. Driving this pin low puts the regulator into shutdown mode. EN can be connected to IN if not used.
NR	4	A3	2	—	Fixed voltage versions only. Noise reduction; connecting this pin to an external capacitor bypasses noise generated by the internal band gap. This capacitor allows output noise to be reduced to very low levels.
FB	4	A3	2	I	Adjustable voltage version only. Feedback; this pin is the input to the control loop error amplifier, and sets the output voltage of the device.
OUT	5	C1	1	O	Output of the regulator. To assure stability, a small ceramic capacitor (total typical capacitance ≥ 2 µF) is required from this pin to ground.
N/C	—	—	5	—	Not internally connected. This pin must either be left open, or tied to GND.

Copyright © 2022 Texas Instruments Incorporated

6 Specifications

6.1 Absolute Maximum Ratings

over operating junction temperature range (unless otherwise noted) [1]

		MIN	MAX	UNIT
Voltage[2]	IN	–0.3	7.0	V
	EN	–0.3	V_{IN} + 0.3	V
	OUT	–0.3	V_{IN} + 0.3	V
Current	OUT	Internally limited		mA
Temperature	Operating virtual junction, T_J	–55	150	°C
	Storage, T_{stg}	–55	150	°C

(1) Stresses beyond those listed under *Absolute Maximum Ratings* may cause permanent damage to the device. These are stress ratings only, which do not imply functional operation of the device at these or any other conditions beyond those indicated under *Recommended Operating Conditions*. Exposure to absolute-maximum-rated conditions for extended periods may affect device reliability.
(2) All voltages are with respect to network ground terminal.

6.2 ESD Ratings

			VALUE	UNIT
$V_{(ESD)}$	Electrostatic discharge	Human body model (HBM), per ANSI/ESDA/JEDEC JS-001, all pins[1]	±2000	V
		Charged device model (CDM), per JEDEC specification JESD22-C101, all pins[2]	±500	

(1) JEDEC document JEP155 states that 500-V HBM allows safe manufacturing with a standard ESD control process.
(2) JEDEC document JEP157 states that 250-V CDM allows safe manufacturing with a standard ESD control process.

6.3 Recommended Operating Conditions

over operating junction temperature range (unless otherwise noted)

		MIN	NOM	MAX	UNIT
V_{IN}	Input voltage[1]	2.7		6.5	V
I_{OUT}	Output current	0.5		200	mA
T_J	Operating junction temperature	–40		125	°C

(1) Minimum $V_{IN} = V_{OUT} + V_{DO}$ or 2.7 V, whichever is greater.

6.4 Thermal Information

THERMAL METRIC[1]		TPS799			UNIT
		DDC (SOT-23-THIN)	DRV (WSON)	YZU (DSBGA)	
		5 PINS	6 PINS	5 PINS	
$R_{\theta JA}$	Junction-to-ambient thermal resistance	225.3	74.2	143.3	°C/W
$R_{\theta JC(top)}$	Junction-to-case (top) thermal resistance	39.3	58.8	1.1	°C/W
$R_{\theta JB}$	Junction-to-board thermal resistance	47.3	145.9	84.7	°C/W
ψ_{JT}	Junction-to-top characterization parameter	0.5	0.2	3.8	°C/W
ψ_{JB}	Junction-to-board characterization parameter	46.7	54.4	84.4	°C/W
$R_{\theta JC(bot)}$	Junction-to-case (bottom) thermal resistance	N/A	7.2	N/A	°C/W

(1) For more information about traditional and new thermal metrics, see the *Semiconductor and IC Package Thermal Metrics* application report.

Copyright © 2022 Texas Instruments Incorporated

6.5 Electrical Characteristics

at T_J = –40°C to +125°C, V_{IN} = $V_{OUT(nom)}$ + 0.3 V or 2.7 V (whichever is greater), I_{OUT} = 1 mA, V_{EN} = V_{IN}, C_{OUT} = 2.2 µF, and C_{NR} = 0.01 µF (unless otherwise noted); for TPS79901, V_{OUT} = 3.0 V; typical values are at T_J = 25°C

PARAMETER		TEST CONDITIONS		MIN	TYP	MAX	UNIT
V_{FB}	Internal reference (TPS79901)			1.169	1.193	1.217	V
V_{OUT}	Output voltage range (TPS79901)			V_{FB}		6.5 – V_{DO}	V
	Output accuracy, nominal	T_J = 25°C		–1%		1%	
	Output accuracy[(1)] over V_{IN}, I_{OUT}, temperature	V_{OUT} + 0.3 V ≤ V_{IN} ≤ 6.5 V 500 µA ≤ I_{OUT} ≤ 200 mA		–2%	±1%	2%	
$\Delta V_{O(\Delta VI)}$	Line regulation[(1)]	$V_{OUT(NOM)}$ + 0.3 V ≤ V_{IN} ≤ 6.5 V			0.02		%/V
$\Delta V_{O(\Delta IO)}$	Load regulation	500 µA ≤ I_{OUT} ≤ 200 mA			0.002		%/mA
V_{DO}	Dropout voltage[(1)] (V_{IN} = $V_{OUT(nom)}$ – 0.1 V)	I_{OUT} = 200 mA	$V_{OUT(nom)}$ ≤ 3.3 V		100	175	mV
			$V_{OUT(nom)}$ ≥ 3.3 V		90	160	
I_{CL}	Output current limit	V_{OUT} = 0.9 × $V_{OUT(nom)}$		220	400	600	mA
I_{GND}	Ground pin current	500 µA ≤ I_{OUT} ≤ 200 mA			40	60	µA
I_{SHDN}	Shutdown current (I_{GND})	V_{EN} ≤ 0.4 V, 2.7 V ≤ V_{IN} ≤ 6.5 V			0.15	1	µA
I_{FB}	Feedback pin current (TPS79901)			–0.5		0.5	µA
PSRR	Power-supply rejection ratio	V_{IN} = 3.85 V, V_{OUT} = 2.85 V, C_{NR} = 0.01 µF, I_{OUT} = 100 mA	f = 100 Hz		70		dB
			f = 1 kHz		66		
			f = 10 kHz		51		
			f = 100 kHz		38		
V_n	Output noise voltage	BW = 10 Hz to 100 kHz, V_{OUT} = 2.85 V	C_{NR} = 0.01 µF		10.5 × V_{OUT}		μV_{RMS}
			C_{NR} = none		94 × V_{OUT}		
	Start-up time	V_{OUT} = 2.85 V, R_L = 14 Ω, C_{OUT} = 2.2 µF	C_{NR} = 0.001 µF		45		µs
			C_{NR} = 0.047 µF		45		
			C_{NR} = 0.01 µF		50		
			C_{NR} = none		50		
$V_{EN(HI)}$	Enable high (enabled)			1.2		V_{IN}	V
$V_{EN(LO)}$	Enable low (shutdown)			0		0.4	V
$I_{EN(HI)}$	Enable pin current, enabled	V_{EN} = V_{IN} = 6.5 V			0.03	1	µA
UVLO	Undervoltage lockout	V_{IN} rising		1.90	2.20	2.65	V
	UVLO hysteresis	V_{IN} falling			70		mV
T_{sd}	Thermal shutdown temperature	Shutdown, temperature increasing			165		°C
		Reset, temperature decreasing			145		

(1) V_{DO} is not measured for devices with $V_{OUT(nom)}$ < 2.8 V because minimum V_{IN} = 2.7 V.

6.6 Typical Characteristics

at T_J= –40°C to +125°C, V_{IN} = $V_{OUT(nom)}$ + 0.3 V or 2.7 V (whichever is greater), I_{OUT} = 1 mA, V_{EN} = V_{IN}, C_{OUT} = 2.2 µF, and C_{NR} = 0.01 µF (unless otherwise noted); for TPS79901, V_{OUT} = 3.0 V; typical values are at T_J = 25°C

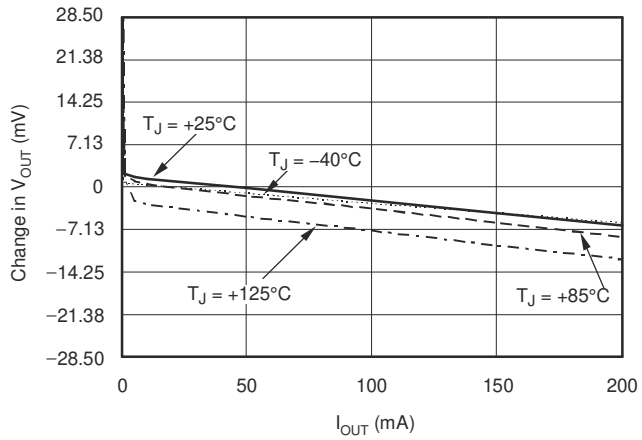

図 6-1. Load Regulation

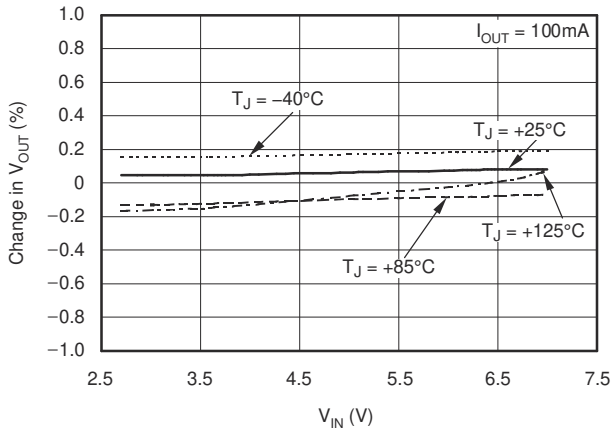

図 6-2. Line Regulation

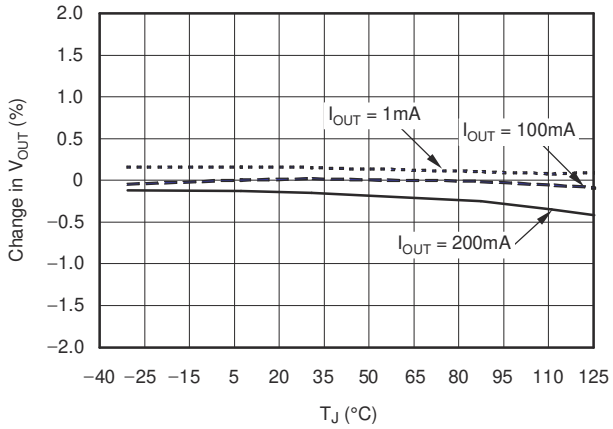

図 6-3. Output Voltage vs Junction Temperature

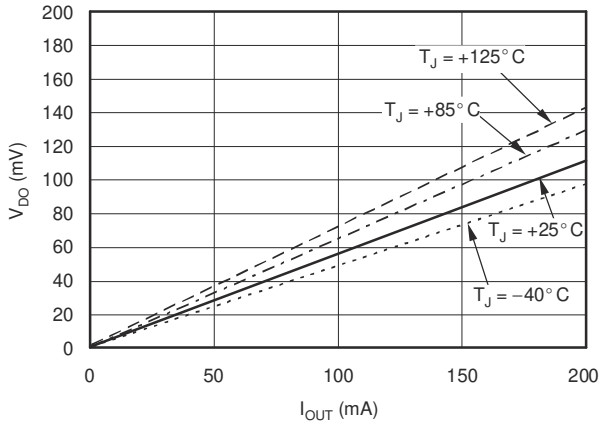

図 6-4. TPS799285 Dropout Voltage vs Output Current

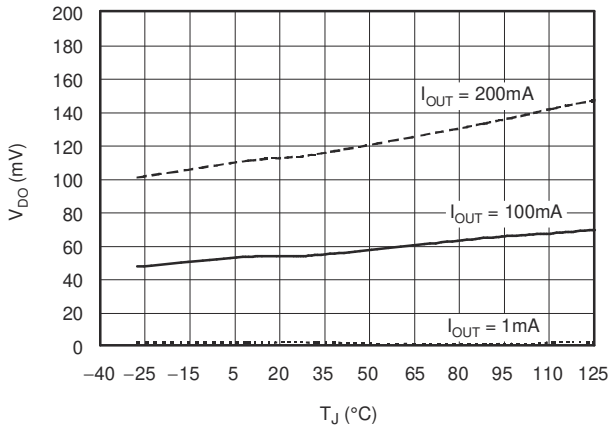

図 6-5. TPS799285 Dropout Voltage vs Junction Temperature

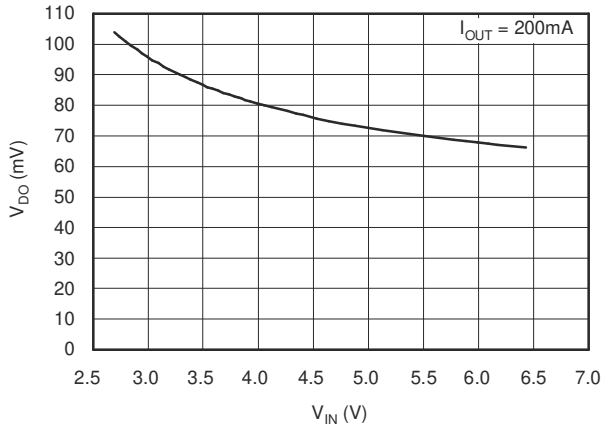

図 6-6. TPS79901 Dropout vs Input Voltage

Copyright © 2022 Texas Instruments Incorporated

6.6 Typical Characteristics (continued)

at T_J= –40°C to +125°C, V_{IN} = $V_{OUT(nom)}$ + 0.3 V or 2.7 V (whichever is greater), I_{OUT} = 1 mA, V_{EN} = V_{IN}, C_{OUT} = 2.2 µF, and C_{NR} = 0.01 µF (unless otherwise noted); for TPS79901, V_{OUT} = 3.0 V; typical values are at T_J = 25°C

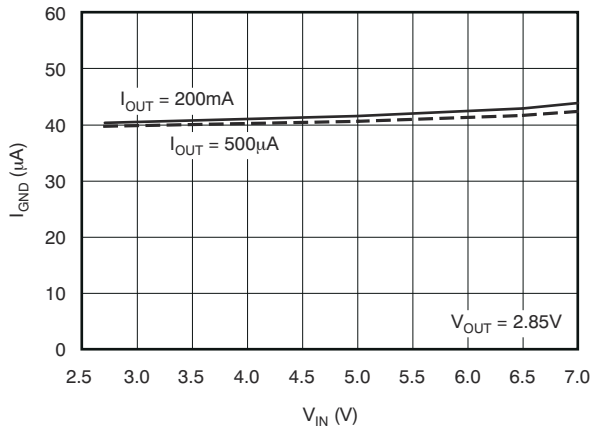

図 6-7. Ground Pin Current vs Input Voltage

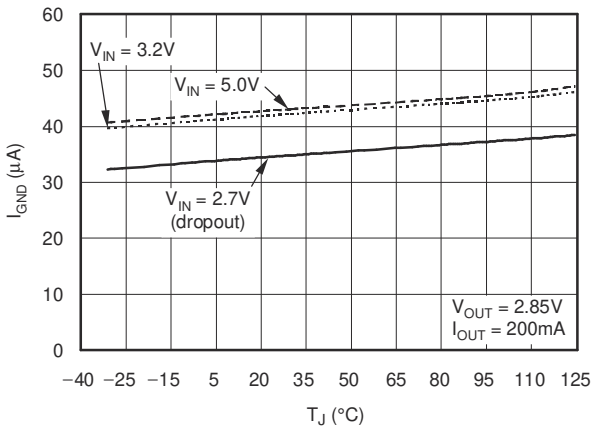

図 6-8. TPS799285 Ground Pin Current vs Junction Temperature

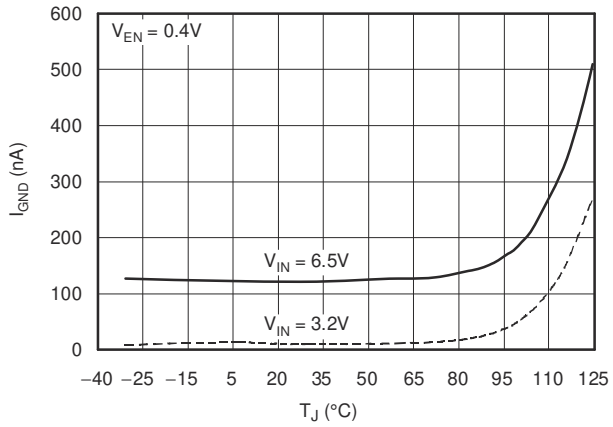

図 6-9. Ground Pin Current (Disabled) vs Junction Temperature

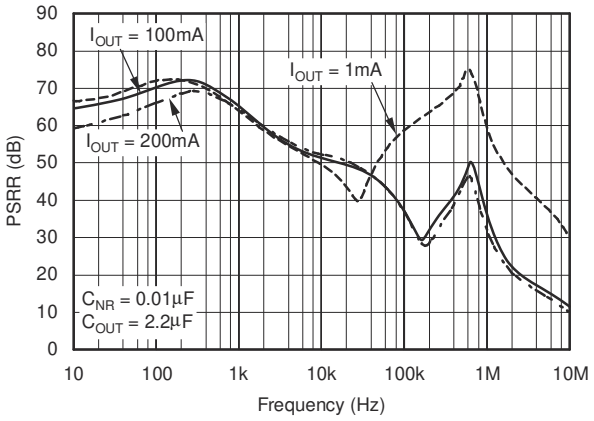

V_{IN} – V_{OUT} = 1.0 V

図 6-10. TPS799285 Power-Supply Ripple Rejection vs Frequency

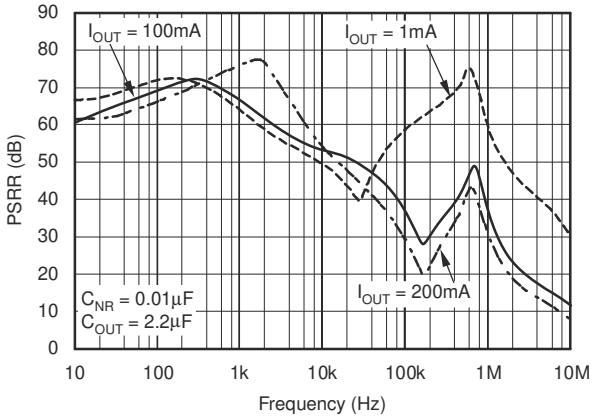

V_{IN} – V_{OUT} = 0.5 V

図 6-11. TPS799285 Power-Supply Ripple Rejection vs Frequency

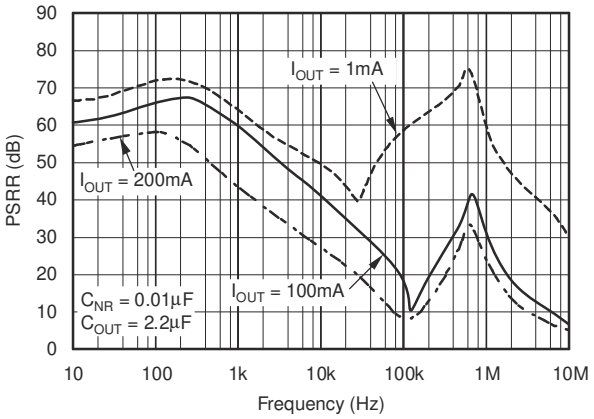

V_{IN} – V_{OUT} = 0.25 V

図 6-12. TPS799285 Power-Supply Ripple Rejection vs Frequency

Copyright © 2022 Texas Instruments Incorporated

6.6 Typical Characteristics (continued)

at T_J= –40°C to +125°C, V_{IN} = $V_{OUT(nom)}$ + 0.3 V or 2.7 V (whichever is greater), I_{OUT} = 1 mA, V_{EN} = V_{IN}, C_{OUT} = 2.2 µF, and C_{NR} = 0.01 µF (unless otherwise noted); for TPS79901, V_{OUT} = 3.0 V; typical values are at T_J = 25°C

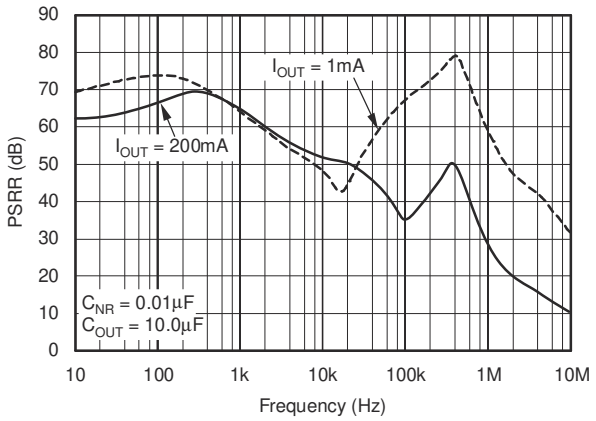

V_{IN} – V_{OUT} = 1.0 V

図 6-13. TPS799285 Power-Supply Ripple Rejection vs Frequency

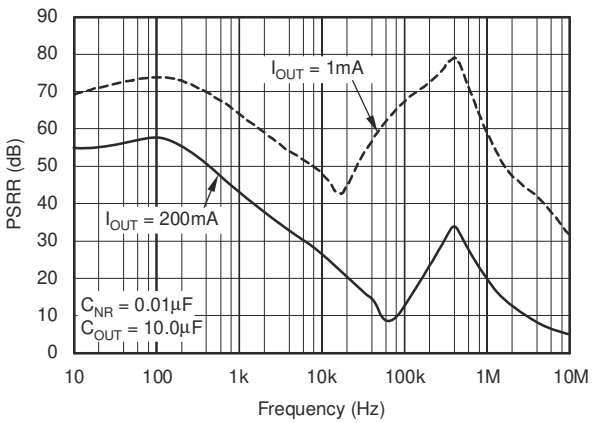

V_{IN} – V_{OUT} = 0.25 V

図 6-14. TPS799285 Power-Supply Ripple Rejection vs Frequency

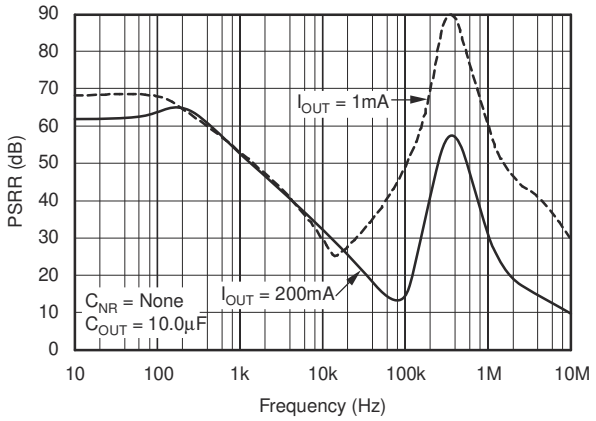

V_{IN} – V_{OUT} = 1.0 V

図 6-15. TPS799285 Power-Supply Ripple Rejection vs Frequency

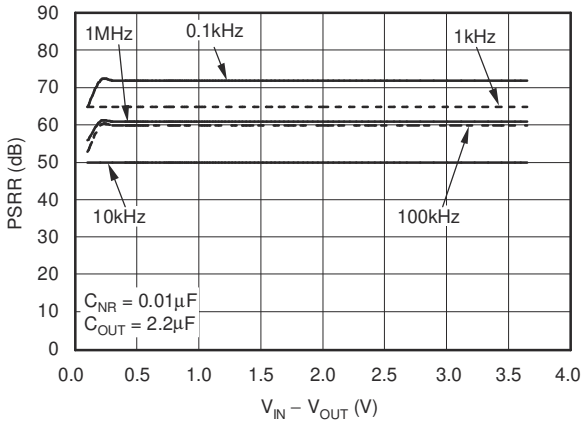

I_{OUT} = 1 mA

図 6-16. Power-Supply Ripple Rejection vs V_{IN} – V_{OUT}

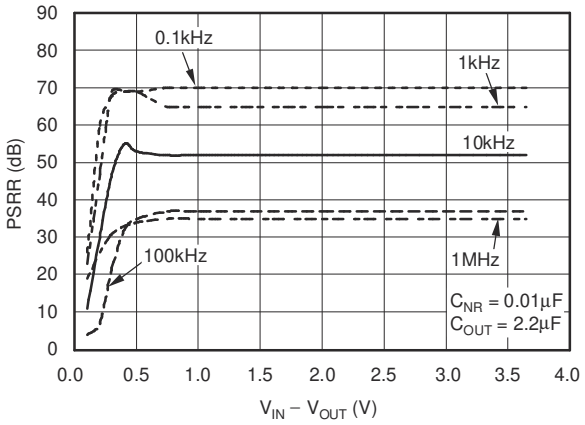

I_{OUT} = 100 mA

図 6-17. Power-Supply Ripple Rejection vs V_{IN} – V_{OUT}

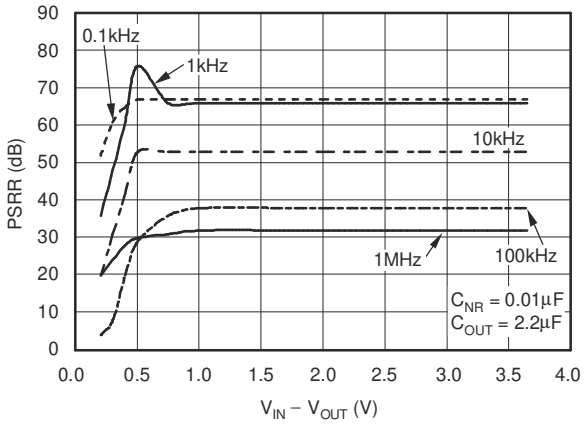

I_{OUT} = 200 mA

図 6-18. Power-Supply Ripple Rejection vs V_{IN} – V_{OUT}

Copyright © 2022 Texas Instruments Incorporated

6.6 Typical Characteristics (continued)

at T_J= –40°C to +125°C, V_{IN} = $V_{OUT(nom)}$ + 0.3 V or 2.7 V (whichever is greater), I_{OUT} = 1 mA, V_{EN} = V_{IN}, C_{OUT} = 2.2 µF, and C_{NR} = 0.01 µF (unless otherwise noted); for TPS79901, V_{OUT} = 3.0 V; typical values are at T_J = 25°C

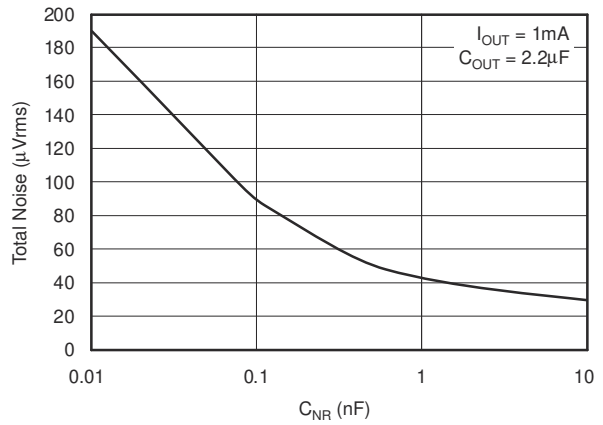

図 6-19. TPS799285 Total Noise vs C_{NR}

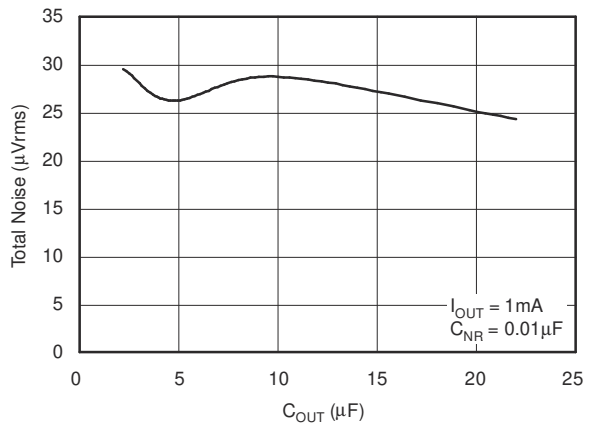

図 6-20. TPS799285 Total Noise vs C_{OUT}

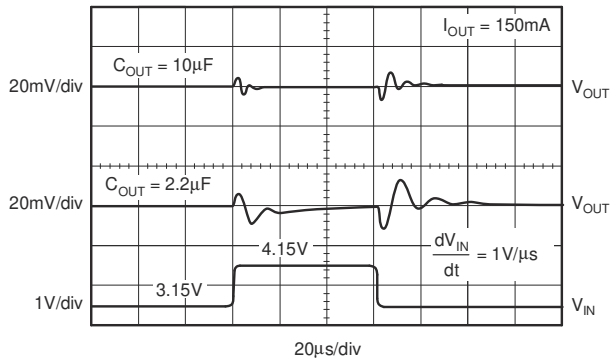

図 6-21. TPS799285 Line Transient Response

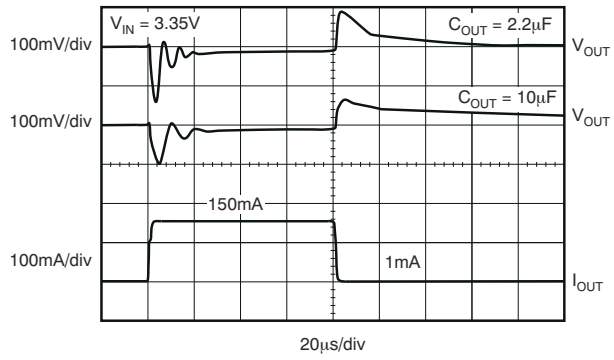

図 6-22. TPS799285 Load Transient Response

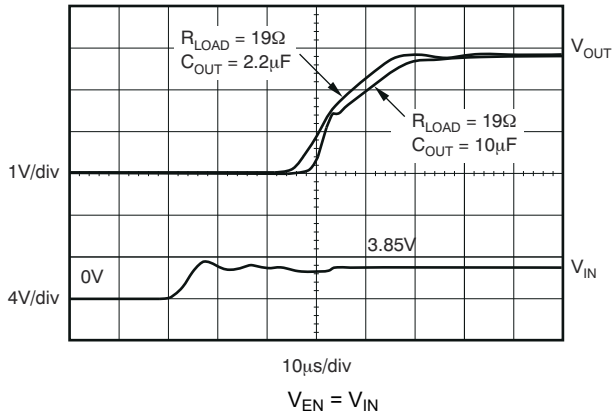

図 6-23. TPS799285 Turn-On Response

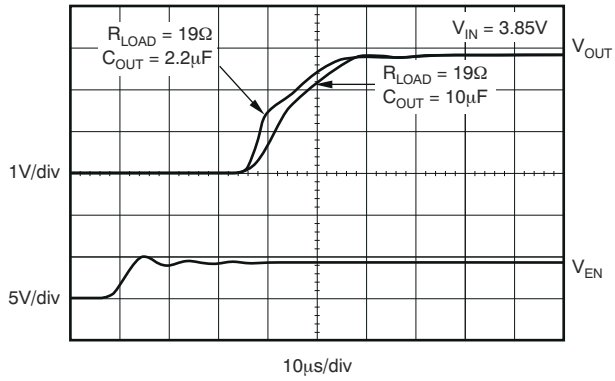

図 6-24. TPS799285 Enable Response

6.6 Typical Characteristics (continued)

at T_J= –40°C to +125°C, V_{IN} = $V_{OUT(nom)}$ + 0.3 V or 2.7 V (whichever is greater), I_{OUT} = 1 mA, V_{EN} = V_{IN}, C_{OUT} = 2.2 µF, and C_{NR} = 0.01 µF (unless otherwise noted); for TPS79901, V_{OUT} = 3.0 V; typical values are at T_J = 25°C

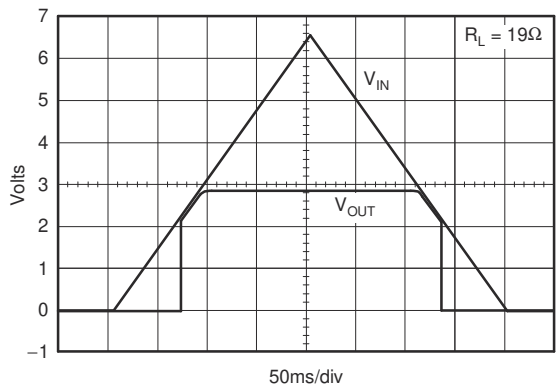

図 6-25. TPS799285 Power-Up and Power-Down

Copyright © 2022 Texas Instruments Incorporated

7 Detailed Description

7.1 Overview

The TPS799 low-dropout (LDO) regulator combines the high performance required of many RF and precision analog applications with ultra-low current consumption. High PSRR is provided by a high-gain, high-bandwidth error loop with good supply rejection at very low headroom (V_{IN} – V_{OUT}). A noise-reduction pin is provided to bypass noise generated by the band-gap reference and to improve PSRR, while a quick-start circuit quickly charges this capacitor at start-up. The combination of high performance and low ground current also make this device an excellent choice for portable applications. This device has thermal and overcurrent protection, and is fully specified from –40°C to +125°C.

The TPS799 also features inrush current protection with an EN toggle start-up, and overshoot detection at the output. When the EN toggle is used to start the device, current limit protection is immediately activated, restricting the inrush current to the device. If voltage at the output overshoots 5% from the nominal value, a pulldown resistor reduces the voltage to normal operating conditions, as shown in the *Functional Block Diagrams*.

7.2 Functional Block Diagrams

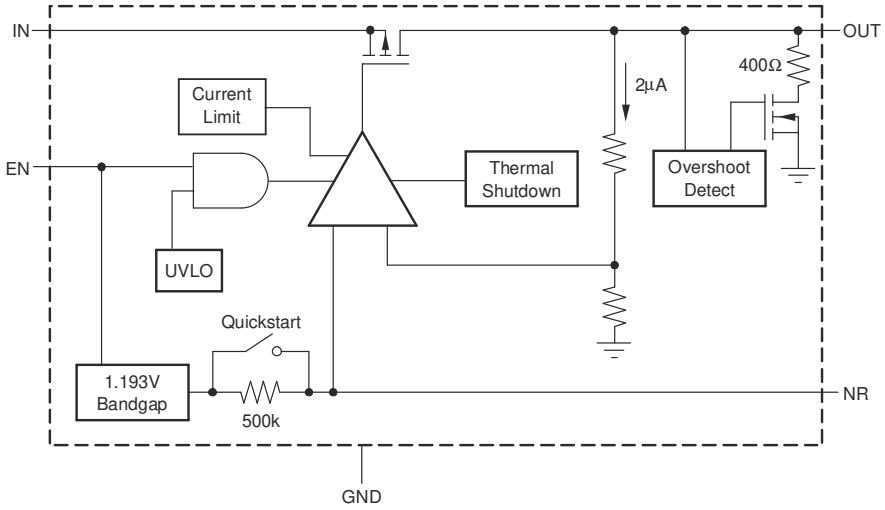

図 7-1. Fixed-Voltage Versions

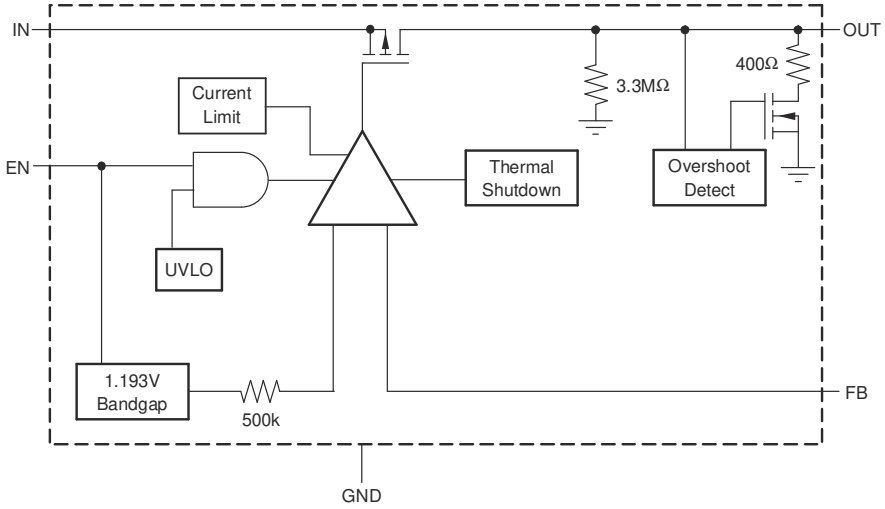

図 7-2. Adjustable-Voltage Versions

7.3 Feature Description

7.3.1 Internal Current Limit

The TPS799 internal current limit helps protect the regulator during fault conditions. In current limit mode, the output sources a fixed amount of current that is largely independent of the output voltage. For reliable operation, do not operate the device in a current-limit state for extended periods of time.

The PMOS pass element in the TPS799 has a built-in body diode that conducts current when the voltage at OUT exceeds the voltage at IN. This current is not limited; therefore, if extended reverse voltage operation is anticipated, external limiting may be required.

7.3.2 Shutdown

The enable pin (EN) is active high and is compatible with standard and low-voltage TTL-CMOS levels. When shutdown capability is not required, EN can be connected to IN.

7.3.3 Start Up

The TPS799 uses a start-up circuit to quickly charge the noise reduction capacitor, C_{NR}, if present (see the *Functional Block Diagrams*). This circuit allows for the combination of very low output noise and fast start-up times. The NR pin is high impedance so a low leakage C_{NR} capacitor must be used; most ceramic capacitors are appropriate for this configuration.

For fastest start-up, apply V_{IN} first, and then drive the enable pin (EN) high. If EN is tied to IN, start up is somewhat slower. The start-up switch is closed for approximately 135 µs. To ensure that C_{NR} is fully charged during start-up, use a 0.01-µF or smaller capacitor.

7.3.4 Undervoltage Lockout (UVLO)

The TPS799 uses an undervoltage lockout circuit to keep the output shut off until internal circuitry is operating properly. The UVLO circuit has a deglitch feature so that undershoot transients are typically ignored on the input if these transients are less than 50 µs in duration.

7.4 Device Functional Modes

Driving EN over 1.2 V turns on the regulator. Driving EN below 0.4 V puts the regulator into shutdown mode, thus reducing the operating current to 150 nA, nominal.

Copyright © 2022 Texas Instruments Incorporated

8 Application and Implementation

Note

以下のアプリケーション情報は、TI の製品仕様に含まれるものではなく、TI ではその正確性または完全性を保証いたしません。個々の目的に対する製品の適合性については、お客様の責任で判断していただくことになります。お客様は自身の設計実装を検証しテストすることで、システムの機能を確認する必要があります。

8.1 Application Information

The TPS799 LDO regulator provides high PSRR while maintaining ultra-low current consumption. The device also features inrush current protection and overshoot detection at the output.

8.2 Typical Application

図 8-1 and 図 8-2 show the basic circuit connections.

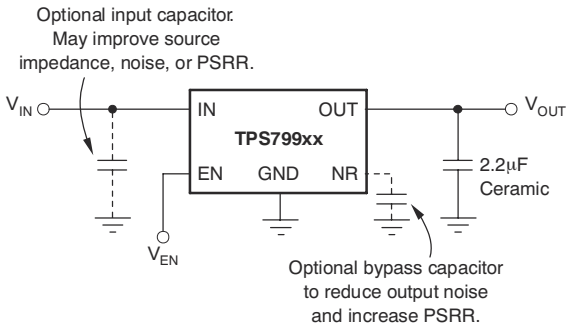

図 8-1. Typical Application Circuit for Fixed Voltage Versions

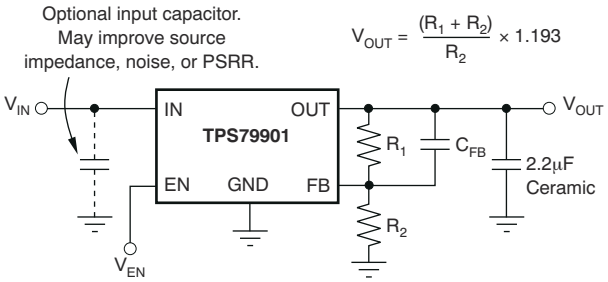

図 8-2. Typical Application Circuit for Adjustable Voltage Version

8.2.1 Design Requirements

Select the desired device based on the output voltage.

Provide an input supply with adequate headroom to account for dropout and output current to account for the GND terminal current, and power the load.

8.2.2 Detailed Design Procedure

8.2.2.1 Input and Output Capacitor Requirements

Although an input capacitor is not required for stability, good analog design practice is to connect a 0.1-µF to 1-µF low ESR capacitor across the input supply near the regulator. This capacitor counteracts reactive input sources and improves transient response, noise rejection, and ripple rejection. A higher-value capacitor may be necessary if large, fast rise-time load transients are anticipated, or if the device is located several inches from the power source. If source impedance is not sufficiently low, a 0.1-µF input capacitor may be necessary to ensure stability.

The TPS799 is designed to be stable with standard ceramic capacitors with values of 2.2 µF or greater. X5R- and X7R-type capacitors are best because they have minimal variation in value and ESR over temperature. Maximum ESR must be less than 1.0 Ω.

8.2.2.2 Output Noise

In most LDOs, the band gap is the dominant noise source. If a noise-reduction capacitor (C_{NR}) is used with the TPS799, the band gap does not contribute significantly to noise. Instead, noise is dominated by the output resistor divider and the error amplifier input. To minimize noise in a given application, use a 0.01-µF noise reduction capacitor. To further optimize noise, equivalent series resistance of the output capacitor can be set to approximately 0.2 Ω. This configuration maximizes phase margin in the control loop, reducing total output noise by up to 10%.

Noise can be referred to the feedback point; with C_{NR} = 0.01 µF total noise is approximately given by 式 1:

$$V_N = \frac{10.5\mu V_{RMS}}{V} \times V_{OUT} \tag{1}$$

8.2.2.3 Dropout Voltage

The TPS799 uses a PMOS pass transistor to achieve a low dropout voltage. When ($V_{IN} – V_{OUT}$) is less than the dropout voltage (V_{DO}), the PMOS pass device is in its linear region of operation and $r_{DS(on)}$ of the PMOS pass element is the input-to-output resistance. Because the PMOS device behaves like a resistor in dropout, V_{DO} approximately scales with the output current.

As with any linear regulator, PSRR degrades as ($V_{IN} – V_{OUT}$) approaches dropout. This effect is illustrated in 図 6-10 through 図 6-18 in the *Typical Characteristics* section.

8.2.2.4 Transient Response

As with any regulator, increasing the size of the output capacitor reduces over- and undershoot magnitude, but increases the duration of the transient response. The transient response of the TPS799 is enhanced by an active pulldown device that engages when the output overshoots by approximately 5% or more when the device is enabled. When enabled, the pulldown device behaves like a 350-Ω resistor to ground.

8.2.2.5 Minimum Load

The TPS799 is stable with no output load. To meet the specified accuracy, a minimum load of 500 µA is required. With loads less than 500 µA at junction temperatures near 125°C, the output can drift up enough to cause the output pulldown device to turn on. The output pulldown device limits voltage drift to 5% typically; however, ground current can increase by approximately 50 µA. In typical applications, the junction cannot reach high temperatures at light loads because there is no noticeable dissipated power. The specified ground current is then valid at no load in most applications.

8.2.2.6 Feedback Capacitor Requirements (TPS79901 Only)

The feedback capacitor, C_{FB}, shown in 図 8-2 is required for stability. For a parallel combination of R_1 and R_2 equal to 250 kΩ, any value from 3 pF to 1 nF can be used. Fixed voltage versions have an internal 30-pF feedback capacitor that is quick-charged at start up. The adjustable version does not have this quick-charge circuit, so use values below 5 pF to ensure fast start up; values above 47 pF can be used to implement an

Copyright © 2022 Texas Instruments Incorporated

output voltage soft-start. Larger value capacitors also improve noise slightly. The TPS79901 is stable in unity-gain configuration (OUT tied to FB) without C_{FB}.

8.2.3 Application Curve

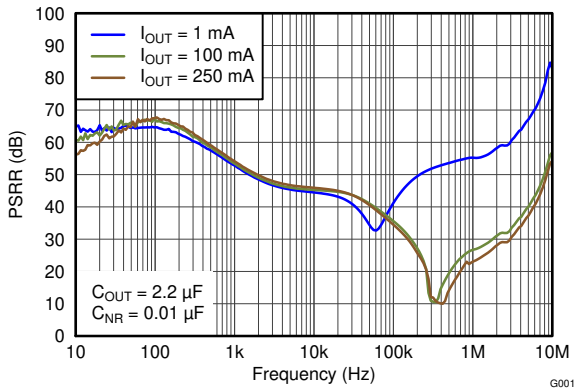

図 8-3. Power-Supply Rejection Ratio vs Frequency

8.3 What To Do and What Not To Do

Do place at least one 2.2-µF ceramic capacitor as close as possible to the OUT pin of the regulator.

Do not place the output capacitor more than 10 mm away from the regulator.

Do connect a 0.1-µF to 1-µF low equivalent series resistance (ESR) capacitor across the IN pin and GND input of the regulator.

Do not exceed the absolute maximum ratings.

9 Power Supply Recommendations

These devices are designed to operate from an input voltage supply range between 2.7 V and 6.5 V. The input voltage range provides adequate headroom in order for the device to have a regulated output. This input supply is well-regulated and stable. If the input supply is noisy, additional input capacitors with low ESR can help improve the output noise performance.

10 Layout

10.1 Layout Guidelines

10.1.1 Board Layout Recommendations to Improve PSRR and Noise Performance

To improve ac performance (such as PSRR, output noise, and transient response), design the board with separate ground planes for V_{IN} and V_{OUT}, with each ground plane connected only at the GND pin of the device. In addition, connect the bypass capacitor directly to the GND pin of the device.

10.1.2 Thermal Information

10.1.2.1 Thermal Protection

Thermal protection disables the output when the junction temperature rises to approximately 165°C, allowing the device to cool. When the junction temperature cools to approximately 145°C the output circuitry is again enabled. Depending on power dissipation, thermal resistance, and ambient temperature, the thermal protection circuit may cycle on and off. This cycling limits the dissipation of the regulator, protecting it from damage resulting from overheating.

Any tendency to activate the thermal protection circuit indicates excessive power dissipation or an inadequate heat sink. For reliable operation, limit junction temperature to 125°C maximum. To estimate the margin of safety in a complete design (including heat sink), increase the ambient temperature until the thermal protection is triggered; use worst-case loads and signal conditions. For good reliability, thermal protection triggers at least

Copyright © 2022 Texas Instruments Incorporated

35°C above the maximum expected ambient condition of a particular application. This configuration produces a worst-case junction temperature of 125°C at the highest expected ambient temperature and worst-case load.

The internal protection circuitry of the TPS799 is designed to protect against overload conditions. This circuitry is not intended to replace proper heat sinking. Continuously running the device into thermal shutdown degrades device reliability.

10.1.2.2 Power Dissipation

The ability to remove heat from the die is different for each package type, presenting different considerations in the PCB layout. The PCB area around the device that is free of other components moves the head from the device to the ambient air. Performance data for JEDEC low- and high-K boards are given in the *Thermal Information* table near the front of this data sheet. Using heavier copper increases the effectiveness in removing heat from the device. The addition of plated through-holes to heat-dissipating layers also improves heat-sink effectiveness.

Power dissipation depends on input voltage and load conditions. Power dissipation is equal to the product of the output current times the voltage drop across the output pass element, as shown in 式 2:

$$P_D = (V_{IN} - V_{OUT}) \cdot I_{OUT} \tag{2}$$

10.1.2.3 Package Mounting

Solder pad footprint recommendations for the TPS799 are available from the TI's website at www.ti.com.

10.2 Layout Example

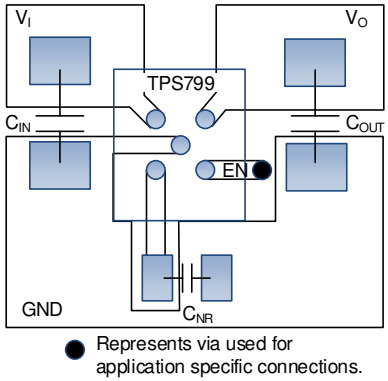

図 10-1. Layout Example

Copyright © 2022 Texas Instruments Incorporated

11 Device and Documentation Support

11.1 Device Support

11.1.1 Development Support

11.1.1.1 Evaluation Modules

An evaluation module (EVM) is available to assist in the initial circuit performance evaluation using the TPS799. This EVM, the TPS799 evaluation module, can be requested at the Texas Instruments web site through the product folders or purchased directly from the TI eStore.

11.1.1.2 Spice Models

Computer simulation of circuit performance using SPICE is often useful when analyzing the performance of analog circuits and systems. A SPICE model for the TPS799 is available through the product folders under simulation models.

11.1.2 Device Nomenclature

表 11-1. Device Nomenclature(1)

PRODUCT	V_{OUT}
TPS799**xx(x)** ***yyy z***	**xx(x)** is nominal output voltage (for example, 28 = 2.8 V, 285 = 2.85 V, 01 = Adjustable). **yyy** is package designator. **z** is package quantity.

(1) For the most current package and ordering information see the Package Option Addendum at the end of this document, or visit the device product folder at www.ti.com.

11.2 Documentation Support

11.2.1 Related Documentation

For related documentation, see the following:

- Texas Instruments, *Using New Thermal Metrics* application report
- Texas Instruments, *Semiconductor and IC Package Thermal Metrics* application report
- Texas Instruments, *TPS799xxEVM-105* user's guide

11.3 Receiving Notification of Documentation Updates

To receive notification of documentation updates, navigate to the device product folder on ti.com. Click on *Subscribe to updates* to register and receive a weekly digest of any product information that has changed. For change details, review the revision history included in any revised document.

11.4 サポート・リソース

TI E2E™ サポート・フォーラムは、エンジニアが検証済みの回答と設計に関するヒントをエキスパートから迅速かつ直接得ることができる場所です。既存の回答を検索したり、独自の質問をしたりすることで、設計で必要な支援を迅速に得ることができます。

リンクされているコンテンツは、該当する貢献者により、現状のまま提供されるものです。これらは TI の仕様を構成するものではなく、必ずしも TI の見解を反映したものではありません。TI の使用条件を参照してください。

11.5 Trademarks

TI E2E™ is a trademark of Texas Instruments.
Bluetooth® is a registered trademark of Bluetooth SIG, Inc.
すべての商標は、それぞれの所有者に帰属します。

11.6 Electrostatic Discharge Caution

This integrated circuit can be damaged by ESD. Texas Instruments recommends that all integrated circuits be handled with appropriate precautions. Failure to observe proper handling and installation procedures can cause damage.

ESD damage can range from subtle performance degradation to complete device failure. Precision integrated circuits may be more susceptible to damage because very small parametric changes could cause the device not to meet its published specifications.

11.7 Glossary

TI Glossary This glossary lists and explains terms, acronyms, and definitions.

12 Mechanical, Packaging, and Orderable Information

The following pages include mechanical, packaging, and orderable information. This information is the most current data available for the designated devices. This data is subject to change without notice and revision of this document. For browser-based versions of this data sheet, refer to the left-hand navigation.

Copyright © 2022 Texas Instruments Incorporated

PACKAGING INFORMATION

Orderable part number	Status (1)	Material type (2)	Package | Pins	Package qty | Carrier	RoHS (3)	Lead finish/ Ball material (4)	MSL rating/ Peak reflow (5)	Op temp (°C)	Part marking (6)
TPS79901DDCR	Active	Production	SOT-23-THIN (DDC) | 5	3000 | LARGE T&R	Yes	NIPDAU	Level-1-260C-UNLIM	-40 to 125	AWT
TPS79901DDCR.B	Active	Production	SOT-23-THIN (DDC) | 5	3000 | LARGE T&R	Yes	NIPDAU	Level-1-260C-UNLIM	-40 to 125	AWT
TPS79901DDCR1G4	Active	Production	SOT-23-THIN (DDC) | 5	3000 | LARGE T&R	Yes	NIPDAU	Level-1-260C-UNLIM	-40 to 125	AWT
TPS79901DDCR1G4.B	Active	Production	SOT-23-THIN (DDC) | 5	3000 | LARGE T&R	Yes	NIPDAU	Level-1-260C-UNLIM	-40 to 125	AWT
TPS79901DDCRG4	Active	Production	SOT-23-THIN (DDC) | 5	3000 | LARGE T&R	-	Call TI	Call TI	-40 to 125	
TPS79901DDCT	Active	Production	SOT-23-THIN (DDC) | 5	250 | SMALL T&R	Yes	NIPDAU	Level-1-260C-UNLIM	-40 to 125	AWT
TPS79901DDCT.B	Active	Production	SOT-23-THIN (DDC) | 5	250 | SMALL T&R	Yes	NIPDAU	Level-1-260C-UNLIM	-40 to 125	AWT
TPS79901DDCTG4	Active	Production	SOT-23-THIN (DDC) | 5	250 | SMALL T&R	-	Call TI	Call TI	-40 to 125	
TPS79901DRVR	Active	Production	WSON (DRV) | 6	3000 | LARGE T&R	Yes	NIPDAU	Level-1-260C-UNLIM	-40 to 125	AWT
TPS79901DRVR.B	Active	Production	WSON (DRV) | 6	3000 | LARGE T&R	Yes	NIPDAU	Level-1-260C-UNLIM	-40 to 125	AWT
TPS79901DRVRG4	Active	Production	WSON (DRV) | 6	3000 | LARGE T&R	Yes	NIPDAU	Level-1-260C-UNLIM	-40 to 125	AWT
TPS79901DRVT	Active	Production	WSON (DRV) | 6	250 | SMALL T&R	Yes	NIPDAU	Level-1-260C-UNLIM	-40 to 125	AWT
TPS79901DRVT.B	Active	Production	WSON (DRV) | 6	250 | SMALL T&R	Yes	NIPDAU	Level-1-260C-UNLIM	-40 to 125	AWT
TPS79901YZUR	Active	Production	DSBGA (YZU) | 5	3000 | LARGE T&R	Yes	SNAGCU	Level-1-260C-UNLIM	-40 to 125	E9
TPS79901YZUR.B	Active	Production	DSBGA (YZU) | 5	3000 | LARGE T&R	Yes	SNAGCU	Level-1-260C-UNLIM	-40 to 125	E9
TPS79901YZUT	Active	Production	DSBGA (YZU) | 5	250 | SMALL T&R	Yes	SNAGCU	Level-1-260C-UNLIM	-40 to 125	E9
TPS79901YZUT.B	Active	Production	DSBGA (YZU) | 5	250 | SMALL T&R	Yes	SNAGCU	Level-1-260C-UNLIM	-40 to 125	E9
TPS799125YZUR	Active	Production	DSBGA (YZU) | 5	3000 | LARGE T&R	Yes	SNAGCU	Level-1-260C-UNLIM	-40 to 125	YZ
TPS799125YZUR.B	Active	Production	DSBGA (YZU) | 5	3000 | LARGE T&R	Yes	SNAGCU	Level-1-260C-UNLIM	-40 to 125	YZ
TPS799125YZUT	Active	Production	DSBGA (YZU) | 5	250 | SMALL T&R	Yes	SNAGCU	Level-1-260C-UNLIM	-40 to 125	YZ
TPS799125YZUT.B	Active	Production	DSBGA (YZU) | 5	250 | SMALL T&R	Yes	SNAGCU	Level-1-260C-UNLIM	-40 to 125	YZ
TPS79912DDCR	Active	Production	SOT-23-THIN (DDC) | 5	3000 | LARGE T&R	Yes	NIPDAU	Level-1-260C-UNLIM	-40 to 125	CCF

Orderable part number	Status (1)	Material type (2)	Package | Pins	Package qty | Carrier	RoHS (3)	Lead finish/ Ball material (4)	MSL rating/ Peak reflow (5)	Op temp (°C)	Part marking (6)
TPS79912DDCR.B	Active	Production	SOT-23-THIN (DDC) | 5	3000 | LARGE T&R	Yes	NIPDAU	Level-1-260C-UNLIM	-40 to 125	CCF
TPS79912DDCT	Active	Production	SOT-23-THIN (DDC) | 5	250 | SMALL T&R	Yes	NIPDAU	Level-1-260C-UNLIM	-40 to 125	CCF
TPS79912DDCT.B	Active	Production	SOT-23-THIN (DDC) | 5	250 | SMALL T&R	Yes	NIPDAU	Level-1-260C-UNLIM	-40 to 125	CCF
TPS79912DRVR	Active	Production	WSON (DRV) | 6	3000 | LARGE T&R	Yes	NIPDAU	Level-1-260C-UNLIM	-40 to 125	CCF
TPS79912DRVR.B	Active	Production	WSON (DRV) | 6	3000 | LARGE T&R	Yes	NIPDAU	Level-1-260C-UNLIM	-40 to 125	CCF
TPS79912DRVT	Active	Production	WSON (DRV) | 6	250 | SMALL T&R	Yes	NIPDAU	Level-1-260C-UNLIM	-40 to 125	CCF
TPS79912DRVT.B	Active	Production	WSON (DRV) | 6	250 | SMALL T&R	Yes	NIPDAU	Level-1-260C-UNLIM	-40 to 125	CCF
TPS79912DRVTG4	Active	Production	WSON (DRV) | 6	250 | SMALL T&R	Yes	NIPDAU	Level-1-260C-UNLIM	-40 to 125	CCF
TPS79912YZUR	Active	Production	DSBGA (YZU) | 5	3000 | LARGE T&R	Yes	SNAGCU	Level-1-260C-UNLIM	-40 to 125	F8
TPS79912YZUR.B	Active	Production	DSBGA (YZU) | 5	3000 | LARGE T&R	Yes	SNAGCU	Level-1-260C-UNLIM	-40 to 125	F8
TPS79912YZUT	Active	Production	DSBGA (YZU) | 5	250 | SMALL T&R	Yes	SNAGCU	Level-1-260C-UNLIM	-40 to 125	F8
TPS79912YZUT.B	Active	Production	DSBGA (YZU) | 5	250 | SMALL T&R	Yes	SNAGCU	Level-1-260C-UNLIM	-40 to 125	F8
TPS79913DDCR	Active	Production	SOT-23-THIN (DDC) | 5	3000 | LARGE T&R	Yes	NIPDAU	Level-1-260C-UNLIM	-40 to 125	BUJ
TPS79913DDCR.B	Active	Production	SOT-23-THIN (DDC) | 5	3000 | LARGE T&R	Yes	NIPDAU	Level-1-260C-UNLIM	-40 to 125	BUJ
TPS79913DDCT	Active	Production	SOT-23-THIN (DDC) | 5	250 | SMALL T&R	Yes	NIPDAU	Level-1-260C-UNLIM	-40 to 125	BUJ
TPS79913DDCT.B	Active	Production	SOT-23-THIN (DDC) | 5	250 | SMALL T&R	Yes	NIPDAU	Level-1-260C-UNLIM	-40 to 125	BUJ
TPS79913YZUR	Active	Production	DSBGA (YZU) | 5	3000 | LARGE T&R	Yes	SNAGCU	Level-1-260C-UNLIM	-40 to 125	F9
TPS79913YZUR.B	Active	Production	DSBGA (YZU) | 5	3000 | LARGE T&R	Yes	SNAGCU	Level-1-260C-UNLIM	-40 to 125	F9
TPS79915DDCR	Active	Production	SOT-23-THIN (DDC) | 5	3000 | LARGE T&R	Yes	NIPDAU	Level-1-260C-UNLIM	-40 to 125	AWU
TPS79915DDCR.B	Active	Production	SOT-23-THIN (DDC) | 5	3000 | LARGE T&R	Yes	NIPDAU	Level-1-260C-UNLIM	-40 to 125	AWU
TPS79915DDCRG4	Active	Production	SOT-23-THIN (DDC) | 5	3000 | LARGE T&R	Yes	NIPDAU	Level-1-260C-UNLIM	-40 to 125	AWU
TPS79915DDCRG4.B	Active	Production	SOT-23-THIN (DDC) | 5	3000 | LARGE T&R	Yes	NIPDAU	Level-1-260C-UNLIM	-40 to 125	AWU

Orderable part number	Status (1)	Material type (2)	Package | Pins	Package qty | Carrier	RoHS (3)	Lead finish/ Ball material (4)	MSL rating/ Peak reflow (5)	Op temp (°C)	Part marking (6)
TPS79915DDCT	Active	Production	SOT-23-THIN (DDC) | 5	250 | SMALL T&R	Yes	NIPDAU	Level-1-260C-UNLIM	-40 to 125	AWU
TPS79915DDCT.B	Active	Production	SOT-23-THIN (DDC) | 5	250 | SMALL T&R	Yes	NIPDAU	Level-1-260C-UNLIM	-40 to 125	AWU
TPS79915DDCTG4	Active	Production	SOT-23-THIN (DDC) | 5	250 | SMALL T&R	-	Call TI	Call TI	-40 to 125	
TPS79915YZUR	Active	Production	DSBGA (YZU) | 5	3000 | LARGE T&R	Yes	SNAGCU	Level-1-260C-UNLIM	-40 to 125	EA
TPS79915YZUR.B	Active	Production	DSBGA (YZU) | 5	3000 | LARGE T&R	Yes	SNAGCU	Level-1-260C-UNLIM	-40 to 125	EA
TPS79915YZUT	Active	Production	DSBGA (YZU) | 5	250 | SMALL T&R	Yes	SNAGCU	Level-1-260C-UNLIM	-40 to 125	EA
TPS79915YZUT.B	Active	Production	DSBGA (YZU) | 5	250 | SMALL T&R	Yes	SNAGCU	Level-1-260C-UNLIM	-40 to 125	EA
TPS799185DDCR	Active	Production	SOT-23-THIN (DDC) | 5	3000 | LARGE T&R	Yes	NIPDAU	Level-1-260C-UNLIM	-40 to 125	CGP
TPS799185DDCR.B	Active	Production	SOT-23-THIN (DDC) | 5	3000 | LARGE T&R	Yes	NIPDAU	Level-1-260C-UNLIM	-40 to 125	CGP
TPS799185DDCRG4	Active	Production	SOT-23-THIN (DDC) | 5	3000 | LARGE T&R	Yes	NIPDAU	Level-1-260C-UNLIM	-40 to 125	CGP
TPS799185DDCRG4.B	Active	Production	SOT-23-THIN (DDC) | 5	3000 | LARGE T&R	Yes	NIPDAU	Level-1-260C-UNLIM	-40 to 125	CGP
TPS799185DDCT	Active	Production	SOT-23-THIN (DDC) | 5	250 | SMALL T&R	Yes	NIPDAU	Level-1-260C-UNLIM	-40 to 125	CGP
TPS799185DDCT.B	Active	Production	SOT-23-THIN (DDC) | 5	250 | SMALL T&R	Yes	NIPDAU	Level-1-260C-UNLIM	-40 to 125	CGP
TPS799185YZUR	Active	Production	DSBGA (YZU) | 5	3000 | LARGE T&R	Yes	SNAGCU	Level-1-260C-UNLIM	-40 to 125	ZA
TPS799185YZUR.B	Active	Production	DSBGA (YZU) | 5	3000 | LARGE T&R	Yes	SNAGCU	Level-1-260C-UNLIM	-40 to 125	ZA
TPS799185YZUT	Active	Production	DSBGA (YZU) | 5	250 | SMALL T&R	Yes	SNAGCU	Level-1-260C-UNLIM	-40 to 125	ZA
TPS799185YZUT.B	Active	Production	DSBGA (YZU) | 5	250 | SMALL T&R	Yes	SNAGCU	Level-1-260C-UNLIM	-40 to 125	ZA
TPS79918DDCR	Active	Production	SOT-23-THIN (DDC) | 5	3000 | LARGE T&R	Yes	NIPDAU	Level-1-260C-UNLIM	-40 to 125	AWV
TPS79918DDCR.B	Active	Production	SOT-23-THIN (DDC) | 5	3000 | LARGE T&R	Yes	NIPDAU	Level-1-260C-UNLIM	-40 to 125	AWV
TPS79918DDCR1G4	Active	Production	SOT-23-THIN (DDC) | 5	3000 | LARGE T&R	Yes	NIPDAU	Level-1-260C-UNLIM	-40 to 125	AWV
TPS79918DDCR1G4.B	Active	Production	SOT-23-THIN (DDC) | 5	3000 | LARGE T&R	Yes	NIPDAU	Level-1-260C-UNLIM	-40 to 125	AWV

Orderable part number	Status (1)	Material type (2)	Package | Pins	Package qty | Carrier	RoHS (3)	Lead finish/ Ball material (4)	MSL rating/ Peak reflow (5)	Op temp (°C)	Part marking (6)
TPS79918DDCRG4	Active	Production	SOT-23-THIN (DDC) | 5	3000 | LARGE T&R	-	Call TI	Call TI	-40 to 125	
TPS79918DDCT	Active	Production	SOT-23-THIN (DDC) | 5	250 | SMALL T&R	Yes	NIPDAU	Level-1-260C-UNLIM	-40 to 125	AWV
TPS79918DDCT.B	Active	Production	SOT-23-THIN (DDC) | 5	250 | SMALL T&R	Yes	NIPDAU	Level-1-260C-UNLIM	-40 to 125	AWV
TPS79918DDCTG4	Active	Production	SOT-23-THIN (DDC) | 5	250 | SMALL T&R	-	Call TI	Call TI	-40 to 125	
TPS79918DRVR	Active	Production	WSON (DRV) | 6	3000 | LARGE T&R	Yes	NIPDAU	Level-1-260C-UNLIM	-40 to 125	AWV
TPS79918DRVR.B	Active	Production	WSON (DRV) | 6	3000 | LARGE T&R	Yes	NIPDAU	Level-1-260C-UNLIM	-40 to 125	AWV
TPS79918DRVT	Active	Production	WSON (DRV) | 6	250 | SMALL T&R	Yes	NIPDAU	Level-1-260C-UNLIM	-40 to 125	AWV
TPS79918DRVT.B	Active	Production	WSON (DRV) | 6	250 | SMALL T&R	Yes	NIPDAU	Level-1-260C-UNLIM	-40 to 125	AWV
TPS79918YZUR	Active	Production	DSBGA (YZU) | 5	3000 | LARGE T&R	Yes	SNAGCU	Level-1-260C-UNLIM	-40 to 125	EB
TPS79918YZUR.B	Active	Production	DSBGA (YZU) | 5	3000 | LARGE T&R	Yes	SNAGCU	Level-1-260C-UNLIM	-40 to 125	EB
TPS79918YZUT	Active	Production	DSBGA (YZU) | 5	250 | SMALL T&R	Yes	SNAGCU	Level-1-260C-UNLIM	-40 to 125	EB
TPS79918YZUT.B	Active	Production	DSBGA (YZU) | 5	250 | SMALL T&R	Yes	SNAGCU	Level-1-260C-UNLIM	-40 to 125	EB
TPS799195DRVR	Active	Production	WSON (DRV) | 6	3000 | LARGE T&R	Yes	NIPDAU	Level-1-260C-UNLIM	-40 to 125	BTP
TPS799195DRVR.B	Active	Production	WSON (DRV) | 6	3000 | LARGE T&R	Yes	NIPDAU	Level-1-260C-UNLIM	-40 to 125	BTP
TPS799195DRVT	Active	Production	WSON (DRV) | 6	250 | SMALL T&R	Yes	NIPDAU	Level-1-260C-UNLIM	-40 to 125	BTP
TPS799195DRVT.B	Active	Production	WSON (DRV) | 6	250 | SMALL T&R	Yes	NIPDAU	Level-1-260C-UNLIM	-40 to 125	BTP
TPS799195YZUR	Active	Production	DSBGA (YZU) | 5	3000 | LARGE T&R	Yes	SNAGCU	Level-1-260C-UNLIM	-40 to 125	AO
TPS799195YZUR.B	Active	Production	DSBGA (YZU) | 5	3000 | LARGE T&R	Yes	SNAGCU	Level-1-260C-UNLIM	-40 to 125	AO
TPS799195YZUT	Active	Production	DSBGA (YZU) | 5	250 | SMALL T&R	Yes	SNAGCU	Level-1-260C-UNLIM	-40 to 125	AO
TPS799195YZUT.B	Active	Production	DSBGA (YZU) | 5	250 | SMALL T&R	Yes	SNAGCU	Level-1-260C-UNLIM	-40 to 125	AO
TPS79919YZUT	Active	Production	DSBGA (YZU) | 5	250 | SMALL T&R	Yes	SNAGCU	Level-1-260C-UNLIM	-40 to 125	F6
TPS79919YZUT.B	Active	Production	DSBGA (YZU) | 5	250 | SMALL T&R	Yes	SNAGCU	Level-1-260C-UNLIM	-40 to 125	F6
TPS79920YZUT	Active	Production	DSBGA (YZU) | 5	250 | SMALL T&R	Yes	SNAGCU	Level-1-260C-UNLIM	-40 to 125	GA
TPS79920YZUT.B	Active	Production	DSBGA (YZU) | 5	250 | SMALL T&R	Yes	SNAGCU	Level-1-260C-UNLIM	-40 to 125	GA
TPS79921YZUR	Active	Production	DSBGA (YZU) | 5	3000 | LARGE T&R	Yes	SNAGCU	Level-1-260C-UNLIM	-40 to 125	G7
TPS79921YZUR.B	Active	Production	DSBGA (YZU) | 5	3000 | LARGE T&R	Yes	SNAGCU	Level-1-260C-UNLIM	-40 to 125	G7
TPS79925DDCR	Active	Production	SOT-23-THIN (DDC) | 5	3000 | LARGE T&R	Yes	NIPDAU	Level-1-260C-UNLIM	-40 to 125	AWW

Orderable part number	Status (1)	Material type (2)	Package | Pins	Package qty | Carrier	RoHS (3)	Lead finish/ Ball material (4)	MSL rating/ Peak reflow (5)	Op temp (°C)	Part marking (6)
TPS79925DDCR.B	Active	Production	SOT-23-THIN (DDC) | 5	3000 | LARGE T&R	Yes	NIPDAU	Level-1-260C-UNLIM	-40 to 125	AWW
TPS79925DDCRG4	Active	Production	SOT-23-THIN (DDC) | 5	3000 | LARGE T&R	Yes	NIPDAU	Level-1-260C-UNLIM	-40 to 125	AWW
TPS79925DDCRG4.B	Active	Production	SOT-23-THIN (DDC) | 5	3000 | LARGE T&R	Yes	NIPDAU	Level-1-260C-UNLIM	-40 to 125	AWW
TPS79925DDCT	Active	Production	SOT-23-THIN (DDC) | 5	250 | SMALL T&R	Yes	NIPDAU	Level-1-260C-UNLIM	-40 to 125	AWW
TPS79925DDCT.B	Active	Production	SOT-23-THIN (DDC) | 5	250 | SMALL T&R	Yes	NIPDAU	Level-1-260C-UNLIM	-40 to 125	AWW
TPS79925YZUR	Active	Production	DSBGA (YZU) | 5	3000 | LARGE T&R	Yes	SNAGCU	Level-1-260C-UNLIM	-40 to 125	EC
TPS79925YZUR.B	Active	Production	DSBGA (YZU) | 5	3000 | LARGE T&R	Yes	SNAGCU	Level-1-260C-UNLIM	-40 to 125	EC
TPS79925YZUT	Active	Production	DSBGA (YZU) | 5	250 | SMALL T&R	Yes	SNAGCU	Level-1-260C-UNLIM	-40 to 125	EC
TPS79925YZUT.B	Active	Production	DSBGA (YZU) | 5	250 | SMALL T&R	Yes	SNAGCU	Level-1-260C-UNLIM	-40 to 125	EC
TPS79926YZUR	Active	Production	DSBGA (YZU) | 5	3000 | LARGE T&R	Yes	SNAGCU	Level-1-260C-UNLIM	-40 to 125	F3
TPS79926YZUR.B	Active	Production	DSBGA (YZU) | 5	3000 | LARGE T&R	Yes	SNAGCU	Level-1-260C-UNLIM	-40 to 125	F3
TPS79926YZUT	Active	Production	DSBGA (YZU) | 5	250 | SMALL T&R	Yes	SNAGCU	Level-1-260C-UNLIM	-40 to 125	F3
TPS79926YZUT.B	Active	Production	DSBGA (YZU) | 5	250 | SMALL T&R	Yes	SNAGCU	Level-1-260C-UNLIM	-40 to 125	F3
TPS79927DDCR	Active	Production	SOT-23-THIN (DDC) | 5	3000 | LARGE T&R	Yes	NIPDAU	Level-1-260C-UNLIM	-40 to 125	BWE
TPS79927DDCR.B	Active	Production	SOT-23-THIN (DDC) | 5	3000 | LARGE T&R	Yes	NIPDAU	Level-1-260C-UNLIM	-40 to 125	BWE
TPS79927DDCT	Active	Production	SOT-23-THIN (DDC) | 5	250 | SMALL T&R	Yes	NIPDAU	Level-1-260C-UNLIM	-40 to 125	BWE
TPS79927DDCT.B	Active	Production	SOT-23-THIN (DDC) | 5	250 | SMALL T&R	Yes	NIPDAU	Level-1-260C-UNLIM	-40 to 125	BWE
TPS79927DRVR	Active	Production	WSON (DRV) | 6	3000 | LARGE T&R	Yes	NIPDAU	Level-1-260C-UNLIM	-40 to 125	BPM
TPS79927DRVR.B	Active	Production	WSON (DRV) | 6	3000 | LARGE T&R	Yes	NIPDAU	Level-1-260C-UNLIM	-40 to 125	BPM
TPS79927DRVT	Active	Production	WSON (DRV) | 6	250 | SMALL T&R	Yes	NIPDAU	Level-1-260C-UNLIM	-40 to 125	BPM
TPS79927DRVT.B	Active	Production	WSON (DRV) | 6	250 | SMALL T&R	Yes	NIPDAU	Level-1-260C-UNLIM	-40 to 125	BPM
TPS79927YZUT	Active	Production	DSBGA (YZU) | 5	250 | SMALL T&R	Yes	SNAGCU	Level-1-260C-UNLIM	-40 to 125	F5
TPS79927YZUT.B	Active	Production	DSBGA (YZU) | 5	250 | SMALL T&R	Yes	SNAGCU	Level-1-260C-UNLIM	-40 to 125	F5

Orderable part number	Status (1)	Material type (2)	Package | Pins	Package qty | Carrier	RoHS (3)	Lead finish/ Ball material (4)	MSL rating/ Peak reflow (5)	Op temp (°C)	Part marking (6)
TPS799285DDCR	Active	Production	SOT-23-THIN (DDC) | 5	3000 | LARGE T&R	Yes	NIPDAU	Level-1-260C-UNLIM	-40 to 125	AXY
TPS799285DDCR.B	Active	Production	SOT-23-THIN (DDC) | 5	3000 | LARGE T&R	Yes	NIPDAU	Level-1-260C-UNLIM	-40 to 125	AXY
TPS799285DDCT	Active	Production	SOT-23-THIN (DDC) | 5	250 | SMALL T&R	Yes	NIPDAU	Level-1-260C-UNLIM	-40 to 125	AXY
TPS799285DDCT.B	Active	Production	SOT-23-THIN (DDC) | 5	250 | SMALL T&R	Yes	NIPDAU	Level-1-260C-UNLIM	-40 to 125	AXY
TPS799285DRVR	Active	Production	WSON (DRV) | 6	3000 | LARGE T&R	Yes	NIPDAU	Level-1-260C-UNLIM	-40 to 125	BST
TPS799285DRVR.B	Active	Production	WSON (DRV) | 6	3000 | LARGE T&R	Yes	NIPDAU	Level-1-260C-UNLIM	-40 to 125	BST
TPS799285DRVT	Active	Production	WSON (DRV) | 6	250 | SMALL T&R	Yes	NIPDAU	Level-1-260C-UNLIM	-40 to 125	BST
TPS799285DRVT.B	Active	Production	WSON (DRV) | 6	250 | SMALL T&R	Yes	NIPDAU	Level-1-260C-UNLIM	-40 to 125	BST
TPS799285YZUR	Active	Production	DSBGA (YZU) | 5	3000 | LARGE T&R	Yes	SNAGCU	Level-1-260C-UNLIM	-40 to 125	EE
TPS799285YZUR.B	Active	Production	DSBGA (YZU) | 5	3000 | LARGE T&R	Yes	SNAGCU	Level-1-260C-UNLIM	-40 to 125	EE
TPS79928DDCR	Active	Production	SOT-23-THIN (DDC) | 5	3000 | LARGE T&R	Yes	NIPDAU	Level-1-260C-UNLIM	-40 to 125	AWX
TPS79928DDCR.B	Active	Production	SOT-23-THIN (DDC) | 5	3000 | LARGE T&R	Yes	NIPDAU	Level-1-260C-UNLIM	-40 to 125	AWX
TPS79928DDCT	Active	Production	SOT-23-THIN (DDC) | 5	250 | SMALL T&R	Yes	NIPDAU	Level-1-260C-UNLIM	-40 to 125	AWX
TPS79928DDCT.B	Active	Production	SOT-23-THIN (DDC) | 5	250 | SMALL T&R	Yes	NIPDAU	Level-1-260C-UNLIM	-40 to 125	AWX
TPS79928DRVR	Active	Production	WSON (DRV) | 6	3000 | LARGE T&R	Yes	NIPDAU	Level-1-260C-UNLIM	-40 to 125	AWX
TPS79928DRVR.B	Active	Production	WSON (DRV) | 6	3000 | LARGE T&R	Yes	NIPDAU	Level-1-260C-UNLIM	-40 to 125	AWX
TPS79928DRVT	Active	Production	WSON (DRV) | 6	250 | SMALL T&R	Yes	NIPDAU	Level-1-260C-UNLIM	-40 to 125	AWX
TPS79928DRVT.B	Active	Production	WSON (DRV) | 6	250 | SMALL T&R	Yes	NIPDAU	Level-1-260C-UNLIM	-40 to 125	AWX
TPS79928YZUR	Active	Production	DSBGA (YZU) | 5	3000 | LARGE T&R	Yes	SNAGCU	Level-1-260C-UNLIM	-40 to 125	ED
TPS79928YZUR.B	Active	Production	DSBGA (YZU) | 5	3000 | LARGE T&R	Yes	SNAGCU	Level-1-260C-UNLIM	-40 to 125	ED
TPS79928YZUT	Active	Production	DSBGA (YZU) | 5	250 | SMALL T&R	Yes	SNAGCU	Level-1-260C-UNLIM	-40 to 125	ED
TPS79928YZUT.B	Active	Production	DSBGA (YZU) | 5	250 | SMALL T&R	Yes	SNAGCU	Level-1-260C-UNLIM	-40 to 125	ED
TPS79930DDCR	Active	Production	SOT-23-THIN (DDC) | 5	3000 | LARGE T&R	Yes	NIPDAU	Level-1-260C-UNLIM	-40 to 125	AXZ

Orderable part number	Status (1)	Material type (2)	Package | Pins	Package qty | Carrier	RoHS (3)	Lead finish/ Ball material (4)	MSL rating/ Peak reflow (5)	Op temp (°C)	Part marking (6)
TPS79930DDCR.B	Active	Production	SOT-23-THIN (DDC) | 5	3000 | LARGE T&R	Yes	NIPDAU	Level-1-260C-UNLIM	-40 to 125	AXZ
TPS79930DDCR1G4	Active	Production	SOT-23-THIN (DDC) | 5	3000 | LARGE T&R	Yes	NIPDAU	Level-1-260C-UNLIM	-40 to 125	AXZ
TPS79930DDCR1G4.B	Active	Production	SOT-23-THIN (DDC) | 5	3000 | LARGE T&R	Yes	NIPDAU	Level-1-260C-UNLIM	-40 to 125	AXZ
TPS79930DDCRG4	Active	Production	SOT-23-THIN (DDC) | 5	3000 | LARGE T&R	-	Call TI	Call TI	-40 to 125	
TPS79930DDCT	Active	Production	SOT-23-THIN (DDC) | 5	250 | SMALL T&R	Yes	NIPDAU	Level-1-260C-UNLIM	-40 to 125	AXZ
TPS79930DDCT.B	Active	Production	SOT-23-THIN (DDC) | 5	250 | SMALL T&R	Yes	NIPDAU	Level-1-260C-UNLIM	-40 to 125	AXZ
TPS79930DDCTG4	Active	Production	SOT-23-THIN (DDC) | 5	250 | SMALL T&R	-	Call TI	Call TI	-40 to 125	
TPS79930YZUR	Active	Production	DSBGA (YZU) | 5	3000 | LARGE T&R	Yes	SNAGCU	Level-1-260C-UNLIM	-40 to 125	EF
TPS79930YZUR.B	Active	Production	DSBGA (YZU) | 5	3000 | LARGE T&R	Yes	SNAGCU	Level-1-260C-UNLIM	-40 to 125	EF
TPS79930YZUT	Active	Production	DSBGA (YZU) | 5	250 | SMALL T&R	Yes	SNAGCU	Level-1-260C-UNLIM	-40 to 125	EF
TPS79930YZUT.B	Active	Production	DSBGA (YZU) | 5	250 | SMALL T&R	Yes	SNAGCU	Level-1-260C-UNLIM	-40 to 125	EF
TPS799315DDCR	Active	Production	SOT-23-THIN (DDC) | 5	3000 | LARGE T&R	Yes	NIPDAU	Level-1-260C-UNLIM	-40 to 125	CGQ
TPS799315DDCR.B	Active	Production	SOT-23-THIN (DDC) | 5	3000 | LARGE T&R	Yes	NIPDAU	Level-1-260C-UNLIM	-40 to 125	CGQ
TPS799315DDCRG4	Active	Production	SOT-23-THIN (DDC) | 5	3000 | LARGE T&R	Yes	NIPDAU	Level-1-260C-UNLIM	-40 to 125	CGQ
TPS799315DDCRG4.B	Active	Production	SOT-23-THIN (DDC) | 5	3000 | LARGE T&R	Yes	NIPDAU	Level-1-260C-UNLIM	-40 to 125	CGQ
TPS799315DDCT	Active	Production	SOT-23-THIN (DDC) | 5	250 | SMALL T&R	Yes	NIPDAU	Level-1-260C-UNLIM	-40 to 125	CGQ
TPS799315DDCT.B	Active	Production	SOT-23-THIN (DDC) | 5	250 | SMALL T&R	Yes	NIPDAU	Level-1-260C-UNLIM	-40 to 125	CGQ
TPS799315YZUR	Active	Production	DSBGA (YZU) | 5	3000 | LARGE T&R	Yes	SNAGCU	Level-1-260C-UNLIM	-40 to 125	GP
TPS799315YZUR.B	Active	Production	DSBGA (YZU) | 5	3000 | LARGE T&R	Yes	SNAGCU	Level-1-260C-UNLIM	-40 to 125	GP
TPS799315YZUT	Active	Production	DSBGA (YZU) | 5	250 | SMALL T&R	Yes	SNAGCU	Level-1-260C-UNLIM	-40 to 125	GP
TPS799315YZUT.B	Active	Production	DSBGA (YZU) | 5	250 | SMALL T&R	Yes	SNAGCU	Level-1-260C-UNLIM	-40 to 125	GP

Orderable part number	Status (1)	Material type (2)	Package | Pins	Package qty | Carrier	RoHS (3)	Lead finish/ Ball material (4)	MSL rating/ Peak reflow (5)	Op temp (°C)	Part marking (6)
TPS79932YZUR	Active	Production	DSBGA (YZU) | 5	3000 | LARGE T&R	Yes	SNAGCU	Level-1-260C-UNLIM	-40 to 125	(F4, FY)
TPS79932YZUR.B	Active	Production	DSBGA (YZU) | 5	3000 | LARGE T&R	Yes	SNAGCU	Level-1-260C-UNLIM	-40 to 125	(F4, FY)
TPS79933DDCR	Active	Production	SOT-23-THIN (DDC) | 5	3000 | LARGE T&R	Yes	NIPDAU	Level-1-260C-UNLIM	-40 to 125	AXX
TPS79933DDCR.B	Active	Production	SOT-23-THIN (DDC) | 5	3000 | LARGE T&R	Yes	NIPDAU	Level-1-260C-UNLIM	-40 to 125	AXX
TPS79933DDCR1G4	Active	Production	SOT-23-THIN (DDC) | 5	3000 | LARGE T&R	Yes	NIPDAU	Level-1-260C-UNLIM	-40 to 125	AXX
TPS79933DDCR1G4.B	Active	Production	SOT-23-THIN (DDC) | 5	3000 | LARGE T&R	Yes	NIPDAU	Level-1-260C-UNLIM	-40 to 125	AXX
TPS79933DDCRG4	Active	Production	SOT-23-THIN (DDC) | 5	3000 | LARGE T&R	-	Call TI	Call TI	-40 to 125	
TPS79933DDCT	Active	Production	SOT-23-THIN (DDC) | 5	250 | SMALL T&R	Yes	NIPDAU	Level-1-260C-UNLIM	-40 to 125	AXX
TPS79933DDCT.B	Active	Production	SOT-23-THIN (DDC) | 5	250 | SMALL T&R	Yes	NIPDAU	Level-1-260C-UNLIM	-40 to 125	AXX
TPS79933DDCTG4	Active	Production	SOT-23-THIN (DDC) | 5	250 | SMALL T&R	-	Call TI	Call TI	-40 to 125	
TPS79933DRVR	Active	Production	WSON (DRV) | 6	3000 | LARGE T&R	Yes	NIPDAU	Level-1-260C-UNLIM	-40 to 125	AXX
TPS79933DRVR.B	Active	Production	WSON (DRV) | 6	3000 | LARGE T&R	Yes	NIPDAU	Level-1-260C-UNLIM	-40 to 125	AXX
TPS79933DRVRG4	Active	Production	WSON (DRV) | 6	3000 | LARGE T&R	Yes	NIPDAU	Level-1-260C-UNLIM	-40 to 125	AXX
TPS79933DRVT	Active	Production	WSON (DRV) | 6	250 | SMALL T&R	Yes	NIPDAU	Level-1-260C-UNLIM	-40 to 125	AXX
TPS79933DRVT.B	Active	Production	WSON (DRV) | 6	250 | SMALL T&R	Yes	NIPDAU	Level-1-260C-UNLIM	-40 to 125	AXX
TPS79933DRVTG4	Active	Production	WSON (DRV) | 6	250 | SMALL T&R	Yes	NIPDAU	Level-1-260C-UNLIM	-40 to 125	AXX
TPS79933YZUR	Active	Production	DSBGA (YZU) | 5	3000 | LARGE T&R	Yes	SNAGCU	Level-1-260C-UNLIM	-40 to 125	EG
TPS79933YZUR.B	Active	Production	DSBGA (YZU) | 5	3000 | LARGE T&R	Yes	SNAGCU	Level-1-260C-UNLIM	-40 to 125	EG
TPS79933YZUT	Active	Production	DSBGA (YZU) | 5	250 | SMALL T&R	Yes	SNAGCU	Level-1-260C-UNLIM	-40 to 125	EG
TPS79933YZUT.B	Active	Production	DSBGA (YZU) | 5	250 | SMALL T&R	Yes	SNAGCU	Level-1-260C-UNLIM	-40 to 125	EG
TPS79942DDCR	Active	Production	SOT-23-THIN (DDC) | 5	3000 | LARGE T&R	Yes	NIPDAU	Level-1-260C-UNLIM	-40 to 125	CJQ
TPS79942DDCR.B	Active	Production	SOT-23-THIN (DDC) | 5	3000 | LARGE T&R	Yes	NIPDAU	Level-1-260C-UNLIM	-40 to 125	CJQ
TPS79942DDCR1G4	Active	Production	SOT-23-THIN (DDC) | 5	3000 | LARGE T&R	Yes	NIPDAU	Level-1-260C-UNLIM	-40 to 125	CJQ

Orderable part number	Status (1)	Material type (2)	Package | Pins	Package qty | Carrier	RoHS (3)	Lead finish/ Ball material (4)	MSL rating/ Peak reflow (5)	Op temp (°C)	Part marking (6)
TPS79942DDCR1G4.B	Active	Production	SOT-23-THIN (DDC) | 5	3000 | LARGE T&R	Yes	NIPDAU	Level-1-260C-UNLIM	-40 to 125	CJQ
TPS79942DDCRG4	Active	Production	SOT-23-THIN (DDC) | 5	3000 | LARGE T&R	-	Call TI	Call TI	-40 to 125	
TPS79942DDCT	Active	Production	SOT-23-THIN (DDC) | 5	250 | SMALL T&R	Yes	NIPDAU	Level-1-260C-UNLIM	-40 to 125	CJQ
TPS79942DDCT.B	Active	Production	SOT-23-THIN (DDC) | 5	250 | SMALL T&R	Yes	NIPDAU	Level-1-260C-UNLIM	-40 to 125	CJQ
TPS79945YZUR	Active	Production	DSBGA (YZU) | 5	3000 | LARGE T&R	Yes	SNAGCU	Level-1-260C-UNLIM	-40 to 125	FK
TPS79945YZUR.B	Active	Production	DSBGA (YZU) | 5	3000 | LARGE T&R	Yes	SNAGCU	Level-1-260C-UNLIM	-40 to 125	FK
TPS79945YZUT	Active	Production	DSBGA (YZU) | 5	250 | SMALL T&R	Yes	SNAGCU	Level-1-260C-UNLIM	-40 to 125	FK
TPS79945YZUT.B	Active	Production	DSBGA (YZU) | 5	250 | SMALL T&R	Yes	SNAGCU	Level-1-260C-UNLIM	-40 to 125	FK

(1) **Status:** For more details on status, see our product life cycle.

(2) **Material type:** When designated, preproduction parts are prototypes/experimental devices, and are not yet approved or released for full production. Testing and final process, including without limitation quality assurance, reliability performance testing, and/or process qualification, may not yet be complete, and this item is subject to further changes or possible discontinuation. If available for ordering, purchases will be subject to an additional waiver at checkout, and are intended for early internal evaluation purposes only. These items are sold without warranties of any kind.

(3) **RoHS values:** Yes, No, RoHS Exempt. See the TI RoHS Statement for additional information and value definition.

(4) **Lead finish/Ball material:** Parts may have multiple material finish options. Finish options are separated by a vertical ruled line. Lead finish/Ball material values may wrap to two lines if the finish value exceeds the maximum column width.

(5) **MSL rating/Peak reflow:** The moisture sensitivity level ratings and peak solder (reflow) temperatures. In the event that a part has multiple moisture sensitivity ratings, only the lowest level per JEDEC standards is shown. Refer to the shipping label for the actual reflow temperature that will be used to mount the part to the printed circuit board.

(6) **Part marking:** There may be an additional marking, which relates to the logo, the lot trace code information, or the environmental category of the part.

Multiple part markings will be inside parentheses. Only one part marking contained in parentheses and separated by a "~" will appear on a part. If a line is indented then it is a continuation of the previous line and the two combined represent the entire part marking for that device.

Important Information and Disclaimer: The information provided on this page represents TI's knowledge and belief as of the date that it is provided. TI bases its knowledge and belief on information provided by third parties, and makes no representation or warranty as to the accuracy of such information. Efforts are underway to better integrate information from third parties. TI has taken and continues to take reasonable steps to provide representative

and accurate information but may not have conducted destructive testing or chemical analysis on incoming materials and chemicals. TI and TI suppliers consider certain information to be proprietary, and thus CAS numbers and other limited information may not be available for release.

In no event shall TI's liability arising out of such information exceed the total purchase price of the TI part(s) at issue in this document sold by TI to Customer on an annual basis.

OTHER QUALIFIED VERSIONS OF TPS799 :

- Automotive : TPS799-Q1

NOTE: Qualified Version Definitions:

- Automotive - Q100 devices qualified for high-reliability automotive applications targeting zero defects

TAPE AND REEL INFORMATION

REEL DIMENSIONS

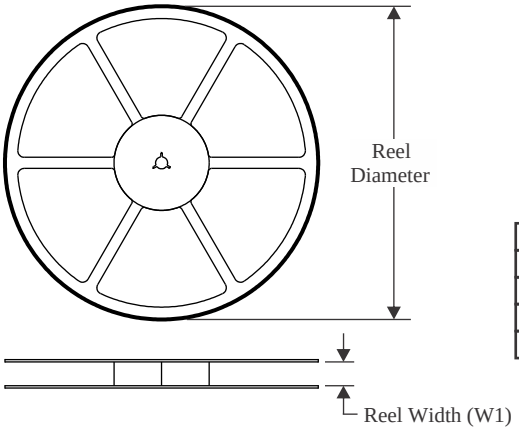

TAPE DIMENSIONS

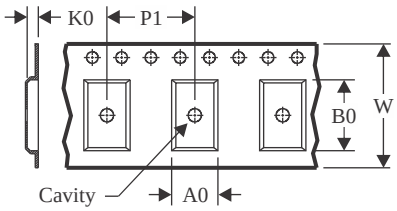

A0	Dimension designed to accommodate the component width
B0	Dimension designed to accommodate the component length
K0	Dimension designed to accommodate the component thickness
W	Overall width of the carrier tape
P1	Pitch between successive cavity centers

QUADRANT ASSIGNMENTS FOR PIN 1 ORIENTATION IN TAPE

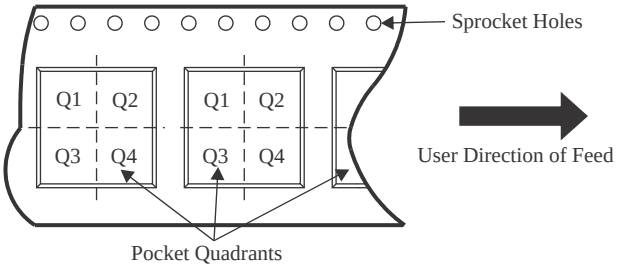

*All dimensions are nominal

Device	Package Type	Package Drawing	Pins	SPQ	Reel Diameter (mm)	Reel Width W1 (mm)	A0 (mm)	B0 (mm)	K0 (mm)	P1 (mm)	W (mm)	Pin1 Quadrant
TPS79901DDCR	SOT-23-THIN	DDC	5	3000	179.0	8.4	3.2	3.2	1.4	4.0	8.0	Q3
TPS79901DDCR	SOT-23-THIN	DDC	5	3000	180.0	8.4	3.1	3.05	1.1	4.0	8.0	Q3
TPS79901DDCR1G4	SOT-23-THIN	DDC	5	3000	180.0	8.4	3.1	3.05	1.1	4.0	8.0	Q3
TPS79901DDCT	SOT-23-THIN	DDC	5	250	180.0	8.4	3.1	3.05	1.1	4.0	8.0	Q3
TPS79901DDCT	SOT-23-THIN	DDC	5	250	179.0	8.4	3.2	3.2	1.4	4.0	8.0	Q3
TPS79901DRVT	WSON	DRV	6	250	179.0	8.4	2.2	2.2	1.2	4.0	8.0	Q2
TPS79901YZUR	DSBGA	YZU	5	3000	180.0	8.4	1.07	1.42	0.74	4.0	8.0	Q1
TPS79901YZUT	DSBGA	YZU	5	250	180.0	8.4	1.07	1.42	0.74	4.0	8.0	Q1
TPS799125YZUR	DSBGA	YZU	5	3000	180.0	8.4	1.07	1.42	0.74	4.0	8.0	Q1
TPS799125YZUT	DSBGA	YZU	5	250	180.0	8.4	1.07	1.42	0.74	4.0	8.0	Q1
TPS79912DDCR	SOT-23-THIN	DDC	5	3000	179.0	8.4	3.2	3.2	1.4	4.0	8.0	Q3

Device	Package Type	Package Drawing	Pins	SPQ	Reel Diameter (mm)	Reel Width W1 (mm)	A0 (mm)	B0 (mm)	K0 (mm)	P1 (mm)	W (mm)	Pin1 Quadrant
TPS79912DDCT	SOT-23-THIN	DDC	5	250	179.0	8.4	3.2	3.2	1.4	4.0	8.0	Q3
TPS79912DRVT	WSON	DRV	6	250	179.0	8.4	2.2	2.2	1.2	4.0	8.0	Q2
TPS79912YZUR	DSBGA	YZU	5	3000	180.0	8.4	1.07	1.42	0.74	4.0	8.0	Q1
TPS79912YZUT	DSBGA	YZU	5	250	180.0	8.4	1.07	1.42	0.74	4.0	8.0	Q1
TPS79913DDCR	SOT-23-THIN	DDC	5	3000	179.0	8.4	3.2	3.2	1.4	4.0	8.0	Q3
TPS79913DDCT	SOT-23-THIN	DDC	5	250	179.0	8.4	3.2	3.2	1.4	4.0	8.0	Q3
TPS79913YZUR	DSBGA	YZU	5	3000	180.0	8.4	1.07	1.42	0.74	4.0	8.0	Q1
TPS79915DDCR	SOT-23-THIN	DDC	5	3000	179.0	8.4	3.2	3.2	1.4	4.0	8.0	Q3
TPS79915DDCRG4	SOT-23-THIN	DDC	5	3000	179.0	8.4	3.2	3.2	1.4	4.0	8.0	Q3
TPS79915DDCT	SOT-23-THIN	DDC	5	250	179.0	8.4	3.2	3.2	1.4	4.0	8.0	Q3
TPS79915YZUR	DSBGA	YZU	5	3000	180.0	8.4	1.07	1.42	0.74	4.0	8.0	Q1
TPS79915YZUT	DSBGA	YZU	5	250	180.0	8.4	1.07	1.42	0.74	4.0	8.0	Q1
TPS799185DDCR	SOT-23-THIN	DDC	5	3000	179.0	8.4	3.2	3.2	1.4	4.0	8.0	Q3
TPS799185DDCRG4	SOT-23-THIN	DDC	5	3000	179.0	8.4	3.2	3.2	1.4	4.0	8.0	Q3
TPS799185DDCT	SOT-23-THIN	DDC	5	250	179.0	8.4	3.2	3.2	1.4	4.0	8.0	Q3
TPS799185YZUR	DSBGA	YZU	5	3000	180.0	8.4	1.07	1.42	0.74	4.0	8.0	Q1
TPS799185YZUT	DSBGA	YZU	5	250	180.0	8.4	1.07	1.42	0.74	4.0	8.0	Q1
TPS79918DDCR	SOT-23-THIN	DDC	5	3000	179.0	8.4	3.2	3.2	1.4	4.0	8.0	Q3
TPS79918DDCR1G4	SOT-23-THIN	DDC	5	3000	179.0	8.4	3.2	3.2	1.4	4.0	8.0	Q3
TPS79918DDCT	SOT-23-THIN	DDC	5	250	179.0	8.4	3.2	3.2	1.4	4.0	8.0	Q3
TPS79918YZUR	DSBGA	YZU	5	3000	180.0	8.4	1.07	1.42	0.74	4.0	8.0	Q1
TPS79918YZUT	DSBGA	YZU	5	250	180.0	8.4	1.07	1.42	0.74	4.0	8.0	Q1
TPS799195DRVR	WSON	DRV	6	3000	179.0	8.4	2.2	2.2	1.2	4.0	8.0	Q2
TPS799195DRVT	WSON	DRV	6	250	179.0	8.4	2.2	2.2	1.2	4.0	8.0	Q2
TPS799195YZUR	DSBGA	YZU	5	3000	180.0	8.4	1.07	1.42	0.74	4.0	8.0	Q1
TPS799195YZUT	DSBGA	YZU	5	250	180.0	8.4	1.07	1.42	0.74	4.0	8.0	Q1
TPS79919YZUT	DSBGA	YZU	5	250	180.0	8.4	1.07	1.42	0.74	4.0	8.0	Q1
TPS79920YZUT	DSBGA	YZU	5	250	180.0	8.4	1.07	1.42	0.74	4.0	8.0	Q1
TPS79921YZUR	DSBGA	YZU	5	3000	180.0	8.4	1.07	1.42	0.74	4.0	8.0	Q1
TPS79925DDCR	SOT-23-THIN	DDC	5	3000	179.0	8.4	3.2	3.2	1.4	4.0	8.0	Q3
TPS79925DDCRG4	SOT-23-THIN	DDC	5	3000	179.0	8.4	3.2	3.2	1.4	4.0	8.0	Q3

Device	Package Type	Package Drawing	Pins	SPQ	Reel Diameter (mm)	Reel Width W1 (mm)	A0 (mm)	B0 (mm)	K0 (mm)	P1 (mm)	W (mm)	Pin1 Quadrant
TPS79925DDCT	SOT-23-THIN	DDC	5	250	179.0	8.4	3.2	3.2	1.4	4.0	8.0	Q3
TPS79925YZUR	DSBGA	YZU	5	3000	180.0	8.4	1.07	1.42	0.74	4.0	8.0	Q1
TPS79925YZUT	DSBGA	YZU	5	250	180.0	8.4	1.07	1.42	0.74	4.0	8.0	Q1
TPS79926YZUR	DSBGA	YZU	5	3000	180.0	8.4	1.07	1.42	0.74	4.0	8.0	Q1
TPS79926YZUT	DSBGA	YZU	5	250	180.0	8.4	1.07	1.42	0.74	4.0	8.0	Q1
TPS79927DDCR	SOT-23-THIN	DDC	5	3000	179.0	8.4	3.2	3.2	1.4	4.0	8.0	Q3
TPS79927DDCT	SOT-23-THIN	DDC	5	250	179.0	8.4	3.2	3.2	1.4	4.0	8.0	Q3
TPS79927DRVT	WSON	DRV	6	250	179.0	8.4	2.2	2.2	1.2	4.0	8.0	Q2
TPS79927YZUT	DSBGA	YZU	5	250	180.0	8.4	1.07	1.42	0.74	4.0	8.0	Q1
TPS799285DDCR	SOT-23-THIN	DDC	5	3000	179.0	8.4	3.2	3.2	1.4	4.0	8.0	Q3
TPS799285DDCT	SOT-23-THIN	DDC	5	250	179.0	8.4	3.2	3.2	1.4	4.0	8.0	Q3
TPS799285DRVR	WSON	DRV	6	3000	179.0	8.4	2.2	2.2	1.2	4.0	8.0	Q2
TPS799285DRVT	WSON	DRV	6	250	179.0	8.4	2.2	2.2	1.2	4.0	8.0	Q2
TPS79928DDCR	SOT-23-THIN	DDC	5	3000	179.0	8.4	3.2	3.2	1.4	4.0	8.0	Q3
TPS79928DDCT	SOT-23-THIN	DDC	5	250	179.0	8.4	3.2	3.2	1.4	4.0	8.0	Q3
TPS79928YZUR	DSBGA	YZU	5	3000	180.0	8.4	1.07	1.42	0.74	4.0	8.0	Q1
TPS79928YZUT	DSBGA	YZU	5	250	180.0	8.4	1.07	1.42	0.74	4.0	8.0	Q1
TPS79930DDCR	SOT-23-THIN	DDC	5	3000	179.0	8.4	3.2	3.2	1.4	4.0	8.0	Q3
TPS79930DDCR	SOT-23-THIN	DDC	5	3000	180.0	8.4	3.1	3.05	1.1	4.0	8.0	Q3
TPS79930DDCR1G4	SOT-23-THIN	DDC	5	3000	180.0	8.4	3.1	3.05	1.1	4.0	8.0	Q3
TPS79930DDCT	SOT-23-THIN	DDC	5	250	179.0	8.4	3.2	3.2	1.4	4.0	8.0	Q3
TPS79930YZUR	DSBGA	YZU	5	3000	180.0	8.4	1.07	1.42	0.74	4.0	8.0	Q1
TPS79930YZUT	DSBGA	YZU	5	250	180.0	8.4	1.07	1.42	0.74	4.0	8.0	Q1
TPS799315DDCR	SOT-23-THIN	DDC	5	3000	179.0	8.4	3.2	3.2	1.4	4.0	8.0	Q3
TPS799315DDCRG4	SOT-23-THIN	DDC	5	3000	179.0	8.4	3.2	3.2	1.4	4.0	8.0	Q3
TPS799315DDCT	SOT-23-THIN	DDC	5	250	179.0	8.4	3.2	3.2	1.4	4.0	8.0	Q3
TPS799315YZUR	DSBGA	YZU	5	3000	180.0	8.4	1.07	1.42	0.74	4.0	8.0	Q1
TPS799315YZUT	DSBGA	YZU	5	250	180.0	8.4	1.07	1.42	0.74	4.0	8.0	Q1
TPS79932YZUR	DSBGA	YZU	5	3000	180.0	8.4	1.07	1.42	0.74	4.0	8.0	Q1
TPS79933DDCR	SOT-23-THIN	DDC	5	3000	179.0	8.4	3.2	3.2	1.4	4.0	8.0	Q3

Device	Package Type	Package Drawing	Pins	SPQ	Reel Diameter (mm)	Reel Width W1 (mm)	A0 (mm)	B0 (mm)	K0 (mm)	P1 (mm)	W (mm)	Pin1 Quadrant
TPS79933DDCR	SOT-23-THIN	DDC	5	3000	180.0	8.4	3.1	3.05	1.1	4.0	8.0	Q3
TPS79933DDCR1G4	SOT-23-THIN	DDC	5	3000	180.0	8.4	3.1	3.05	1.1	4.0	8.0	Q3
TPS79933DDCT	SOT-23-THIN	DDC	5	250	180.0	8.4	3.1	3.05	1.1	4.0	8.0	Q3
TPS79933DDCT	SOT-23-THIN	DDC	5	250	179.0	8.4	3.2	3.2	1.4	4.0	8.0	Q3
TPS79933DRVT	WSON	DRV	6	250	179.0	8.4	2.2	2.2	1.2	4.0	8.0	Q2
TPS79933YZUR	DSBGA	YZU	5	3000	180.0	8.4	1.07	1.42	0.74	4.0	8.0	Q1
TPS79933YZUT	DSBGA	YZU	5	250	180.0	8.4	1.07	1.42	0.74	4.0	8.0	Q1
TPS79942DDCR	SOT-23-THIN	DDC	5	3000	179.0	8.4	3.2	3.2	1.4	4.0	8.0	Q3
TPS79942DDCR1G4	SOT-23-THIN	DDC	5	3000	179.0	8.4	3.2	3.2	1.4	4.0	8.0	Q3
TPS79942DDCT	SOT-23-THIN	DDC	5	250	179.0	8.4	3.2	3.2	1.4	4.0	8.0	Q3
TPS79945YZUR	DSBGA	YZU	5	3000	180.0	8.4	1.07	1.42	0.74	4.0	8.0	Q1
TPS79945YZUT	DSBGA	YZU	5	250	180.0	8.4	1.07	1.42	0.74	4.0	8.0	Q1

TAPE AND REEL BOX DIMENSIONS

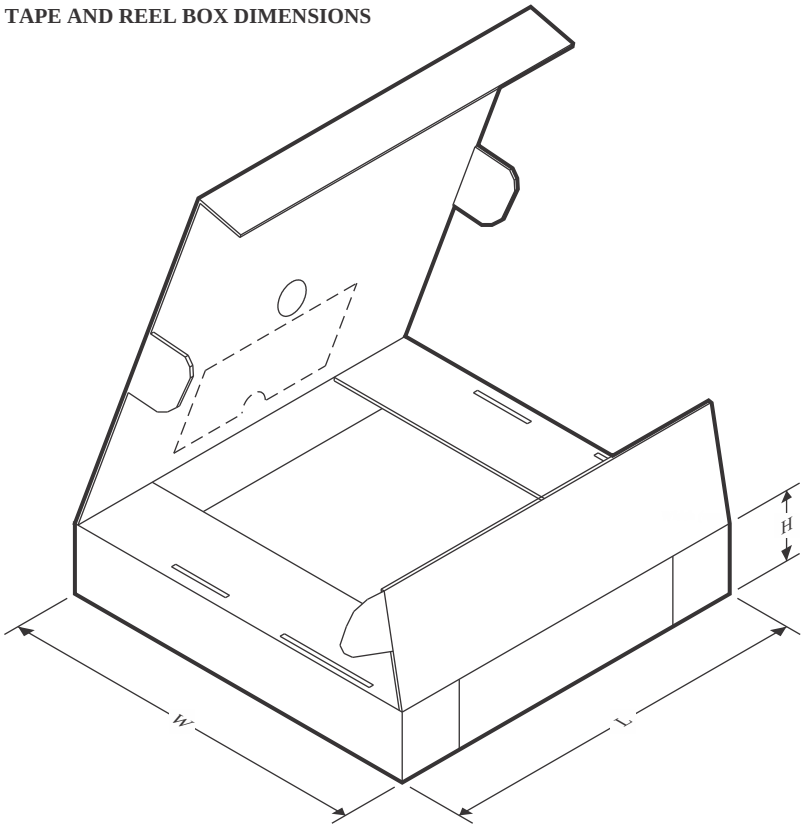

*All dimensions are nominal

Device	Package Type	Package Drawing	Pins	SPQ	Length (mm)	Width (mm)	Height (mm)
TPS79901DDCR	SOT-23-THIN	DDC	5	3000	200.0	183.0	25.0
TPS79901DDCR	SOT-23-THIN	DDC	5	3000	183.0	183.0	20.0
TPS79901DDCR1G4	SOT-23-THIN	DDC	5	3000	183.0	183.0	20.0
TPS79901DDCT	SOT-23-THIN	DDC	5	250	183.0	183.0	20.0
TPS79901DDCT	SOT-23-THIN	DDC	5	250	200.0	183.0	25.0
TPS79901DRVT	WSON	DRV	6	250	200.0	183.0	25.0
TPS79901YZUR	DSBGA	YZU	5	3000	182.0	182.0	20.0
TPS79901YZUT	DSBGA	YZU	5	250	182.0	182.0	20.0
TPS799125YZUR	DSBGA	YZU	5	3000	182.0	182.0	20.0
TPS799125YZUT	DSBGA	YZU	5	250	182.0	182.0	20.0
TPS79912DDCR	SOT-23-THIN	DDC	5	3000	200.0	183.0	25.0
TPS79912DDCT	SOT-23-THIN	DDC	5	250	200.0	183.0	25.0
TPS79912DRVT	WSON	DRV	6	250	200.0	183.0	25.0
TPS79912YZUR	DSBGA	YZU	5	3000	182.0	182.0	20.0
TPS79912YZUT	DSBGA	YZU	5	250	182.0	182.0	20.0
TPS79913DDCR	SOT-23-THIN	DDC	5	3000	200.0	183.0	25.0
TPS79913DDCT	SOT-23-THIN	DDC	5	250	200.0	183.0	25.0
TPS79913YZUR	DSBGA	YZU	5	3000	182.0	182.0	20.0

Device	Package Type	Package Drawing	Pins	SPQ	Length (mm)	Width (mm)	Height (mm)
TPS79915DDCR	SOT-23-THIN	DDC	5	3000	200.0	183.0	25.0
TPS79915DDCRG4	SOT-23-THIN	DDC	5	3000	200.0	183.0	25.0
TPS79915DDCT	SOT-23-THIN	DDC	5	250	200.0	183.0	25.0
TPS79915YZUR	DSBGA	YZU	5	3000	182.0	182.0	20.0
TPS79915YZUT	DSBGA	YZU	5	250	182.0	182.0	20.0
TPS799185DDCR	SOT-23-THIN	DDC	5	3000	200.0	183.0	25.0
TPS799185DDCRG4	SOT-23-THIN	DDC	5	3000	200.0	183.0	25.0
TPS799185DDCT	SOT-23-THIN	DDC	5	250	200.0	183.0	25.0
TPS799185YZUR	DSBGA	YZU	5	3000	182.0	182.0	20.0
TPS799185YZUT	DSBGA	YZU	5	250	182.0	182.0	20.0
TPS79918DDCR	SOT-23-THIN	DDC	5	3000	200.0	183.0	25.0
TPS79918DDCR1G4	SOT-23-THIN	DDC	5	3000	200.0	183.0	25.0
TPS79918DDCT	SOT-23-THIN	DDC	5	250	200.0	183.0	25.0
TPS79918YZUR	DSBGA	YZU	5	3000	182.0	182.0	20.0
TPS79918YZUT	DSBGA	YZU	5	250	182.0	182.0	20.0
TPS799195DRVR	WSON	DRV	6	3000	203.0	203.0	35.0
TPS799195DRVT	WSON	DRV	6	250	203.0	203.0	35.0
TPS799195YZUR	DSBGA	YZU	5	3000	182.0	182.0	20.0
TPS799195YZUT	DSBGA	YZU	5	250	182.0	182.0	20.0
TPS79919YZUT	DSBGA	YZU	5	250	182.0	182.0	20.0
TPS79920YZUT	DSBGA	YZU	5	250	182.0	182.0	20.0
TPS79921YZUR	DSBGA	YZU	5	3000	182.0	182.0	20.0
TPS79925DDCR	SOT-23-THIN	DDC	5	3000	200.0	183.0	25.0
TPS79925DDCRG4	SOT-23-THIN	DDC	5	3000	200.0	183.0	25.0
TPS79925DDCT	SOT-23-THIN	DDC	5	250	200.0	183.0	25.0
TPS79925YZUR	DSBGA	YZU	5	3000	182.0	182.0	20.0
TPS79925YZUT	DSBGA	YZU	5	250	182.0	182.0	20.0
TPS79926YZUR	DSBGA	YZU	5	3000	182.0	182.0	20.0
TPS79926YZUT	DSBGA	YZU	5	250	182.0	182.0	20.0
TPS79927DDCR	SOT-23-THIN	DDC	5	3000	200.0	183.0	25.0
TPS79927DDCT	SOT-23-THIN	DDC	5	250	200.0	183.0	25.0
TPS79927DRVT	WSON	DRV	6	250	203.0	203.0	35.0
TPS79927YZUT	DSBGA	YZU	5	250	182.0	182.0	20.0
TPS799285DDCR	SOT-23-THIN	DDC	5	3000	200.0	183.0	25.0
TPS799285DDCT	SOT-23-THIN	DDC	5	250	200.0	183.0	25.0
TPS799285DRVR	WSON	DRV	6	3000	200.0	183.0	25.0
TPS799285DRVT	WSON	DRV	6	250	200.0	183.0	25.0
TPS79928DDCR	SOT-23-THIN	DDC	5	3000	200.0	183.0	25.0
TPS79928DDCT	SOT-23-THIN	DDC	5	250	200.0	183.0	25.0
TPS79928YZUR	DSBGA	YZU	5	3000	182.0	182.0	20.0
TPS79928YZUT	DSBGA	YZU	5	250	182.0	182.0	20.0
TPS79930DDCR	SOT-23-THIN	DDC	5	3000	200.0	183.0	25.0
TPS79930DDCR	SOT-23-THIN	DDC	5	3000	183.0	183.0	20.0

Device	Package Type	Package Drawing	Pins	SPQ	Length (mm)	Width (mm)	Height (mm)
TPS79930DDCR1G4	SOT-23-THIN	DDC	5	3000	183.0	183.0	20.0
TPS79930DDCT	SOT-23-THIN	DDC	5	250	200.0	183.0	25.0
TPS79930YZUR	DSBGA	YZU	5	3000	182.0	182.0	20.0
TPS79930YZUT	DSBGA	YZU	5	250	182.0	182.0	20.0
TPS799315DDCR	SOT-23-THIN	DDC	5	3000	200.0	183.0	25.0
TPS799315DDCRG4	SOT-23-THIN	DDC	5	3000	200.0	183.0	25.0
TPS799315DDCT	SOT-23-THIN	DDC	5	250	200.0	183.0	25.0
TPS799315YZUR	DSBGA	YZU	5	3000	182.0	182.0	20.0
TPS799315YZUT	DSBGA	YZU	5	250	182.0	182.0	20.0
TPS79932YZUR	DSBGA	YZU	5	3000	182.0	182.0	20.0
TPS79933DDCR	SOT-23-THIN	DDC	5	3000	200.0	183.0	25.0
TPS79933DDCR	SOT-23-THIN	DDC	5	3000	183.0	183.0	20.0
TPS79933DDCR1G4	SOT-23-THIN	DDC	5	3000	183.0	183.0	20.0
TPS79933DDCT	SOT-23-THIN	DDC	5	250	183.0	183.0	20.0
TPS79933DDCT	SOT-23-THIN	DDC	5	250	200.0	183.0	25.0
TPS79933DRVT	WSON	DRV	6	250	200.0	183.0	25.0
TPS79933YZUR	DSBGA	YZU	5	3000	182.0	182.0	20.0
TPS79933YZUT	DSBGA	YZU	5	250	182.0	182.0	20.0
TPS79942DDCR	SOT-23-THIN	DDC	5	3000	200.0	183.0	25.0
TPS79942DDCR1G4	SOT-23-THIN	DDC	5	3000	200.0	183.0	25.0
TPS79942DDCT	SOT-23-THIN	DDC	5	250	200.0	183.0	25.0
TPS79945YZUR	DSBGA	YZU	5	3000	182.0	182.0	20.0
TPS79945YZUT	DSBGA	YZU	5	250	182.0	182.0	20.0

DRV 6 WSON - 0.8 mm max height

PLASTIC SMALL OUTLINE - NO LEAD

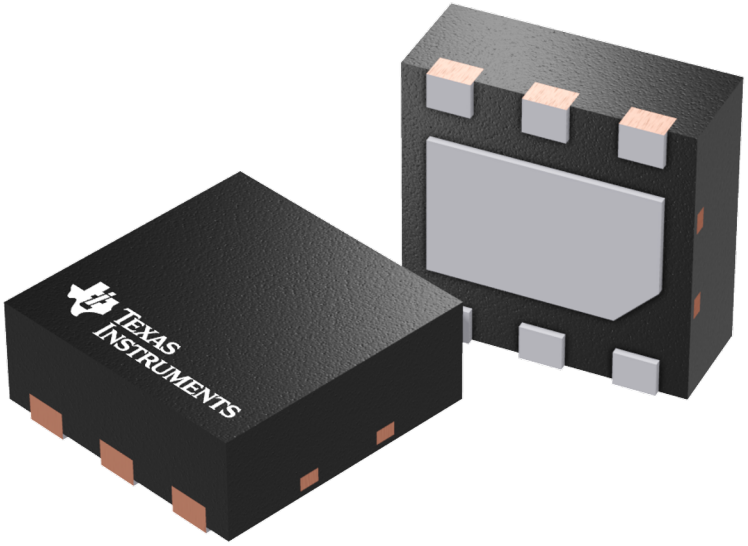

Images above are just a representation of the package family, actual package may vary.
Refer to the product data sheet for package details.

TEXAS INSTRUMENTS

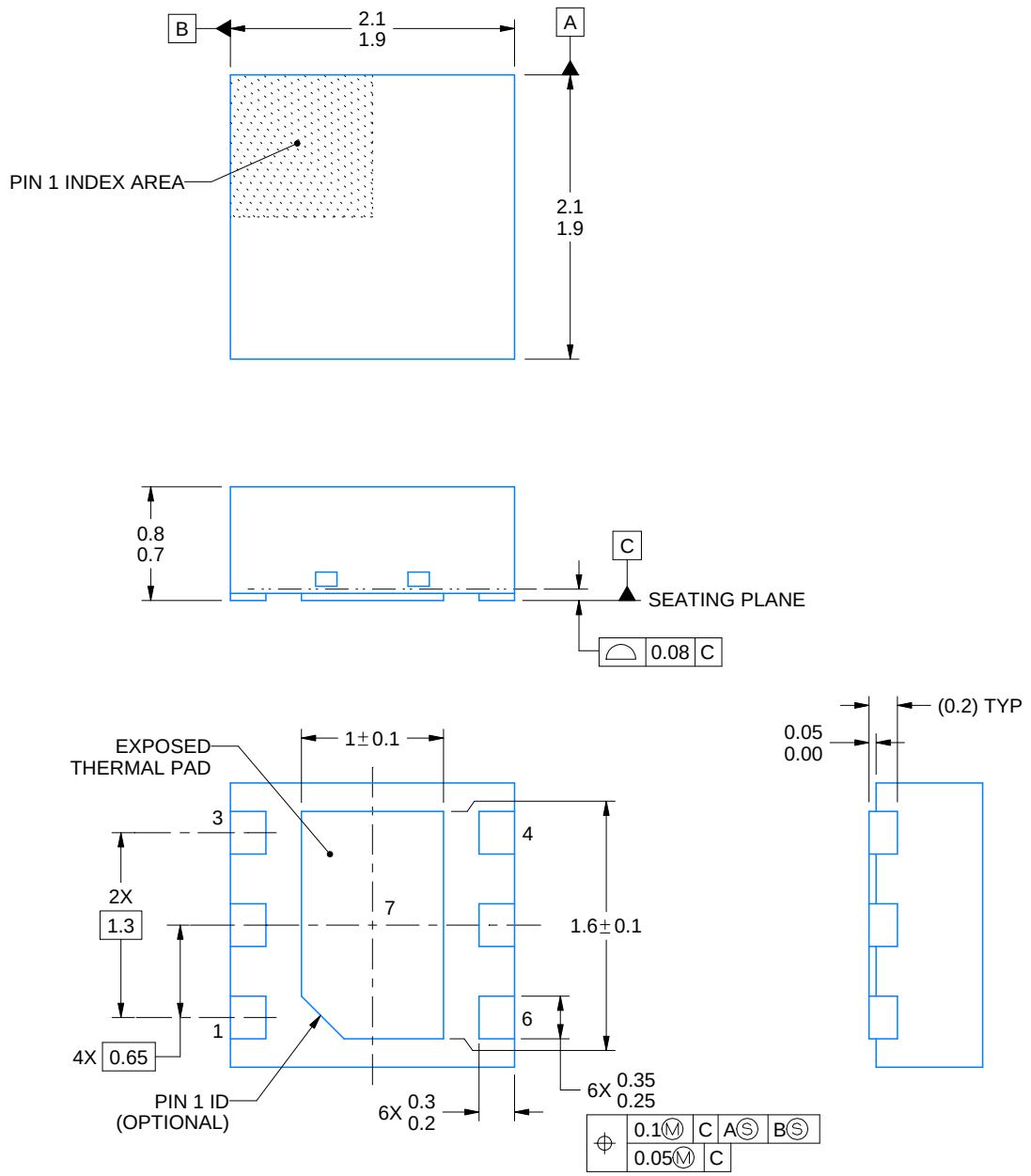

NOTES:

1. All linear dimensions are in millimeters. Any dimensions in parenthesis are for reference only. Dimensioning and tolerancing per ASME Y14.5M.
2. This drawing is subject to change without notice.
3. The package thermal pad must be soldered to the printed circuit board for thermal and mechanical performance.

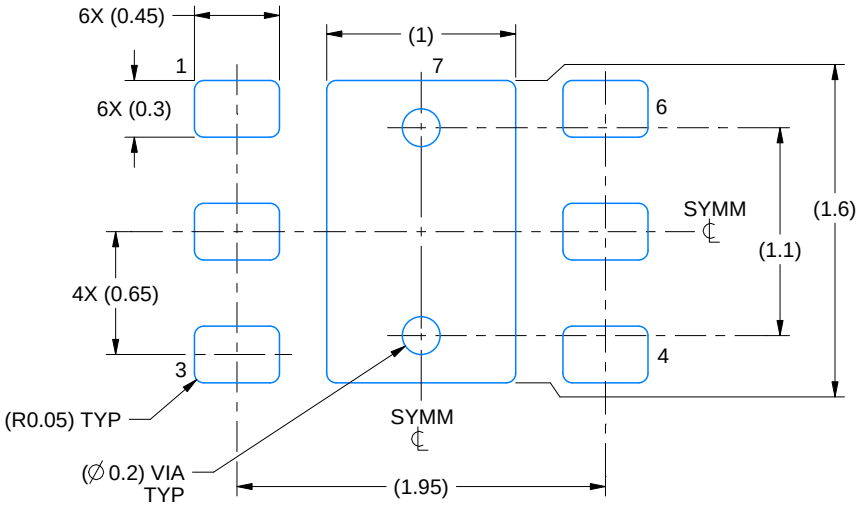

LAND PATTERN EXAMPLE
SCALE:25X

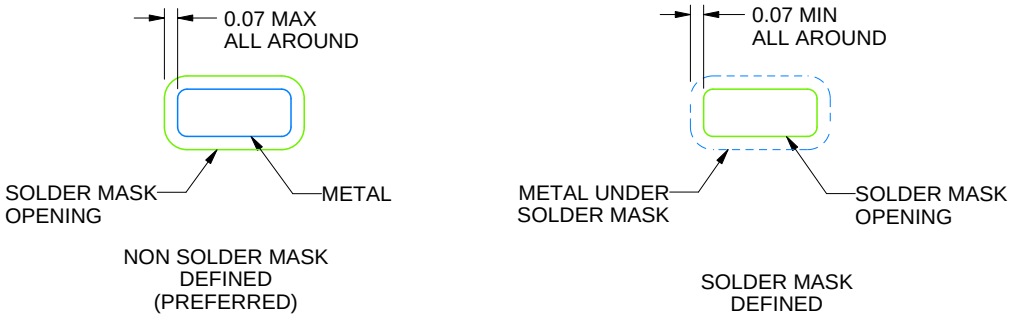

SOLDER MASK DETAILS

4222173/B 04/2018

NOTES: (continued)

4. This package is designed to be soldered to a thermal pad on the board. For more information, see Texas Instruments literature number SLUA271 (www.ti.com/lit/slua271).
5. Vias are optional depending on application, refer to device data sheet. If some or all are implemented, recommended via locations are shown.

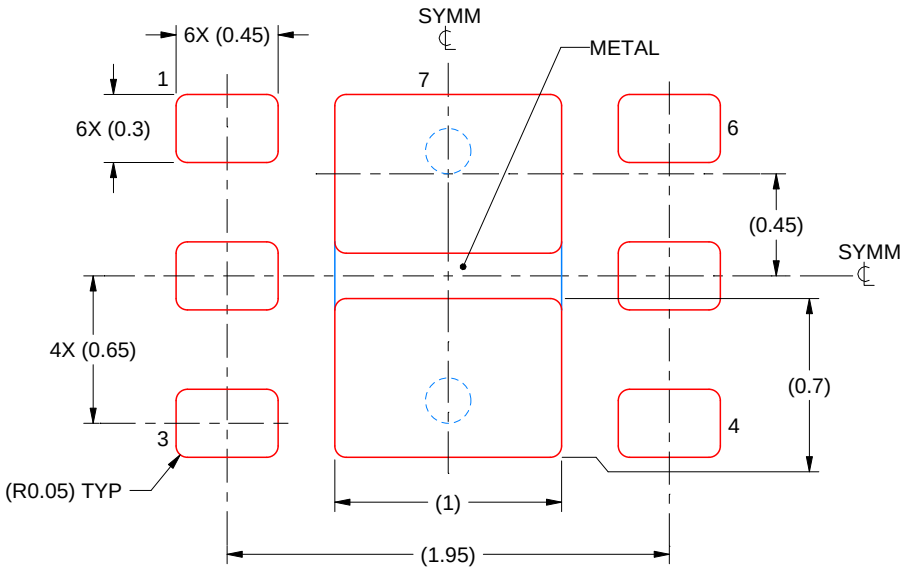

SOLDER PASTE EXAMPLE
BASED ON 0.125 mm THICK STENCIL

EXPOSED PAD #7
88% PRINTED SOLDER COVERAGE BY AREA UNDER PACKAGE
SCALE:30X

4222173/B 04/2018

NOTES: (continued)

6. Laser cutting apertures with trapezoidal walls and rounded corners may offer better paste release. IPC-7525 may have alternate design recommendations.

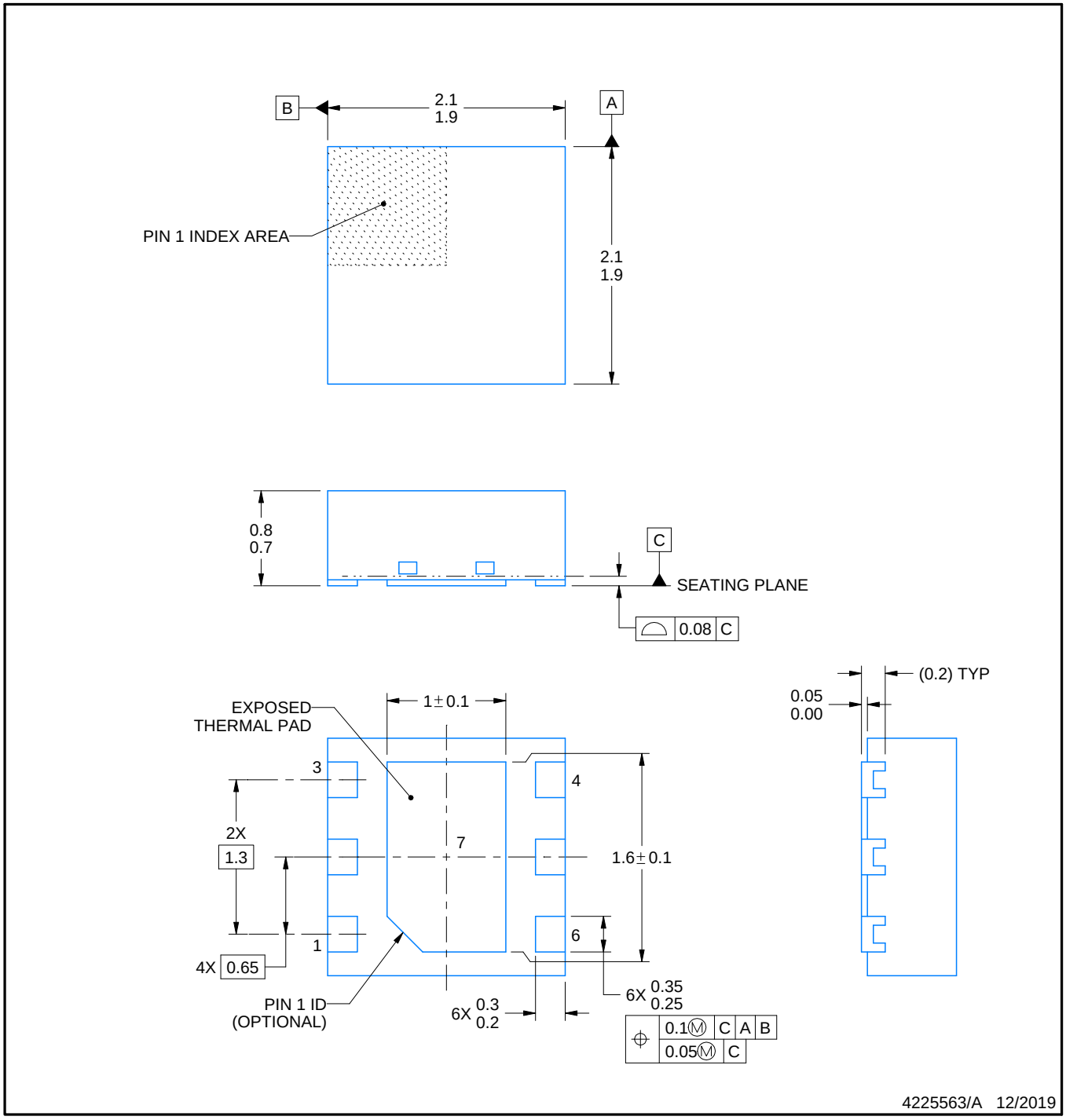

NOTES:

1. All linear dimensions are in millimeters. Any dimensions in parenthesis are for reference only. Dimensioning and tolerancing per ASME Y14.5M.
2. This drawing is subject to change without notice.
3. The package thermal pad must be soldered to the printed circuit board for thermal and mechanical performance.

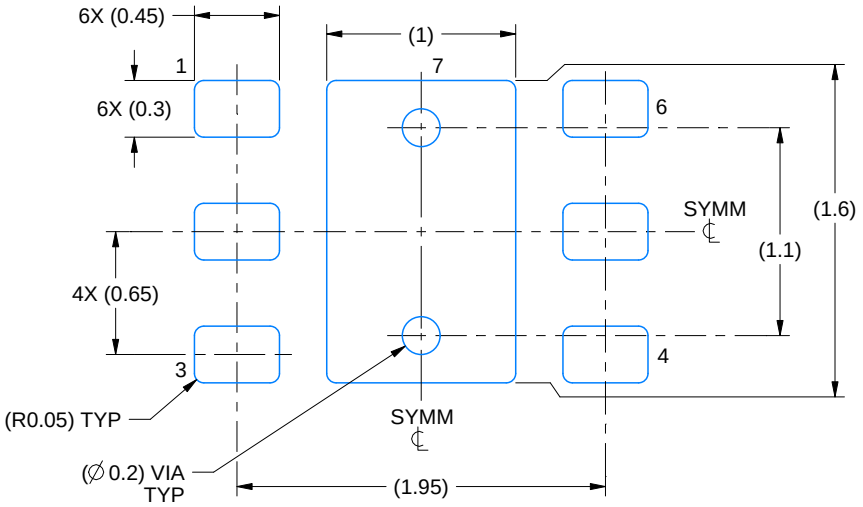

LAND PATTERN EXAMPLE
EXPOSED METAL SHOWN
SCALE:25X

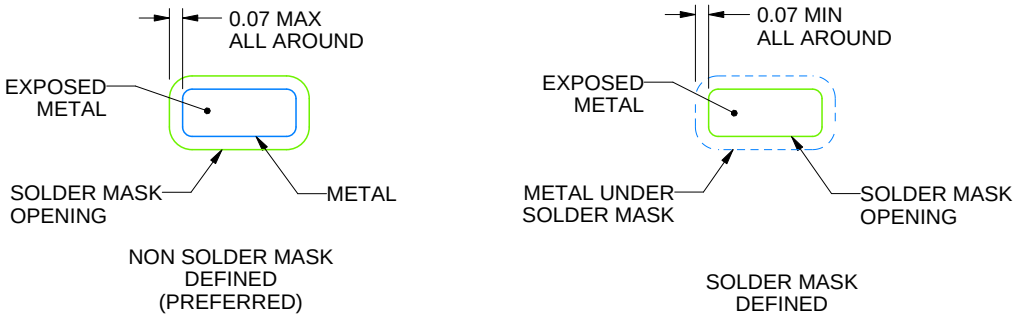

SOLDER MASK DETAILS

4225563/A 12/2019

NOTES: (continued)

4. This package is designed to be soldered to a thermal pad on the board. For more information, see Texas Instruments literature number SLUA271 (www.ti.com/lit/slua271).
5. Vias are optional depending on application, refer to device data sheet. If some or all are implemented, recommended via locations are shown.

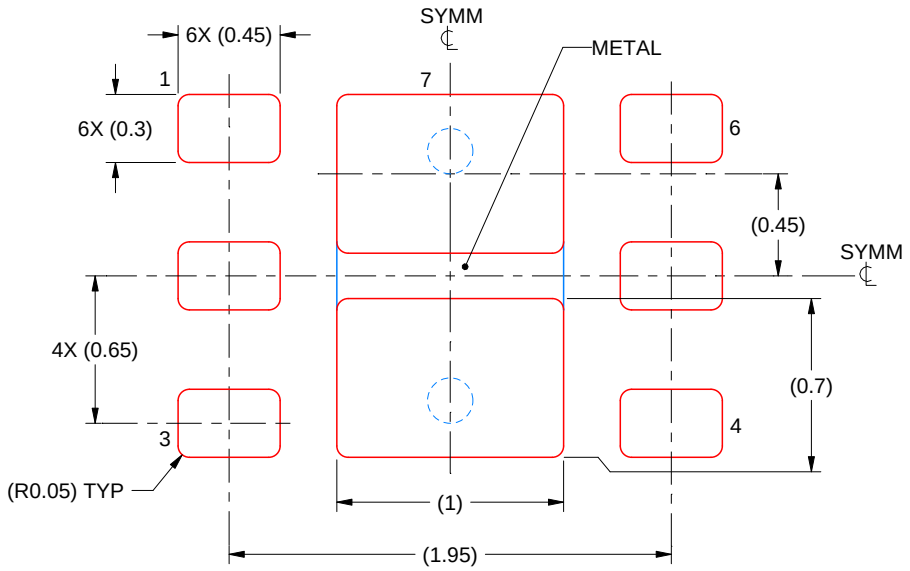

SOLDER PASTE EXAMPLE
BASED ON 0.125 mm THICK STENCIL

EXPOSED PAD #7
88% PRINTED SOLDER COVERAGE BY AREA UNDER PACKAGE
SCALE:30X

4225563/A 12/2019

NOTES: (continued)

6. Laser cutting apertures with trapezoidal walls and rounded corners may offer better paste release. IPC-7525 may have alternate design recommendations.

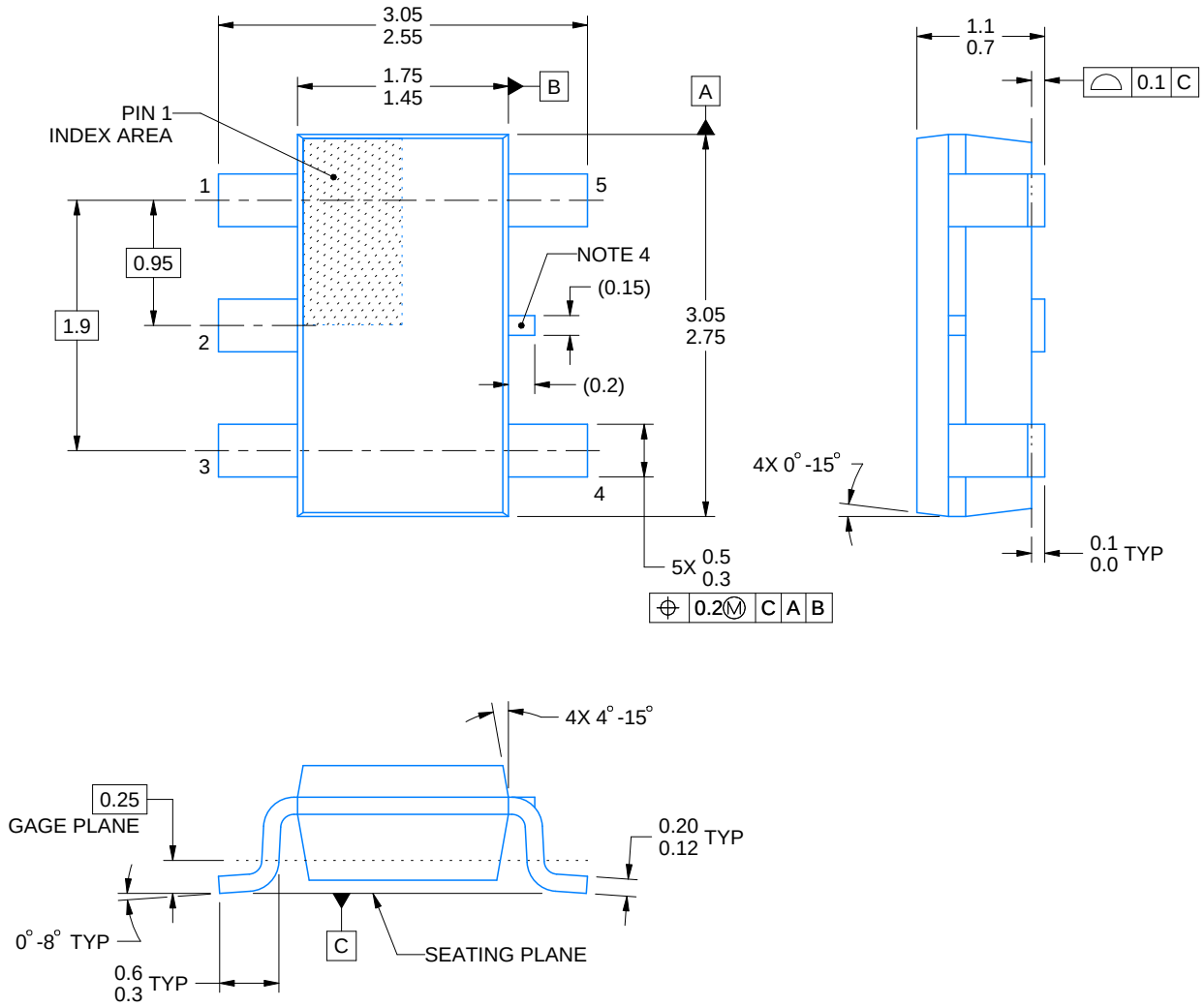

4220752/C 08/2024

NOTES:

1. All linear dimensions are in millimeters. Any dimensions in parenthesis are for reference only. Dimensioning and tolerancing per ASME Y14.5M.
2. This drawing is subject to change without notice.
3. Reference JEDEC MO-193.
4. Support pin may differ or may not be present.

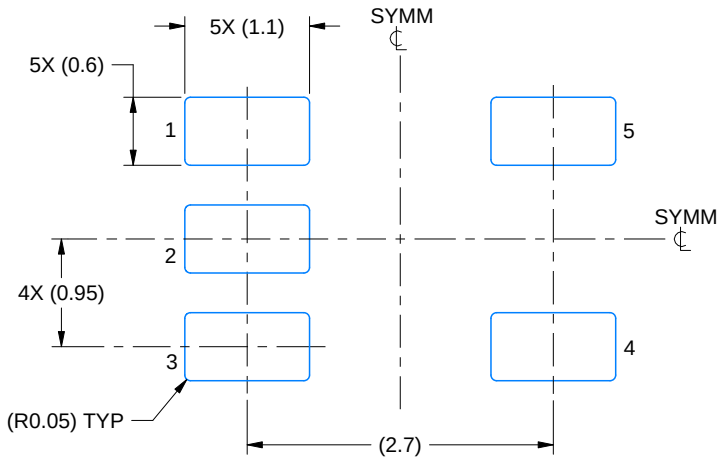

LAND PATTERN EXAMPLE
EXPLOSED METAL SHOWN
SCALE:15X

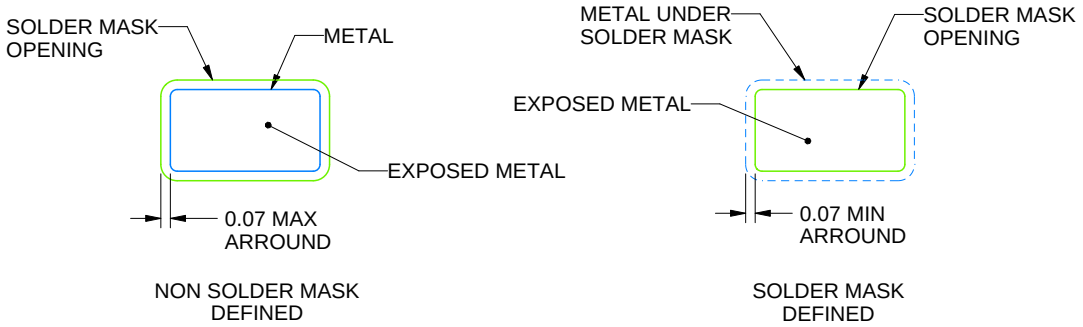

SOLDERMASK DETAILS

4220752/C 08/2024

NOTES: (continued)

4. Publication IPC-7351 may have alternate designs.
5. Solder mask tolerances between and around signal pads can vary based on board fabrication site.

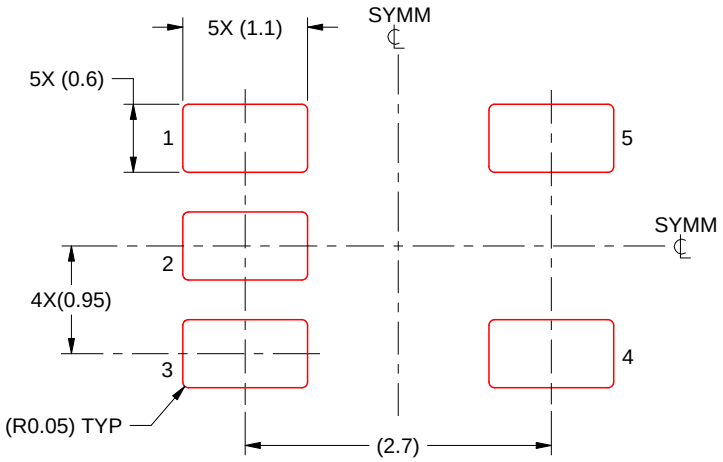

SOLDER PASTE EXAMPLE
BASED ON 0.125 THICK STENCIL
SCALE:15X

4220752/C 08/2024

NOTES: (continued)

6. Laser cutting apertures with trapezoidal walls and rounded corners may offer better paste release. IPC-7525 may have alternate design recommendations.
7. Board assembly site may have different recommendations for stencil design.

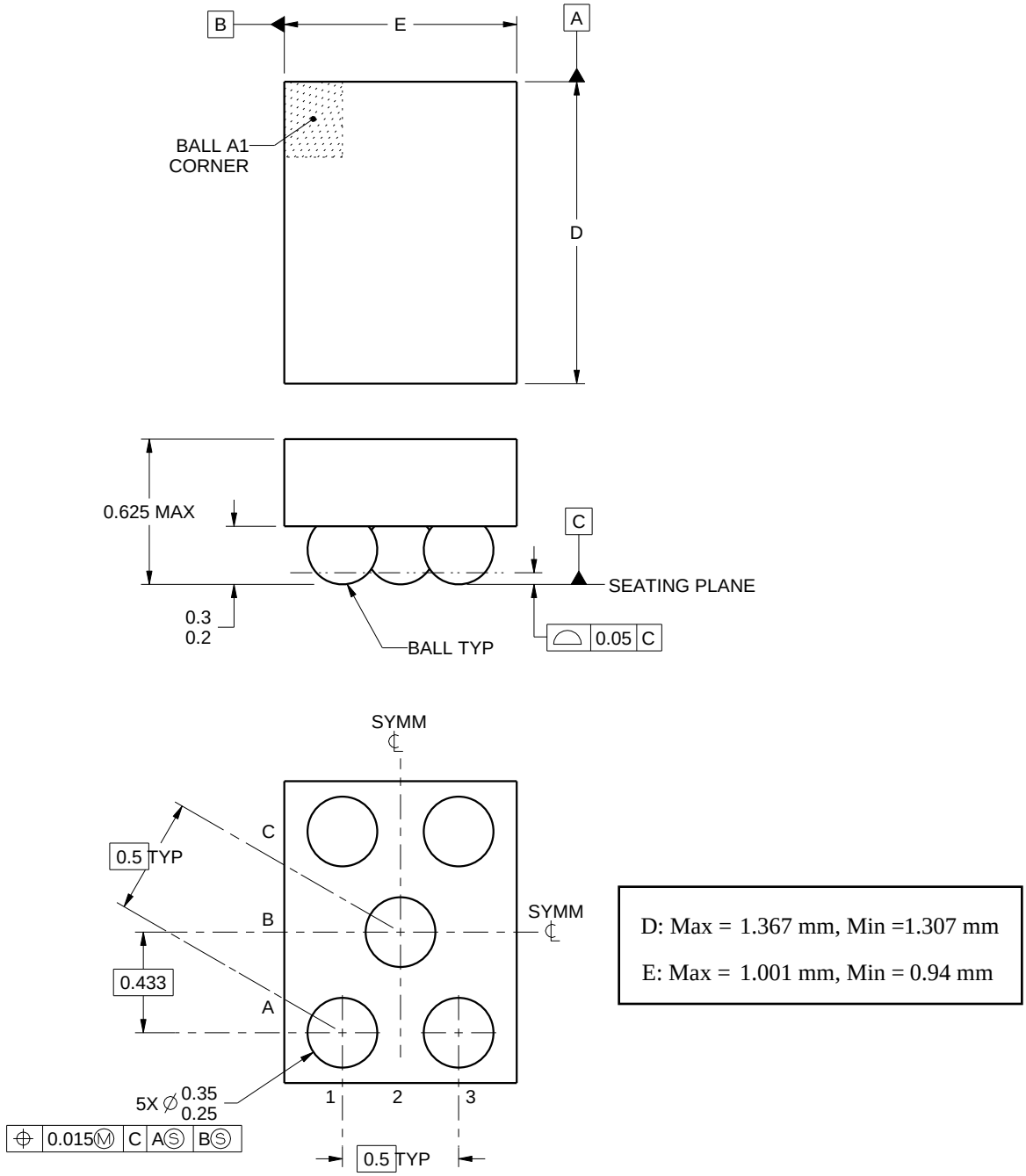

NOTES:

1. All linear dimensions are in millimeters. Any dimensions in parenthesis are for reference only. Dimensioning and tolerancing per ASME Y14.5M.
2. This drawing is subject to change without notice.

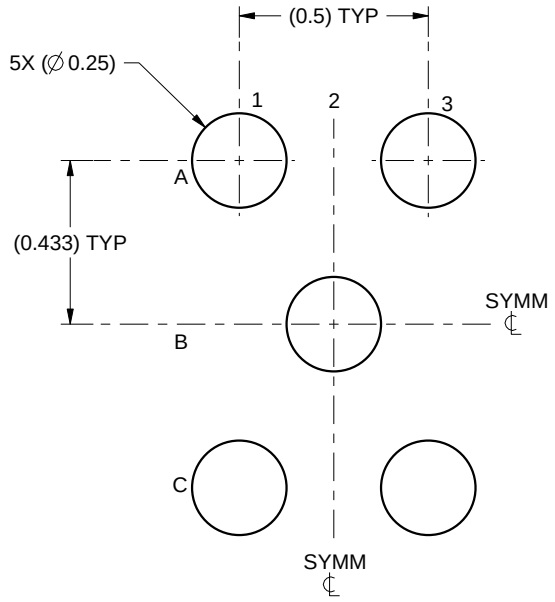

LAND PATTERN EXAMPLE
SCALE:50X

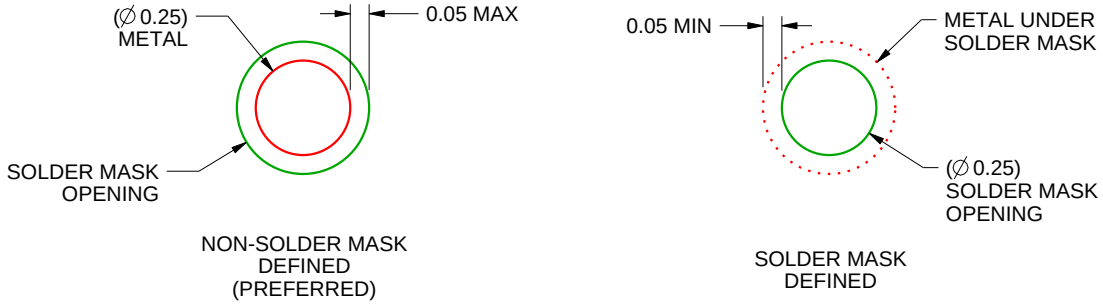

SOLDER MASK DETAILS
NOT TO SCALE

4222196/A 11/2015

NOTES: (continued)

3. Final dimensions may vary due to manufacturing tolerance considerations and also routing constraints.
   Refer to Texas Instruments Literature No. SNVA009 (www.ti.com/lit/snva009).

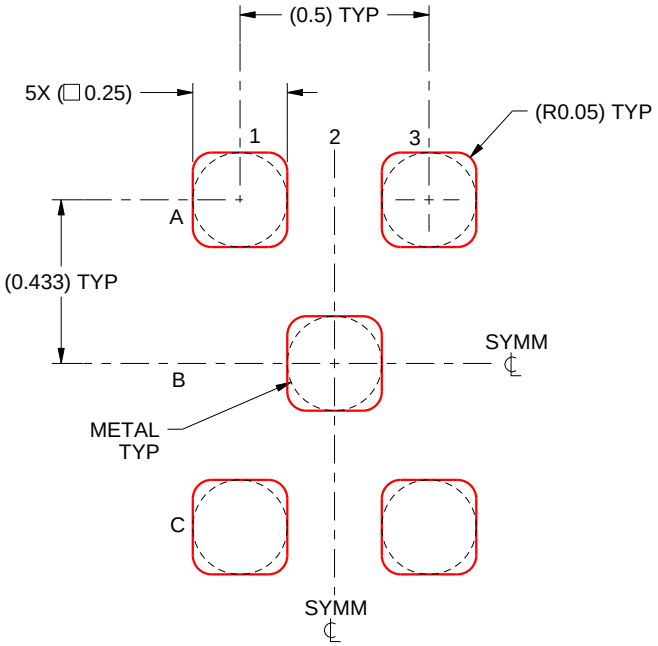

SOLDER PASTE EXAMPLE
BASED ON 0.1 mm THICK STENCIL
SCALE:50X

4222196/A 11/2015

NOTES: (continued)

4. Laser cutting apertures with trapezoidal walls and rounded corners may offer better paste release.

重要なお知らせと免責事項

テキサス· インスツルメンツは、技術データと信頼性データ (データシートを含みます)、設計リソース (リファレンス デザインを含みます)、アプリケーションや設計に関する各種アドバイス、Web ツール、安全性情報、その他のリソースを、欠陥が存在する可能性のある「現状のまま」提供しており、商品性および特定目的に対する適合性の黙示保証、第三者の知的財産権の非侵害保証を含むいかなる保証も、明示的または黙示的にかかわらず拒否します。

これらのリソースは、 テキサス· インスツルメンツ製品を使用する設計の経験を積んだ開発者への提供を意図したものです。(1) お客様のアプリケーションに適した テキサス· インスツルメンツ製品の選定、(2) お客様のアプリケーションの設計、検証、試験、(3) お客様のアプリケーションに該当する各種規格や、その他のあらゆる安全性、セキュリティ、規制、または他の要件への確実な適合に関する責任を、お客様のみが単独で負うものとします。

上記の各種リソースは、予告なく変更される可能性があります。これらのリソースは、リソースで説明されている テキサス· インスツルメンツ製品を使用するアプリケーションの開発の目的でのみ、 テキサス· インスツルメンツはその使用をお客様に許諾します。これらのリソースに関して、他の目的で複製することや掲載することは禁止されています。 テキサス· インスツルメンツや第三者の知的財産権のライセンスが付与されている訳ではありません。お客様は、これらのリソースを自身で使用した結果発生するあらゆる申し立て、損害、費用、損失、責任について、 テキサス· インスツルメンツおよびその代理人を完全に補償するものとし、 テキサス· インスツルメンツは一切の責任を拒否します。

テキサス· インスツルメンツの製品は、 テキサス· インスツルメンツの販売条件、または ti.com やかかる テキサス· インスツルメンツ製品の関連資料などのいずれかを通じて提供する適用可能な条項の下で提供されています。 テキサス· インスツルメンツがこれらのリソースを提供することは、適用される テキサス· インスツルメンツの保証または他の保証の放棄の拡大や変更を意味するものではありません。

お客様がいかなる追加条項または代替条項を提案した場合でも、 テキサス· インスツルメンツはそれらに異議を唱え、拒否します。

郵送先住所：Texas Instruments, Post Office Box 655303, Dallas, Texas 75265
Copyright © 2025, Texas Instruments Incorporated