TPS61093 低入力、昇圧コンバータ、パワー・ダイオードおよび入出力絶縁内蔵

1 特長

- 入力電圧範囲：1.6V～6V
- パワー・ダイオードと絶縁 FET を搭載
- 電流 1.1A の 20V 内部スイッチ FET
- 1.2MHz 固定のスイッチング周波数
- 15V 出力で最大 88% の効率
- 過負荷および過電圧保護
- ソフト・スタートアップをプログラム可能
- IC シャットダウン後の負荷放電パス
- 2.5mm × 2.5mm × 0.8mm の WSON パッケージ
- WEBENCH® Power Designer により、TPS61093 を使用するカスタム設計を作成

2 アプリケーション

- 血糖値計
- OLED 電源
- 3.3V から 12V、5V から 12V の昇圧コンバータ

3 概要

TPS61093 は、高集積および高信頼性向けに設計された 1.2MHz 固定周波数の昇圧コンバータです。このICには、20Vのパワー・スイッチ、入出力絶縁スイッチ、およびパワー・ダイオードが内蔵されています。出力電流が過負荷制限を超えると、IC の絶縁スイッチが開き、出力を入力から切り離して IC と入力電源を保護します。また、この絶縁スイッチはシャットダウン中も出力を入力から切り離し、リーク電流を最小限に抑えます。ICがシャットダウンされると、内部のダイオードにより、出力コンデンサが低い電圧レベルまで放電されます。その他の保護機能として、各サイクルでの 1.1A のピーク過電流保護 (OCP)、出力過電圧保護 (OVP)、サーマル・シャットダウン、低電圧誤動作防止 (UVLO) を備えています。

最小入力電圧は1.6Vであり、2個のアルカリ電池、1個のリチウム・イオン電池、または3.3V/5Vのレギュレーション電源から給電が可能です。出力は最大 17V まで昇圧できます。TPS61093 はサーマル・パッド付きの 2.5mm × 2.5mm VSON パッケージで供給されます。

製品情報(1)

型番	パッケージ	本体サイズ(公称)
TPS61093	WSON (10)	2.50mm×2.50mm

(1) 利用可能なすべてのパッケージについては、このデータシートの末尾にある注文情報を参照してください。

概略回路図

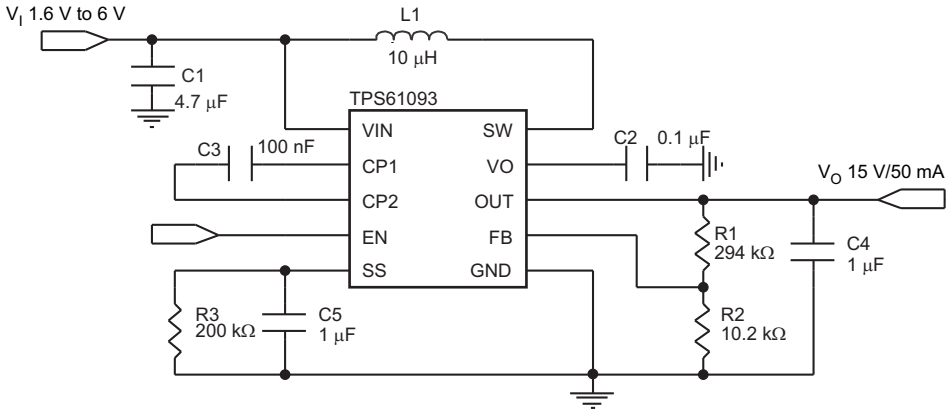

英語版のTI製品についての情報を翻訳したこの資料は、製品の概要を確認する目的で便宜的に提供しているものです。該当する正式な英語版の最新情報は、www.ti.comで閲覧でき、その内容が常に優先されます。TIでは翻訳の正確性および妥当性につきましては一切保証いたしません。実際の設計などの前には、必ず最新版の英語版をご参照くださいますようお願いいたします。

目次

1 特長 ... 1
2 アプリケーション ... 1
3 概要 ... 1
4 改訂履歴 ... 2
5 **Pin Configuration and Functions** ... 3
6 **Specifications** ... 3
6.1 Absolute Maximum Ratings ... 3
6.2 ESD Ratings ... 4
6.3 Recommended Operating Conditions ... 4
6.4 Thermal Information ... 4
6.5 Electrical Characteristics ... 5
6.6 Typical Characteristics ... 5
7 **Detailed Description** ... 7
7.1 Overview ... 7
7.2 Functional Block Diagram ... 7
7.3 Feature Description ... 8
7.4 Device Functional Modes ... 8
8 **Application and Implementation** ... 9
8.1 Application Information ... 9
8.2 Typical Applications ... 9
9 **Power Supply Recommendations** ... 17
10 **Layout** ... 17
10.1 Layout Guidelines ... 17
10.2 Layout Example ... 17
11 デバイスおよびドキュメントのサポート ... 18
11.1 デバイス・サポート ... 18
11.2 ドキュメントの更新通知を受け取る方法 ... 18
11.3 コミュニティ・リソース ... 18
11.4 商標 ... 18
11.5 静電気放電に関する注意事項 ... 18
11.6 Glossary ... 19
12 メカニカル、パッケージ、および注文情報 ... 19

4 改訂履歴

Revision C (June 2015) から Revision D に変更 **Page**

- WEBENCH へのリンク 追加 ... 1
- Changed *Shutdown and Load Discharge* output voltage value from "3.3 V" to "4.3 V" ... 8

Revision B (December 2014) から Revision C に変更 **Page**

- 「*特長*」の「VSON パッケージ」を「WSON パッケージ」に変更 ... 1
- Changed the pinout title From "QFN Package 10 Pins" To: "DSK Package 10 Pins (WSON)" ... 3
- Changed "VSON" to "WSON" in the *Thermal Information* table ... 5
- Deleted the *Dissipation Ratings* table ... 5

Revision A (October 2009) から Revision B に変更 **Page**

- 「*ESD 定格*」表、「*機能説明*」セクション、「*デバイスの機能モード*」セクション、「*アプリケーションと実装*」セクション、「*電源に関する推奨事項*」セクション、「*レイアウト*」セクション、「*デバイスおよびドキュメントのサポート*」セクション、「*メカニカル、パッケージ、および注文情報*」セクション 追加 ... 1

2009年9月発行のものから更新 **Page**

- Added information to OPERATION description ... 7
- Changed *Output Program* description ... 10
- Changed *Output Program* equations ... 10

Copyright © 2009–2019, Texas Instruments Incorporated

5 Pin Configuration and Functions

DSK Package
10 Pins (WSON)
Top View

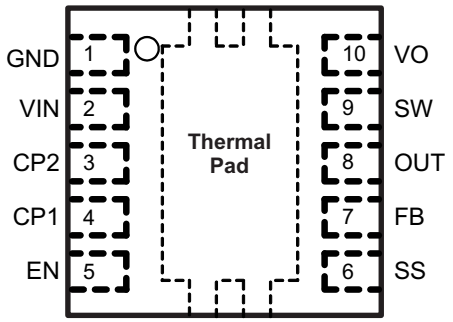

Pin Functions

PIN		I/O	DESCRIPTION
NAME	NO.		
CP1, CP2	3, 4		Connect to flying capacitor for internal charge pump.
EN	5	I	Enable pin (HIGH = enable). When the pin is pulled low for 1 ms, the IC turns off and consumes less than 1-μA current.
FB	7	I	Voltage feedback pin for output regulation, 0.5-V regulated voltage. An external resistor divider connected to this pin programs the regulated output voltage.
GND	1	–	Ground of the IC.
OUT	8	O	Isolation switch is between this pin and VO pin. Connect load to this pin for input/output isolation during IC shutdown. See *Without Isolation FET* for the tradeoff between isolation and efficiency.
SS	6	I	Soft start pin. A RC network connecting to the SS pin programs soft start timing. See *Start-Up*.
SW	9	I	Switching node of the IC where the internal PWM switch operates.
Thermal Pad	–	–	It should be soldered to the ground plane. If possible, use thermal via to connect to ground plane for ideal power dissipation.
VIN	2	I	IC Supply voltage input.
VO	10	O	Output of the boost converter. When the output voltage exceeds the overvoltage protection (OVP) threshold, the power switch turns off until VO drops below the overvoltage protection hysteresis.

6 Specifications

6.1 Absolute Maximum Ratings

over operating free-air temperature (unless otherwise noted) (1)

		MIN	MAX	UNIT
	Supply voltage on pin VIN (2)	–0.3	7	V
	Voltage on pins CP2, EN, and SS (2)	–0.3	7	V
	Voltage on pin CP1 and FB (2)	–0.3	3	V
	Voltage on pin SW, VO, and OUT (2)	–0.3	20	V
T_A	Operating temperature	–40	85	°C
T_J	Maximum operating junction temperature		150	°C
T_{stg}	Storage temperature	–55	150	°C

(1) Stresses beyond those listed under *Absolute Maximum Ratings* may cause permanent damage to the device. These are stress ratings only and functional operation of the device at these or any other conditions beyond those indicated under *Recommended Operating Conditions* is not implied. Exposure to absolute-maximum-rated conditions for extended periods may affect device reliability.
(2) All voltage values are with respect to network ground terminal.

Copyright © 2009–2019, Texas Instruments Incorporated

6.2 ESD Ratings

			VALUE	UNIT
$V_{(ESD)}$	Electrostatic discharge	Human-body model (HBM), per ANSI/ESDA/JEDEC JS-001 (1)	±2000	V
		Charged-device model (CDM), per JEDEC specification JESD22-C101 (2)	±750	

(1) JEDEC document JEP155 states that 500-V HBM allows safe manufacturing with a standard ESD control process.
(2) JEDEC document JEP157 states that 250-V CDM allows safe manufacturing with a standard ESD control process.

6.3 Recommended Operating Conditions

over operating free-air temperature range (unless otherwise noted)

		MIN	NOM	MAX	UNIT
V_i	Input voltage range	1.6		6	V
V_o	Output voltage range at VO pin			17	V
L	Inductor (1)	2.2	4.7	10	µH
C_{in}	Input capacitor	4.7			µF
C_o	Output capacitor at OUT pin (1)	1		10	µF
C_{fly}	Flying capacitor at CP1 and CP2 pins	10			nF
T_J	Operating junction temperature	–40		125	°C
T_A	Operating free-air temperature	–40		85	°C

(1) These values are recommended values that have been successfully tested in several applications. Other values may be acceptable in other applications but should be fully tested by the user.

6.4 Thermal Information

THERMAL METRIC (1)		TPS61093 WSON 10 PINS	UNIT
$R_{\theta JA}$	Junction-to-ambient thermal resistance	49.2	°C/W
$R_{\theta JC(top)}$	Junction-to-case (top) thermal resistance	63.3	
$R_{\theta JB}$	Junction-to-board thermal resistance	23.4	
ψ_{JT}	Junction-to-top characterization parameter	1.1	
ψ_{JB}	Junction-to-board characterization parameter	23.0	
$R_{\theta JC(bot)}$	Junction-to-case (bottom) thermal resistance	5.7	

(1) For more information about traditional and new thermal metrics, see the *IC Package Thermal Metrics* application report, SPRA953.

Copyright © 2009–2019, Texas Instruments Incorporated

6.5 Electrical Characteristics

VIN = 3.6 V, EN = VIN, T_A = –40°C to 85°C, typical values are at T_A = 25°C (unless otherwise noted)

PARAMETER		TEST CONDITIONS	MIN	TYP	MAX	UNIT
SUPPLY CURRENT						
V_{IN}	Input voltage range, VIN		1.6		6	V
I_Q	Operating quiescent current into VIN	Device PWM switching no load		0.9	1.5	mA
I_{SD}	Shutdown current	EN = GND, VIN = 6 V			1	µA
UVLO	Undervoltage lockout threshold	VIN falling		1.5	1.55	V
V_{hys}	Undervoltage lockout hysterisis			50		mV
ENABLE AND PWM CONTROL						
V_{ENH}	EN logic high voltage	VIN = 1.6 V to 6 V	1.2			V
V_{ENL}	EN logic low voltage	VIN = 1.6 V to 6 V			0.3	V
R_{EN}	EN pull down resistor		400	800	1600	kΩ
T_{off}	EN pulse width to shutdown	EN high to low			1	ms
VOLTAGE CONTROL						
V_{REF}	Voltage feedback regulation voltage		0.49	0.5	0.51	V
I_{FB}	Voltage feedback input bias current				100	nA
f_S	Oscillator frequency		1.0	1.2	1.4	MHz
D_{max}	Maximum duty cycle	V_{FB} = 0.1 V, T_A = 85°C	90%	93%		
T_{min_on}	Minimum on pulse width			65		ns
POWER SWITCH, ISOLATION FET						
$R_{DS(ON)N}$	N-channel MOSFET on-resistance	VIN = 3 V		0.25	0.4	Ω
$R_{DS(ON)iso}$	Isolation FET on-resistance	VO = 5 V		2.5	4	Ω
		VO = 3.5 V		4.5		
I_{LN_N}	N-channel leakage current	V_{DS} = 20 V, T_A = 25°C			1	µA
I_{LN_iso}	Isolation FET leakage current	V_{DS} = 20 V, T_A = 25°C			1	µA
V_F	Power diode forward voltage	Current = 500 mA		0.8		V
OC, ILIM, OVP SC AND SS						
I_{LIM}	N-Channel MOSFET current limit		0.9	1.1	1.5	A
V_{ovp}	Overvoltage protection threshold	Measured on the VO pin	18	19		V
V_{ovp_hys}	Overvoltage protection hysteresis			0.6		V
I_{OL}	Overload protection		200	300		mA
THERMAL SHUTDOWN						
$T_{shutdown}$	Thermal shutdown threshold			150		°C
$T_{hysteresis}$	Thermal shutdown hysteresis			15		°C

6.6 Typical Characteristics

Table 1. Table Of Graphs

Figure 1, L = TOKO #A915_Y-100M, unless otherwise noted			FIGURE
η	Efficiency	vs Load current at OUT = 15 V	Figure 1
η	Efficiency	vs Load current at OUT = 10 V	Figure 2
V_{FB}	FB voltage	vs Free-air temperature	Figure 3
V_{FB}	FB voltage	vs Input voltage	Figure 4
I_{LIM}	Switch current limit	vs Free-air temperature	Figure 5

Copyright © 2009–2019, Texas Instruments Incorporated

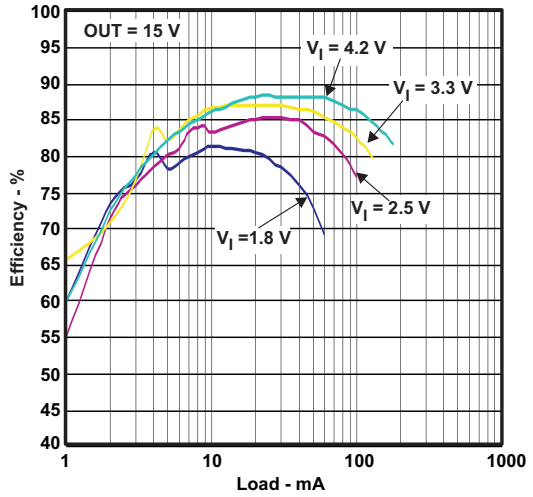

Figure 1. Efficiency vs Load

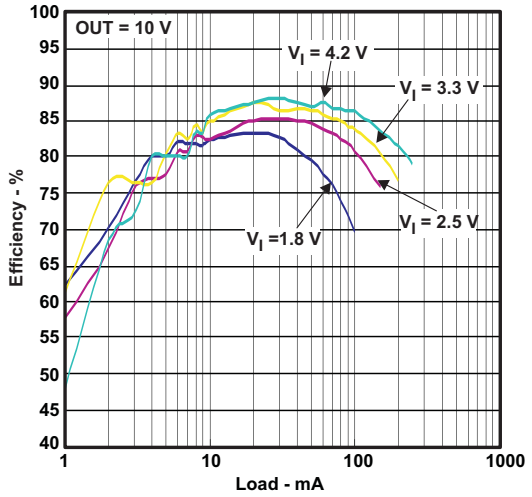

Figure 2. Efficiency vs Load

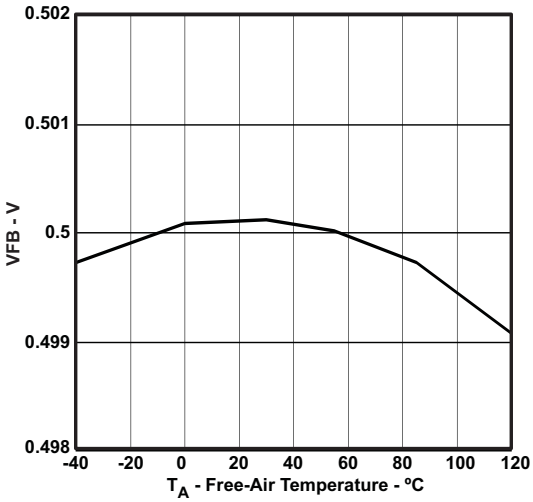

Figure 3. FB Voltage vs Free-Air Temperature

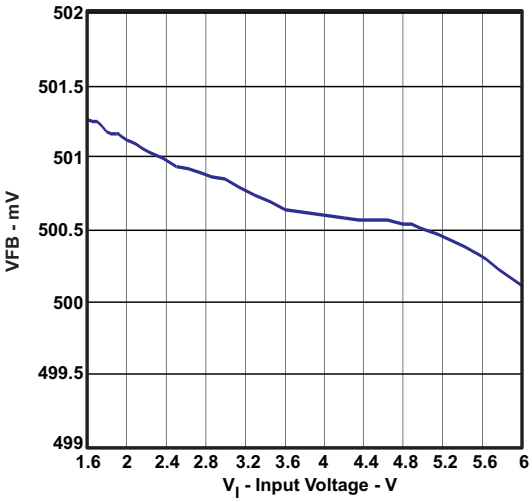

Figure 4. FB Voltage vs Input Voltage

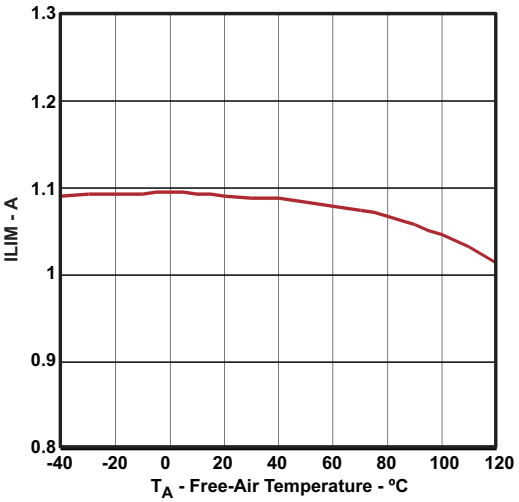

Figure 5. Switch Current Limit vs Free-Air Temperature

Copyright © 2009–2019, Texas Instruments Incorporated

7 Detailed Description

7.1 Overview

The TPS61093 is a highly integrated boost regulator for up to 17-V output. In addition to the on-chip 1-A PWM switch and power diode, this IC also integrates an output-side isolation switch as shown in the functional block diagram. One common issue with conventional boost regulators is the conduction path from input to output even when the PWM switch is turned off. It creates three problems, which are inrush current during start-up, output leakage current during shutdown, and excessive overload current. In the TPS61093, the isolation switch turns off under shutdown-mode and overload conditions, thereby opening the current path. However, shorting the VO and OUT pins bypasses the isolation switch and enhances efficiency. Because the isolation switch is on the output side, the IC's VIN pin and power stage input power (up to 10 V) can be separated.

The TPS61093 adopts current-mode control with constant pulse-width-modulation (PWM) frequency. The switching frequency is fixed at 1.2 MHz typical. PWM operation turns on the PWM switch at the beginning of each switching cycle. The input voltage is applied across the inductor and the inductor current ramps up. In this mode, the output capacitor is discharged by the load current. When the inductor current hits the threshold set by the error amplifier output, the PWM switch is turned off, and the power diode is forward-biased. The inductor transfers its stored energy to replenish the output capacitor. This operation repeats in the next switching cycle. The error amplifier compares the FB-pin voltage with an internal reference, and its output determines the duty cycle of the PWM switching. This closed-loop system requires frequency compensation for stable operation. The device has a built-in compensation circuit that can accommodate a wide range of input and output voltages. To avoid the sub-harmonic oscillation intrinsic to current-mode control, the IC also integrates slope compensation, which adds an artificial slope to the current ramp.

7.2 Functional Block Diagram

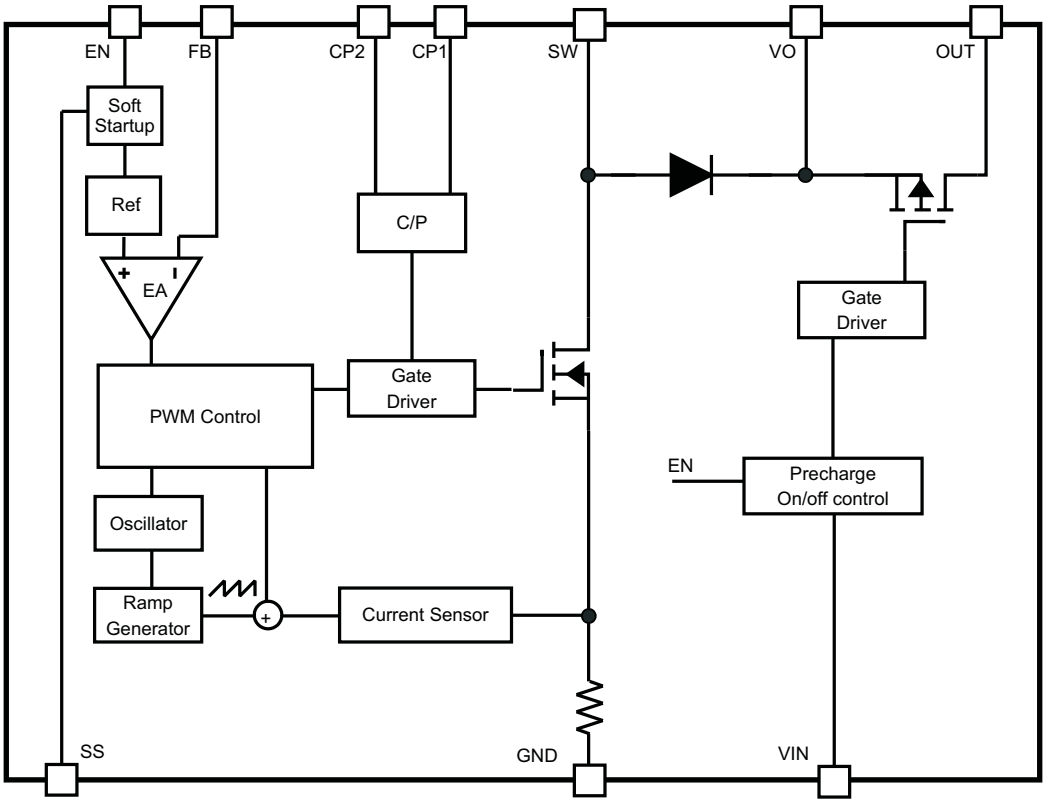

7.3 Feature Description

7.3.1 Shutdown and Load Discharge

When the EN pin is pulled low for 1 ms, the IC stops the PWM switch and turns off the isolation switch, providing isolation between input and output. The internal current path consisting of the isolation switch's body diode and several parasitic diodes quickly discharges the output voltage to less than 4.3 V. Afterwards, the voltage is slowly discharged to zero by the leakage current. This protects the IC and the external components from high voltage in shutdown mode.

In shutdown mode, less than 1 μA of input current is consumed by the IC.

7.3.2 Overload and Overvoltage Protection

If the overload current passing through the isolation switch is above the overload limit (I_{OL}) for 3-μs (typical), the TPS61093 is switched off until the fault is cleared and the EN pin toggles. The function only is triggered 52 ms after the IC is enabled.

To prevent the PWM switch and the output capacitor from exceeding maximum voltage ratings, an overvoltage protection circuit turns off the boost switch as soon as the output voltage at the VO pin exceeds the OVP threshold. Simultaneously, the IC opens the isolation switch. The regulator resumes PWM switching after the VO pin voltage falls 0.6 V below the threshold.

7.3.3 UVLO

An undervoltage lockout prevents improper operation of the device for input voltages below 1.55 V. When the input voltage is below the undervoltage threshold, the entire device, including the PWM and isolation switches, remains off.

7.3.4 Thermal Shutdown

An internal thermal shutdown turns off the isolation and PWM switches when the typical junction temperature of 150°C is exceeded. The thermal shutdown has a hysteresis of 15°C, typical.

7.4 Device Functional Modes

The converter operates in continuous conduction mode (CCM) as soon as the input current increases above half the ripple current in the inductor, for lower load currents it switches into discontinuous conduction mode (DCM). If the load is further reduced, the part starts to skip pulses to maintain the output voltage.

Copyright © 2009–2019, Texas Instruments Incorporated

8 Application and Implementation

NOTE

Information in the following applications sections is not part of the TI component specification, and TI does not warrant its accuracy or completeness. TI's customers are responsible for determining suitability of components for their purposes. Customers should validate and test their design implementation to confirm system functionality.

8.1 Application Information

The device is a step up DC-DC converter with a PWM switch, a power diode and an input/output isolation switch integrated. TPS61093 supports up to 17-V output with the input range from 1.6 V to 6 V. The TPS61093 adopts the current-mode control with constant pulse-width-modulation (PWM) frequency. The switching frequency is fixed at 1.2 MHz typical. The isolation switch disconnects the output from the input during shutdown to minimize leakage current. However, shorting the VO and OUT pins bypasses the isolation switch and enhances efficiency. The following design procedure can be used to select component values for the TPS61093.

8.2 Typical Applications

8.2.1 15 V Output Boost Converter

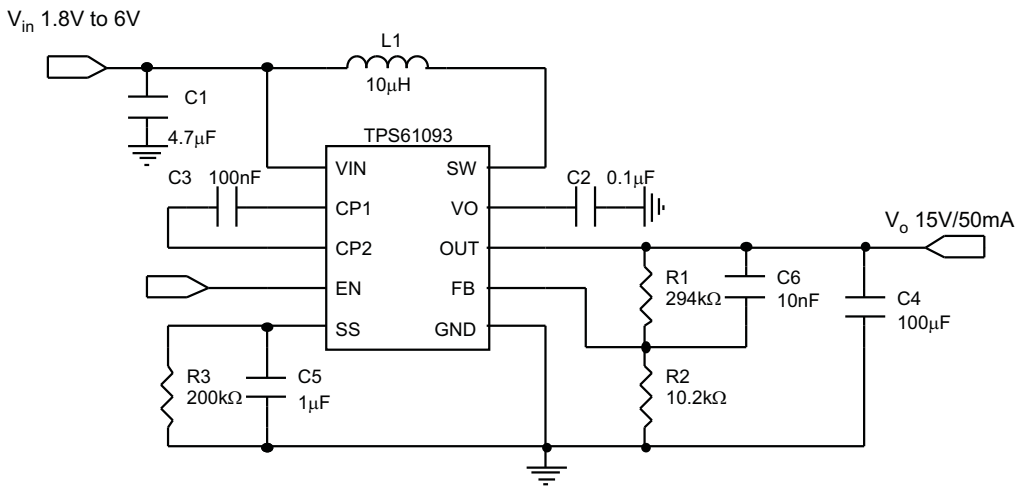

Figure 6. 15 V Boost Converter with 100 µF Output Capacitor

8.2.1.1 Design Requirements

Table 2. Design Parameters

PARAMETERS	VALUES
Input voltage	4.2 V
Output voltage	15 V
Operating frequency	1.2 MHz

8.2.1.2 Detailed Design Procedure

8.2.1.2.1 Custom Design With WEBENCH® Tools

Click here to create a custom design using the TPS61093 device with the WEBENCH® Power Designer.

1. Start by entering the input voltage (V_{IN}), output voltage (V_{OUT}), and output current (I_{OUT}) requirements.
2. Optimize the design for key parameters such as efficiency, footprint, and cost using the optimizer dial.
3. Compare the generated design with other possible solutions from Texas Instruments.

The WEBENCH Power Designer provides a customized schematic along with a list of materials with real-time pricing and component availability.

In most cases, these actions are available:

- Run electrical simulations to see important waveforms and circuit performance
- Run thermal simulations to understand board thermal performance
- Export customized schematic and layout into popular CAD formats
- Print PDF reports for the design, and share the design with colleagues

Get more information about WEBENCH tools at www.ti.com/WEBENCH.

8.2.1.2.2 Output Program

To program the output voltage, select the values of R1 and R2 (see Figure 7) according to Equation 1.

$$\text{Vout} = 0.5\ \text{V} \times \left(\frac{\text{R1}}{\text{R2}} + 1\right)$$

$$\text{R1} = \text{R2} \times \left(\frac{\text{Vout}}{0.5\ \text{V}} - 1\right) \tag{1}$$

A recommended value for R2 is approximately 10 kΩ which sets the current in the resistor divider chain to 0.5 V/10 kΩ = 50 μA. The output voltage tolerance depends on the VFB accuracy and the resistor divider.

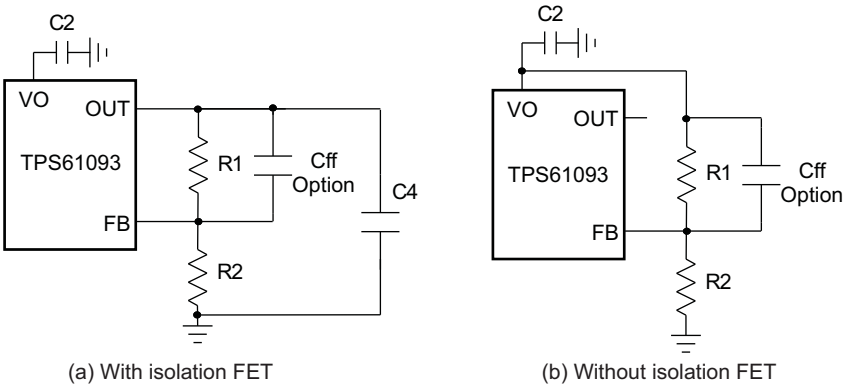

Figure 7. Resistor Divider to Program Output Voltage

8.2.1.2.3 Without Isolation FET

The efficiency of the TPS61093 can be improved by connecting the load to the VO pin instead of the OUT pin. The power loss in the isolation FET is then negligible, as shown in Figure 8. The tradeoffs when bypassing the isolation FET are:

- Leakage path between input and output causes the output to be a diode drop below the input voltage when the IC is in shutdown
- No overload circuit protection

When the load is connected to the VO pin, the output capacitor on the VO pin must be above 1 μF.

Copyright © 2009–2019, Texas Instruments Incorporated

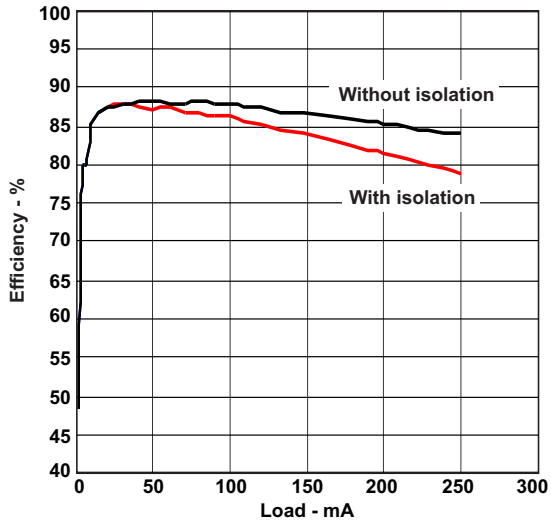

Figure 8. Efficiency vs Load

8.2.1.2.4 Start-Up

The TPS61093 turns on the isolation FET and PWM switch when the EN pin is pulled high. During the soft-start period, the R and C network on the SS pin is charged by an internal bias current of 5 μA (typical). The RC network sets the reference voltage ramp up slope. Because the output voltage follows the reference voltage via the FB pin, the output voltage rise time follows the SS pin voltage until the SS pin voltage reaches 0.5 V. The soft-start time is given by Equation 2.

$$t_{SS} = \frac{0.5\ V \times C5}{5\ \mu A}$$

where

- C5 is the capacitor connected to the SS pin (2)

When the EN pin is pulled low to switch the IC off, the SS pin voltage is discharged to zero by the resistor R3. The discharge period depends on the RC time constant. Note that if the SS pin voltage is not discharged to zero before the IC is enabled again, the soft start circuit may not slow the output voltage startup and may not reduce the startup inrush current.

8.2.1.2.5 Switch Duty Cycle

The maximum switch duty cycle (D) of the TPS61093 is 90% (minimum). The duty cycle of a boost converter under continuous conduction mode (CCM) is given by:

$$D = \frac{Vout + 0.8\ V - Vin}{Vout + 0.8\ V} \quad (3)$$

The duty cycle must be lower than the specification in the application; otherwise the output voltage cannot be regulated.

The TPS61093 has a minimum ON pulse width once the PWM switch is turned on. As the output current drops, the device enters discontinuous conduction mode (DCM). If the output current drops extremely low, causing the ON time to be reduced to the minimum ON time, the TPS61093 enters pulse-skipping mode. In this mode, the device keeps the power switch off for several switching cycles to keep the output voltage in regulation. See Figure 14. The output current when the IC enters skipping mode is calculated with Equation 4.

$$I_{out_skip} = \frac{Vin^2 \times T^2_{min_on} \times f_{SW}}{2 \times (Vout + 0.8V - Vin) \times L}$$

where

- T_{min_on} = Minimum ON pulse width specification (typically 65-ns);
- L = Selected inductor value;
- f_{SW} = Converter switching frequency (typically 1.2-MHz) (4)

8.2.1.2.6 Inductor Selection

Because the selection of the inductor affects steady state operation, transient behavior, and loop stability, the inductor is the most important component in power regulator design. There are three important inductor specifications, inductor value, saturation current, and dc resistance. Considering inductor value alone is not enough.

The saturation current of the inductor should be higher than the peak switch current as calculated in Equation 5.

$$I_{L_peak} = I_{L_DC} + \frac{\Delta I_L}{2}$$

$$I_{L_DC} = \frac{Vout \times Iout}{Vin \times \eta}$$

$$\Delta I_L = \frac{1}{\left[L \times f_{SW} \times \left(\frac{1}{Vout + 0.8\ V - VIN} + \frac{1}{VIN}\right)\right]}$$

where

- I_{L_peak} = Peak switch current
- I_{L_DC} = Inductor average current
- ΔI_L = Inductor peak to peak current
- η = Estimated converter efficiency (5)

Normally, it is advisable to work with an inductor peak-to-peak current of less than 30% of the average inductor current. A smaller ripple from a larger valued inductor reduces the magnetic hysteresis losses in the inductor and EMI. But in the same way, load transient response time is increased. Also, the inductor value should not be outside the 2.2 µH to 10 µH range in the recommended operating conditions table. Otherwise, the internal slope compensation and loop compensation components are unable to maintain small signal control loop stability over the entire load range. Table 3 lists the recommended inductor for the TPS61093.

Table 3. Recommended Inductors for the TPS61093

PART NUMBER	L (µH)	DCR MAX (mΩ)	SATURATION CURRENT (A)	SIZE (L×W×H mm)	VENDOR
#A915_Y-4R7M	4.7	45	1.5	5.2x5.2x3.0	Toko
#A915_Y-100M	10	90	1.09	5.2x5.2x3.0	Toko
VLS4012-4R7M	4.7	132	1.1	4.0x4.0x1.2	TDK
VLS4012-100M	10	240	0.82	4.0x4.0x1.2	TDK
CDRH3D23/HP	10	198	1.02	4.0x4.0x2.5	Sumida
LPS5030-103ML	10	127	1.4	5.0x5.0x3.0	Coilcraft

Copyright © 2009–2019, Texas Instruments Incorporated

8.2.1.2.7 Input and Output Capacitor Selection

The output capacitor is mainly selected to meet the requirements for output ripple and loop stability. This ripple voltage is related to the capacitor's capacitance and its equivalent series resistance (ESR). Assuming a ceramic capacitor with zero ESR, the minimum capacitance needed for a given ripple can be calculated by:

$$C_{out} = \frac{D \times I_{out}}{Fs \times V_{ripple}}$$

where

- V_{ripple} = peak to peak output ripple (6)

The ESR impact on the output ripple must be considered if tantalum or electrolytic capacitors are used.

Care must be taken when evaluating a ceramic capacitor's derating under dc bias, aging, and ac signal. For example, larger form factor capacitors (in 1206 size) have their self resonant frequencies in the range of the switching frequency. So the effective capacitance is significantly lower. The dc bias can also significantly reduce capacitance. A ceramic capacitor can lose as much as 50% of its capacitance at its rated voltage. Therefore, always leave margin on the voltage rating to ensure adequate capacitance at the required output voltage.

A 4.7-μF (minimum) input capacitor is recommended. The output requires a capacitor in the range of 1 μF to 10 μF. The output capacitor affects the small signal control loop stability of the boost regulator. If the output capacitor is below the range, the boost regulator can potentially become unstable.

The popular vendors for high value ceramic capacitors are:

- TDK (http://www.component.tdk.com/components.php)
- Murata (http://www.murata.com/cap/index.html)

8.2.1.2.8 Small Signal Stability

The TPS61093 integrates slope compensation and the RC compensation network for the internal error amplifier. Most applications are control loop stable if the recommended inductor and input/output capacitors are used. For those few applications that require components outside the recommended values, the internal error amplifier's gain and phase are presented in Figure 9.

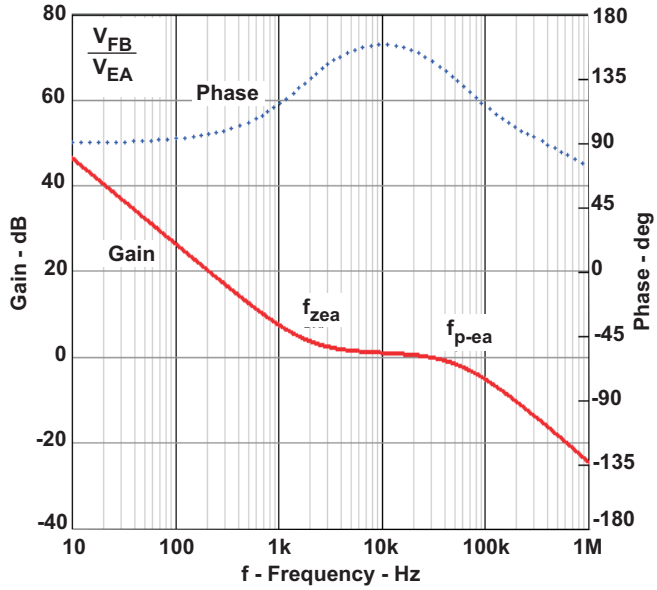

Figure 9. Bode Plot of Error Amplifier Gain and Phase

The RC compensation network generates a pole $f_{p\text{-}ea}$ of 57 kHz and a zero $f_{z\text{-}ea}$ of 1.9 kHz, shown in Figure 9. Use Equation 7 to calculate the output pole, f_P, of the boost converter. If $f_P << f_{z\text{-}ea}$. due to a large capacitor beyond 10 µF, for example, a feed forward capacitor on the resistor divider, as shown in Figure 9, is necessary to generate an additional zero $f_{z\text{-}f}$. to improve the loop phase margin and improve the load transient response. The low frequency pole $f_{p\text{-}f}$ and zero $f_{z\text{-}f}$ generated by the feed forward capacitor are given by Equation 8 and Equation 9:

$$f_P = \frac{1}{\pi \times R_o \times C_O} \quad \text{(a)} \tag{7}$$

$$f_{p\text{-}f} = \frac{1}{2\pi \times R2 \times C_{ff}} \quad \text{(b)} \tag{8}$$

$$f_{z\text{-}f} = \frac{1}{2\pi \times R1 \times C_{ff}} \quad \text{(c)}$$

where

- C_{ff} = the feed-forward capacitor (9)

For example, in the typical application circuitry (see Figure 7), the output pole f_P is approximately 1 kHz. When the output capacitor is increased to 100 µF, then the f_P is reduced to 10 Hz. Therefore, a feed-forward capacitor of 10 nF compensates for the low frequency pole.

A feed-forward capacitor that sets $f_{z\text{-}f}$ near 10 kHz improves the load transient response in most applications, as shown in Figure 11.

Copyright © 2009–2019, Texas Instruments Incorporated

8.2.1.3 Application Curves

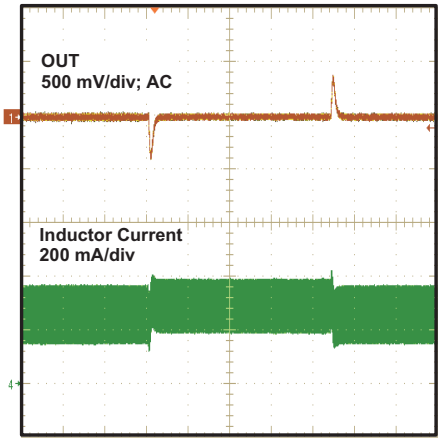

Figure 10. 3.3 V to 3.6 V Line Transient Response

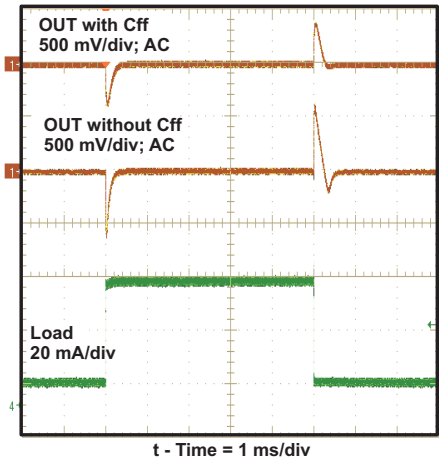

Figure 11. 10 mA to 50 mA Load Transient Response

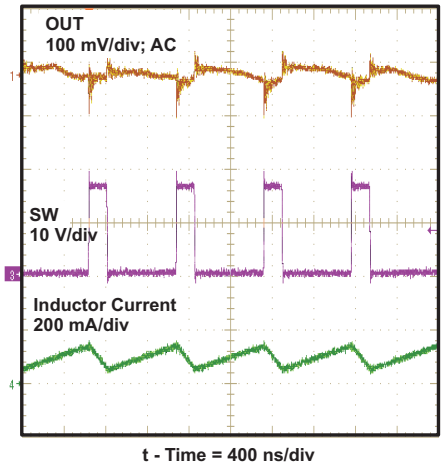

Figure 12. PWM Control in CCM

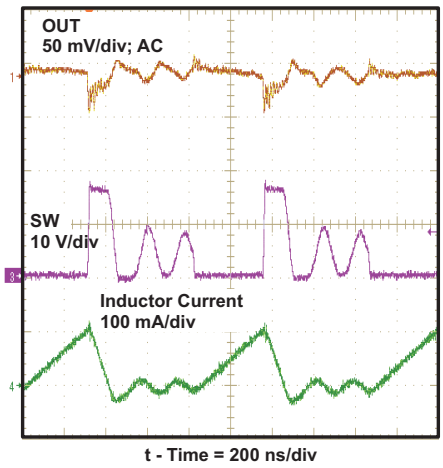

Figure 13. PWM Control in DCM

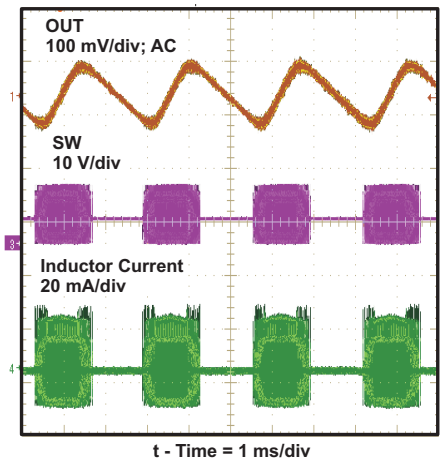

Figure 14. Pulse Skip Mode at Light Load

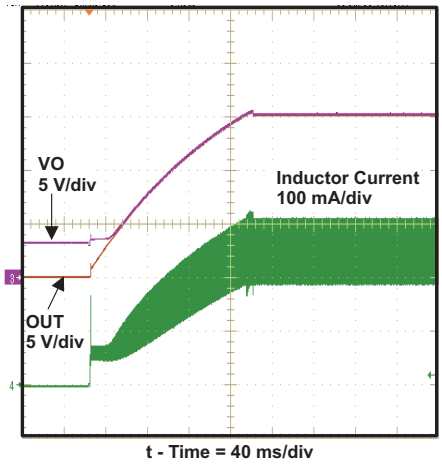

Figure 15. Soft Start-Up

8.2.2 10 V, –10 V Dual Output Boost Converter

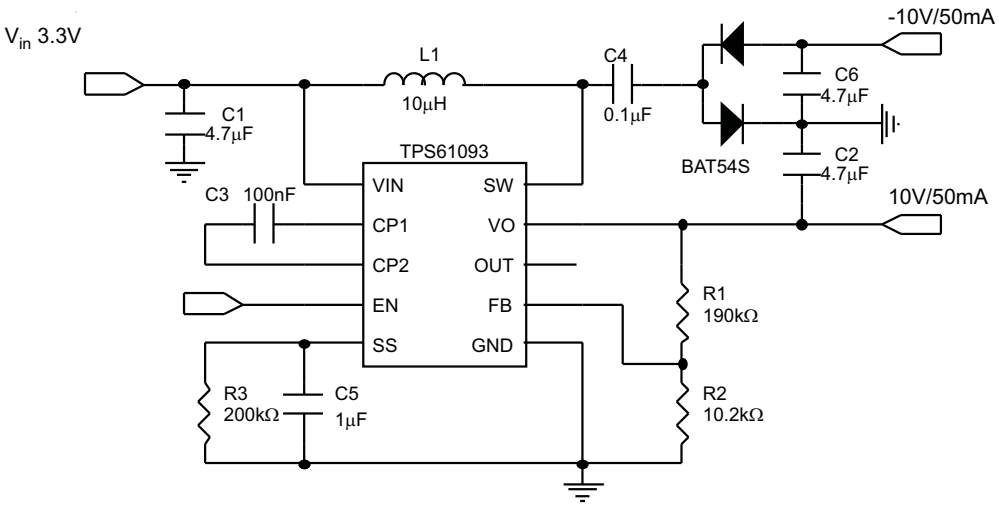

Figure 16. 10 V, –10 V Dual Output Boost Converter Schematic

8.2.2.1 Design Requirements

Table 4. Design Parameters

PARAMETERS	VALUES
Input voltage	3.3 V
Output voltage	10 V/–10 V
Operating frequency	1.2 MHz

8.2.2.2 Detailed Design Procedure

Refer to *Detailed Design Procedure* for the 15-V output boost converter.

8.2.2.3 Application Curve

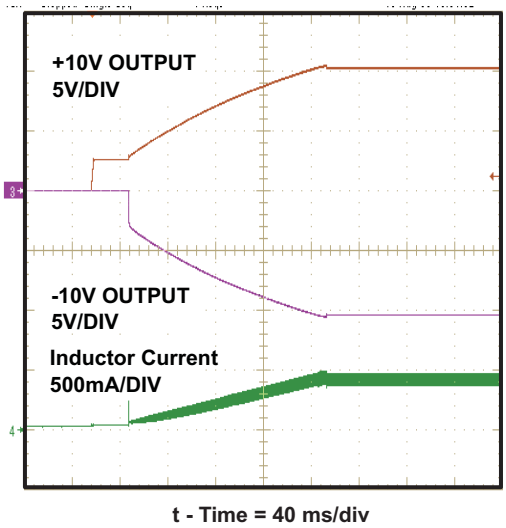

Figure 17. Soft Start-up Waveform, 10 V, -10 V Dual Output Boost Converter

Copyright © 2009–2019, Texas Instruments Incorporated

9 Power Supply Recommendations

The device is designed to operate from an input voltage supply range between 1.6 V to 6 V. The input power supply's output current needs to be rated according to the supply voltage, output voltage and output current of the TPS61093.

10 Layout

10.1 Layout Guidelines

As for all switching power supplies, especially those running at high switching frequency and high currents, layout is an important design step. If layout is not carefully done, the regulator could suffer from instability as well as noise problems. To maximize efficiency, switch rise and fall times are very fast. To prevent radiation of high frequency noise (for example, EMI), proper layout of the high frequency switching path is essential. Minimize the length and area of all traces connected to the SW pin and always use a ground plane under the switching regulator to minimize interplane coupling. The high current path including the switch and output capacitor contains nanosecond rise and fall times and should be kept as short as possible. The input capacitor needs not only to be close to the VIN pin, but also to the GND pin in order to reduce input supply ripple.

10.2 Layout Example

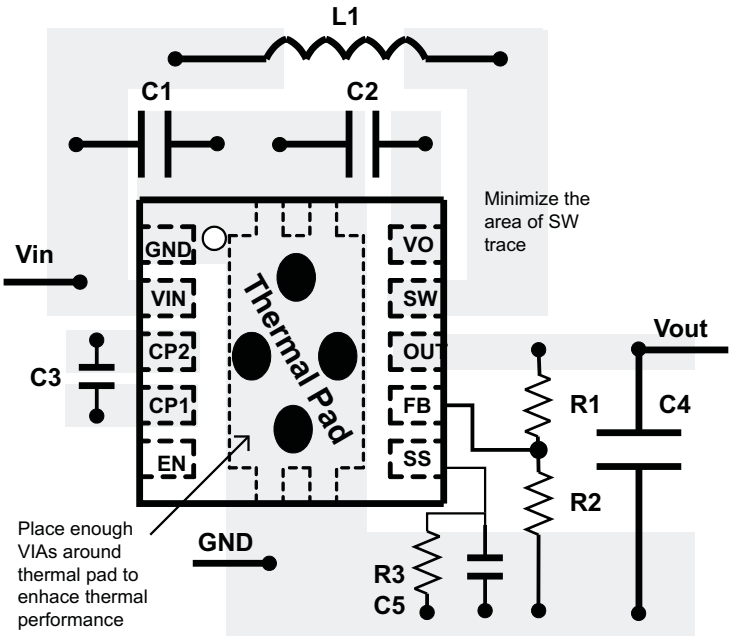

Figure 18. TPS61093QFN Board Layout

11 デバイスおよびドキュメントのサポート

11.1 デバイス・サポート

11.1.1 デベロッパー・ネットワークの製品に関する免責事項

デベロッパー・ネットワークの製品またはサービスに関するTIの出版物は、単独またはTIの製品、サービスと一緒に提供される場合に関係なく、デベロッパー・ネットワークの製品またはサービスの適合性に関する是認、デベロッパー・ネットワークの製品またはサービスの是認の表明を意味するものではありません。

11.1.2 開発サポート

11.1.2.1 WEBENCH®ツールによるカスタム設計

ここをクリックすると、WEBENCH® Power Designer により、TPS61093 デバイスを使用するカスタム設計を作成できます。

1. 最初に、入力電圧(V_{IN})、出力電圧(V_{OUT})、出力電流(I_{OUT})の要件を入力します。
2. オプティマイザのダイヤルを使用して、効率、占有面積、コストなどの主要なパラメータについて設計を最適化します。
3. 生成された設計を、テキサス・インスツルメンツが提供する他の方式と比較します。

WEBENCH Power Designerでは、カスタマイズされた回路図と部品リストを、リアルタイムの価格と部品の在庫情報と併せて参照できます。

通常、次の操作を実行可能です。

- 電気的なシミュレーションを実行し、重要な波形と回路の性能を確認する。
- 熱シミュレーションを実行し、基板の熱特性を把握する。
- カスタマイズされた回路図やレイアウトを、一般的なCADフォーマットで出力する。
- 設計のレポートをPDFで印刷し、設計を共有する。

WEBENCHツールの詳細は、www.ti.com/WEBENCHでご覧になれます。

11.2 ドキュメントの更新通知を受け取る方法

ドキュメントの更新についての通知を受け取るには、ti.comのデバイス製品フォルダを開いてください。右上の「アラートを受け取る」をクリックして登録すると、変更されたすべての製品情報に関するダイジェストを毎週受け取れます。変更の詳細については、修正されたドキュメントに含まれている改訂履歴をご覧ください。

11.3 コミュニティ・リソース

The following links connect to TI community resources. Linked contents are provided "AS IS" by the respective contributors. They do not constitute TI specifications and do not necessarily reflect TI's views; see TI's Terms of Use.

TI E2E™ Online Community ***TI's Engineer-to-Engineer (E2E) Community.*** Created to foster collaboration among engineers. At e2e.ti.com, you can ask questions, share knowledge, explore ideas and help solve problems with fellow engineers.

Design Support ***TI's Design Support*** Quickly find helpful E2E forums along with design support tools and contact information for technical support.

11.4 商標

E2E is a trademark of Texas Instruments.
WEBENCH is a registered trademark of Texas Instruments.
All other trademarks are the property of their respective owners.

11.5 静電気放電に関する注意事項

これらのデバイスは、限定的なESD（静電破壊）保護機能を内 蔵しています。保存時または取り扱い時は、MOSゲートに対す る静電破壊を防止するために、リード線同士をショートさせて おくか、デバイスを導電フォームに入れる必要があります。

Copyright © 2009–2019, Texas Instruments Incorporated

11.6 Glossary

SLYZ022 — *TI Glossary*.

This glossary lists and explains terms, acronyms, and definitions.

12 メカニカル、パッケージ、および注文情報

以降のページには、メカニカル、パッケージ、および注文に関する情報が記載されています。この情報は、そのデバイスについて利用可能な最新のデータです。このデータは予告なく変更されることがあり、ドキュメントが改訂される場合もあります。本データシートのブラウザ版を使用されている場合は、画面左側の説明をご覧ください。

PACKAGING INFORMATION

Orderable part number	Status (1)	Material type (2)	Package | Pins	Package qty | Carrier	RoHS (3)	Lead finish/ Ball material (4)	MSL rating/ Peak reflow (5)	Op temp (°C)	Part marking (6)
TPS61093DSKR	Active	Production	SON (DSK) | 10	3000 | LARGE T&R	Yes	Call TI | Nipdau	Level-1-260C-UNLIM	-40 to 125	OAP
TPS61093DSKR.A	Active	Production	SON (DSK) | 10	3000 | LARGE T&R	Yes	NIPDAU	Level-1-260C-UNLIM	-40 to 125	OAP
TPS61093DSKT	Active	Production	SON (DSK) | 10	250 | SMALL T&R	Yes	Call TI | Nipdau	Level-1-260C-UNLIM	-40 to 125	OAP
TPS61093DSKT.A	Active	Production	SON (DSK) | 10	250 | SMALL T&R	Yes	NIPDAU	Level-1-260C-UNLIM	-40 to 125	OAP
TPS61093DSKTG4	Active	Production	SON (DSK) | 10	250 | SMALL T&R	Yes	NIPDAU	Level-1-260C-UNLIM	-40 to 125	OAP
TPS61093DSKTG4.A	Active	Production	SON (DSK) | 10	250 | SMALL T&R	Yes	NIPDAU	Level-1-260C-UNLIM	-40 to 125	OAP

(1) **Status:** For more details on status, see our product life cycle.

(2) **Material type:** When designated, preproduction parts are prototypes/experimental devices, and are not yet approved or released for full production. Testing and final process, including without limitation quality assurance, reliability performance testing, and/or process qualification, may not yet be complete, and this item is subject to further changes or possible discontinuation. If available for ordering, purchases will be subject to an additional waiver at checkout, and are intended for early internal evaluation purposes only. These items are sold without warranties of any kind.

(3) **RoHS values:** Yes, No, RoHS Exempt. See the TI RoHS Statement for additional information and value definition.

(4) **Lead finish/Ball material:** Parts may have multiple material finish options. Finish options are separated by a vertical ruled line. Lead finish/Ball material values may wrap to two lines if the finish value exceeds the maximum column width.

(5) **MSL rating/Peak reflow:** The moisture sensitivity level ratings and peak solder (reflow) temperatures. In the event that a part has multiple moisture sensitivity ratings, only the lowest level per JEDEC standards is shown. Refer to the shipping label for the actual reflow temperature that will be used to mount the part to the printed circuit board.

(6) **Part marking:** There may be an additional marking, which relates to the logo, the lot trace code information, or the environmental category of the part.

Multiple part markings will be inside parentheses. Only one part marking contained in parentheses and separated by a "~" will appear on a part. If a line is indented then it is a continuation of the previous line and the two combined represent the entire part marking for that device.

Important Information and Disclaimer: The information provided on this page represents TI's knowledge and belief as of the date that it is provided. TI bases its knowledge and belief on information provided by third parties, and makes no representation or warranty as to the accuracy of such information. Efforts are underway to better integrate information from third parties. TI has taken and continues to take reasonable steps to provide representative and accurate information but may not have conducted destructive testing or chemical analysis on incoming materials and chemicals. TI and TI suppliers consider certain information to be proprietary, and thus CAS numbers and other limited information may not be available for release.

In no event shall TI's liability arising out of such information exceed the total purchase price of the TI part(s) at issue in this document sold by TI to Customer on an annual basis.

OTHER QUALIFIED VERSIONS OF TPS61093 :

- Automotive : TPS61093-Q1

NOTE: Qualified Version Definitions:

- Automotive - Q100 devices qualified for high-reliability automotive applications targeting zero defects

TAPE AND REEL INFORMATION

REEL DIMENSIONS

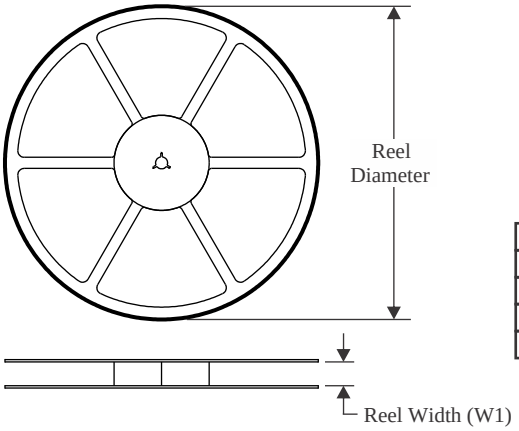

TAPE DIMENSIONS

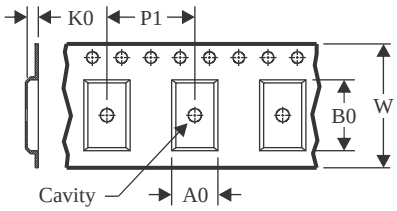

A0	Dimension designed to accommodate the component width
B0	Dimension designed to accommodate the component length
K0	Dimension designed to accommodate the component thickness
W	Overall width of the carrier tape
P1	Pitch between successive cavity centers

QUADRANT ASSIGNMENTS FOR PIN 1 ORIENTATION IN TAPE

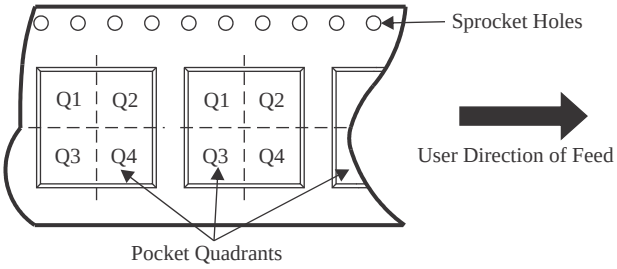

*All dimensions are nominal

Device	Package Type	Package Drawing	Pins	SPQ	Reel Diameter (mm)	Reel Width W1 (mm)	A0 (mm)	B0 (mm)	K0 (mm)	P1 (mm)	W (mm)	Pin1 Quadrant
TPS61093DSKR	SON	DSK	10	3000	180.0	8.4	2.8	2.8	1.0	4.0	8.0	Q2
TPS61093DSKT	SON	DSK	10	250	178.0	8.4	2.75	2.75	0.95	4.0	8.0	Q2
TPS61093DSKT	SON	DSK	10	250	180.0	8.4	2.8	2.8	1.0	4.0	8.0	Q2
TPS61093DSKTG4	SON	DSK	10	250	180.0	8.4	2.8	2.8	1.0	4.0	8.0	Q2

TAPE AND REEL BOX DIMENSIONS

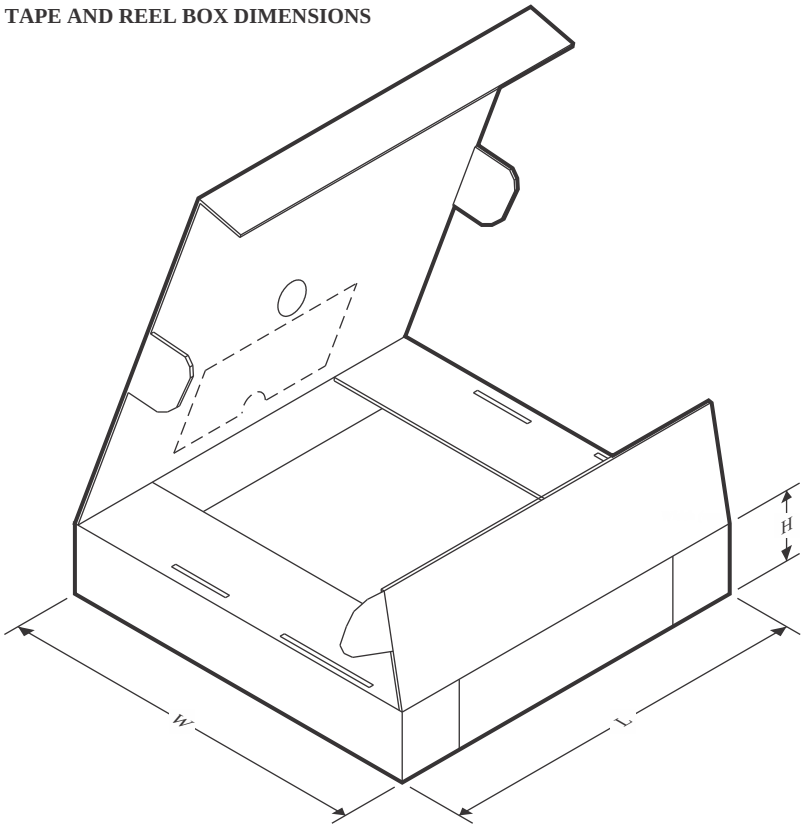

*All dimensions are nominal

Device	Package Type	Package Drawing	Pins	SPQ	Length (mm)	Width (mm)	Height (mm)
TPS61093DSKR	SON	DSK	10	3000	182.0	182.0	20.0
TPS61093DSKT	SON	DSK	10	250	205.0	200.0	33.0
TPS61093DSKT	SON	DSK	10	250	182.0	182.0	20.0
TPS61093DSKTG4	SON	DSK	10	250	182.0	182.0	20.0

DSK 10 WSON - 0.8 mm max height

2.5 x 2.5 mm, 0.5 mm pitch

PLASTIC SMALL OUTLINE - NO LEAD

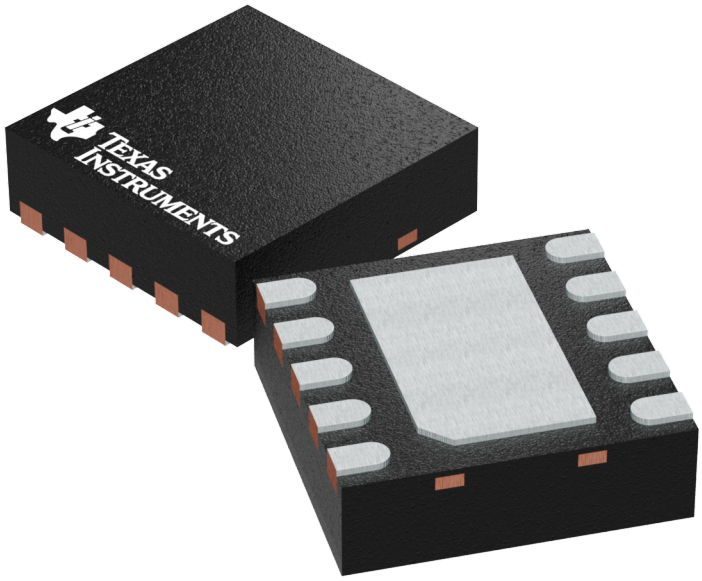

Images above are just a representation of the package family, actual package may vary.
Refer to the product data sheet for package details.

TEXAS INSTRUMENTS

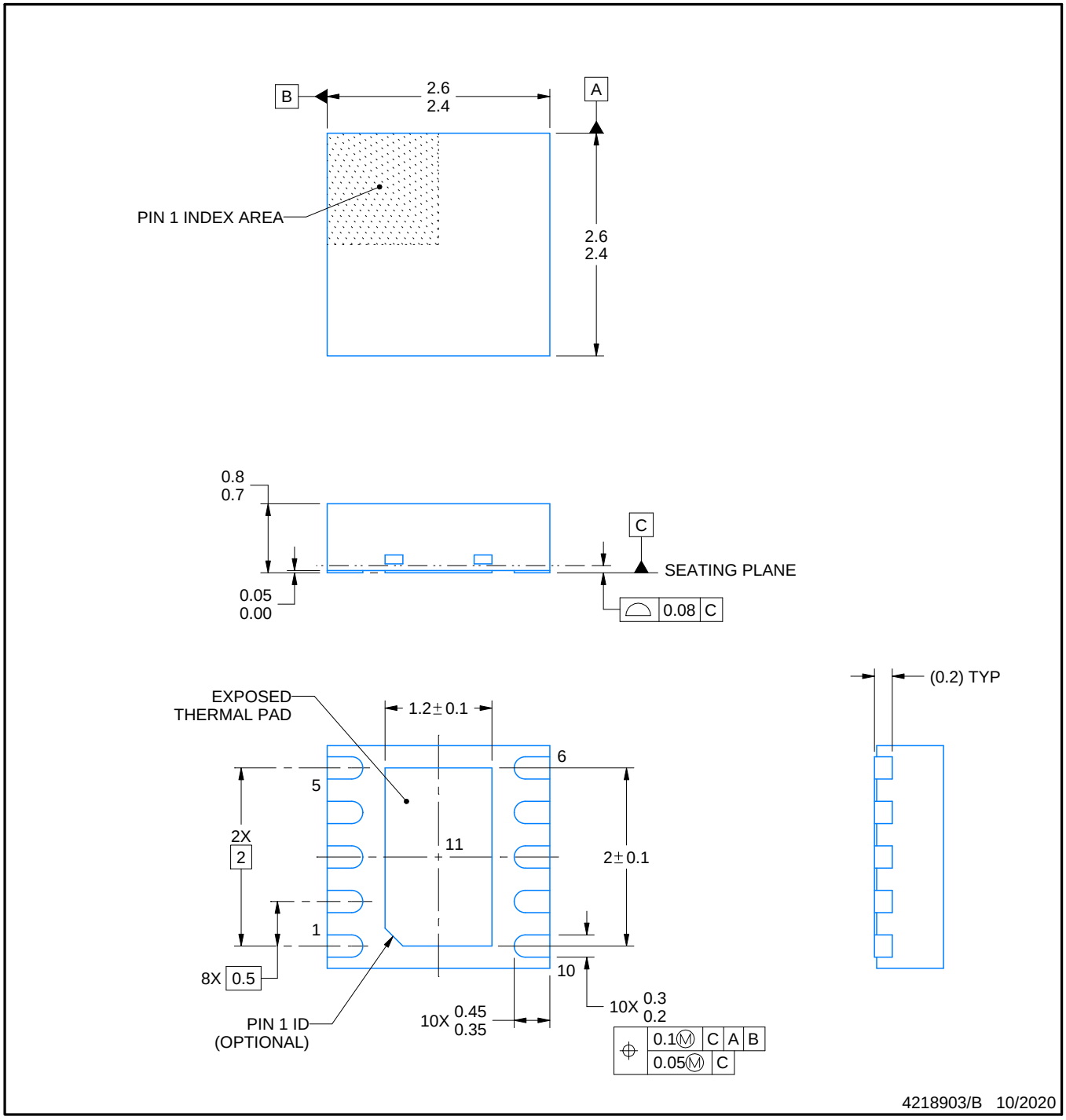

NOTES:

1. All linear dimensions are in millimeters. Any dimensions in parenthesis are for reference only. Dimensioning and tolerancing per ASME Y14.5M.
2. This drawing is subject to change without notice.
3. The package thermal pad must be soldered to the printed circuit board for thermal and mechanical performance.

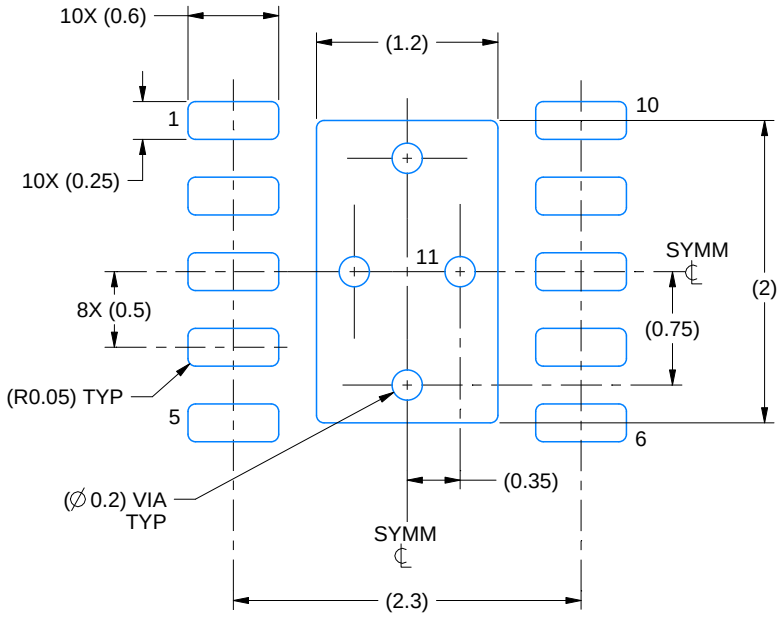

LAND PATTERN EXAMPLE
SCALE:20X

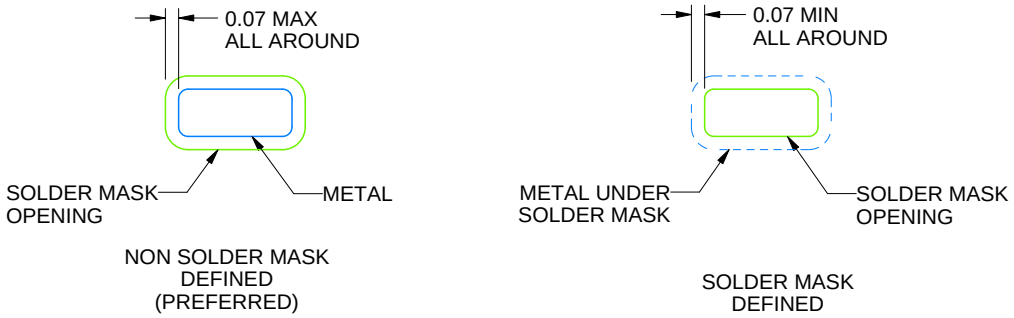

SOLDER MASK DETAILS

4218903/B 10/2020

NOTES: (continued)

4. This package is designed to be soldered to a thermal pad on the board. For more information, see Texas Instruments literature number SLUA271 (www.ti.com/lit/slua271).
5. Vias are optional depending on application, refer to device data sheet. If some or all are implemented, recommended via locations are shown.

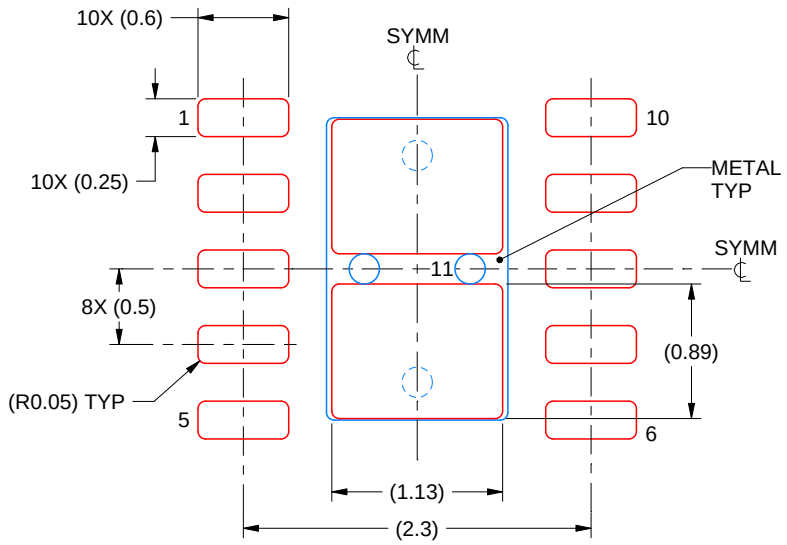

SOLDER PASTE EXAMPLE
BASED ON 0.125 mm THICK STENCIL

EXPOSED PAD 11
84% PRINTED SOLDER COVERAGE BY AREA
SCALE:20X

4218903/B 10/2020

NOTES: (continued)

6. Laser cutting apertures with trapezoidal walls and rounded corners may offer better paste release. IPC-7525 may have alternate design recommendations.

重要なお知らせと免責事項

テキサス· インスツルメンツは、技術データと信頼性データ (データシートを含みます)、設計リソース (リファレンス デザインを含みます)、アプリケーションや設計に関する各種アドバイス、Web ツール、安全性情報、その他のリソースを、欠陥が存在する可能性のある「現状のまま」提供しており、商品性および特定目的に対する適合性の黙示保証、第三者の知的財産権の非侵害保証を含むいかなる保証も、明示的または黙示的にかかわらず拒否します。

これらのリソースは、 テキサス· インスツルメンツ製品を使用する設計の経験を積んだ開発者への提供を意図したものです。(1) お客様のアプリケーションに適した テキサス· インスツルメンツ製品の選定、(2) お客様のアプリケーションの設計、検証、試験、(3) お客様のアプリケーションに該当する各種規格や、その他のあらゆる安全性、セキュリティ、規制、または他の要件への確実な適合に関する責任を、お客様のみが単独で負うものとします。

上記の各種リソースは、予告なく変更される可能性があります。これらのリソースは、リソースで説明されている テキサス· インスツルメンツ製品を使用するアプリケーションの開発の目的でのみ、 テキサス· インスツルメンツはその使用をお客様に許諾します。これらのリソースに関して、他の目的で複製することや掲載することは禁止されています。 テキサス· インスツルメンツや第三者の知的財産権のライセンスが付与されている訳ではありません。お客様は、これらのリソースを自身で使用した結果発生するあらゆる申し立て、損害、費用、損失、責任について、 テキサス· インスツルメンツおよびその代理人を完全に補償するものとし、 テキサス· インスツルメンツは一切の責任を拒否します。

テキサス· インスツルメンツの製品は、 テキサス· インスツルメンツの販売条件、または ti.com やかかる テキサス· インスツルメンツ製品の関連資料などのいずれかを通じて提供する適用可能な条項の下で提供されています。 テキサス· インスツルメンツがこれらのリソースを提供することは、適用される テキサス· インスツルメンツの保証または他の保証の放棄の拡大や変更を意味するものではありません。

お客様がいかなる追加条項または代替条項を提案した場合でも、 テキサス· インスツルメンツはそれらに異議を唱え、拒否します。

郵送先住所：Texas Instruments, Post Office Box 655303, Dallas, Texas 75265
Copyright © 2025, Texas Instruments Incorporated