SN74AHCT1G00 シングル 2 入力、正論理 NAND ゲート

1 特長

- 動作範囲：4.5V ~ 5.5V
- 最大 t_{pd}：7.1ns (5V 時)
- 低消費電力、最大 I_{CC} 10μA
- ±8mA の出力駆動能力 (5V 時)
- 入力は TTL 電圧互換
- JESD 17 準拠で 250mA 超のラッチアップ性能

2 アプリケーション

- IP 電話
- ノート PC
- プリンタ
- アクセス制御とセキュリティ
- 太陽光インバータ

3 概要

SN74AHCT1G00 デバイスは、ブール関数 $Y = \overline{A \times B}$、つまり $Y = \overline{A} + \overline{B}$ を正論理で実行します。

パッケージ情報

部品番号	パッケージ [1]	パッケージ・サイズ [2]
SN74AHCT1G00	DBV (SOT-23、5)	2.8mm × 2.8mm
	DCK (SC-70、5)	2.00mm × 1.25mm

(1) 利用可能なすべてのパッケージについては、データシートの末尾にある注文情報を参照してください。
(2) パッケージ・サイズ (長さ×幅) は公称値であり、該当する場合はピンも含まれます。

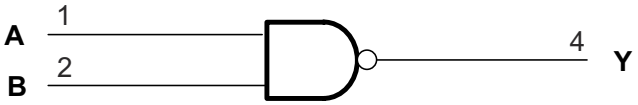

論理図 (正論理)

このリソースの元の言語は英語です。 翻訳は概要を便宜的に提供するもので、自動化ツール (機械翻訳) を使用していることがあり、TI では翻訳の正確性および妥当性につきましては一切保証いたしません。 実際の設計などの前には、ti.com で必ず最新の英語版をご参照くださいますようお願いいたします。

Table of Contents

1 特長.....1
2 アプリケーション.....1
3 概要.....1
4 Pin Configuration and Functions.....3
5 Specifications.....4
5.1 Absolute Maximum Ratings.....4
5.2 ESD Ratings.....4
5.3 Recommended Operating Conditions.....4
5.4 Thermal Information.....5
5.5 Electrical Characteristics.....5
5.6 Switching Characteristics.....5
5.7 Operating Characteristics.....5
5.8 Typical Characteristics.....6
6 Parameter Measurement Information.....7
7 Detailed Description.....8
7.1 Overview.....8
7.2 Functional Block Diagram.....8
7.3 Feature Description.....8
7.4 Device Functional Modes.....8
8 Application and Implementation.....9
8.1 Application Information.....9
8.2 Typical Application.....9
8.3 Detailed Design Procedure.....9
8.4 Application Curves.....10
9 Device and Documentation Support.....11
9.1 Documentation Support (Analog).....11
9.2 ドキュメントの更新通知を受け取る方法.....11
9.3 サポート・リソース.....11
9.4 Trademarks.....11
9.5 静電気放電に関する注意事項.....11
9.6 用語集.....11
10 Revision History.....11
11 Mechanical, Packaging, and Orderable Information.....12

Copyright © 2024 Texas Instruments Incorporated

4 Pin Configuration and Functions

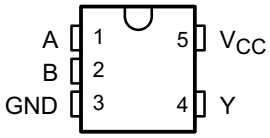

図 4-1. DBV or DCK Package 5-PIN SOT-23 OR SC-70 (Top View)

表 4-1. Pin Functions

PIN		TYPE	DESCRIPTION
NO.	NAME		
1	A	I	Input A
2	B	I	Input B
3	GND	—	Ground Pin
4	Y	O	Output Y
5	V_{CC}	—	Power Pin

5 Specifications

5.1 Absolute Maximum Ratings

over operating free-air temperature range (unless otherwise noted)[1]

			MIN	MAX	UNIT
V_{CC}	Supply voltage		–0.5	7	V
V_I	Input voltage[2]		–0.5	7	V
V_O	Output voltage[2]		–0.5	V_{CC} + 0.5	V
I_{IK}	Input clamp current	V_I < 0		–20	mA
I_{OK}	Output clamp current	V_O < 0 or V_O > V_{CC}	–20	20	mA
I_O	Continuous output current	V_O = 0 to V_{CC}	–25	25	mA
	Continuous current through V_{CC} or GND		–50	50	mA
T_{stg}	Storage temperature		–65	150	°C

(1) Stresses beyond those listed under *Absolute Maximum Ratings* may cause permanent damage to the device. These are stress ratings only, which do not imply functional operation of the device at these or any other conditions beyond those indicated under *Recommended Operating Conditions*. Exposure to absolute-maximum-rated conditions for extended periods may affect device reliability.
(2) The input and output voltage ratings may be exceeded if the input and output current ratings are observed.

5.2 ESD Ratings

			VALUE	UNIT
$V_{(ESD)}$	Electrostatic discharge	Human body model (HBM), per ANSI/ESDA/JEDEC JS-001[1]	±2000	V
		Charged-device model (CDM), per JEDEC specification JESD22-C101[2]	±1000	

(1) JEDEC document JEP155 states that 500-V HBM allows safe manufacturing with a standard ESD control process.
(2) JEDEC document JEP157 states that 250-V CDM allows safe manufacturing with a standard ESD control process.

5.3 Recommended Operating Conditions

over operating free-air temperature range (unless otherwise noted)[1]

		MIN	MAX	UNIT
V_{CC}	Supply voltage	4.5	5.5	V
V_{IH}	High-level input voltage	2		V
V_{IL}	Low-level Input voltage		0.8	V
V_I	Input voltage	0	5.5	V
V_O	Output voltage	0	V_{CC}	V
I_{OH}	High-level output current		–8	mA
I_{OL}	Low-level output current		8	mA
Δt/Δv	Input transition rise or fall rate		20	ns/V
T_A	Operating free-air temperature	–40	125	°C

(1) All unused inputs of the device must be held at V_{CC} or GND to ensure proper device operation. Refer to the TI application report, *Implications of Slow or Floating CMOS Inputs* (SCBA004).

Copyright © 2024 Texas Instruments Incorporated

5.4 Thermal Information

THERMAL METRIC[1]		SN74AHCT1G00		UNIT
		DBV (SOT-23)	DCK (SC-70)	
		5 PINS	5 PINS	
$R_{\theta JA}$	Junction-to-ambient thermal resistance	278	289.2	°C/W
$R_{\theta JC(top)}$	Junction-to-case (top) thermal resistance	180.5	205.8	
$R_{\theta JB}$	Junction-to-board thermal resistance	184.4	176.2	
ψ_{JT}	Junction-to-top characterization parameter	115.4	117.6	
ψ_{JB}	Junction-to-board characterization parameter	183.4	175.1	
$R_{\theta JC(bot)}$	Junction-to-case (bottom) thermal resistance	N/A	N/A	

(1) For more information about traditional and new thermal metrics, see the *IC Package Thermal Metrics* application report (SPRA953).

5.5 Electrical Characteristics

over operating free-air temperature range (unless otherwise noted)

PARAMETER	TEST CONDITIONS	V_{CC}	T_A = 25°C			–40°C to 85°C		–40°C to 125°C		UNIT
			MIN	TYP	MAX	MIN	MAX	MIN	MAX	
V_{OH}	I_{OH} = –50 µA	4.5 V	4.4	4.5		4.4		4.4		V
	I_{OH} = –8 mA		3.94			3.8		3.8		
V_{OL}	I_{OL} = 50 µA	4.5 V			0.1		0.1		0.1	V
	I_{OL} = 8 mA				0.36		0.44		0.44	
I_I	V_I = 5.5 V or GND	0 V to 5.5 V			±0.1		±1		±1	µA
I_{CC}	V_I = V_{CC} or GND, I_O = 0	5.5 V			1		10		10	µA
ΔI_{CC} [1]	One input at 3.4 V, Other inputs at V_{CC} or GND	5.5 V			1.35		1.5		1.5	mA
C_i	V_I = V_{CC} or GND	5 V		2	10		10		10	pF

(1) This is the increase in supply current for each input at one of the specified TTL voltage levels, rather than 0 V or V_{CC}.

5.6 Switching Characteristics

over recommended operating free-air temperature range, V_{CC} = 5 V ± 0.5 V (unless otherwise noted) (see Load Circuits and Voltage Waveforms)

PARAMETER	FROM (INPUT)	TO (OUTPUT)	LOAD CAPACITANCE	T_A = 25°C		–40°C to 85°C		–40°C to 125°C		UNIT
				TYP	MAX	MIN	MAX	MIN	MAX	
t_{PLH}	A or B	Y	C_L = 15 pF	5	6.2	1	7.1	1	8	ns
t_{PHL}				5	6.2	1	7.1	1	8	
t_{PLH}	A or B	Y	C_L = 15 pF	5.5	7.9	1	9	1	10	ns
t_{PHL}				5.5	7.9	1	9	1	10	

5.7 Operating Characteristics

V_{CC} = 5 V, T_A = 25°C

PARAMETER		TEST CONDITIONS		TYP	UNIT
C_{pd}	Power dissipation capacitance	No load,	f = 1 MHz	10.5	pF

5.8 Typical Characteristics

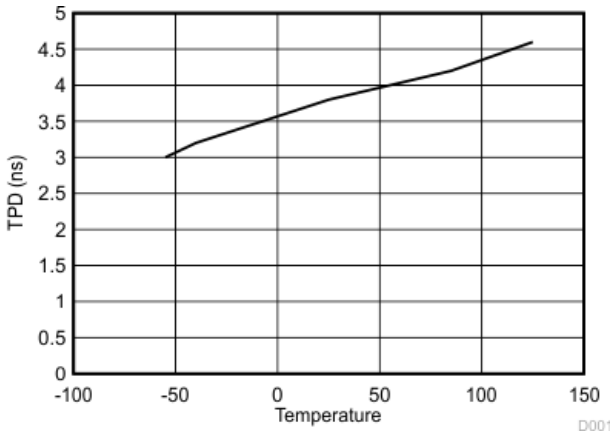

図 5-1. TPD vs Temperature

Copyright © 2024 Texas Instruments Incorporated

6 Parameter Measurement Information

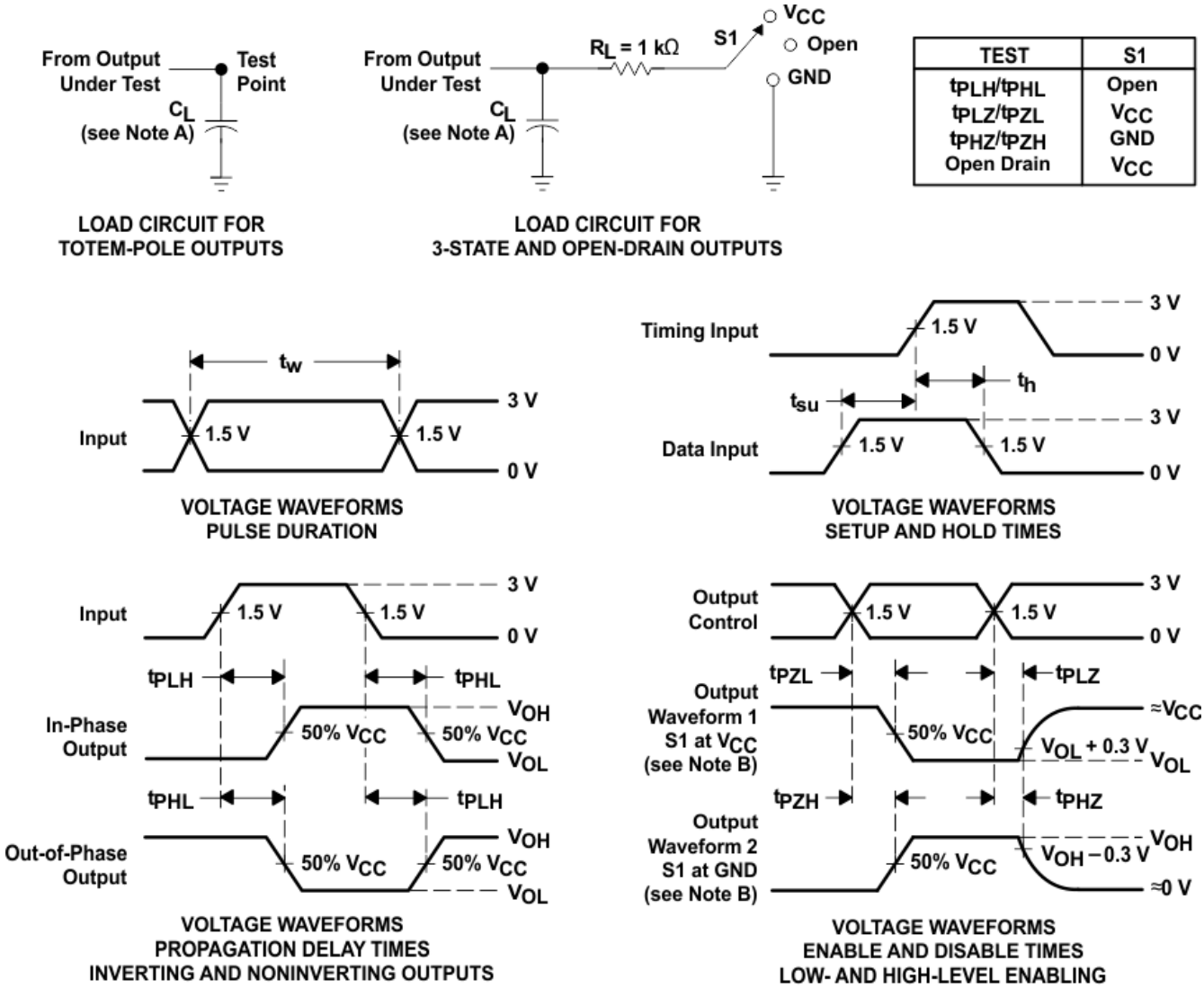

NOTES: A. C_L includes probe and jig capacitance.
B. Waveform 1 is for an output with internal conditions such that the output is low except when disabled by the output control. Waveform 2 is for an output with internal conditions such that the output is high except when disabled by the output control.
C. All input pulses are supplied by generators having the following characteristics: PRR ≤ 1 MHz, Z_O = 50 Ω, t_r ≤ 3 ns, t_f ≤ 3 ns.
D. The outputs are measured one at a time with one input transition per measurement.
E. All parameters and waveforms are not applicable to all devices.

図 6-1. Load Circuits and Voltage Waveforms

7 Detailed Description

7.1 Overview

The SN74AHCT1G00 device performs the Boolean function $Y = \overline{A \times B}$ or $Y = \overline{A} + \overline{B}$ in positive logic.

The device has TTL inputs that allow up translation from 3.3 V to 5 V. The inputs are high impedance when V_{CC} = 0 V.

7.2 Functional Block Diagram

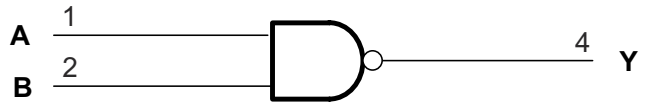

図 7-1. Logic Diagram (Positive Logic)

7.3 Feature Description

The device is ideal for operating in a 5-V logic system. The low propagation delay allows fast switching and higher speeds of operation. In addition, the low power consumption makes this device a good choice for portable and battery power-sensitive applications.

7.4 Device Functional Modes

表 7-1. Function Table

INPUTS		OUTPUT
A	B	Y
H	H	L
L	X	H
X	L	H

Copyright © 2024 Texas Instruments Incorporated

8 Application and Implementation

注

以下のアプリケーション情報は、TI の製品仕様に含まれるものではなく、TI ではその正確性または完全性を保証いたしません。個々の目的に対する製品の適合性については、お客様の責任で判断していただくことになります。お客様は自身の設計実装を検証しテストすることで、システムの機能を確認する必要があります。

8.1 Application Information

The SN74AHCT1G00 is a low drive CMOS device that can be used for a multitude of bus interface type applications where output ringing is a concern. The low drive and slow edge rates will minimize overshoot and undershoot on the outputs. The TTL inputs can except voltages down to 3.3 V and translate up to 5 V.

8.2 Typical Application

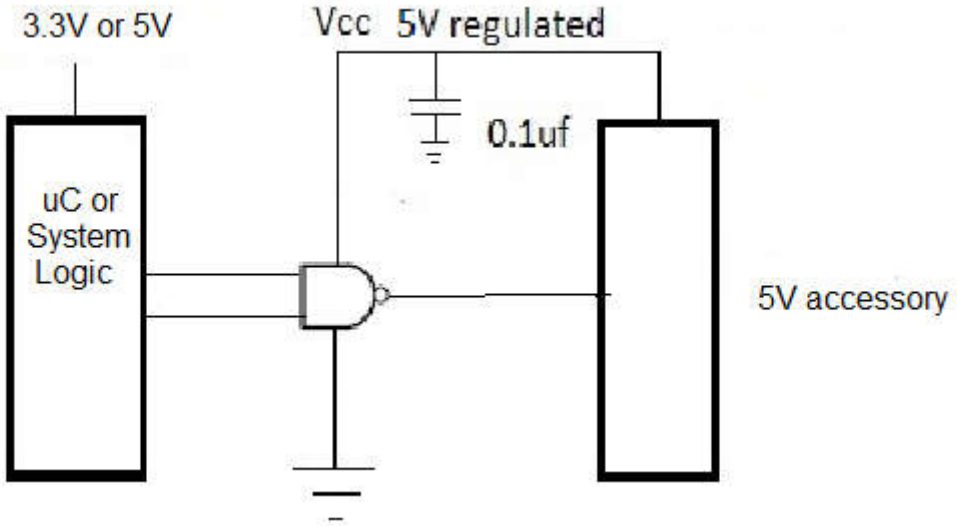

図 8-1. Typical Application Schematic

8.2.1 Design Requirements

This device uses CMOS technology and has balanced output drive. Take care to avoid bus contention because it can drive currents that would exceed maximum limits. The high drive will also create fast edges into light loads so consider routing and load conditions to prevent ringing.

8.3 Detailed Design Procedure

- Recommended input conditions:
  - Specified high and low levels. See (V_{IH} and V_{IL}) in *セクション 5.3*.
  - Inputs are overvoltage tolerant allowing them to go as high as 5.5 V at any valid V_{CC}.
- Recommended output conditions:
  - Load currents should not exceed 25 mA per output and 50 mA total for the part.
  - Outputs should not be pulled above V_{CC}.

8.4 Application Curves

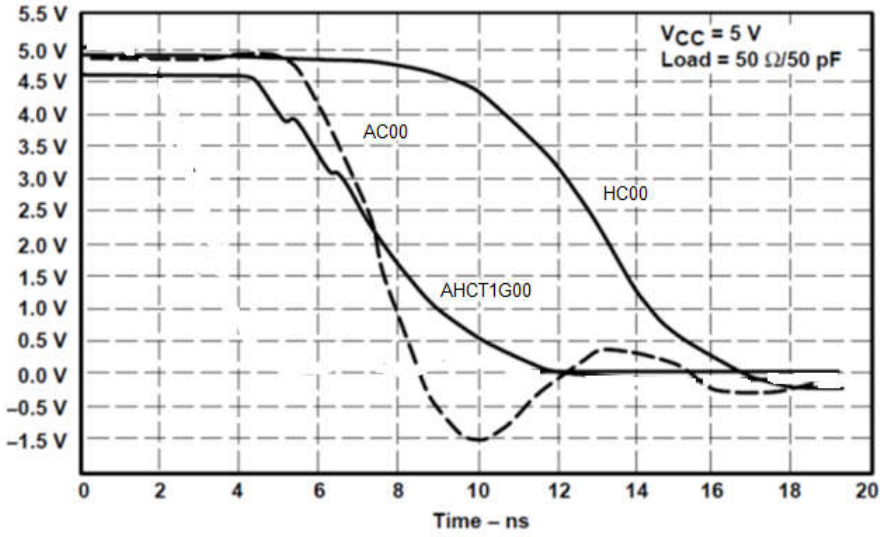

図 8-2. Switching Characteristics Comparison

Copyright © 2024 Texas Instruments Incorporated

9 Device and Documentation Support

9.1 Documentation Support (Analog)

9.1.1 Related Documentation

For related documentation, see the following:

- Texas Instruments, *CMOS Power Consumption and Cpd Calculation* application note
- Texas Instruments, *Designing With Logic* application note
- Texas Instruments, *Thermal Characteristics of Standard Linear and Logic (SLL) Packages and Devices* application note
- Texas Instruments, *Implications of Slow or Floating CMOS Inputs* application note

9.2 ドキュメントの更新通知を受け取る方法

ドキュメントの更新についての通知を受け取るには、ti.com のデバイス製品フォルダを開いてください。「更新の通知を受け取る」をクリックして登録すると、変更されたすべての製品情報に関するダイジェストを毎週受け取れます。変更の詳細については、修正されたドキュメントに含まれている改訂履歴をご覧ください。

9.3 サポート・リソース

TI E2E™ サポート・フォーラムは、エンジニアが検証済みの回答と設計に関するヒントをエキスパートから迅速かつ直接得ることができる場所です。既存の回答を検索したり、独自の質問をしたりすることで、設計で必要な支援を迅速に得ることができます。

リンクされているコンテンツは、該当する貢献者により、現状のまま提供されるものです。これらは TI の仕様を構成するものではなく、必ずしも TI の見解を反映したものではありません。TI の使用条件を参照してください。

9.4 Trademarks

TI E2E™ is a trademark of Texas Instruments.
すべての商標は、それぞれの所有者に帰属します。

9.5 静電気放電に関する注意事項

この IC は、ESD によって破損する可能性があります。テキサス・インスツルメンツは、IC を取り扱う際には常に適切な注意を払うことを推奨します。正しい取り扱いおよび設置手順に従わない場合、デバイスを破損するおそれがあります。

ESD による破損は、わずかな性能低下からデバイスの完全な故障まで多岐にわたります。精密な IC の場合、パラメータがわずかに変化するだけで公表されている仕様から外れる可能性があるため、破損が発生しやすくなっています。

9.6 用語集

テキサス・インスツルメンツ用語集　この用語集には、用語や略語の一覧および定義が記載されています。

10 Revision History

Changes from Revision O (October 2023) to Revision P (February 2024) — **Page**

- Updated thermal values for DBV package from RθJA = 208.2 to 278, RθJC(top) = 76.1 to 180.5, RθJB = 52.5 to 184.4, ΨJT = 4 to 115.4, ΨJB = 51.8 to 183.4, RθJC(bot) = N/A, all values in °C/W 5

Changes from Revision N (March 2015) to Revision O (October 2023) — **Page**

- 「パッケージ情報」表にパッケージ・サイズを追加 1
- Updated thermal values for DCK package from RθJA = 287.6 to 289.2, RθJC(top) = 97.7 to 205.8, RθJB = 65 to 176.2, ΨJT = 2 to 117.6, ΨJB = 64.2 to 175.1, RθJC(bot) = N/A, all values in °C/W 5

11 Mechanical, Packaging, and Orderable Information

The following pages include mechanical, packaging, and orderable information. This information is the most current data available for the designated devices. This data is subject to change without notice and revision of this document. For browser-based versions of this data sheet, refer to the left-hand navigation.

Copyright © 2024 Texas Instruments Incorporated

PACKAGING INFORMATION

Orderable part number	Status (1)	Material type (2)	Package | Pins	Package qty | Carrier	RoHS (3)	Lead finish/ Ball material (4)	MSL rating/ Peak reflow (5)	Op temp (°C)	Part marking (6)
74AHCT1G00DBVRG4	Active	Production	SOT-23 (DBV) | 5	3000 | LARGE T&R	Yes	NIPDAU	Level-1-260C-UNLIM	-40 to 125	B00G
74AHCT1G00DBVRG4.A	Active	Production	SOT-23 (DBV) | 5	3000 | LARGE T&R	Yes	NIPDAU	Level-1-260C-UNLIM	-40 to 125	B00G
74AHCT1G00DBVTG4	Obsolete	Production	SOT-23 (DBV) | 5	-	-	Call TI	Call TI	-40 to 125	B00G
74AHCT1G00DCKRE4	Active	Production	SC70 (DCK) | 5	3000 | LARGE T&R	Yes	NIPDAU	Level-1-260C-UNLIM	-40 to 125	BA3
74AHCT1G00DCKRG4	Active	Production	SC70 (DCK) | 5	3000 | LARGE T&R	Yes	NIPDAU	Level-1-260C-UNLIM	-40 to 125	BA3
74AHCT1G00DCKRG4.A	Active	Production	SC70 (DCK) | 5	3000 | LARGE T&R	Yes	NIPDAU	Level-1-260C-UNLIM	-40 to 125	BA3
74AHCT1G00DCKTG4	Obsolete	Production	SC70 (DCK) | 5	-	-	Call TI	Call TI	-40 to 125	BA3
SN74AHCT1G00DBVR	Active	Production	SOT-23 (DBV) | 5	3000 | LARGE T&R	Yes	SN	Level-1-260C-UNLIM	-40 to 125	(37UH, 3C5F, B003, B00G, B00J, B 00S)
SN74AHCT1G00DBVR.A	Active	Production	SOT-23 (DBV) | 5	3000 | LARGE T&R	Yes	SN	Level-1-260C-UNLIM	-40 to 125	(37UH, 3C5F, B003, B00G, B00J, B 00S)
SN74AHCT1G00DBVT	Obsolete	Production	SOT-23 (DBV) | 5	-	-	Call TI	Call TI	-40 to 125	(B003, B00G, B00J, B00S)
SN74AHCT1G00DCK3	Active	Production	SC70 (DCK) | 5	3000 | LARGE T&R	Yes	SNBI	Level-1-260C-UNLIM	-40 to 85	BAY
SN74AHCT1G00DCK3.A	Active	Production	SC70 (DCK) | 5	3000 | LARGE T&R	Yes	SNBI	Level-1-260C-UNLIM	-40 to 85	BAY
SN74AHCT1G00DCKR	Active	Production	SC70 (DCK) | 5	3000 | LARGE T&R	Yes	SN	Level-1-260C-UNLIM	-40 to 125	(1QO, BA3, BAG, BA J, BAS)
SN74AHCT1G00DCKR.A	Active	Production	SC70 (DCK) | 5	3000 | LARGE T&R	Yes	SN	Level-1-260C-UNLIM	-40 to 125	(1QO, BA3, BAG, BA J, BAS)
SN74AHCT1G00DCKT	Obsolete	Production	SC70 (DCK) | 5	-	-	Call TI	Call TI	-40 to 125	(BA3, BAG, BAJ, BA S)

(1) **Status:** For more details on status, see our product life cycle.

(2) **Material type:** When designated, preproduction parts are prototypes/experimental devices, and are not yet approved or released for full production. Testing and final process, including without limitation quality assurance, reliability performance testing, and/or process qualification, may not yet be complete, and this item is subject to further changes or possible discontinuation. If available for ordering, purchases will be subject to an additional waiver at checkout, and are intended for early internal evaluation purposes only. These items are sold without warranties of any kind.

(3) **RoHS values:** Yes, No, RoHS Exempt. See the TI RoHS Statement for additional information and value definition.

(4) **Lead finish/Ball material:** Parts may have multiple material finish options. Finish options are separated by a vertical ruled line. Lead finish/Ball material values may wrap to two lines if the finish value exceeds the maximum column width.

(5) **MSL rating/Peak reflow:** The moisture sensitivity level ratings and peak solder (reflow) temperatures. In the event that a part has multiple moisture sensitivity ratings, only the lowest level per JEDEC standards is shown. Refer to the shipping label for the actual reflow temperature that will be used to mount the part to the printed circuit board.

(6) **Part marking:** There may be an additional marking, which relates to the logo, the lot trace code information, or the environmental category of the part.

Multiple part markings will be inside parentheses. Only one part marking contained in parentheses and separated by a "~" will appear on a part. If a line is indented then it is a continuation of the previous line and the two combined represent the entire part marking for that device.

Important Information and Disclaimer: The information provided on this page represents TI's knowledge and belief as of the date that it is provided. TI bases its knowledge and belief on information provided by third parties, and makes no representation or warranty as to the accuracy of such information. Efforts are underway to better integrate information from third parties. TI has taken and continues to take reasonable steps to provide representative and accurate information but may not have conducted destructive testing or chemical analysis on incoming materials and chemicals. TI and TI suppliers consider certain information to be proprietary, and thus CAS numbers and other limited information may not be available for release.

In no event shall TI's liability arising out of such information exceed the total purchase price of the TI part(s) at issue in this document sold by TI to Customer on an annual basis.

OTHER QUALIFIED VERSIONS OF SN74AHCT1G00 :

- Automotive : SN74AHCT1G00-Q1

NOTE: Qualified Version Definitions:

- Automotive - Q100 devices qualified for high-reliability automotive applications targeting zero defects

TAPE AND REEL INFORMATION

REEL DIMENSIONS

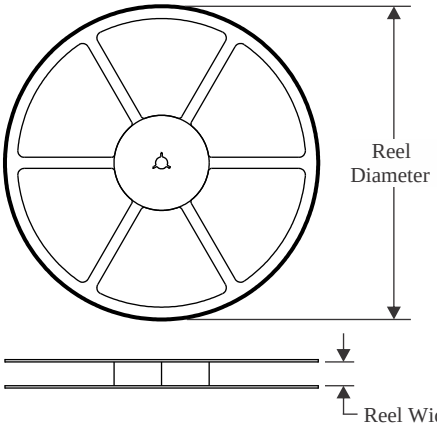

TAPE DIMENSIONS

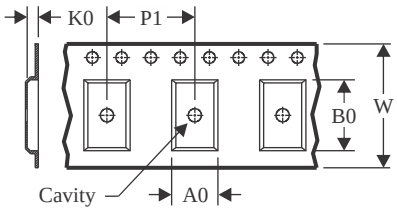

A0	Dimension designed to accommodate the component width
B0	Dimension designed to accommodate the component length
K0	Dimension designed to accommodate the component thickness
W	Overall width of the carrier tape
P1	Pitch between successive cavity centers

QUADRANT ASSIGNMENTS FOR PIN 1 ORIENTATION IN TAPE

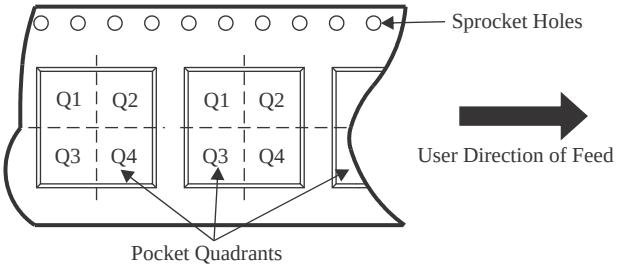

*All dimensions are nominal

Device	Package Type	Package Drawing	Pins	SPQ	Reel Diameter (mm)	Reel Width W1 (mm)	A0 (mm)	B0 (mm)	K0 (mm)	P1 (mm)	W (mm)	Pin1 Quadrant
74AHCT1G00DBVRG4	SOT-23	DBV	5	3000	178.0	9.0	3.23	3.17	1.37	4.0	8.0	Q3
74AHCT1G00DCKRG4	SC70	DCK	5	3000	178.0	9.2	2.4	2.4	1.22	4.0	8.0	Q3
SN74AHCT1G00DBVR	SOT-23	DBV	5	3000	180.0	8.4	3.2	3.2	1.4	4.0	8.0	Q3
SN74AHCT1G00DCKR	SC70	DCK	5	3000	180.0	8.4	2.3	2.5	1.2	4.0	8.0	Q3

TAPE AND REEL BOX DIMENSIONS

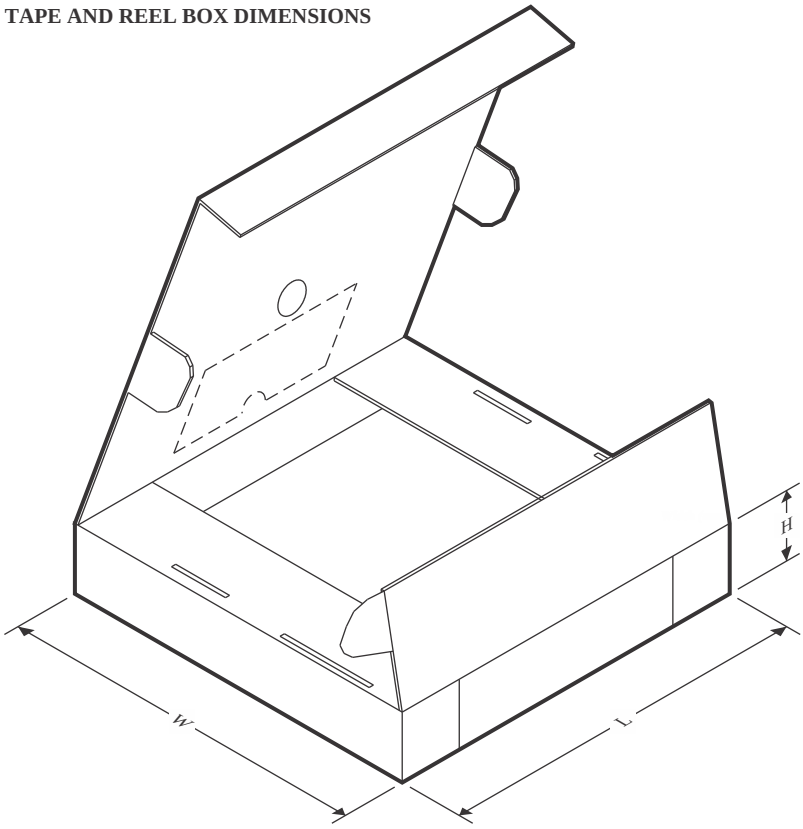

*All dimensions are nominal

Device	Package Type	Package Drawing	Pins	SPQ	Length (mm)	Width (mm)	Height (mm)
74AHCT1G00DBVRG4	SOT-23	DBV	5	3000	180.0	180.0	18.0
74AHCT1G00DCKRG4	SC70	DCK	5	3000	180.0	180.0	18.0
SN74AHCT1G00DBVR	SOT-23	DBV	5	3000	210.0	185.0	35.0
SN74AHCT1G00DCKR	SC70	DCK	5	3000	210.0	185.0	35.0

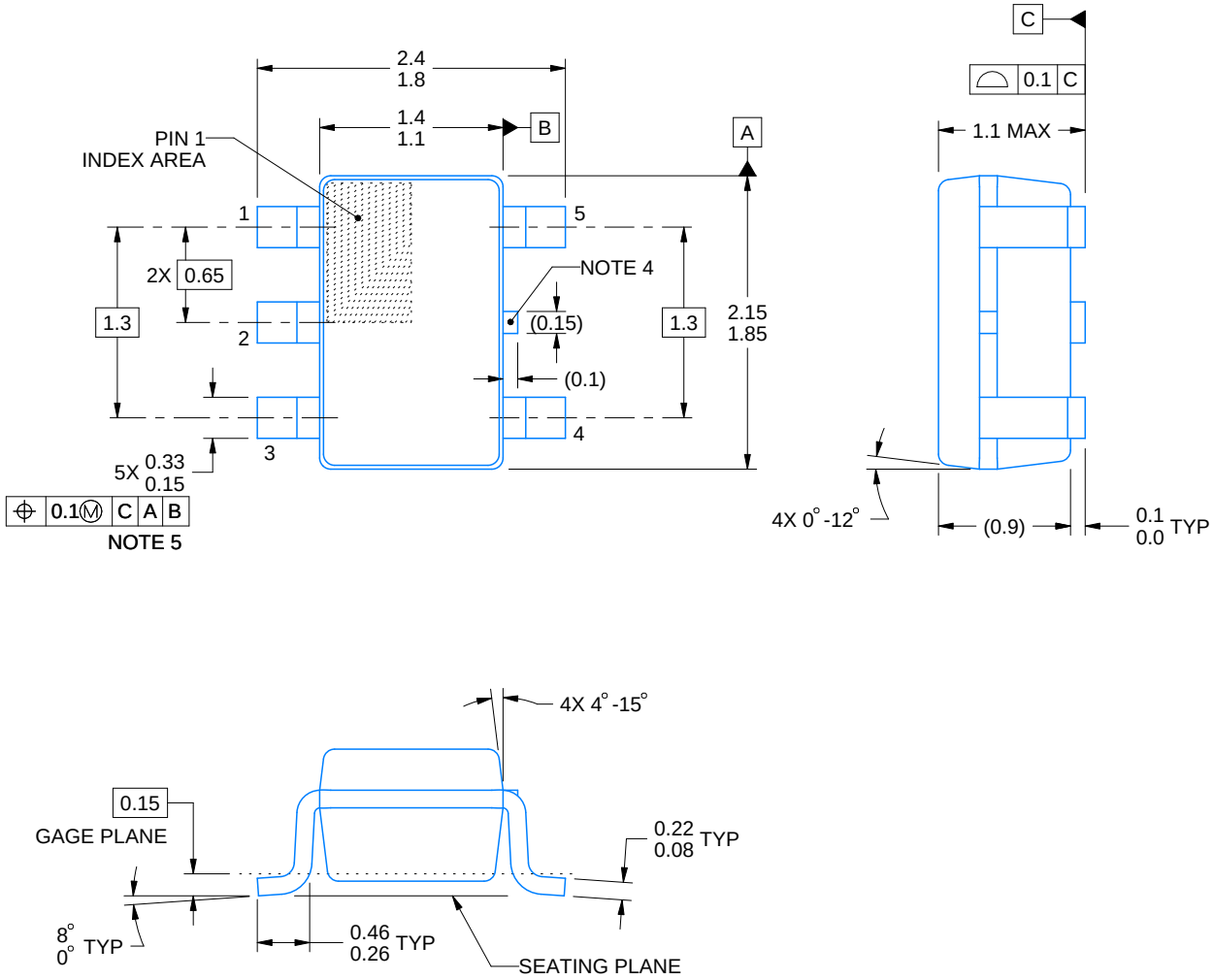

NOTES:

1. All linear dimensions are in millimeters. Any dimensions in parenthesis are for reference only. Dimensioning and tolerancing per ASME Y14.5M.
2. This drawing is subject to change without notice.
3. Refernce JEDEC MO-203.
4. Support pin may differ or may not be present.
5. Lead width does not comply with JEDEC.
6. Body dimensions do not include mold flash, protrusions, or gate burrs. Mold flash, protrusions, or gate burrs shall not exceed 0.25mm per side

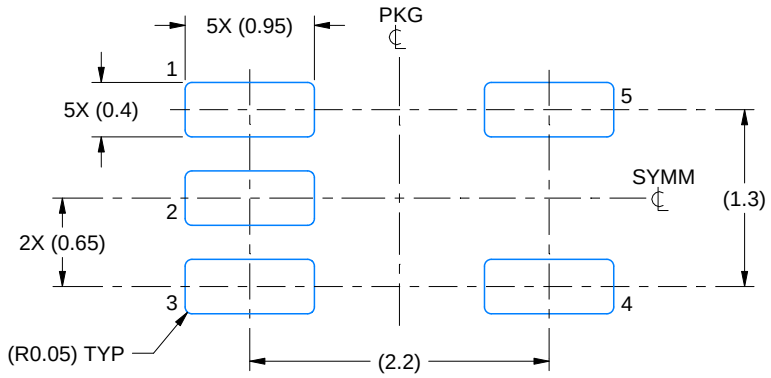

LAND PATTERN EXAMPLE
EXPOSED METAL SHOWN
SCALE:18X

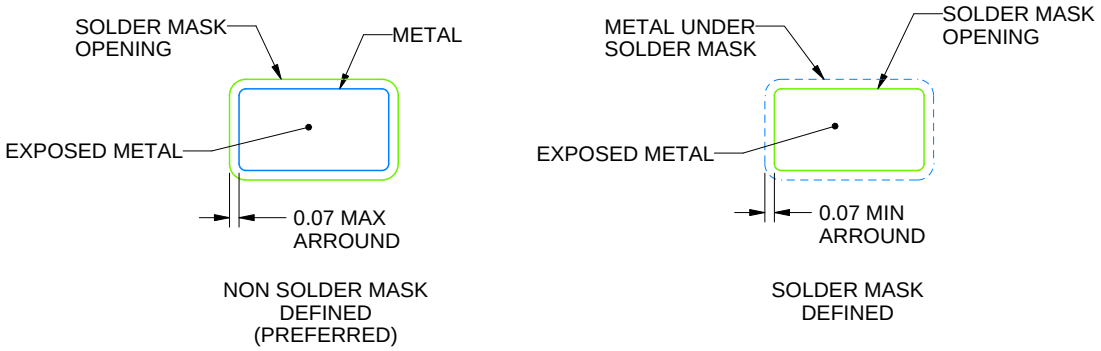

SOLDER MASK DETAILS

4214834/G 11/2024

NOTES: (continued)

7. Publication IPC-7351 may have alternate designs.
8. Solder mask tolerances between and around signal pads can vary based on board fabrication site.

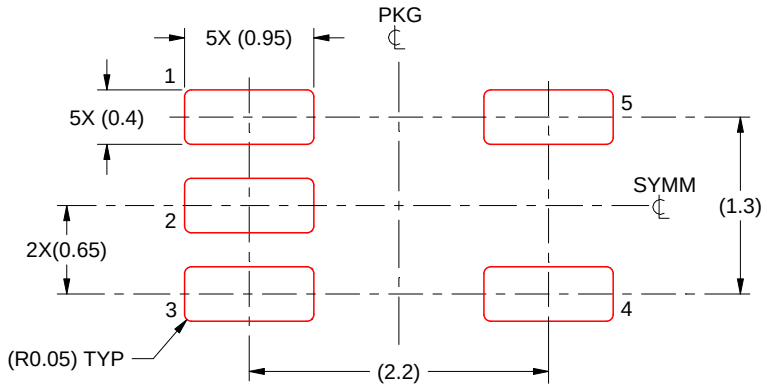

SOLDER PASTE EXAMPLE
BASED ON 0.125 THICK STENCIL
SCALE:18X

4214834/G 11/2024

NOTES: (continued)

9. Laser cutting apertures with trapezoidal walls and rounded corners may offer better paste release. IPC-7525 may have alternate design recommendations.
10. Board assembly site may have different recommendations for stencil design.

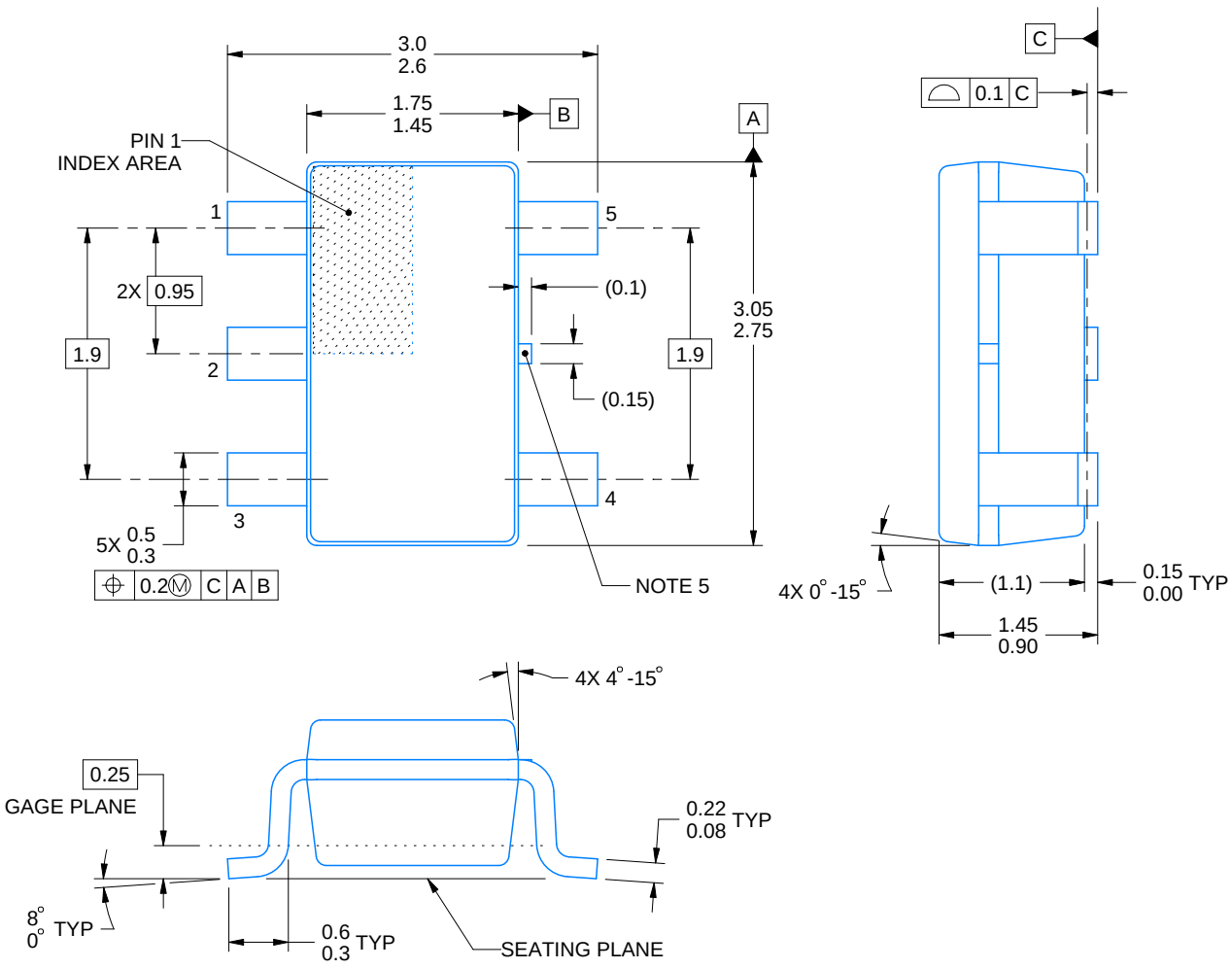

4214839/K 08/2024

NOTES:

1. All linear dimensions are in millimeters. Any dimensions in parenthesis are for reference only. Dimensioning and tolerancing per ASME Y14.5M.
2. This drawing is subject to change without notice.
3. Refernce JEDEC MO-178.
4. Body dimensions do not include mold flash, protrusions, or gate burrs. Mold flash, protrusions, or gate burrs shall not exceed 0.25 mm per side.
5. Support pin may differ or may not be present.

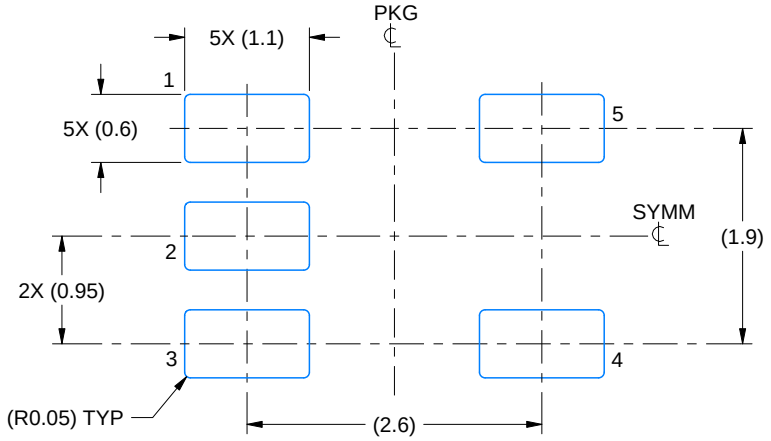

LAND PATTERN EXAMPLE
EXPOSED METAL SHOWN
SCALE:15X

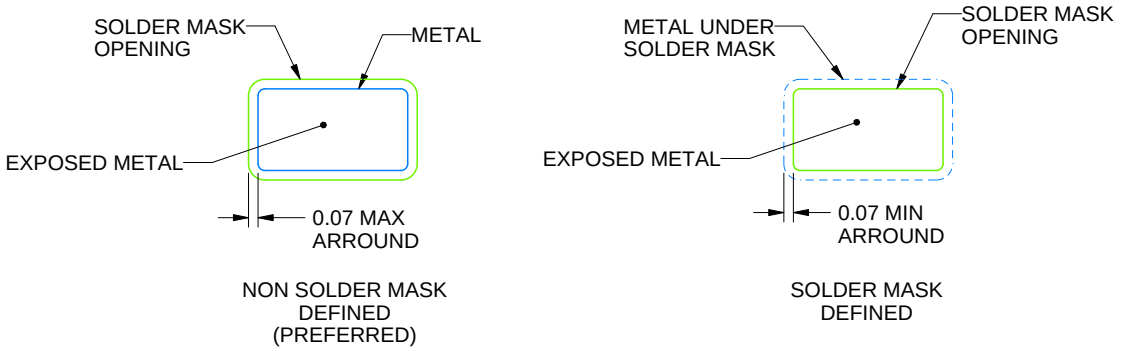

SOLDER MASK DETAILS

4214839/K 08/2024

NOTES: (continued)

6. Publication IPC-7351 may have alternate designs.
7. Solder mask tolerances between and around signal pads can vary based on board fabrication site.

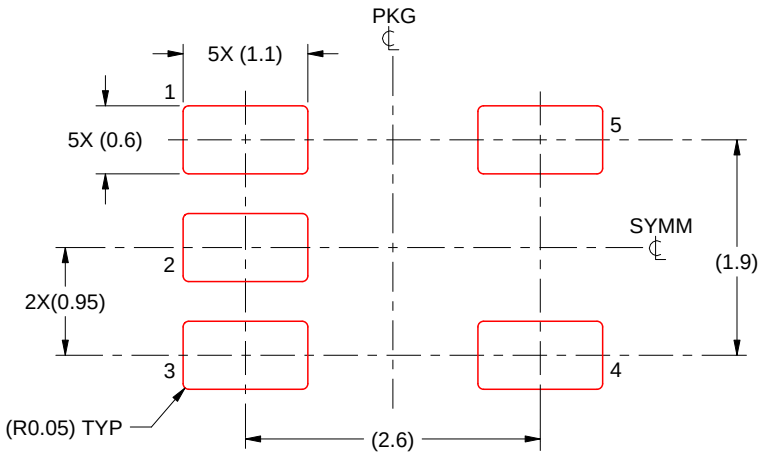

SOLDER PASTE EXAMPLE
BASED ON 0.125 mm THICK STENCIL
SCALE:15X

4214839/K 08/2024

NOTES: (continued)

8. Laser cutting apertures with trapezoidal walls and rounded corners may offer better paste release. IPC-7525 may have alternate design recommendations.
9. Board assembly site may have different recommendations for stencil design.

重要なお知らせと免責事項

テキサス· インスツルメンツは、技術データと信頼性データ (データシートを含みます)、設計リソース (リファレンス デザインを含みます)、アプリケーションや設計に関する各種アドバイス、Web ツール、安全性情報、その他のリソースを、欠陥が存在する可能性のある「現状のまま」提供しており、商品性および特定目的に対する適合性の黙示保証、第三者の知的財産権の非侵害保証を含むいかなる保証も、明示的または黙示的にかかわらず拒否します。

これらのリソースは、 テキサス· インスツルメンツ製品を使用する設計の経験を積んだ開発者への提供を意図したものです。(1) お客様のアプリケーションに適した テキサス· インスツルメンツ製品の選定、(2) お客様のアプリケーションの設計、検証、試験、(3) お客様のアプリケーションに該当する各種規格や、その他のあらゆる安全性、セキュリティ、規制、または他の要件への確実な適合に関する責任を、お客様のみが単独で負うものとします。

上記の各種リソースは、予告なく変更される可能性があります。これらのリソースは、リソースで説明されている テキサス· インスツルメンツ製品を使用するアプリケーションの開発の目的でのみ、 テキサス· インスツルメンツはその使用をお客様に許諾します。これらのリソースに関して、他の目的で複製することや掲載することは禁止されています。 テキサス· インスツルメンツや第三者の知的財産権のライセンスが付与されている訳ではありません。お客様は、これらのリソースを自身で使用した結果発生するあらゆる申し立て、損害、費用、損失、責任について、 テキサス· インスツルメンツおよびその代理人を完全に補償するものとし、 テキサス· インスツルメンツは一切の責任を拒否します。

テキサス· インスツルメンツの製品は、 テキサス· インスツルメンツの販売条件、または ti.com やかかる テキサス· インスツルメンツ製品の関連資料などのいずれかを通じて提供する適用可能な条項の下で提供されています。 テキサス· インスツルメンツがこれらのリソースを提供することは、適用される テキサス· インスツルメンツの保証または他の保証の放棄の拡大や変更を意味するものではありません。

お客様がいかなる追加条項または代替条項を提案した場合でも、 テキサス· インスツルメンツはそれらに異議を唱え、拒否します。

郵送先住所：Texas Instruments, Post Office Box 655303, Dallas, Texas 75265
Copyright © 2025, Texas Instruments Incorporated