- **Package Options Include Plastic "Small Outline" Packages, Ceramic Chip Carriers and Flat Packages, and Plastic and Ceramic DIPs**
- **Dependable Texas Instruments Quality and Reliability**

description

These devices contain three independent 3-input NAND gates.

The SN5410, SN54LS10, and SN54S10 are characterized for operation over the full military temperature range of −55°C to 125°C. The SN7410, SN74LS10, and SN74S10 are characterized for operation from 0°C to 70°C.

FUNCTION TABLE (each gate)

INPUTS			OUTPUT
A	B	C	Y
H	H	H	L
L	X	X	H
X	L	X	H
X	X	L	H

logic symbol†

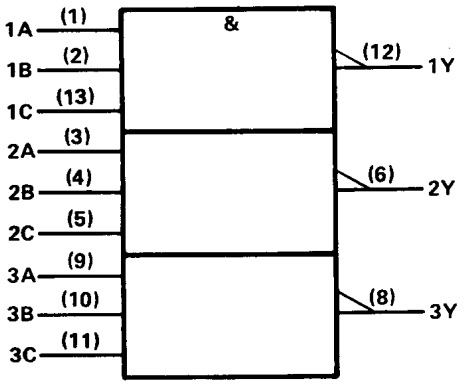

†This symbol is in accordance with ANSI/IEEE Std. 91-1984 and IEC Publication 617-12.
Pin numbers shown are for D, J, and N packages.

positive logic

$$Y = \overline{A \cdot B \cdot C} \text{ or } Y = \overline{A} + \overline{B} + \overline{C}$$

SN5410 . . . J PACKAGE
SN54LS10, SN54S10 . . . J OR W PACKAGE
SN7410 . . . N PACKAGE
SN74LS10, SN74S10 . . . D OR N PACKAGE
(TOP VIEW)

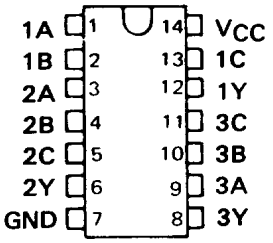

SN5410 . . . W PACKAGE
(TOP VIEW)

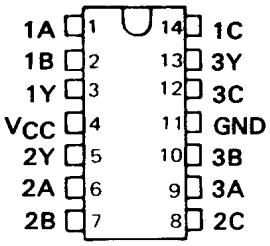

SN54LS10, SN54S10 . . . FK PACKAGE
(TOP VIEW)

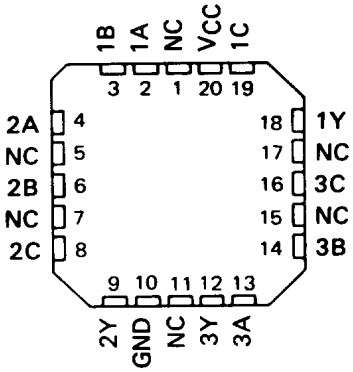

NC - No internal connection

logic diagram (positive logic)

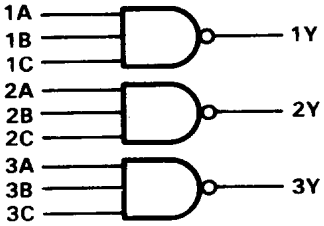

PRODUCTION DATA information is current as of publication date. Products conform to specifications per the terms of Texas Instruments standard warranty. Production processing does not necessarily include testing of all parameters.

Copyright © 2003, Texas Instruments Incorporated

schematics (each gate)

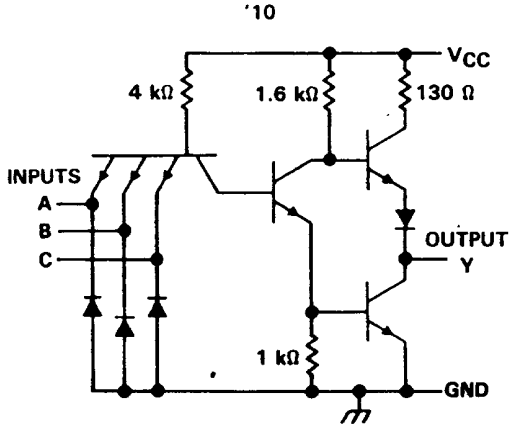

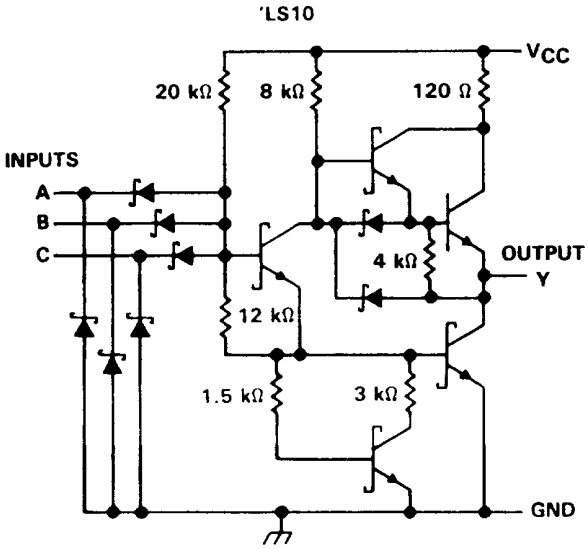

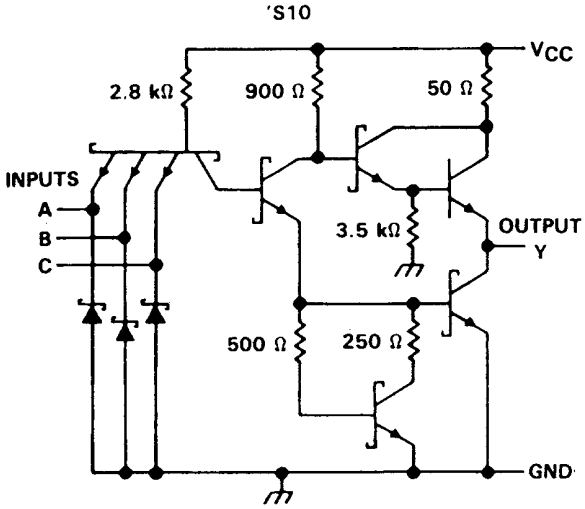

Resistor values shown are nominal.

absolute maximum ratings over operating free-air temperature range (unless otherwise noted)

Supply voltage, V_{CC} (see Note 1)		7 V
Input voltage: '10, 'S10		5.5 V
'LS10		7 V
Operating free-air temperature range:	SN54'	−55°C to 125°C
	SN74'	0°C to 70°C
Storage temperature range		−65°C to 150°C

NOTE 1: Voltage values are with respect to network ground terminal.

recommended operating conditions

	SN5410			SN7410			UNIT
	MIN	NOM	MAX	MIN	NOM	MAX	
V_{CC} Supply voltage	4.5	5	5.5	4.75	5	5.25	V
V_{IH} High-level input voltage	2			2			V
V_{IL} Low-level input voltage			0.8			0.8	V
I_{OH} High-level output current			– 0.4			– 0.4	mA
I_{OL} Low-level output current			16			16	mA
T_A Operating free-air temperature	– 55		125	0		70	°C

electrical characteristics over recommended operating free-air temperature range (unless otherwise noted)

PARAMETER	TEST CONDITIONS †	SN5410			SN7410			UNIT
		MIN	TYP‡	MAX	MIN	TYP‡	MAX	
V_{IK}	V_{CC} = MIN, I_I = – 12 mA			– 1.5			– 1.5	V
V_{OH}	V_{CC} = MIN, V_{IL} = 0.8 V, I_{OH} = – 0.4 mA	2.4	3.4		2.4	3.4		V
V_{OL}	V_{CC} = MIN, V_{IH} = 2 V, I_{OL} = 16 mA		0.2	0.4		0.2	0.4	V
I_I	V_{CC} = MAX, V_I = 5.5 V			1			1	mA
I_{IH}	V_{CC} = MAX, V_I = 2.4 V			40			40	μA
I_{IL}	V_{CC} = MAX, V_I = 0.4 V			– 1.6			– 1.6	mA
I_{OS}§	V_{CC} = MAX	– 20		– 55	– 18		– 55	mA
I_{CCH}	V_{CC} = MAX, V_I = 0 V		3	6		3	6	mA
I_{CCL}	V_{CC} = MAX, V_I = 4.5 V		9	16.5		9	16.5	mA

† For conditions shown as MIN or MAX, use the appropriate value specified under recommended operating conditions.
‡ All typical values are at V_{CC} = 5 V, T_A = 25°C.
§ Not more than one output should be shorted at a time.

switching characteristics, V_{CC} = 5 V, T_A = 25°C (see note 2)

PARAMETER	FROM (INPUT)	TO (OUTPUT)	TEST CONDITIONS	MIN	TYP	MAX	UNIT
t_{PLH}	A, B or C	Y	R_L = 400 Ω, C_L = 15 pF		11	22	ns
t_{PHL}					7	15	ns

NOTE 2: Load circuits and voltage waveforms are shown in Section 1.

recommended operating conditions

	SN54LS10			SN74LS10			UNIT
	MIN	NOM	MAX	MIN	NOM	MAX	
V_{CC} Supply voltage	4.5	5	5.5	4.75	5	5.25	V
V_{IH} High-level input voltage	2			2			V
V_{IL} Low-level input voltage			0.7			0.8	V
I_{OH} High-level output current			– 0.4			– 0.4	mA
I_{OL} Low-level output current			4			8	mA
T_A Operating free-air temperature	– 55		125	0		70	°C

electrical characteristics over recommended operating free-air temperature range (unless otherwise noted)

PARAMETER	TEST CONDITIONS †			SN54LS10			SN74LS10			UNIT
				MIN	TYP‡	MAX	MIN	TYP‡	MAX	
V_{IK}	V_{CC} = MIN,	I_I = – 18 mA				– 1.5			– 1.5	V
V_{OH}	V_{CC} = MIN,	V_{IL} = MAX,	I_{OH} = – 0.4 mA	2.5	3.4		2.7	3.4		V
V_{OL}	V_{CC} = MIN,	V_{IH} = 2 V,	I_{OL} = 4 mA		0.25	0.4			0.4	V
	V_{CC} = MIN,	V_{IH} = 2 V,	I_{OL} = 8 mA					0.25	0.5	
I_I	V_{CC} = MAX,	V_I = 7 V				0.1			0.1	mA
I_{IH}	V_{CC} = MAX,	V_I = 2.7 V				20			20	μA
I_{IL}	V_{CC} = MAX,	V_I = 0.4 V				– 0.4			– 0.4	mA
I_{OS}§	V_{CC} = MAX			– 20		– 100	– 20		– 100	mA
I_{CCH}	V_{CC} = MAX,	V_I = 0 V			0.6	1.2		0.6	1.2	mA
I_{CCL}	V_{CC} = MAX,	V_I = 4.5 V			1.8	3.3		1.8	3.3	mA

† For conditions shown as MIN or MAX, use the appropriate value specified under recommended operating conditions.
‡ All typical values are at V_{CC} = 5 V, T_A = 25°C.
§ Not more than one output should be shorted at a time, and the duration of the short-circuit should not exceed one second.

switching characteristics, V_{CC} = 5 V, T_A = 25°C (see note 2)

PARAMETER	FROM (INPUT)	TO (OUTPUT)	TEST CONDITIONS		MIN	TYP	MAX	UNIT
t_{PLH}	A, B or C	Y	R_L = 2 kΩ,	C_L = 15 pF		9	15	ns
t_{PHL}						10	15	ns

NOTE 2: Load circuits and voltage waveforms are shown in Section 1.

recommended operating conditions

		SN54S10			SN74S10			UNIT
		MIN	NOM	MAX	MIN	NOM	MAX	
V_{CC}	Supply voltage	4.5	5	5.5	4.75	5	5.25	V
V_{IH}	High-level input voltage	2			2			V
V_{IL}	Low-level input voltage			0.8			0.8	V
I_{OH}	High-level output current			– 1			– 1	mA
I_{OL}	Low-level output current			20			20	mA
T_A	Operating free-air temperature	– 55		125	0		70	°C

electrical characteristics over recommended operating free-air temperature range (unless otherwise noted)

PARAMETER	TEST CONDITIONS †			SN54S10			SN74S10			UNIT
				MIN	TYP‡	MAX	MIN	TYP‡	MAX	
V_{IK}	V_{CC} = MIN,	I_I = –18 mA				–1.2			–1.2	V
V_{OH}	V_{CC} = MIN,	V_{IL} = 0.8 V,	I_{OH} = – 1 mA	2.5	3.4		2.7	3.4		V
V_{OL}	V_{CC} = MIN,	V_{IH} = 2 V,	I_{OL} = 20 mA			0.5			0.5	V
I_I	V_{CC} = MAX,	V_I = 5.5 V				1			1	mA
I_{IH}	V_{CC} = MAX,	V_I = 2.7 V				50			50	μA
I_{IL}	V_{CC} = MAX,	V_I = 0.5 V				–2			–2	mA
I_{OS}§	V_{CC} = MAX			–40		–100	–40		–100	mA
I_{CCH}	V_{CC} = MAX,	V_I = 0 V			7.5	12		7.5	12	mA
I_{CCL}	V_{CC} = MAX,	V_I = 4.5 V			15	27		15	27	mA

† For conditions shown as MIN or MAX, use the appropriate value specified under recommended operating conditions.
‡ All typical values are at V_{CC} = 5 V, T_A = 25°C.
§ Not more than one output should be shorted at a time, and the duration of the short-circuit should not exceed one second.

switching characteristics, V_{CC} = 5 V, T_A = 25°C (see note 2)

PARAMETER	FROM (INPUT)	TO (OUTPUT)	TEST CONDITIONS		MIN	TYP	MAX	UNIT
t_{PLH}	A, B or C	Y	R_L = 280 Ω,	C_L = 15 pF		3	4.5	ns
t_{PHL}						3	5	ns
t_{PLH}			R_L = 280 Ω,	C_L = 50 pF		4.5		ns
t_{PHL}						5		ns

NOTE 2: Load circuits and voltage waveforms are shown in Section 1.

PACKAGING INFORMATION

Orderable part number	Status (1)	Material type (2)	Package | Pins	Package qty | Carrier	RoHS (3)	Lead finish/ Ball material (4)	MSL rating/ Peak reflow (5)	Op temp (°C)	Part marking (6)
JM38510/07005BCA	Active	Production	CDIP (J) | 14	25 | TUBE	No	SNPB	N/A for Pkg Type	-55 to 125	JM38510/ 07005BCA
JM38510/07005BCA.A	Active	Production	CDIP (J) | 14	25 | TUBE	No	SNPB	N/A for Pkg Type	-55 to 125	JM38510/ 07005BCA
JM38510/07005BDA	Active	Production	CFP (W) | 14	25 | TUBE	No	SNPB	N/A for Pkg Type	-55 to 125	JM38510/ 07005BDA
JM38510/07005BDA.A	Active	Production	CFP (W) | 14	25 | TUBE	No	SNPB	N/A for Pkg Type	-55 to 125	JM38510/ 07005BDA
JM38510/30005B2A	Active	Production	LCCC (FK) | 20	55 | TUBE	No	SNPB	N/A for Pkg Type	-55 to 125	JM38510/ 30005B2A
JM38510/30005B2A.A	Active	Production	LCCC (FK) | 20	55 | TUBE	No	SNPB	N/A for Pkg Type	-55 to 125	JM38510/ 30005B2A
JM38510/30005BCA	Active	Production	CDIP (J) | 14	25 | TUBE	No	SNPB	N/A for Pkg Type	-55 to 125	JM38510/ 30005BCA
JM38510/30005BCA.A	Active	Production	CDIP (J) | 14	25 | TUBE	No	SNPB	N/A for Pkg Type	-55 to 125	JM38510/ 30005BCA
JM38510/30005BDA	Active	Production	CFP (W) | 14	25 | TUBE	No	SNPB	N/A for Pkg Type	-55 to 125	JM38510/ 30005BDA
JM38510/30005BDA.A	Active	Production	CFP (W) | 14	25 | TUBE	No	SNPB	N/A for Pkg Type	-55 to 125	JM38510/ 30005BDA
JM38510/30005SDA	Active	Production	CFP (W) | 14	25 | TUBE	No	SNPB	N/A for Pkg Type	-55 to 125	JM38510/ 30005SDA
JM38510/30005SDA.A	Active	Production	CFP (W) | 14	25 | TUBE	No	SNPB	N/A for Pkg Type	-55 to 125	JM38510/ 30005SDA
M38510/07005BCA	Active	Production	CDIP (J) | 14	25 | TUBE	No	SNPB	N/A for Pkg Type	-55 to 125	JM38510/ 07005BCA
M38510/07005BDA	Active	Production	CFP (W) | 14	25 | TUBE	No	SNPB	N/A for Pkg Type	-55 to 125	JM38510/ 07005BDA
M38510/30005B2A	Active	Production	LCCC (FK) | 20	55 | TUBE	No	SNPB	N/A for Pkg Type	-55 to 125	JM38510/ 30005B2A
M38510/30005BCA	Active	Production	CDIP (J) | 14	25 | TUBE	No	SNPB	N/A for Pkg Type	-55 to 125	JM38510/ 30005BCA

Orderable part number	Status (1)	Material type (2)	Package | Pins	Package qty | Carrier	RoHS (3)	Lead finish/ Ball material (4)	MSL rating/ Peak reflow (5)	Op temp (°C)	Part marking (6)
M38510/30005BDA	Active	Production	CFP (W) | 14	25 | TUBE	No	SNPB	N/A for Pkg Type	-55 to 125	JM38510/ 30005BDA
M38510/30005SDA	Active	Production	CFP (W) | 14	25 | TUBE	No	SNPB	N/A for Pkg Type	-55 to 125	JM38510/ 30005SDA
SN54LS10J	Active	Production	CDIP (J) | 14	25 | TUBE	No	SNPB	N/A for Pkg Type	-55 to 125	SN54LS10J
SN54LS10J.A	Active	Production	CDIP (J) | 14	25 | TUBE	No	SNPB	N/A for Pkg Type	-55 to 125	SN54LS10J
SN54S10J	Active	Production	CDIP (J) | 14	25 | TUBE	No	SNPB	N/A for Pkg Type	-55 to 125	SN54S10J
SN54S10J.A	Active	Production	CDIP (J) | 14	25 | TUBE	No	SNPB	N/A for Pkg Type	-55 to 125	SN54S10J
SN74LS10D	Obsolete	Production	SOIC (D) | 14	-	-	Call TI	Call TI	0 to 70	LS10
SN74LS10DR	Active	Production	SOIC (D) | 14	2500 | LARGE T&R	Yes	NIPDAU	Level-1-260C-UNLIM	0 to 70	LS10
SN74LS10DR.A	Active	Production	SOIC (D) | 14	2500 | LARGE T&R	Yes	NIPDAU	Level-1-260C-UNLIM	0 to 70	LS10
SN74LS10DRG4	Active	Production	SOIC (D) | 14	2500 | LARGE T&R	Yes	NIPDAU	Level-1-260C-UNLIM	0 to 70	LS10
SN74LS10N	Active	Production	PDIP (N) | 14	25 | TUBE	Yes	NIPDAU	N/A for Pkg Type	0 to 70	SN74LS10N
SN74LS10N.A	Active	Production	PDIP (N) | 14	25 | TUBE	Yes	NIPDAU	N/A for Pkg Type	0 to 70	SN74LS10N
SN74LS10NSR	Active	Production	SOP (NS) | 14	2000 | LARGE T&R	Yes	NIPDAU	Level-1-260C-UNLIM	0 to 70	74LS10
SN74LS10NSR.A	Active	Production	SOP (NS) | 14	2000 | LARGE T&R	Yes	NIPDAU	Level-1-260C-UNLIM	0 to 70	74LS10
SN74S10N	Active	Production	PDIP (N) | 14	25 | TUBE	Yes	NIPDAU	N/A for Pkg Type	0 to 70	SN74S10N
SN74S10N.A	Active	Production	PDIP (N) | 14	25 | TUBE	Yes	NIPDAU	N/A for Pkg Type	0 to 70	SN74S10N
SNJ54LS10FK	Active	Production	LCCC (FK) | 20	55 | TUBE	No	SNPB	N/A for Pkg Type	-55 to 125	SNJ54LS 10FK
SNJ54LS10FK.A	Active	Production	LCCC (FK) | 20	55 | TUBE	No	SNPB	N/A for Pkg Type	-55 to 125	SNJ54LS 10FK
SNJ54LS10J	Active	Production	CDIP (J) | 14	25 | TUBE	No	SNPB	N/A for Pkg Type	-55 to 125	SNJ54LS10J
SNJ54LS10J.A	Active	Production	CDIP (J) | 14	25 | TUBE	No	SNPB	N/A for Pkg Type	-55 to 125	SNJ54LS10J
SNJ54LS10W	Active	Production	CFP (W) | 14	25 | TUBE	No	SNPB	N/A for Pkg Type	-55 to 125	SNJ54LS10W
SNJ54LS10W.A	Active	Production	CFP (W) | 14	25 | TUBE	No	SNPB	N/A for Pkg Type	-55 to 125	SNJ54LS10W
SNJ54S10J	Active	Production	CDIP (J) | 14	25 | TUBE	No	SNPB	N/A for Pkg Type	-55 to 125	SNJ54S10J
SNJ54S10J.A	Active	Production	CDIP (J) | 14	25 | TUBE	No	SNPB	N/A for Pkg Type	-55 to 125	SNJ54S10J
SNJ54S10W	Active	Production	CFP (W) | 14	25 | TUBE	No	SNPB	N/A for Pkg Type	-55 to 125	SNJ54S10W
SNJ54S10W.A	Active	Production	CFP (W) | 14	25 | TUBE	No	SNPB	N/A for Pkg Type	-55 to 125	SNJ54S10W

(1) **Status:** For more details on status, see our product life cycle.

(2) **Material type:** When designated, preproduction parts are prototypes/experimental devices, and are not yet approved or released for full production. Testing and final process, including without limitation quality assurance, reliability performance testing, and/or process qualification, may not yet be complete, and this item is subject to further changes or possible discontinuation. If available for ordering, purchases will be subject to an additional waiver at checkout, and are intended for early internal evaluation purposes only. These items are sold without warranties of any kind.

(3) **RoHS values:** Yes, No, RoHS Exempt. See the TI RoHS Statement for additional information and value definition.

(4) **Lead finish/Ball material:** Parts may have multiple material finish options. Finish options are separated by a vertical ruled line. Lead finish/Ball material values may wrap to two lines if the finish value exceeds the maximum column width.

(5) **MSL rating/Peak reflow:** The moisture sensitivity level ratings and peak solder (reflow) temperatures. In the event that a part has multiple moisture sensitivity ratings, only the lowest level per JEDEC standards is shown. Refer to the shipping label for the actual reflow temperature that will be used to mount the part to the printed circuit board.

(6) **Part marking:** There may be an additional marking, which relates to the logo, the lot trace code information, or the environmental category of the part.

Multiple part markings will be inside parentheses. Only one part marking contained in parentheses and separated by a "~" will appear on a part. If a line is indented then it is a continuation of the previous line and the two combined represent the entire part marking for that device.

Important Information and Disclaimer: The information provided on this page represents TI's knowledge and belief as of the date that it is provided. TI bases its knowledge and belief on information provided by third parties, and makes no representation or warranty as to the accuracy of such information. Efforts are underway to better integrate information from third parties. TI has taken and continues to take reasonable steps to provide representative and accurate information but may not have conducted destructive testing or chemical analysis on incoming materials and chemicals. TI and TI suppliers consider certain information to be proprietary, and thus CAS numbers and other limited information may not be available for release.

In no event shall TI's liability arising out of such information exceed the total purchase price of the TI part(s) at issue in this document sold by TI to Customer on an annual basis.

OTHER QUALIFIED VERSIONS OF SN54LS10, SN54LS10-SP, SN54S10, SN74LS10, SN74S10 :

- Catalog : SN74LS10, SN54LS10, SN74S10
- Military : SN54LS10, SN54S10
- Space : SN54LS10-SP

NOTE: Qualified Version Definitions:

- Catalog - TI's standard catalog product

- Military - QML certified for Military and Defense Applications
- Space - Radiation tolerant, ceramic packaging and qualified for use in Space-based application

TAPE AND REEL INFORMATION

REEL DIMENSIONS

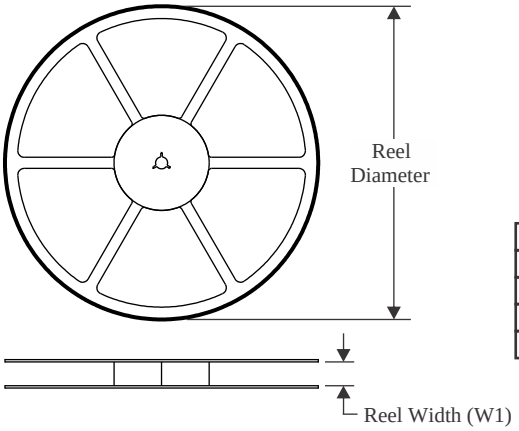

TAPE DIMENSIONS

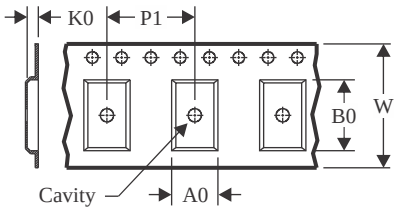

A0	Dimension designed to accommodate the component width
B0	Dimension designed to accommodate the component length
K0	Dimension designed to accommodate the component thickness
W	Overall width of the carrier tape
P1	Pitch between successive cavity centers

QUADRANT ASSIGNMENTS FOR PIN 1 ORIENTATION IN TAPE

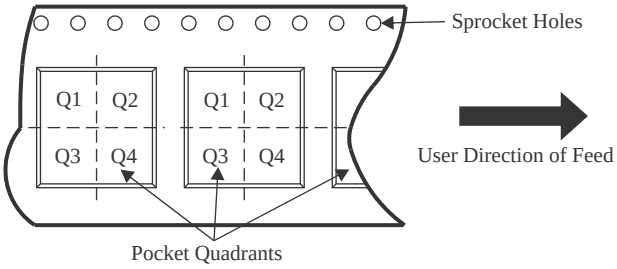

*All dimensions are nominal

Device	Package Type	Package Drawing	Pins	SPQ	Reel Diameter (mm)	Reel Width W1 (mm)	A0 (mm)	B0 (mm)	K0 (mm)	P1 (mm)	W (mm)	Pin1 Quadrant
SN74LS10DR	SOIC	D	14	2500	330.0	16.4	6.5	9.0	2.1	8.0	16.0	Q1
SN74LS10NSR	SOP	NS	14	2000	330.0	16.4	8.2	10.5	2.5	12.0	16.0	Q1

TAPE AND REEL BOX DIMENSIONS

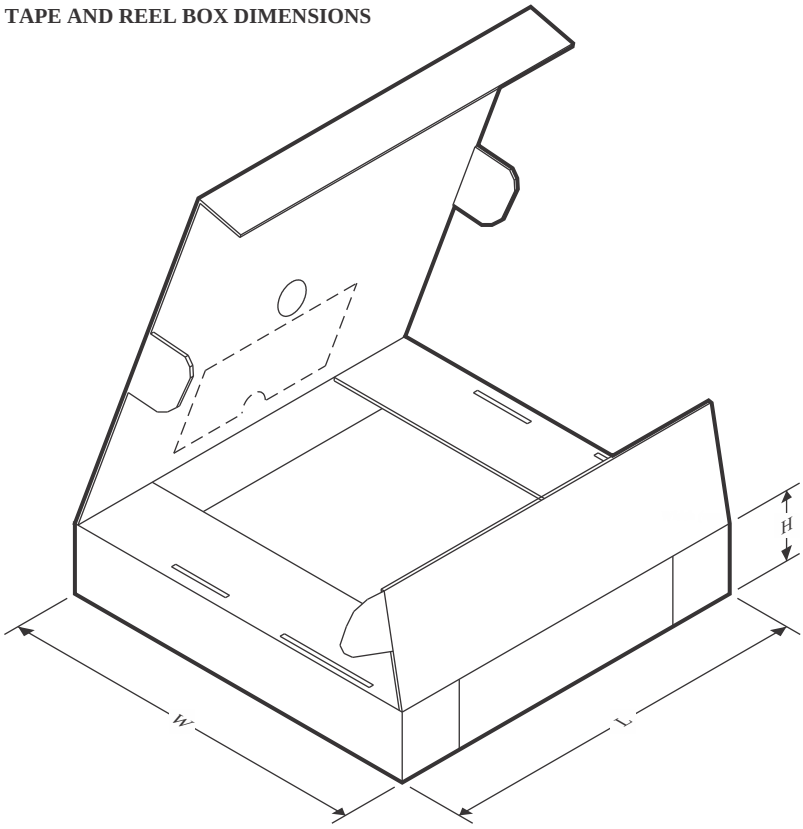

*All dimensions are nominal

Device	Package Type	Package Drawing	Pins	SPQ	Length (mm)	Width (mm)	Height (mm)
SN74LS10DR	SOIC	D	14	2500	356.0	356.0	35.0
SN74LS10NSR	SOP	NS	14	2000	356.0	356.0	35.0

TUBE

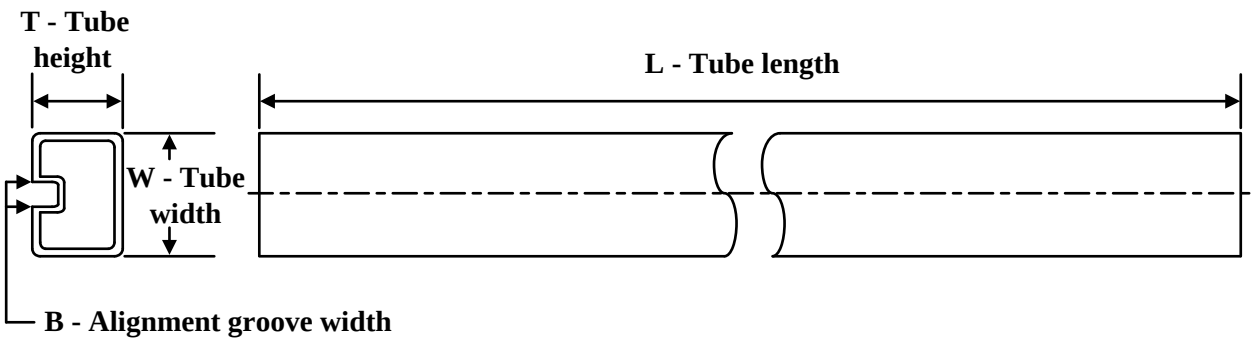

*All dimensions are nominal

Device	Package Name	Package Type	Pins	SPQ	L (mm)	W (mm)	T (µm)	B (mm)
JM38510/07005BDA	W	CFP	14	25	506.98	26.16	6220	NA
JM38510/07005BDA.A	W	CFP	14	25	506.98	26.16	6220	NA
JM38510/30005B2A	FK	LCCC	20	55	506.98	12.06	2030	NA
JM38510/30005B2A.A	FK	LCCC	20	55	506.98	12.06	2030	NA
JM38510/30005BDA	W	CFP	14	25	506.98	26.16	6220	NA
JM38510/30005BDA.A	W	CFP	14	25	506.98	26.16	6220	NA
JM38510/30005SDA	W	CFP	14	25	506.98	26.16	6220	NA
JM38510/30005SDA.A	W	CFP	14	25	506.98	26.16	6220	NA
M38510/07005BDA	W	CFP	14	25	506.98	26.16	6220	NA
M38510/30005B2A	FK	LCCC	20	55	506.98	12.06	2030	NA
M38510/30005BDA	W	CFP	14	25	506.98	26.16	6220	NA
M38510/30005SDA	W	CFP	14	25	506.98	26.16	6220	NA
SN74LS10N	N	PDIP	14	25	506	13.97	11230	4.32
SN74LS10N	N	PDIP	14	25	506	13.97	11230	4.32
SN74LS10N.A	N	PDIP	14	25	506	13.97	11230	4.32
SN74LS10N.A	N	PDIP	14	25	506	13.97	11230	4.32
SN74S10N	N	PDIP	14	25	506	13.97	11230	4.32
SN74S10N	N	PDIP	14	25	506	13.97	11230	4.32
SN74S10N.A	N	PDIP	14	25	506	13.97	11230	4.32
SN74S10N.A	N	PDIP	14	25	506	13.97	11230	4.32
SNJ54LS10FK	FK	LCCC	20	55	506.98	12.06	2030	NA
SNJ54LS10FK.A	FK	LCCC	20	55	506.98	12.06	2030	NA
SNJ54LS10W	W	CFP	14	25	506.98	26.16	6220	NA
SNJ54LS10W.A	W	CFP	14	25	506.98	26.16	6220	NA

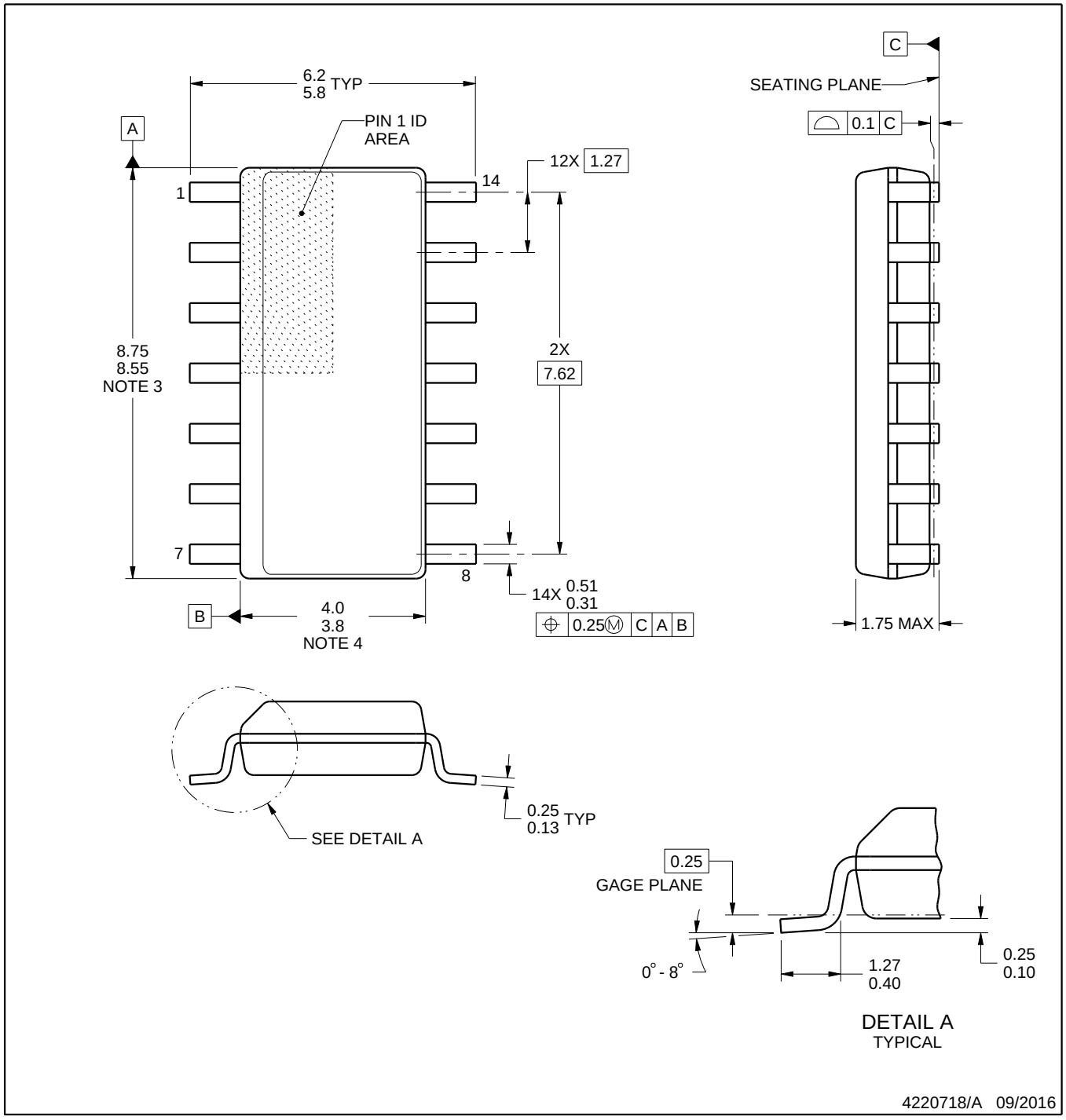

NOTES:

1. All linear dimensions are in millimeters. Dimensions in parenthesis are for reference only. Dimensioning and tolerancing per ASME Y14.5M.
2. This drawing is subject to change without notice.
3. This dimension does not include mold flash, protrusions, or gate burrs. Mold flash, protrusions, or gate burrs shall not exceed 0.15 mm, per side.
4. This dimension does not include interlead flash. Interlead flash shall not exceed 0.43 mm, per side.
5. Reference JEDEC registration MS-012, variation AB.

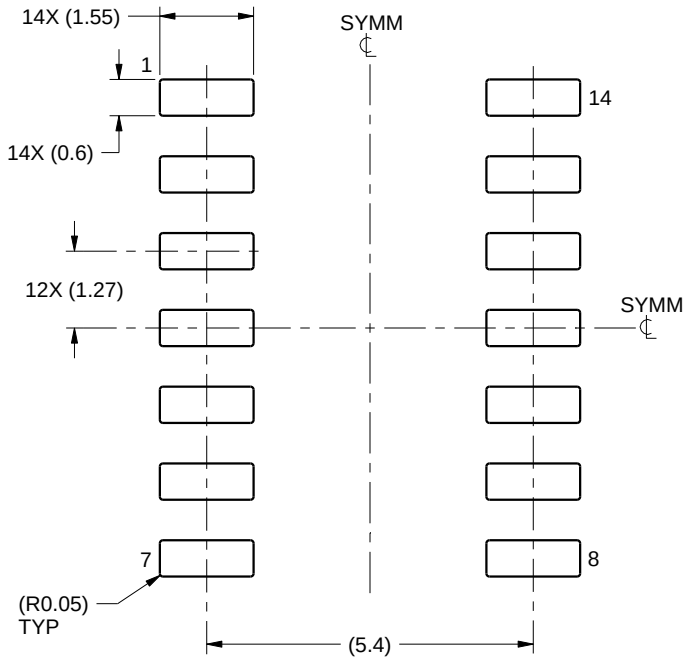

LAND PATTERN EXAMPLE
SCALE:8X

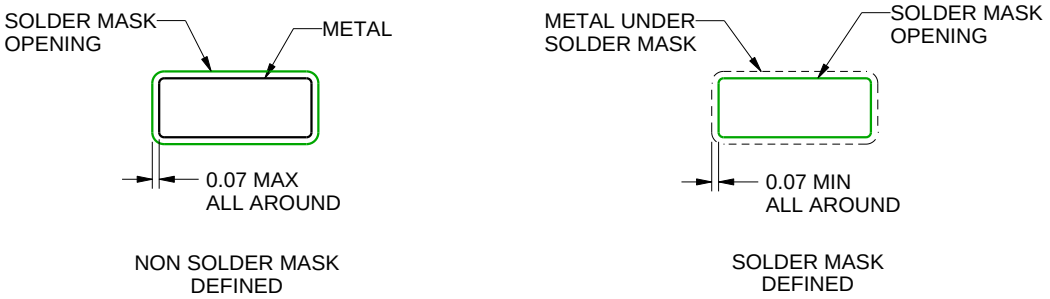

SOLDER MASK DETAILS

4220718/A 09/2016

NOTES: (continued)

6. Publication IPC-7351 may have alternate designs.
7. Solder mask tolerances between and around signal pads can vary based on board fabrication site.

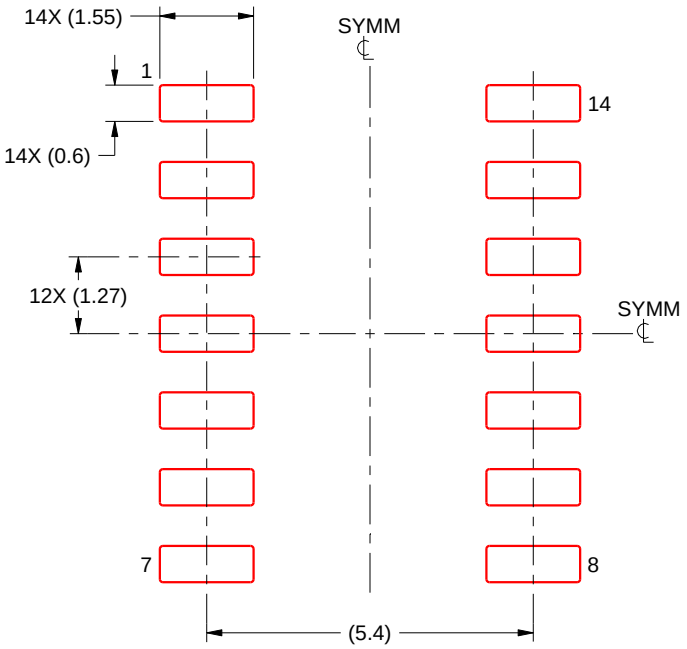

SOLDER PASTE EXAMPLE
BASED ON 0.125 mm THICK STENCIL
SCALE:8X

4220718/A 09/2016

NOTES: (continued)

8. Laser cutting apertures with trapezoidal walls and rounded corners may offer better paste release. IPC-7525 may have alternate design recommendations.
9. Board assembly site may have different recommendations for stencil design.

MECHANICAL DATA

NS (R-PDSO-G)** **PLASTIC SMALL-OUTLINE PACKAGE**

14-PINS SHOWN

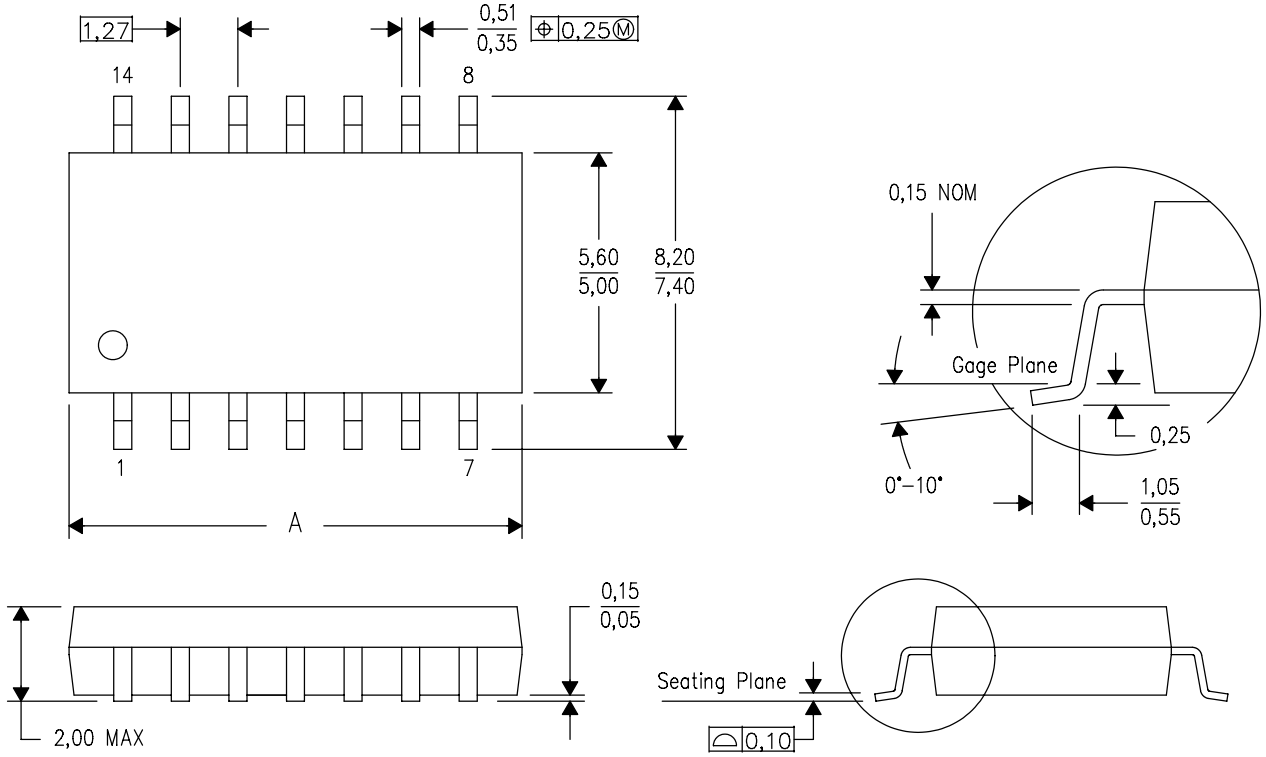

DIM \ PINS **	14	16	20	24
A MAX	10,50	10,50	12,90	15,30
A MIN	9,90	9,90	12,30	14,70

4040062/C 03/03

NOTES:
A. All linear dimensions are in millimeters.
B. This drawing is subject to change without notice.
C. Body dimensions do not include mold flash or protrusion, not to exceed 0,15.

W (R–GDFP–F14) CERAMIC DUAL FLATPACK

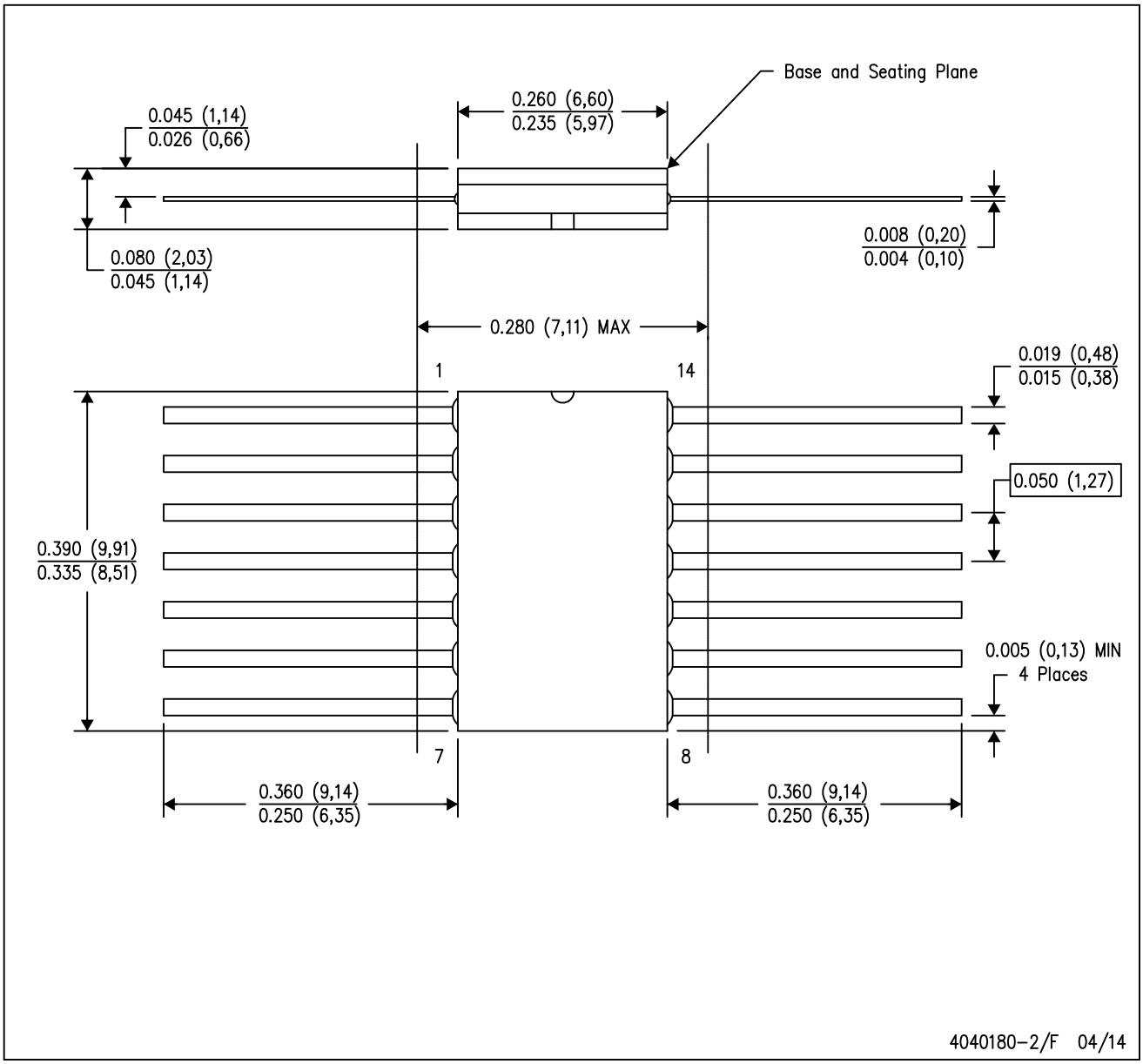

NOTES:
A. All linear dimensions are in inches (millimeters).
B. This drawing is subject to change without notice.
C. This package can be hermetically sealed with a ceramic lid using glass frit.
D. Index point is provided on cap for terminal identification only.
E. Falls within MIL STD 1835 GDFP1–F14

GENERIC PACKAGE VIEW

FK 20

LCCC - 2.03 mm max height

8.89 x 8.89, 1.27 mm pitch

LEADLESS CERAMIC CHIP CARRIER

This image is a representation of the package family, actual package may vary.
Refer to the product data sheet for package details.

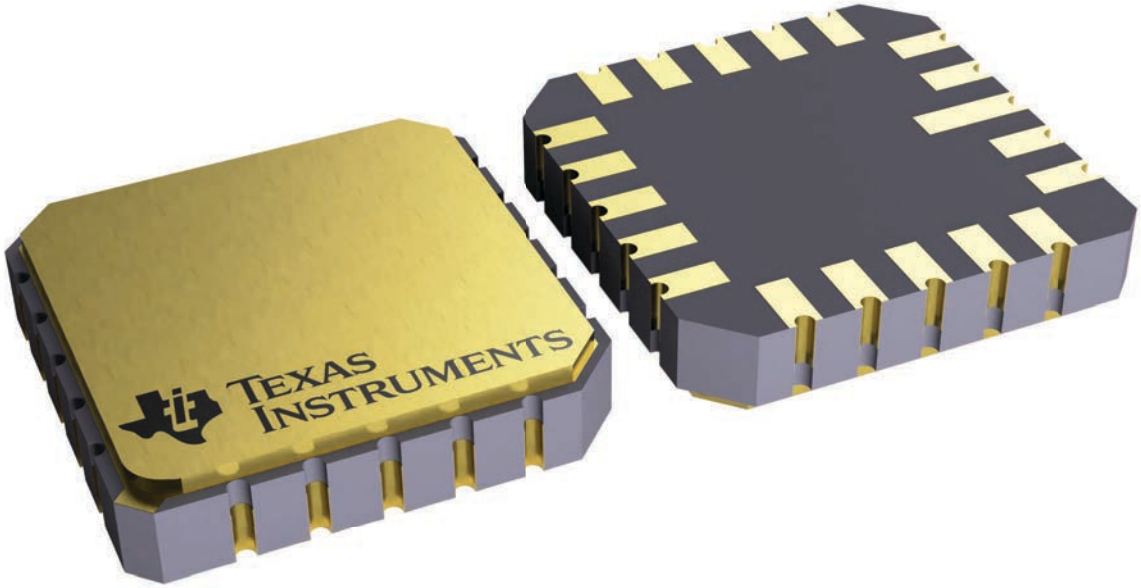

4229370VA\

J 14 CDIP - 5.08 mm max height

CERAMIC DUAL IN LINE PACKAGE

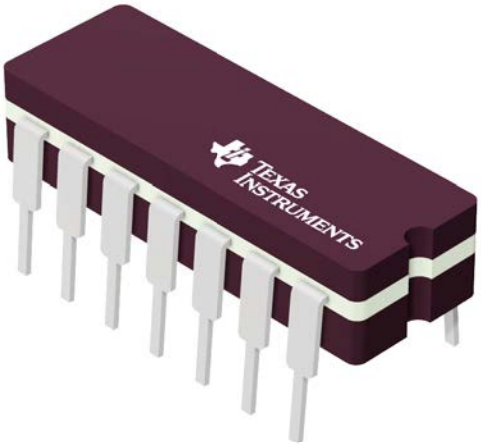

Images above are just a representation of the package family, actual package may vary.
Refer to the product data sheet for package details.

4040083-5/G

PACKAGE OUTLINE

J0014A

CDIP - 5.08 mm max height

CERAMIC DUAL IN LINE PACKAGE

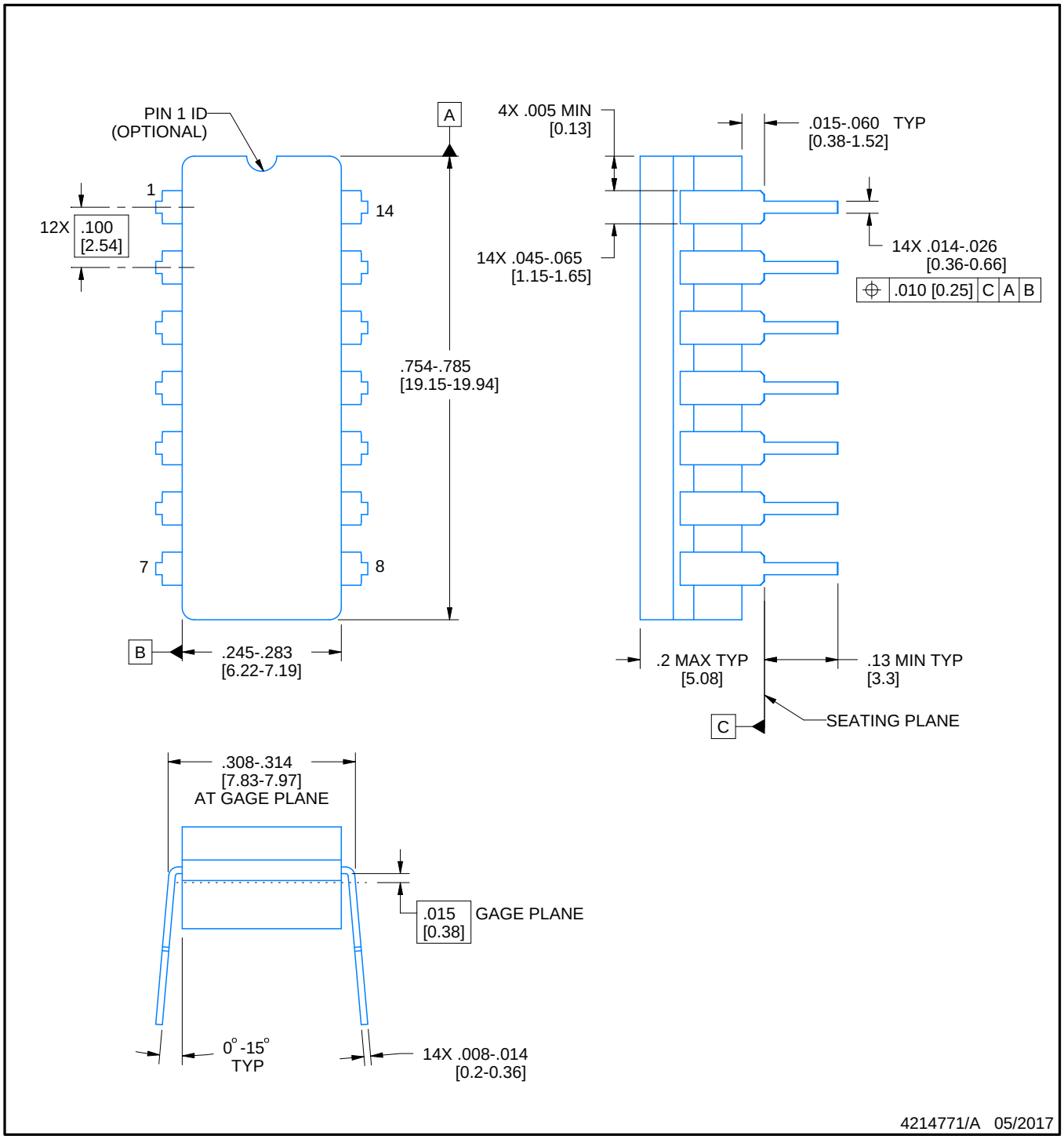

NOTES:

1. All controlling linear dimensions are in inches. Dimensions in brackets are in millimeters. Any dimension in brackets or parenthesis are for reference only. Dimensioning and tolerancing per ASME Y14.5M.
2. This drawing is subject to change without notice.
3. This package is hermitically sealed with a ceramic lid using glass frit.
4. Index point is provided on cap for terminal identification only and on press ceramic glass frit seal only.
5. Falls within MIL-STD-1835 and GDIP1-T14.

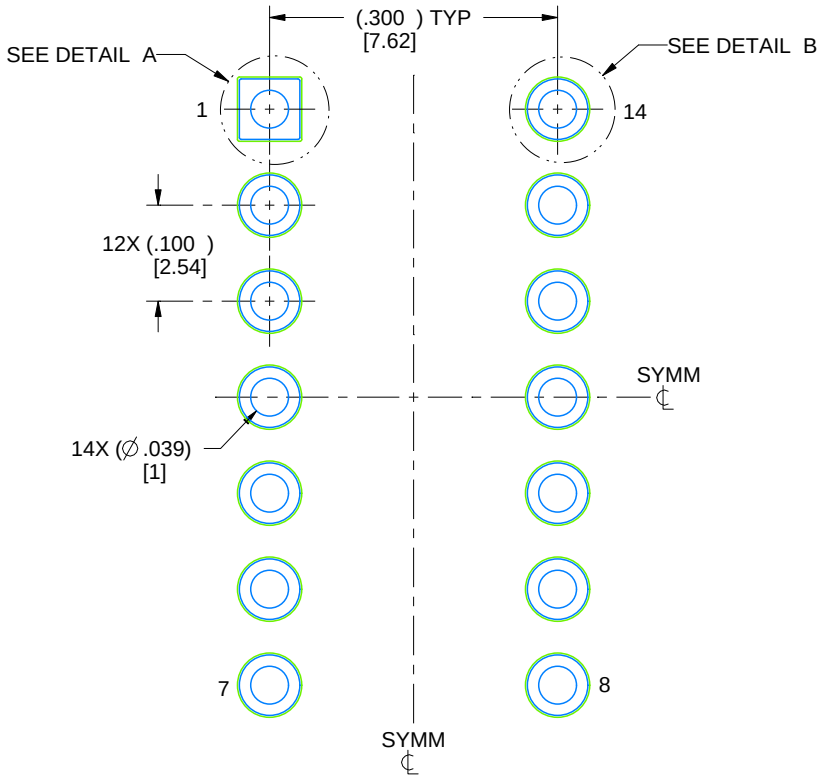

LAND PATTERN EXAMPLE
NON-SOLDER MASK DEFINED
SCALE: 5X

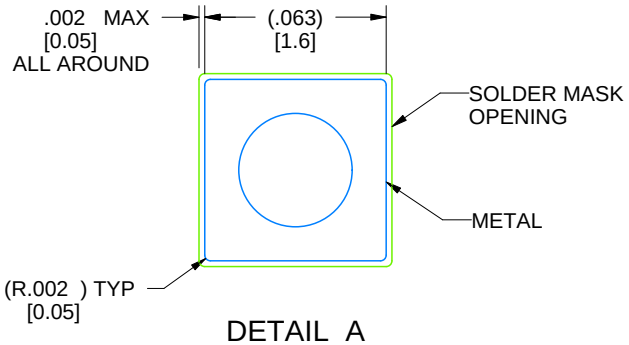

DETAIL A
SCALE: 15X

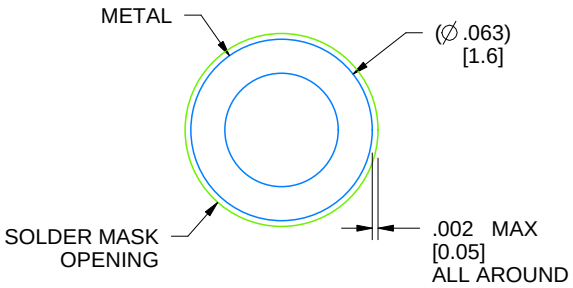

DETAIL B
13X, SCALE: 15X

4214771/A 05/2017

N (R–PDIP–T**) PLASTIC DUAL–IN–LINE PACKAGE

16 PINS SHOWN

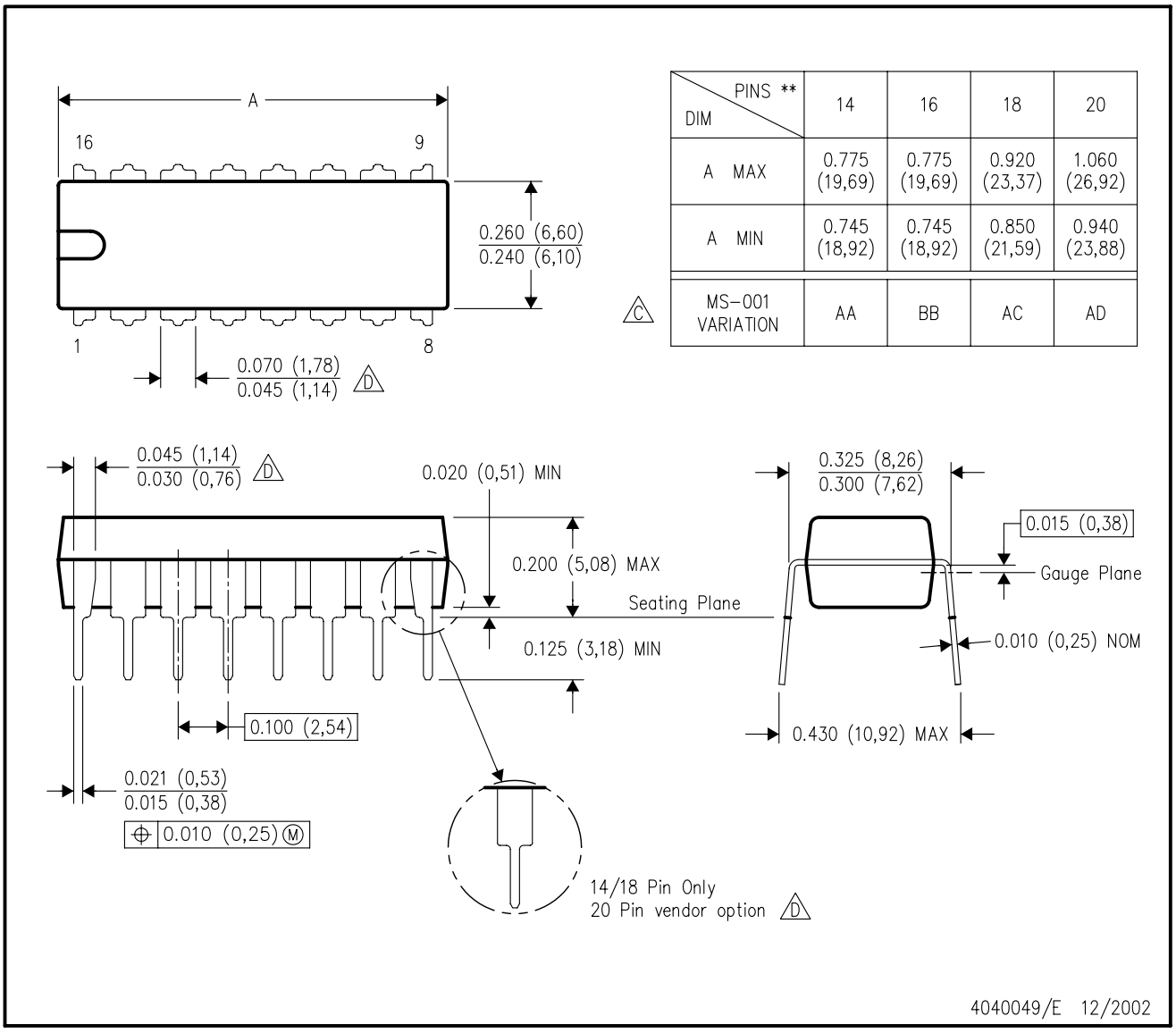

DIM \ PINS **	14	16	18	20
A MAX	0.775 (19,69)	0.775 (19,69)	0.920 (23,37)	1.060 (26,92)
A MIN	0.745 (18,92)	0.745 (18,92)	0.850 (21,59)	0.940 (23,88)
MS–001 VARIATION (C)	AA	BB	AC	AD

NOTES:
A. All linear dimensions are in inches (millimeters).
B. This drawing is subject to change without notice.
C. Falls within JEDEC MS–001, except 18 and 20 pin minimum body length (Dim A).
D. The 20 pin end lead shoulder width is a vendor option, either half or full width.

IMPORTANT NOTICE AND DISCLAIMER

TI PROVIDES TECHNICAL AND RELIABILITY DATA (INCLUDING DATA SHEETS), DESIGN RESOURCES (INCLUDING REFERENCE DESIGNS), APPLICATION OR OTHER DESIGN ADVICE, WEB TOOLS, SAFETY INFORMATION, AND OTHER RESOURCES “AS IS” AND WITH ALL FAULTS, AND DISCLAIMS ALL WARRANTIES, EXPRESS AND IMPLIED, INCLUDING WITHOUT LIMITATION ANY IMPLIED WARRANTIES OF MERCHANTABILITY, FITNESS FOR A PARTICULAR PURPOSE OR NON-INFRINGEMENT OF THIRD PARTY INTELLECTUAL PROPERTY RIGHTS.

These resources are intended for skilled developers designing with TI products. You are solely responsible for (1) selecting the appropriate TI products for your application, (2) designing, validating and testing your application, and (3) ensuring your application meets applicable standards, and any other safety, security, regulatory or other requirements.

These resources are subject to change without notice. TI grants you permission to use these resources only for development of an application that uses the TI products described in the resource. Other reproduction and display of these resources is prohibited. No license is granted to any other TI intellectual property right or to any third party intellectual property right. TI disclaims responsibility for, and you will fully indemnify TI and its representatives against, any claims, damages, costs, losses, and liabilities arising out of your use of these resources.

TI’s products are provided subject to TI’s Terms of Sale or other applicable terms available either on ti.com or provided in conjunction with such TI products. TI’s provision of these resources does not expand or otherwise alter TI’s applicable warranties or warranty disclaimers for TI products.

TI objects to and rejects any additional or different terms you may have proposed.

Mailing Address: Texas Instruments, Post Office Box 655303, Dallas, Texas 75265
Copyright © 2025, Texas Instruments Incorporated