REF2125 低ドリフト、低消費電力、小型のシリーズ電圧リファレンス クリーン・スタート付き

1 特長

- 初期精度: ±0.05% (最大値)
- 温度ドリフト係数: 6ppm/℃(最大値)
- 動作温度範囲 -40℃～+125℃
- 出力電流: ±10mA
- 低静止電流: 95µA (最大値)
- 広い入力電圧範囲: 12V
- 出力1/fノイズ(0.1Hz～10Hz): 5µV_{PP}/V
- 優れた長期安定性: 30ppm/1000時間
- 小型の5ピンSOT-23パッケージ

2 アプリケーション

- 高精度データ・アクイジション・システム
- 電力監視
- PLCアナログI/Oモジュール
- 産業用計測機器
- フィールド・トランスミッタ
- 試験用機器
- 4～20mAループ・センサ
- LCRメータ

3 概要

REF2125デバイスは、低温度ドリフト(6 ppm/℃)、低消費電力、高精度のCMOS電圧リファレンスで、消費電力を95µA未満に抑えて、±0.05%の初期精度と低動作電流を実現します。また、出力ノイズが5µV_{p-p}/Vと非常に低いので、高分解能のデータ・コンバータやノイズの影響を受けやすいシステムで高いシグナル・インテグリティを維持できます。

デバイスの低い出力電圧ヒステリシスと低い長期出力電圧ドリフトにより、安定性とシステム信頼性がさらに改善されています。さらに、動作電流の低い(95µA)小型デバイスであるため、バッテリ駆動の携帯アプリケーションに最適です。

REF2125は、-40℃～+125℃の広い温度範囲で動作が規定されています。その他の電圧オプションについては、TIの営業担当者にお問い合わせください。

製品情報(1)

型番	パッケージ	本体サイズ(公称)
REF2125	SOT-23 (5)	2.90mm×1.60mm

(1) 利用可能なすべてのパッケージについては、このデータシートの末尾にある注文情報を参照してください。

概略回路図

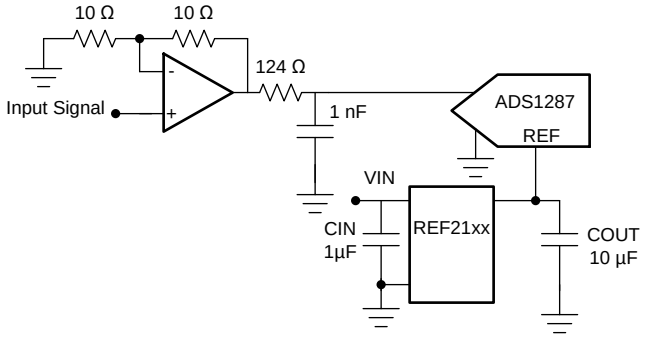

Copyright © 2017, Texas Instruments Incorporated

英語版のTI製品についての情報を翻訳したこの資料は、製品の概要を確認する目的で便宜的に提供しているものです。該当する正式な英語版の最新情報は、www.ti.comで閲覧でき、その内容が常に優先されます。TIでは翻訳の正確性および妥当性につきましては一切保証いたしません。実際の設計などの前には、必ず最新版の英語版をご参照くださいますようお願いいたします。

目次

1 特長 ... 1
2 アプリケーション ... 1
3 概要 ... 1
4 改訂履歴 ... 2
5 **Pin Configuration and Functions** ... 3
6 **Specifications** ... 4
6.1 Absolute Maximum Ratings ... 4
6.2 ESD Ratings ... 4
6.3 Recommended Operating Conditions ... 4
6.4 Thermal Information ... 4
6.5 Electrical Characteristics ... 5
6.6 Typical Characteristics ... 7
7 **Parameter Measurement Information** ... 11
7.1 Solder Heat Shift ... 11
7.2 Long-Term Stability ... 12
7.3 Thermal Hysteresis ... 12
7.4 Power Dissipation ... 13
7.5 Noise Performance ... 14
8 **Detailed Description** ... 15
8.1 Overview ... 15
8.2 Functional Block Diagram ... 15
8.3 Feature Description ... 15
8.4 Device Functional Modes ... 16
9 **Applications and Implementation** ... 18
9.1 Application Information ... 18
9.2 Typical Application: Basic Voltage Reference Connection ... 18
10 **Power-Supply Recommendations** ... 19
11 **Layout** ... 20
11.1 Layout Guidelines ... 20
11.2 Layout Example ... 20
12 デバイスおよびドキュメントのサポート ... 21
12.1 ドキュメントのサポート ... 21
12.2 ドキュメントの更新通知を受け取る方法 ... 21
12.3 コミュニティ・リソース ... 21
12.4 商標 ... 21
12.5 静電気放電に関する注意事項 ... 21
12.6 Glossary ... 21
13 メカニカル、パッケージ、および注文情報 ... 21

4 改訂履歴

日付	改訂内容	注
2017年9月	*	初版

Copyright © 2017, Texas Instruments Incorporated

5 Pin Configuration and Functions

DBV Package
5-Pin SOT-23
Top View

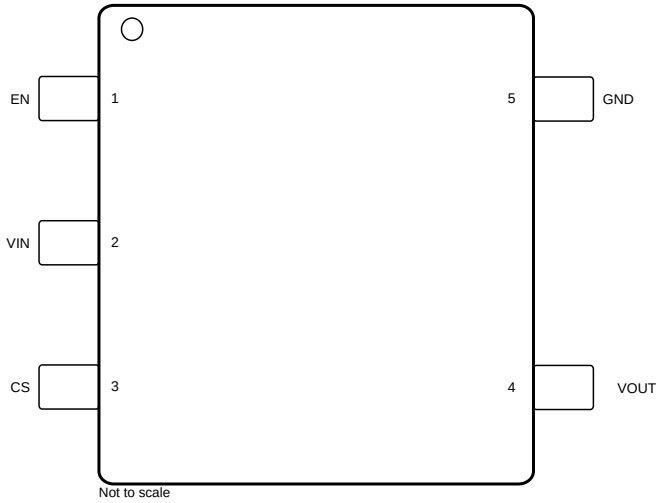

Pin Functions

PIN		TYPE	DESCRIPTION
NO.	NAME		
1	EN	Input	Enable connection. Enables or disables the device.
2	VIN	Power	Input supply voltage connection.
3	CS	Input	Clean start pin. Connect to a resistor or capacitor to enable the clean start feature.
4	VOUT	Output	Reference voltage output.
5	GND	Ground	Ground connection.

Copyright © 2017, Texas Instruments Incorporated

6 Specifications

6.1 Absolute Maximum Ratings

over operating free-air temperature range (unless otherwise noted)[1]

		MIN	MAX	UNIT
Input voltage	IN	V_{REF} + 0.05	13	V
	EN	–0.3	IN + 0.3	
Output voltage	V_{REF}	–0.3	5.5	V
Output short circuit current			20	mA
Temperature	Operating, T_A	–55	150	°C
	Storage T_{stg}	–65	170	

(1) Stresses beyond those listed under *Absolute Maximum Ratings* may cause permanent damage to the device. These are stress ratings only, which do not imply functional operation of the device at these or any other conditions beyond those indicated under *Recommended Operating Conditions*. Exposure to absolute-maximum-rated conditions for extended periods may affect device reliability.

6.2 ESD Ratings

			VALUE	UNIT
$V_{(ESD)}$	Electrostatic discharge	Human-body model (HBM), per ANSI/ESDA/JEDEC JS-001[1]	±1000	V
		Charged-device model (CDM), per JEDEC specification JESD22-C101[2]	±250	

(1) JEDEC document JEP155 states that 500-V HBM allows safe manufacturing with a standard ESD control process.
(2) JEDEC document JEP157 states that 250-V CDM allows safe manufacturing with a standard ESD control process.

6.3 Recommended Operating Conditions

over operating free-air temperature range (unless otherwise noted)

		MIN	NOM	MAX	UNIT
IN	Supply input voltage (I_L = 0 mA, T_A = 25°C)	V_{REF} + V_{DO} [1]		12	V
EN	Enable voltage	0		IN	V
I_L	Output current	–10		10	mA
T_A	Operating temperature	–40	25	125	°C

(1) Dropout voltage.

6.4 Thermal Information

THERMAL METRIC[1]		REF2125 DBV (SOT-23) 6 PINS	UNIT
$R_{\theta JA}$	Junction-to-ambient thermal resistance	185	°C/W
$R_{\theta JC(top)}$	Junction-to-case (top) thermal resistance	156	°C/W
$R_{\theta JB}$	Junction-to-board thermal resistance	29.6	°C/W
ψ_{JT}	Junction-to-top characterization parameter	33.8	°C/W
ψ_{JB}	Junction-to-board characterization parameter	29.1	°C/W
$R_{\theta JC(bot)}$	Junction-to-case (bottom) thermal resistance	N/A	°C/W

(1) For more information about traditional and new thermal metrics, see the *Semiconductor and IC Package Thermal Metrics* application report.

Copyright © 2017, Texas Instruments Incorporated

6.5 Electrical Characteristics

At T_A = 25°C unless otherwise noted.

PARAMETER		TEST CONDITIONS		MIN	TYP	MAX	UNIT
ACCURACY AND DRIFT							
	Output voltage accuracy	–40°C ≤ T_A ≤ 125°C		–0.05%		0.05%	
	Output voltage temperature coefficient(1)				2.5	6	ppm/°C
LINE AND LOAD REGULATION							
$\Delta V_{(O\Delta VIN)}$	Line regulation	V_{IN} = 2.55 V to 12 V , T_A = 25°C			2		ppm/V
		V_{IN} = V_{REF} + V_{DO}(2) to 12 V, −40°C ≤ T_A ≤ 125°C				15	
$\Delta V_{(O\Delta IL)}$	Load regulation	I_L = 0 mA to 10 mA, V_{IN} = 3 V, T_A = 25°C	Sourcing		20		ppm/mA
		I_L = 0 mA to 10 mA, V_{IN} = 3 V, −40°C ≤ T_A ≤ 125°C	Sourcing			30	
		I_L = 0 mA to –10 mA, V_{IN} = V_{REF}+ V_{DO}(2), T_A = 25°C	Sinking		40		
		I_L = 0 mA to –10 mA, V_{IN} = V_{REF}+ V_{DO}(2), −40°C ≤ T_A ≤ 125°C	Sinking			70	
I_{SC}	Short-circuit current(3)	V_{REF} = 0, C_{CS} = No connect, T_A = 25°C			18		mA
		R_{CS} = 500kΩ, T_A = 25°C			7		mA
		C_{CS} = GND, T_A = 25°C			0.5		mA
NOISE							
e_n p-p	Output voltage noise(4)	f = 0.1 Hz to 10 Hz			5		µV p-p/V
		f = 10 Hz to 10 kHz			24		µV rms
e_n	Output voltage noise density	f = 1 kHz			0.25		ppm/√Hz
HYSTERESIS AND LONG TERM STABILITY							
	Long-term stability(5)	1000 hours			30		ppm
	Output voltage hysteresis(6)	T_A = 25°C to −40°C to 125°C to 25°C, Cycle 1			30		ppm
		T_A = 25°C to −40°C to 125°C to 25°C, Cycle 2			10		
TURNON							
t_{ON}	Turnon time	0.1% of output voltage settling, C_L = 10 µF, REF2125			2.5		ms
CAPACITIVE LOAD							
C_L	Stable output capacitor value	−40°C ≤ T_A ≤ 125°C		0.1		10	µF
OUTPUT VOLTAGE							
V_{REF}	Output voltage	REF2125			2.5		V

(1) Temperature drift is specified according to the box method. See *Feature Description* for more details.
(2) Dropout voltage under test condition is 100mV.
(3) In clean start section it is referred as I_{PEAK}.
(4) The peak-to-peak noise measurement procedure is explained in more detail in *Noise Performance*.
(5) Long-term stability measurement procedure is explained in more in detail in *Long-Term Stability*.
(6) The thermal hysteresis measurement procedure is explained in more detail in *Thermal Hysteresis*.

Copyright © 2017, Texas Instruments Incorporated

Electrical Characteristics (continued)

At T_A = 25°C unless otherwise noted.

PARAMETER		TEST CONDITIONS		MIN	TYP	MAX	UNIT
POWER SUPPLY							
V_{IN}	Input voltage			$V_{REF} + V_{DO}$		12	V
I_L	Output current capacity	$V_{IN} = V_{REF} + V_{DO}$ (2) to 12 V	Sourcing	10			mA
		$V_{IN} = V_{REF} + V_{DO}$ (2) to 12 V	Sinking	–10			
I_Q	Quiescent current	−40°C ≤ T_A ≤ 125°C	Active mode		72	95	µA
		−40°C ≤ T_A ≤ 125°C	Shutdown mode		2.5	3	
V_{DO}	Dropout voltage	I_L = 0 mA, T_A= 25°C			50		mV
		I_L = 0 mA, −40°C ≤ T_A ≤ +125°C				100	
		I_L = 10 mA, −40°C ≤ T_A ≤ +125°C				500	
V_{EN}	ENABLE pin voltage	Voltage reference in active mode (EN = 1)		1.6			V
		Voltage reference in shutdown mode (EN = 0)				0.5	
I_{EN}	ENABLE pin leakage current	ENABLE = V_{IN}, −40°C ≤ T_A ≤ 125°C			1	2	µA

Copyright © 2017, Texas Instruments Incorporated

6.6 Typical Characteristics

at T_A = 25°C, V_{IN} = V_{EN} = 12 V, I_L = 0 mA , C_L = 10 µF, C_{IN} = 0.1 µF (unless otherwise noted)

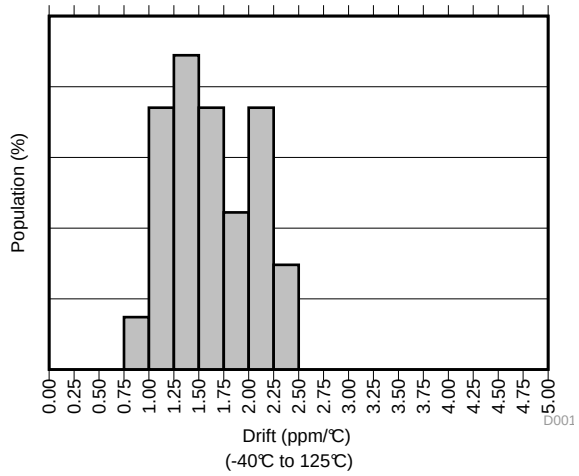

Figure 1. Temperature Drift

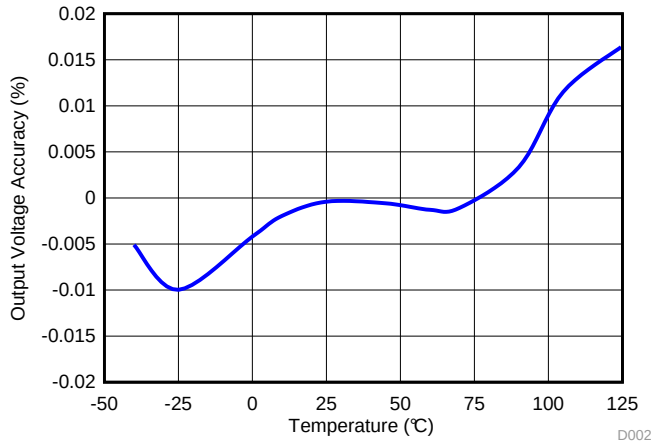

Figure 2. Output Voltage Accuracy vs Temperature

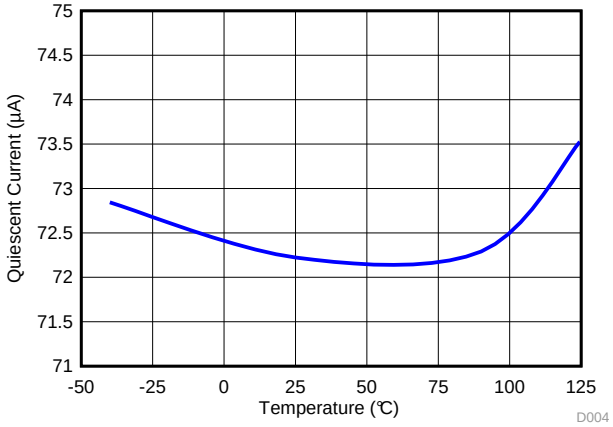

Figure 3. Quiescent Current vs Temperature

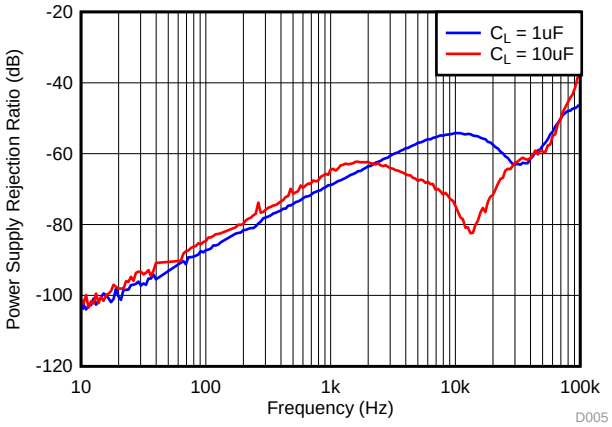

Figure 4. Power-Supply Rejection Ratio vs Frequency

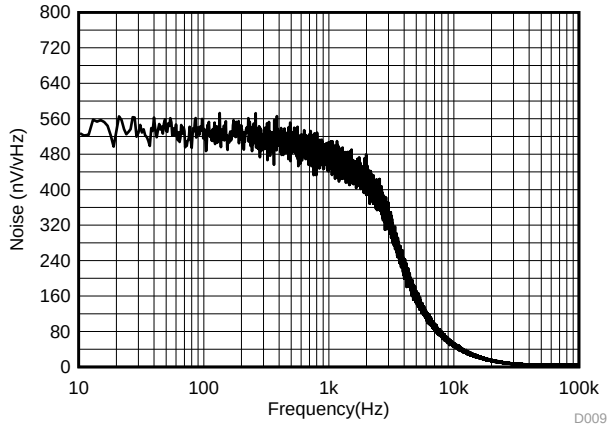

Figure 5. Noise Performance 10 Hz to 10 kHz

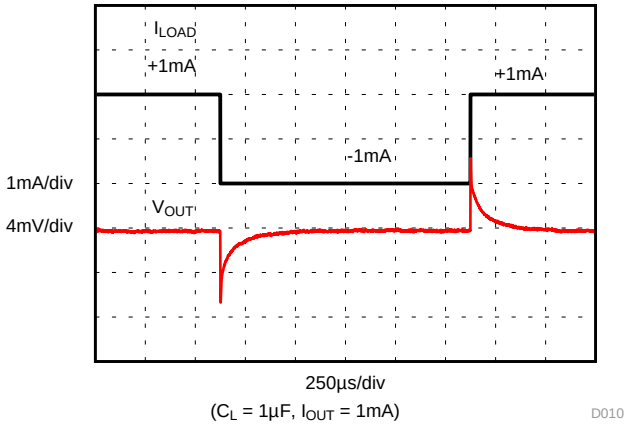

Figure 6. Load Transient

Typical Characteristics (continued)

at T_A = 25°C, V_{IN} = V_{EN} = 12 V, I_L = 0 mA , C_L = 10 µF, C_{IN} = 0.1 µF (unless otherwise noted)

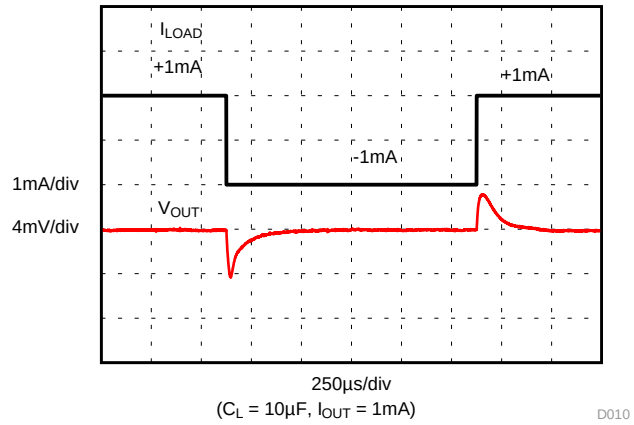

Figure 7. Load Transient

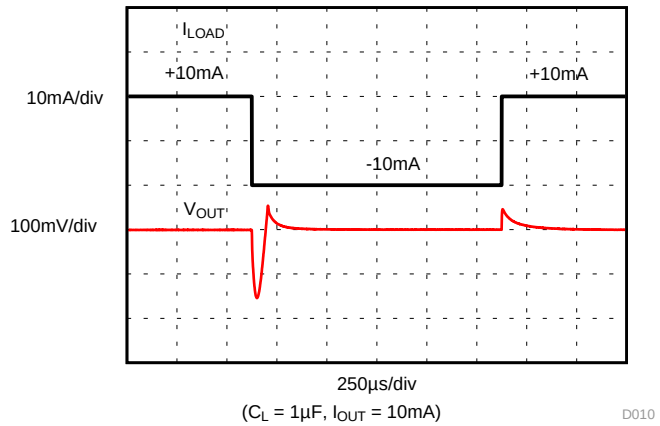

Figure 8. Load Transient

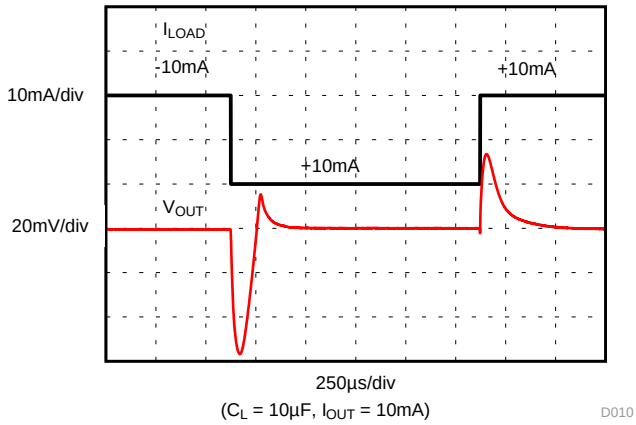

Figure 9. Load Transient

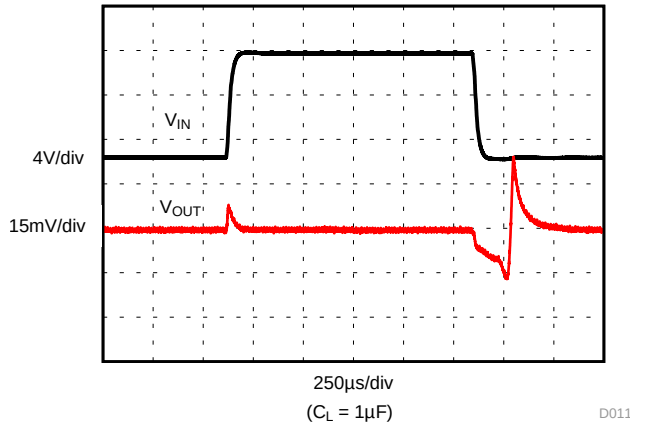

Figure 10. Line Transient

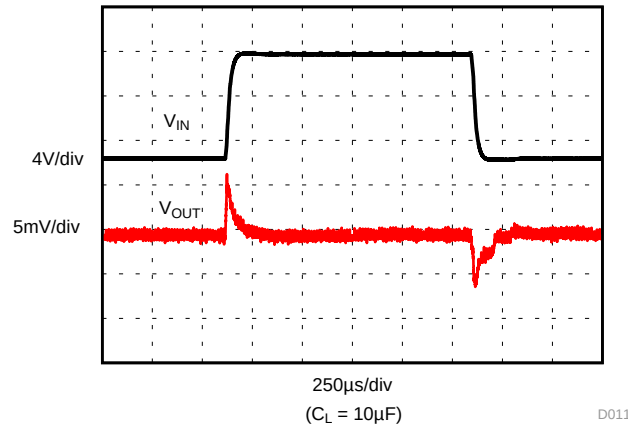

Figure 11. Line Transient

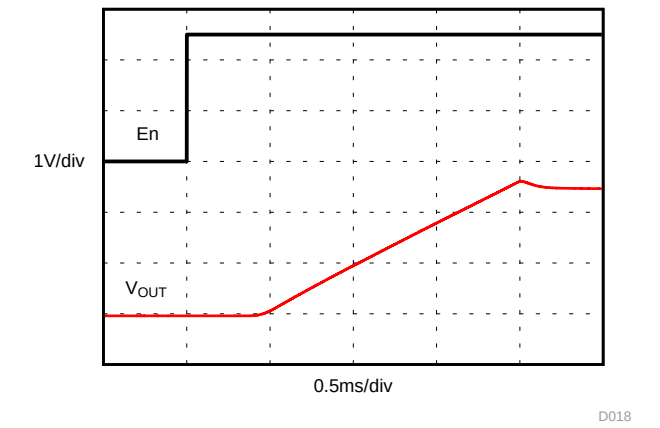

Figure 12. Start-Up

Copyright © 2017, Texas Instruments Incorporated

Typical Characteristics (continued)

at T_A = 25°C, V_{IN} = V_{EN} = 12 V, I_L = 0 mA , C_L = 10 µF, C_{IN} = 0.1 µF (unless otherwise noted)

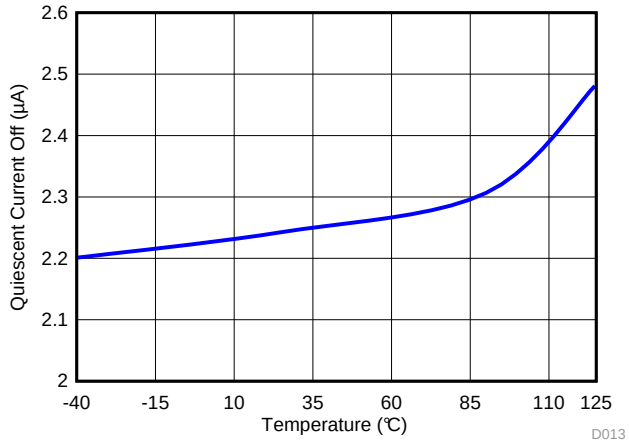

Figure 13. Quiescent Current Shutdown Mode

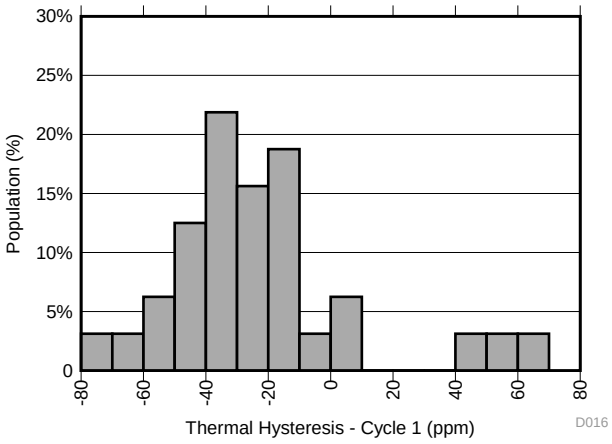

Figure 14. Thermal Hysteresis Distribution (Cycle 1)

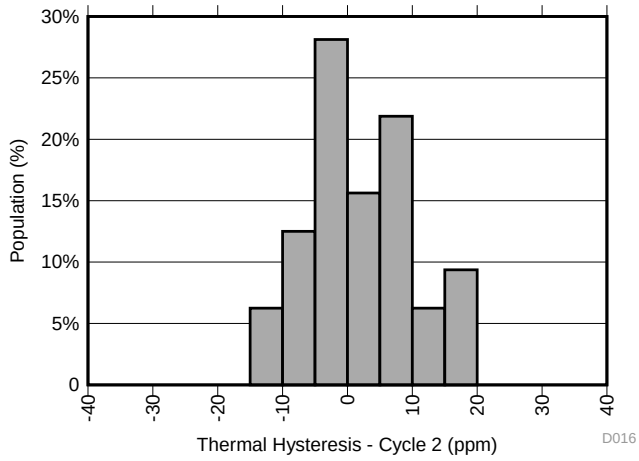

Figure 15. Thermal Hysteresis Distribution (Cycle 2)

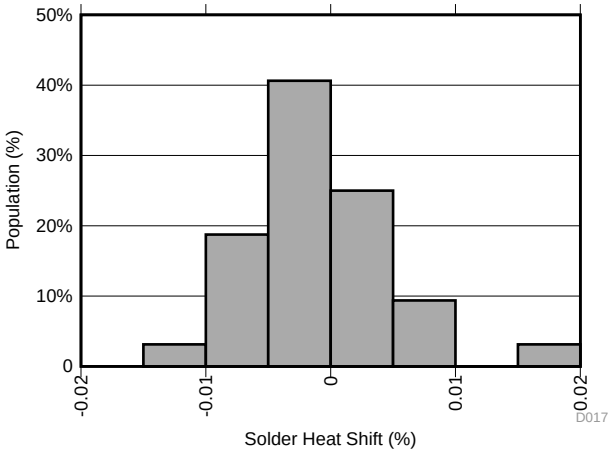

Refer to *Solder Heat Shift* for more information

Figure 16. Solder Heat Shift Distribution

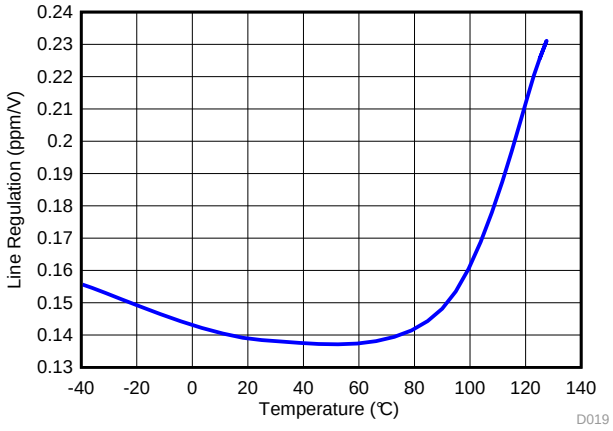

Figure 17. Line Regulation

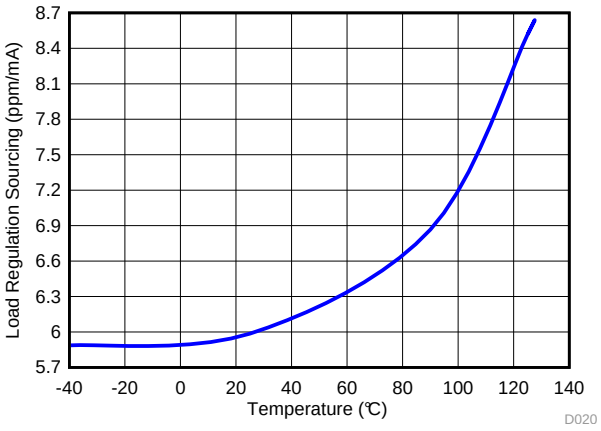

Figure 18. Load Regulation Sourcing

Typical Characteristics (continued)

at T_A = 25°C, V_{IN} = V_{EN} = 12 V, I_L = 0 mA , C_L = 10 µF, C_{IN} = 0.1 µF (unless otherwise noted)

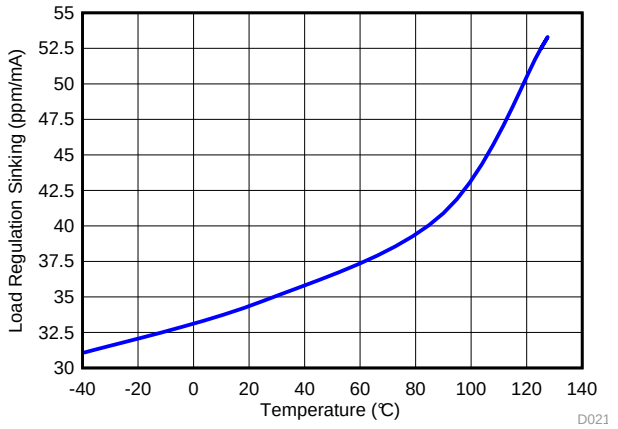

Figure 19. Load Regulation Sinking

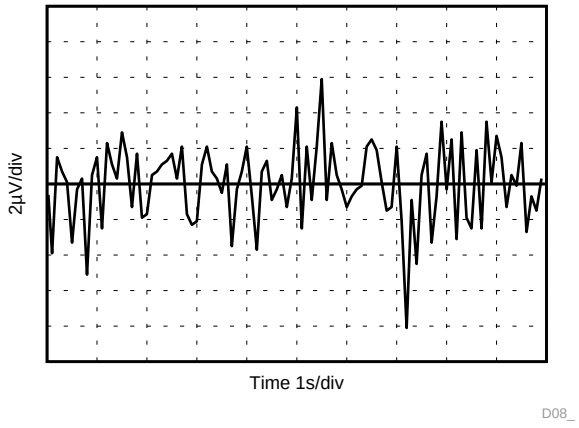

Figure 20. 0.1-Hz to 10-Hz Noise (V_{REF})

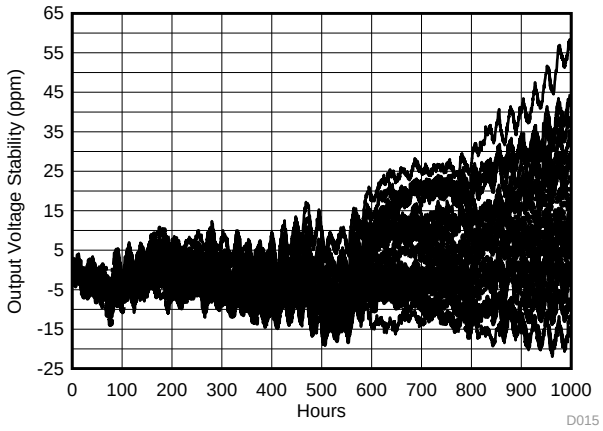

Figure 21. Long Term Stability - 1000 hours (V_{REF})

Copyright © 2017, Texas Instruments Incorporated

7 Parameter Measurement Information

7.1 Solder Heat Shift

The materials used in the manufacture of the REF2125 have differing coefficients of thermal expansion, resulting in stress on the device die when the part is heated. Mechanical and thermal stress on the device die can cause the output voltages to shift, degrading the initial accuracy specifications of the product. Reflow soldering is a common cause of this error.

In order to illustrate this effect, a total of 32 devices were soldered on four printed circuit boards [16 devices on each printed circuit board (PCB)] using lead-free solder paste and the paste manufacturer suggested reflow profile. The reflow profile is as shown in Figure 22. The printed circuit board is comprised of FR4 material. The board thickness is 1.65 mm and the area is 114 mm × 152 mm.

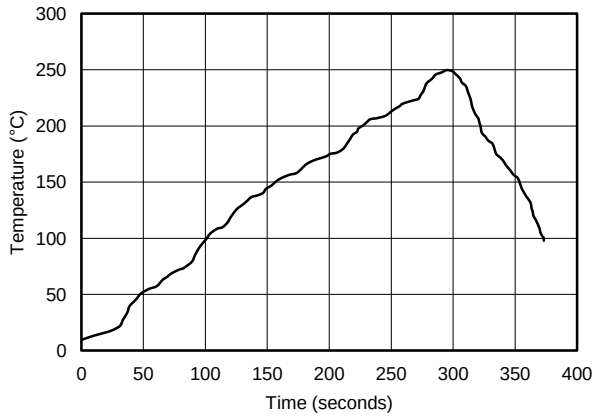

Figure 22. Reflow Profile

The reference and bias output voltages are measured before and after the reflow process; the typical shift is displayed in Figure 23. Although all tested units exhibit very low shifts (< 0.01%), higher shifts are also possible depending on the size, thickness, and material of the printed circuit board. An important note is that the histograms display the typical shift for exposure to a single reflow profile. Exposure to multiple reflows, as is common on PCBs with surface-mount components on both sides, causes additional shifts in the output bias voltage. If the PCB is exposed to multiple reflows, solder the device in the second pass to minimize its exposure to thermal stress.

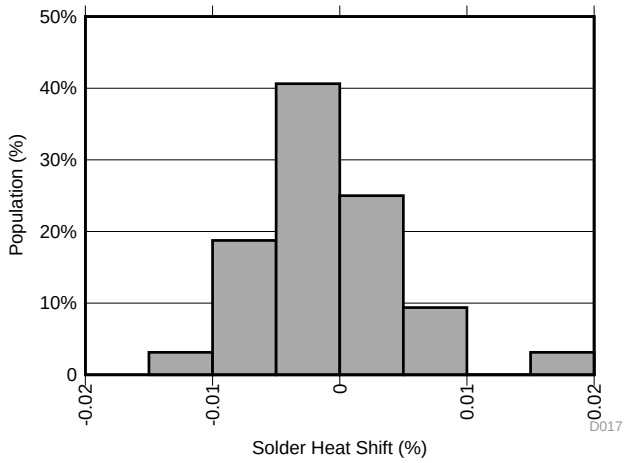

Figure 23. Solder Heat Shift Distribution, V_{REF} (%)

7.2 Long-Term Stability

One of the key parameters of the REF2125 reference is long-term stability. Typical characteristic expressed as: curves shows the typical drift value for the REF2125 is 30 ppm from 0 to 1000 hours. This parameter is characterized by measuring 32 units at regular intervals for a period of 1000 hours. It is important to understand that long-term stability is not ensured by design and that the output from the device may shift beyond the typical 30 ppm specification at any time. For systems that require highly stable output voltages over long periods of time, the designer should consider burning in the devices prior to use to minimize the amount of output drift exhibited by the reference over time

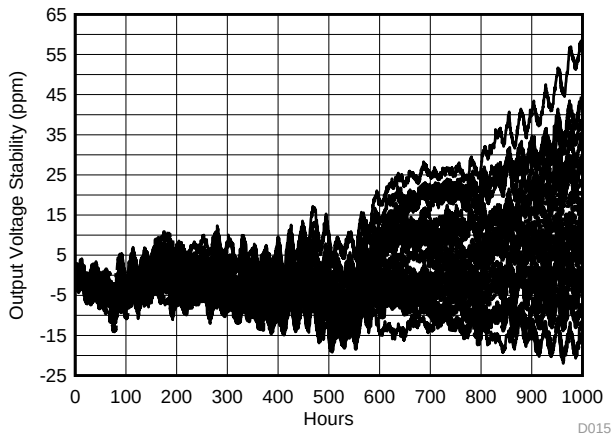

Figure 24. Long Term Stability - 1000 hours (V_{REF})

7.3 Thermal Hysteresis

Thermal hysteresis is measured with the REF2125 soldered to a PCB, similar to a real-world application. Thermal hysteresis for the device is defined as the change in output voltage after operating the device at 25°C, cycling the device through the specified temperature range, and returning to 25°C. Hysteresis can be expressed by Equation 1:

$$V_{HYST} = \left(\frac{| V_{PRE} - V_{POST} |}{V_{NOM}} \right) \times 10^6 \text{ (ppm)} \quad (1)$$

where

- V_{HYST} = thermal hysteresis (in units of ppm)
- V_{NOM} = the specified output voltage
- V_{PRE} = output voltage measured at 25°C pre-temperature cycling
- V_{POST} = output voltage measured after the device has cycled from 25°C through the specified temperature range of –40°C to +125°C and returns to 25°C.

Typical thermal hysteresis distribution is as shown in Figure 25.

Copyright © 2017, Texas Instruments Incorporated

Thermal Hysteresis (continued)

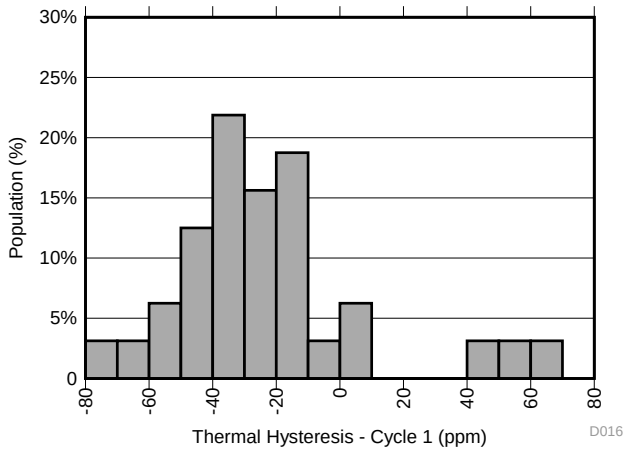

Figure 25. Thermal Hysteresis Distribution (V_{REF})

7.4 Power Dissipation

The REF2125 voltage reference is capable of source and sink up to 10 mA of load current across the rated input voltage range. However, when used in applications subject to high ambient temperatures, the input voltage and load current must be carefully monitored to ensure that the device does not exceeded its maximum power dissipation rating. The maximum power dissipation of the device can be calculated with Equation 2:

$$T_J = T_A + P_D \times R_{\theta JA}$$

where

- P_D is the device power dissipation
- T_J is the device junction temperature
- T_A is the ambient temperature
- $R_{\theta JA}$ is the package (junction-to-air) thermal resistance (2)

Because of this relationship, acceptable load current in high temperature conditions may be less than the maximum current-sourcing capability of the device. In no case should the part be operated outside of its maximum power rating because doing so can result in premature failure or permanent damage to the device.

Copyright © 2017, Texas Instruments Incorporated

7.5 Noise Performance

Typical 0.1-Hz to 10-Hz voltage noise can be seen in Figure 26 . Device noise increases with output voltage and operating temperature. Additional filtering can be used to improve output noise levels, although care must be taken to ensure the output impedance does not degrade ac performance. Peak-to-peak noise measurement setup is shown in Figure 26.

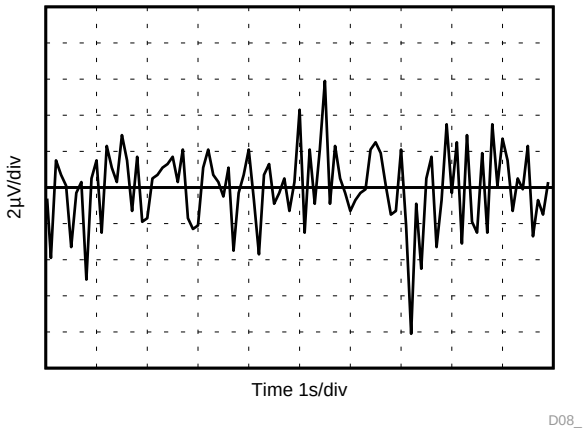

Figure 26. 0.1-Hz to 10-Hz Noise (V_{REF})

Copyright © 2017, Texas Instruments Incorporated

8 Detailed Description

8.1 Overview

The REF2125 is part of a family of low-noise, precision bandgap voltage references that are specifically designed for excellent initial voltage accuracy and drift. The *Functional Block Diagram* is a simplified block diagram of the REF2125 showing basic band-gap topology.

8.2 Functional Block Diagram

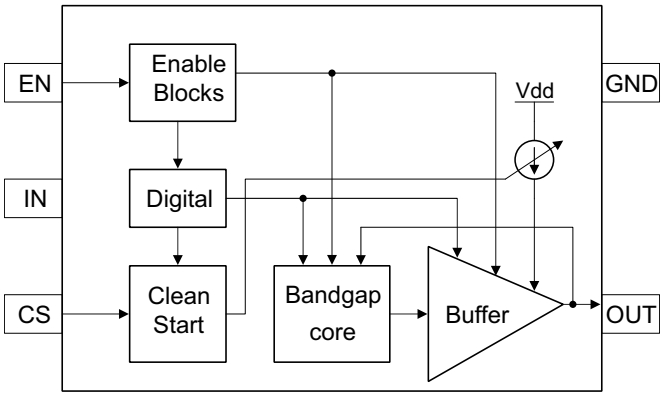

Copyright © 2017, Texas Instruments Incorporated

8.3 Feature Description

8.3.1 Supply Voltage

The REF2125 family of references features an extremely low dropout voltage. The REF2125 can be operated with a supply of only 1 mV above the output voltage in an unloaded condition. For loaded conditions, a typical dropout voltage versus load is shown on the front page. The REF2125 features a low quiescent current that is extremely stable over changes in both temperature and supply. The typical room temperature quiescent current is 72 µA, and the maximum quiescent current over temperature is just 95 µA. Supply voltages below the specified levels can cause the REF2125 to momentarily draw currents greater than the typical quiescent current. Use a power supply with a fast rising edge and low output impedance to easily prevent this issue.

8.3.2 Low Temperature Drift

The REF2125 is designed for minimal drift error, which is defined as the change in output voltage over temperature. The drift is calculated using the box method, as described by Equation 3:

$$\text{Drift} = \left(\frac{V_{REF(MAX)} - V_{REF(MIN)}}{V_{REF} \times \text{Temperature Range}}\right) \times 10^6 \tag{3}$$

8.3.3 Load Current

The REF2125 family is specified to deliver a current load of ±10 mA per output. The V_{REF} output of the device are protected from short circuits by limiting the output short-circuit current to 18 mA. The device temperature increases according to Equation 4:

$$T_J = T_A + P_D \times R_{\theta JA}$$

where

- T_J = junction temperature (°C),
- T_A = ambient temperature (°C),
- P_D = power dissipated (W), and
- $R_{\theta JA}$ = junction-to-ambient thermal resistance (°C/W) (4)

The REF2125 maximum junction temperature must not exceed the absolute maximum rating of 150°C.

Feature Description (continued)

8.3.4 Clean Start Feature

In many applications (for example, loop powered applications), the supply at VIN has inductive impedance. This can cause the supply to dip during start-up because of the large output capacitor connected to the voltage reference and the inductive supply. The REF2125 family has an internal clean start block to control the peak of the inrush current during start-up. This feature is illustrated in *Functional Block Diagram*. The peak of inrush current can be calculated as Equation 5:

$$I_{PEAK} \approx 466\mu A + 13.54\mu A \times R_{CS}$$

where

- I_{PEAK} = Peak of inrush current (µA), has a range of [0.5 mA, 19 mA],
- R_{cs} = External resistor connected to the CS pin (5)

During power up, I_{PEAK} is split between the device current and output current. The output current (I_{OUT}) is split between output capacitor and load current (I_{LOAD}). The device current can be estimated to be I_Q+I_{OUT}/183, where I_Q is quiescent current at no load. Hence for a given I_{LOAD} it is important to choose R_{cs} such that I_{PEAK} is larger than I_{LOAD}. Above equations capture typical characteristics and hence it is suggested to include ±25% margins while budgeting for inrush current and also while choosing R_{cs} for a given I_{LOAD}. This inrush current continues to stay at the limiting value (I_{PEAK}) till output reaches close to V_{REF} (2.5 V).

When a C_{cs} is also connected in parallel to R_{cs}, The inrush current limit shall rise exponentially to the steady state value (I_{PEAK}) as calculated using above equations, with a time constant of R_{cs} × C_{cs}. Hence the initial (and maximum) rate of rise of inrush current shall be I_{PEAK} /(R_{cs} × C_{cs}). Because the inrush current rate is limited, the loop powered supply dip is controlled.

8.4 Device Functional Modes

8.4.1 EN Pin

When the ENABLE pin of the REF2125 is pulled high, the device is in active mode. The device must be in active mode for normal operation. The REF2125 can be placed in a low-power mode by pulling the ENABLE pin low. When in shutdown mode, the output of the device becomes high impedance and the quiescent current of the device reduces to 2 µA in shutdown mode. The EN pin must not be pulled higher than VIN supply voltage. See the *Thermal Information* for logic high and logic low voltage levels.

8.4.2 Negative Reference Voltage

For applications requiring a negative and positive reference voltage, the REF2125 and OPA735 can be used to provide a dual-supply reference from a 5-V supply. Figure 27 shows the REF2125 used to provide a 2.5-V supply reference voltage. The low drift performance of the REF2125 complements the low offset voltage and zero drift of the OPA735 to provide an accurate solution for split-supply applications. Take care to match the temperature coefficients of R1 and R2.

Copyright © 2017, Texas Instruments Incorporated

Device Functional Modes (continued)

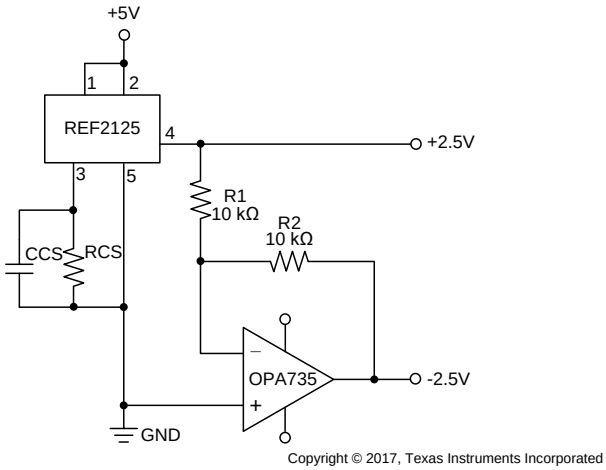

Figure 27. REF2125 and OPA735 Create Positive and Negative Reference Voltages

9 Applications and Implementation

NOTE

Information in the following applications sections is not part of the TI component specification, and TI does not warrant its accuracy or completeness. TI's customers are responsible for determining suitability of components for their purposes. Customers should validate and test their design implementation to confirm system functionality.

9.1 Application Information

As this device has many applications and setups, there are many situations that this datasheet can not characterize in detail. Basic applications includes positive/negative voltage reference and data acquisition systems. For more information see application sections in the REF32xx data sheet.

9.2 Typical Application: Basic Voltage Reference Connection

The circuit shown in Figure 28 shows the basic configuration for the REF2125 references. Connect bypass capacitors according to the guidelines in *Input and Output Capacitors*.

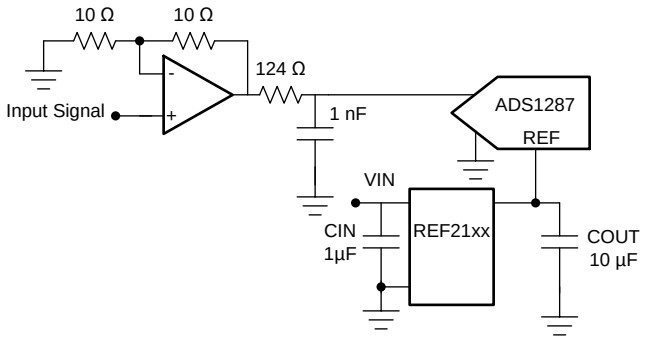

Copyright © 2017, Texas Instruments Incorporated

Figure 28. Basic Reference Connection

9.2.1 Design Requirements

A detailed design procedure is described based on a design example. For this design example, use the parameters listed in Table 1 as the input parameters.

Table 1. Design Example Parameters

DESIGN PARAMETER	VALUE
Input voltage V_{IN}	5 V
Output voltage V_{OUT}	2.5 V
REF2125 input capacitor	1 µF
REF2125 output capacitor	10 µF

9.2.2 Detailed Design Procedure

9.2.2.1 Input and Output Capacitors

A 1-µF to 10-µF electrolytic or ceramic capacitor can be connected to the input to improve transient response in applications where the supply voltage may fluctuate. Connect an additional 0.1-µF ceramic capacitor in parallel to reduce high frequency supply noise.

A ceramic capacitor of at least 0.1 µF must be connected to the output to improve stability and help filter out high frequency noise. An additional 1-µF to 10-µF electrolytic or ceramic capacitor can be added in parallel to improve transient performance in response to sudden changes in load current; however, keep in mind that doing so increases the turnon time of the device.

Copyright © 2017, Texas Instruments Incorporated

Best performance and stability is attained with low-ESR, low-inductance ceramic chip-type output capacitors (X5R, X7R, or similar). If using an electrolytic capacitor on the output, place a 0.1-µF ceramic capacitor in parallel to reduce overall ESR on the output.

9.2.2.2 V_{IN} Slew Rate Considerations

In applications with slow-rising input voltage signals, the reference exhibits overshoot or other transient anomalies that appear on the output. These phenomena also appear during shutdown as the internal circuitry loses power.

To avoid such conditions, ensure that the input voltage wave-form has both a rising and falling slew rate close to 6 V/ms.

9.2.2.3 Shutdown/Enable Feature

The REF2125 references can be switched to a low power shut-down mode when a voltage of 0.5 V or lower is input to the ENABLE pin. Likewise, the reference becomes operational for ENABLE voltages of 1.6 V or higher. During shutdown, the supply current drops to less than 2 µA, useful in applications that are sensitive to power consumption.

If using the shutdown feature, ensure that the ENABLE pin voltage does not fall between 0.5 V and 1.6 V because this causes a large increase in the supply current of the device and may keep the reference from starting up correctly. If not using the shutdown feature, however, the ENABLE pin can simply be tied to the IN pin, and the reference remains operational continuously.

9.2.3 Application Curves

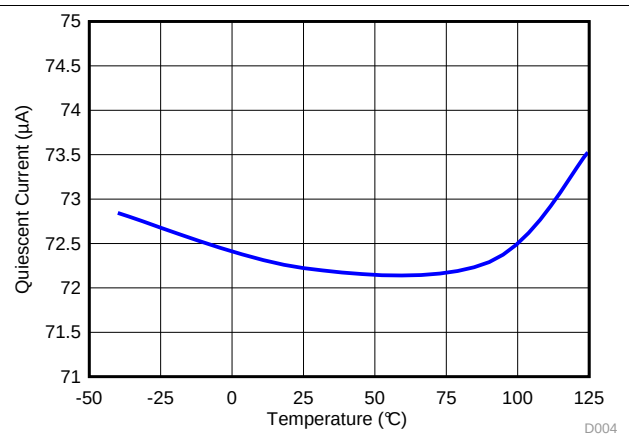

Figure 29. Quiescent Current vs Temperature

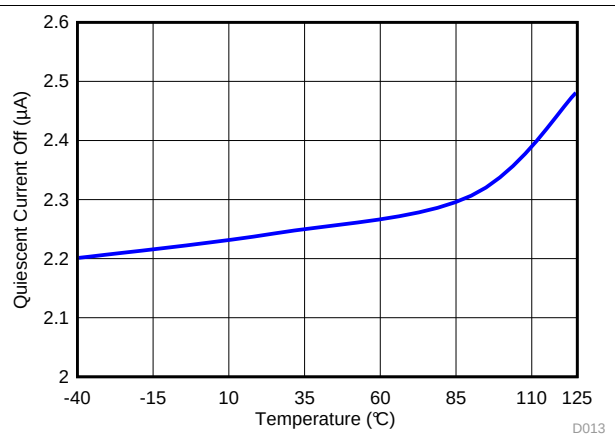

Figure 30. Quiescent Current Shutdown Mode

10 Power-Supply Recommendations

The REF2125 family of references feature an extremely low-dropout voltage. These references can be operated with a supply of only 50 mV above the output voltage. TI recommends a supply bypass capacitor ranging between 0.1 µF to 10 µF.

Copyright © 2017, Texas Instruments Incorporated

11 Layout

11.1 Layout Guidelines

Figure 31 illustrates an example of a PCB layout for a data acquisition system using the REF2125. Some key considerations are:

- Connect low-ESR, 0.1-µF ceramic bypass capacitors at V_{IN}, V_{REF} of the REF2125.
- Decouple other active devices in the system per the device specifications.
- Using a solid ground plane helps distribute heat and reduces electromagnetic interference (EMI) noise pickup.
- Place the external components as close to the device as possible. This configuration prevents parasitic errors (such as the Seebeck effect) from occurring.
- Do not run sensitive analog traces in parallel with digital traces. Avoid crossing digital and analog traces if possible, and only make perpendicular crossings when absolutely necessary.

11.2 Layout Example

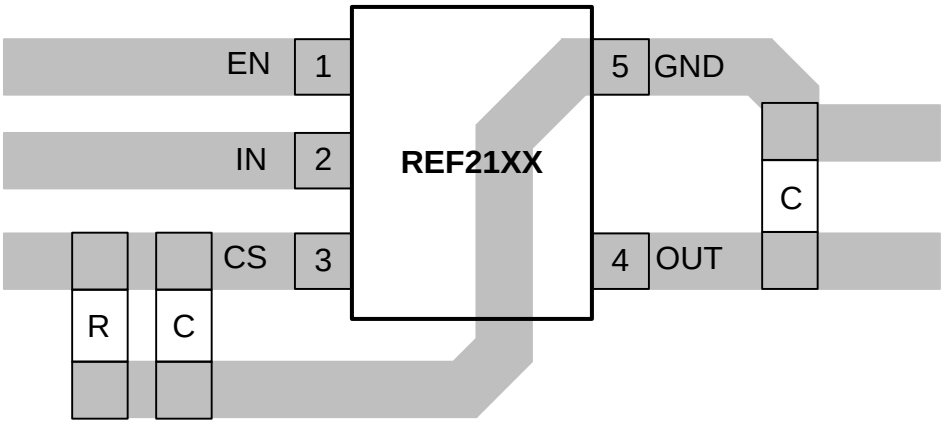

Figure 31. Layout Example

Copyright © 2017, Texas Instruments Incorporated

12 デバイスおよびドキュメントのサポート

12.1 ドキュメントのサポート

12.1.1 関連資料

関連資料については、以下を参照してください。

- *『INA21x 電圧出力、ロー/ハイサイド測定、双方向、ゼロドリフト・シリーズ、電流シャント・モニタ』*
- *『低ドリフト、双方向、単一電源のローサイド電流センスに関するリファレンス・デザイン』*

12.2 ドキュメントの更新通知を受け取る方法

ドキュメントの更新についての通知を受け取るには、ti.comのデバイス製品フォルダを開いてください。右上の隅にある「*通知を受け取る*」をクリックして登録すると、変更されたすべての製品情報に関するダイジェストを毎週受け取れます。変更の詳細については、修正されたドキュメントに含まれている改訂履歴をご覧ください。

12.3 コミュニティ・リソース

The following links connect to TI community resources. Linked contents are provided "AS IS" by the respective contributors. They do not constitute TI specifications and do not necessarily reflect TI's views; see TI's Terms of Use.

TI E2E™オンライン・コミュニティ ***TIのE2E（Engineer-to-Engineer）コミュニティ。*** エンジニア間の共同作業を促進するために開設されたものです。e2e.ti.comでは、他のエンジニアに質問し、知識を共有し、アイディアを検討して、問題解決に役立てることができます。

設計サポート ***TIの設計サポート*** 役に立つE2Eフォーラムや、設計サポート・ツールをすばやく見つけることができます。技術サポート用の連絡先情報も参照できます。

12.4 商標

E2E is a trademark of Texas Instruments.

12.5 静電気放電に関する注意事項

すべての集積回路は、適切なESD保護方法を用いて、取扱いと保存を行うようにして下さい。

静電気放電はわずかな性能の低下から完全なデバイスの故障に至るまで、様々な損傷を与えます。高精度の集積回路は、損傷に対して敏感であり、極めてわずかなパラメータの変化により、デバイスに規定された仕様に適合しなくなる場合があります。

12.6 Glossary

SLYZ022 — *TI Glossary*.

This glossary lists and explains terms, acronyms, and definitions.

13 メカニカル、パッケージ、および注文情報

以降のページには、メカニカル、パッケージ、および注文に関する情報が記載されています。これらの情報は、指定のデバイスに対して提供されている最新のデータです。このデータは予告なく変更されることがあり、ドキュメントが改訂される場合もあります。本データシートのブラウザ版を使用されている場合は、画面左側の説明をご覧ください。

PACKAGING INFORMATION

Orderable part number	Status (1)	Material type (2)	Package | Pins	Package qty | Carrier	RoHS (3)	Lead finish/ Ball material (4)	MSL rating/ Peak reflow (5)	Op temp (°C)	Part marking (6)
REF2125IDBVR	Active	Production	SOT-23 (DBV) | 5	3000 | LARGE T&R	Yes	NIPDAU	Level-2-260C-1 YEAR	-40 to 125	19DD
REF2125IDBVR.B	Active	Production	SOT-23 (DBV) | 5	3000 | LARGE T&R	Yes	NIPDAU	Level-2-260C-1 YEAR	-40 to 125	19DD

(1) **Status:** For more details on status, see our product life cycle.

(2) **Material type:** When designated, preproduction parts are prototypes/experimental devices, and are not yet approved or released for full production. Testing and final process, including without limitation quality assurance, reliability performance testing, and/or process qualification, may not yet be complete, and this item is subject to further changes or possible discontinuation. If available for ordering, purchases will be subject to an additional waiver at checkout, and are intended for early internal evaluation purposes only. These items are sold without warranties of any kind.

(3) **RoHS values:** Yes, No, RoHS Exempt. See the TI RoHS Statement for additional information and value definition.

(4) **Lead finish/Ball material:** Parts may have multiple material finish options. Finish options are separated by a vertical ruled line. Lead finish/Ball material values may wrap to two lines if the finish value exceeds the maximum column width.

(5) **MSL rating/Peak reflow:** The moisture sensitivity level ratings and peak solder (reflow) temperatures. In the event that a part has multiple moisture sensitivity ratings, only the lowest level per JEDEC standards is shown. Refer to the shipping label for the actual reflow temperature that will be used to mount the part to the printed circuit board.

(6) **Part marking:** There may be an additional marking, which relates to the logo, the lot trace code information, or the environmental category of the part.

Multiple part markings will be inside parentheses. Only one part marking contained in parentheses and separated by a "~" will appear on a part. If a line is indented then it is a continuation of the previous line and the two combined represent the entire part marking for that device.

Important Information and Disclaimer: The information provided on this page represents TI's knowledge and belief as of the date that it is provided. TI bases its knowledge and belief on information provided by third parties, and makes no representation or warranty as to the accuracy of such information. Efforts are underway to better integrate information from third parties. TI has taken and continues to take reasonable steps to provide representative and accurate information but may not have conducted destructive testing or chemical analysis on incoming materials and chemicals. TI and TI suppliers consider certain information to be proprietary, and thus CAS numbers and other limited information may not be available for release.

In no event shall TI's liability arising out of such information exceed the total purchase price of the TI part(s) at issue in this document sold by TI to Customer on an annual basis.

TAPE AND REEL INFORMATION

REEL DIMENSIONS

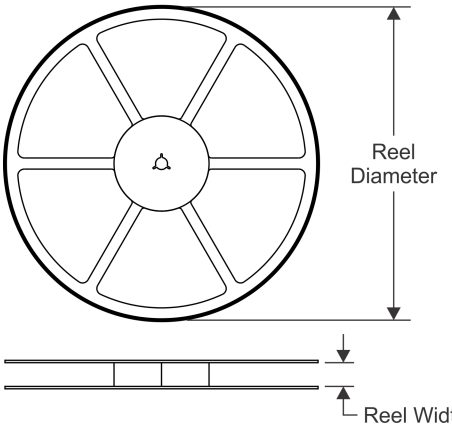

TAPE DIMENSIONS

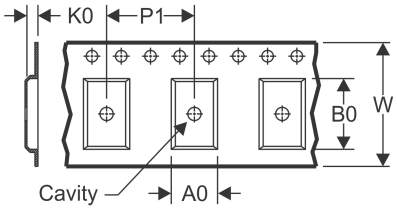

A0	Dimension designed to accommodate the component width
B0	Dimension designed to accommodate the component length
K0	Dimension designed to accommodate the component thickness
W	Overall width of the carrier tape
P1	Pitch between successive cavity centers

QUADRANT ASSIGNMENTS FOR PIN 1 ORIENTATION IN TAPE

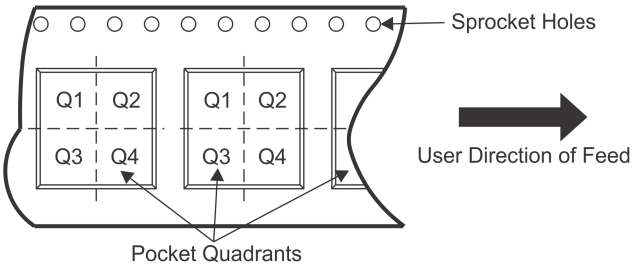

*All dimensions are nominal

Device	Package Type	Package Drawing	Pins	SPQ	Reel Diameter (mm)	Reel Width W1 (mm)	A0 (mm)	B0 (mm)	K0 (mm)	P1 (mm)	W (mm)	Pin1 Quadrant
REF2125IDBVR	SOT-23	DBV	5	3000	178.0	9.0	3.23	3.17	1.37	4.0	8.0	Q3

TAPE AND REEL BOX DIMENSIONS

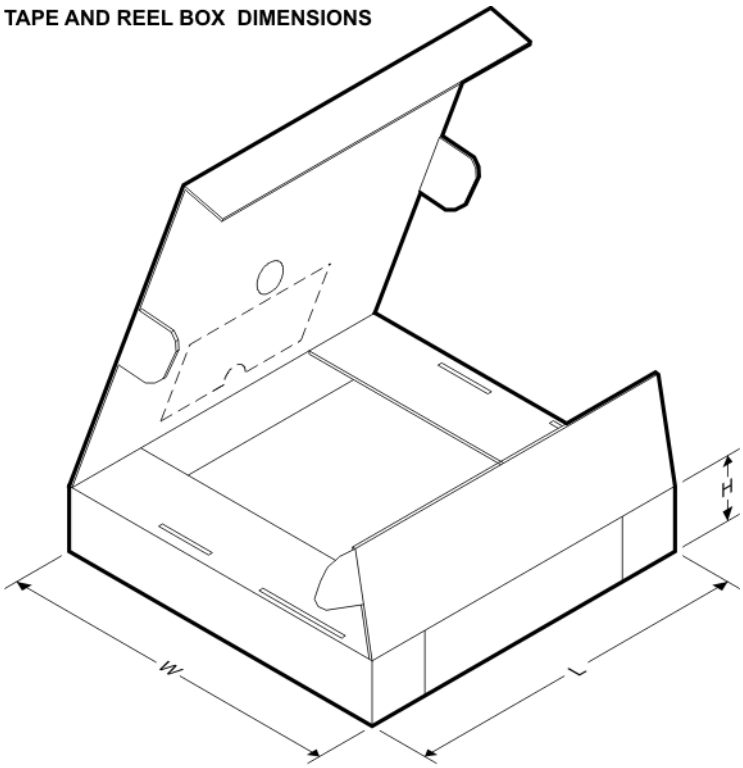

*All dimensions are nominal

Device	Package Type	Package Drawing	Pins	SPQ	Length (mm)	Width (mm)	Height (mm)
REF2125IDBVR	SOT-23	DBV	5	3000	445.0	220.0	345.0

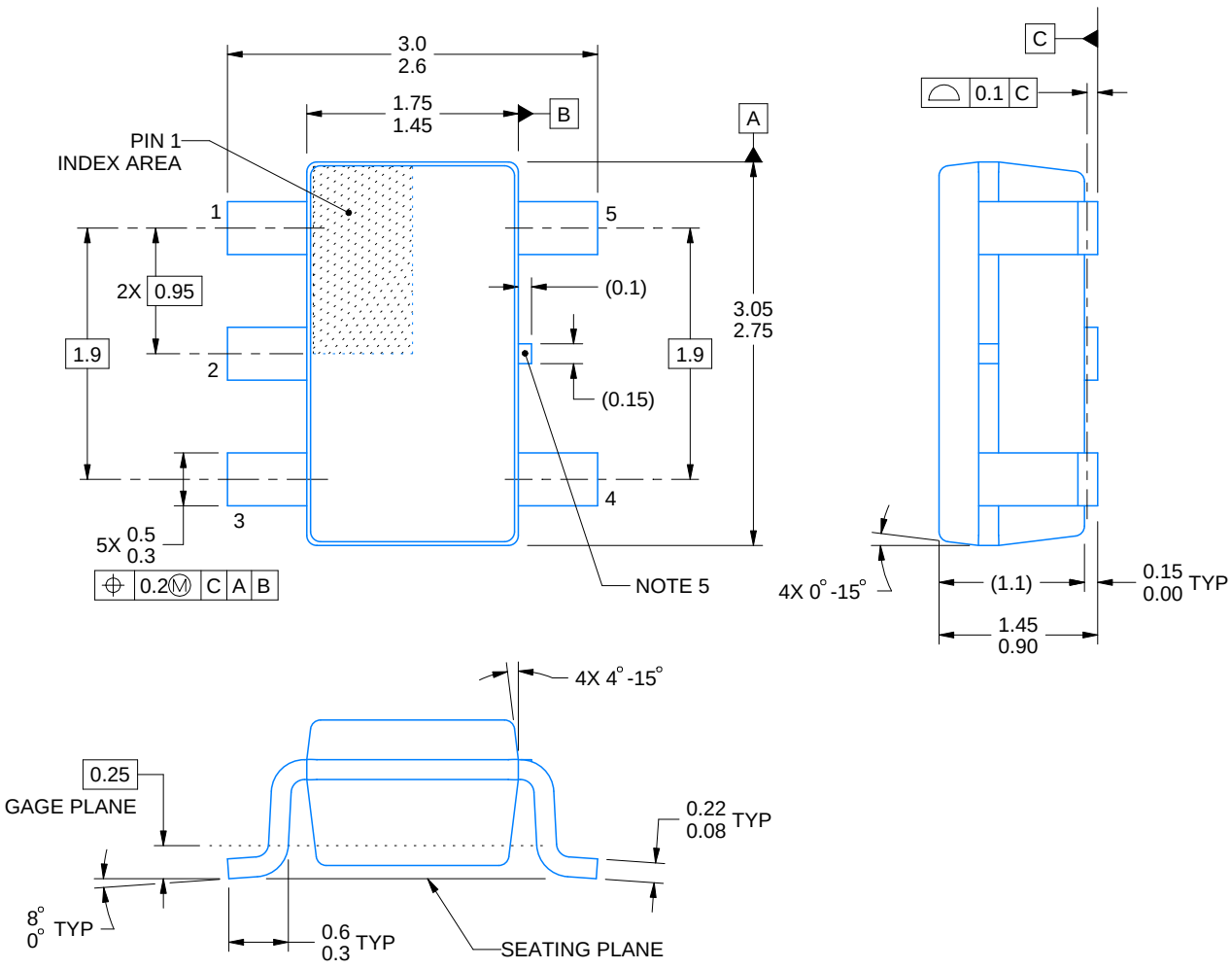

4214839/K 08/2024

NOTES:

1. All linear dimensions are in millimeters. Any dimensions in parenthesis are for reference only. Dimensioning and tolerancing per ASME Y14.5M.
2. This drawing is subject to change without notice.
3. Refernce JEDEC MO-178.
4. Body dimensions do not include mold flash, protrusions, or gate burrs. Mold flash, protrusions, or gate burrs shall not exceed 0.25 mm per side.
5. Support pin may differ or may not be present.

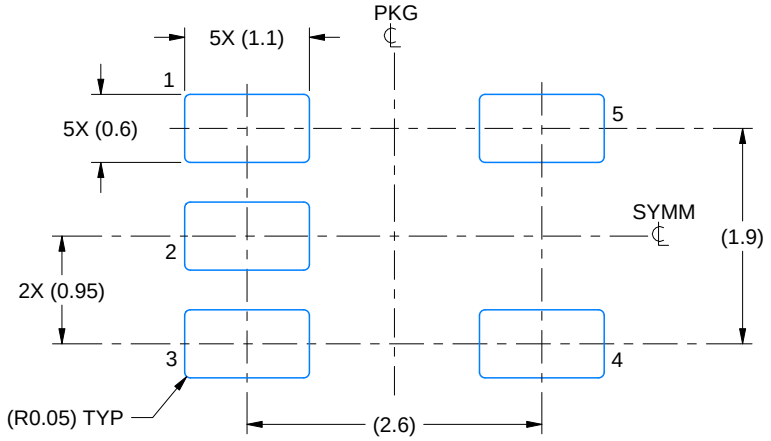

LAND PATTERN EXAMPLE
EXPOSED METAL SHOWN
SCALE:15X

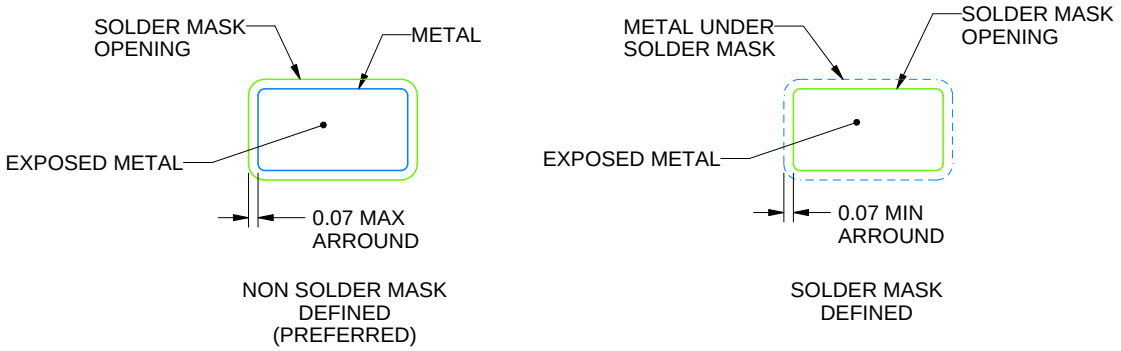

SOLDER MASK DETAILS

4214839/K 08/2024

NOTES: (continued)

6. Publication IPC-7351 may have alternate designs.
7. Solder mask tolerances between and around signal pads can vary based on board fabrication site.

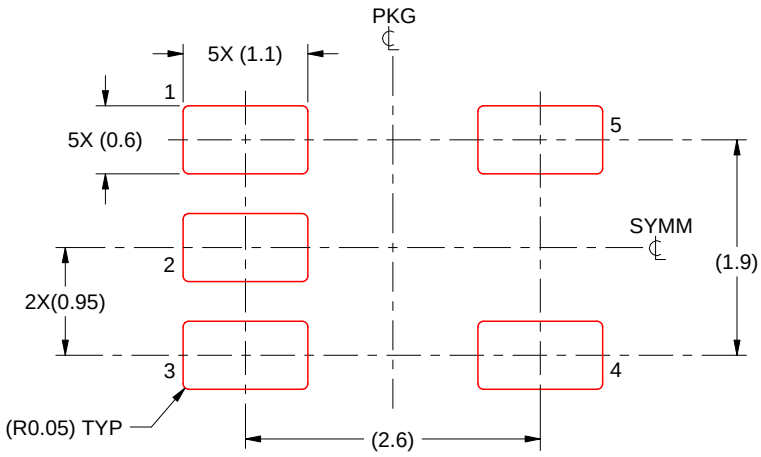

SOLDER PASTE EXAMPLE
BASED ON 0.125 mm THICK STENCIL
SCALE:15X

4214839/K 08/2024

NOTES: (continued)

8. Laser cutting apertures with trapezoidal walls and rounded corners may offer better paste release. IPC-7525 may have alternate design recommendations.
9. Board assembly site may have different recommendations for stencil design.

重要なお知らせと免責事項

テキサス· インスツルメンツは、技術データと信頼性データ (データシートを含みます)、設計リソース (リファレンス デザインを含みます)、アプリケーションや設計に関する各種アドバイス、Web ツール、安全性情報、その他のリソースを、欠陥が存在する可能性のある「現状のまま」提供しており、商品性および特定目的に対する適合性の黙示保証、第三者の知的財産権の非侵害保証を含むいかなる保証も、明示的または黙示的にかかわらず拒否します。

これらのリソースは、 テキサス· インスツルメンツ製品を使用する設計の経験を積んだ開発者への提供を意図したものです。(1) お客様のアプリケーションに適した テキサス· インスツルメンツ製品の選定、(2) お客様のアプリケーションの設計、検証、試験、(3) お客様のアプリケーションに該当する各種規格や、その他のあらゆる安全性、セキュリティ、規制、または他の要件への確実な適合に関する責任を、お客様のみが単独で負うものとします。

上記の各種リソースは、予告なく変更される可能性があります。これらのリソースは、リソースで説明されている テキサス· インスツルメンツ製品を使用するアプリケーションの開発の目的でのみ、 テキサス· インスツルメンツはその使用をお客様に許諾します。これらのリソースに関して、他の目的で複製することや掲載することは禁止されています。 テキサス· インスツルメンツや第三者の知的財産権のライセンスが付与されている訳ではありません。お客様は、これらのリソースを自身で使用した結果発生するあらゆる申し立て、損害、費用、損失、責任について、 テキサス· インスツルメンツおよびその代理人を完全に補償するものとし、 テキサス· インスツルメンツは一切の責任を拒否します。

テキサス· インスツルメンツの製品は、 テキサス· インスツルメンツの販売条件、または ti.com やかかる テキサス· インスツルメンツ製品の関連資料などのいずれかを通じて提供する適用可能な条項の下で提供されています。 テキサス· インスツルメンツがこれらのリソースを提供することは、適用される テキサス· インスツルメンツの保証または他の保証の放棄の拡大や変更を意味するものではありません。

お客様がいかなる追加条項または代替条項を提案した場合でも、 テキサス· インスツルメンツはそれらに異議を唱え、拒否します。

郵送先住所：Texas Instruments, Post Office Box 655303, Dallas, Texas 75265
Copyright © 2025, Texas Instruments Incorporated