MSP430FR235x、MSP430FR215x ミクスト・シグナル・マイクロコントローラ

1 デバイスの概要

1.1 特長

- 組み込みマイクロコントローラ
  - 最高 24MHz の 16 ビット RISC アーキテクチャ
  - 拡張温度範囲:-40°C～105°C
  - 3.6V から最小 1.8V までの広い電源電圧範囲 (動作電圧は SVS レベルで制限されます。「*PMM、SVS、BOR*」の V_{SVSH-} と V_{SVSH+} を参照)
- 最適化された低消費電力モード (3V 時)
  - アクティブ・モード:142µA/MHz
  - スタンバイ
    - LPM3 で 32768Hz の水晶発振器を使用:1.43µA (SVS 有効)
    - LPM3.5 で 32768Hz の水晶発振器を使用:620nA (SVS 有効)
  - シャットダウン (LPM4.5):42nA (SVS 無効)
- 低消費電力の強誘電体 RAM (FRAM)
  - 最大 32KB の不揮発性メモリ
  - エラー訂正コード (ECC) 搭載
  - 書き込み保護を設定可能
  - プログラム、定数、ストレージの統合メモリ
  - 書き込みサイクルの耐久性:10^{15} 回
  - 放射線耐性、非磁性
- 使いやすさ
  - ドライバ・ライブラリと FFT ライブラリを含む 20KB の ROM ライブラリ
- 高性能アナログ
  - 12 チャネル、12 ビットのアナログ/デジタル・コンバータ (ADC)×1
    - 内部共有基準電圧 (1.5、2.0、2.5V)
    - サンプル・アンド・ホールド 200ksps
  - 拡張コンパレータ (eCOMP)×2
    - 基準電圧として 6 ビットのデジタル/アナログ・コンバータ (DAC) を内蔵
    - プログラマブル・ヒステリシス
    - 構成可能な大消費電力モードと低消費電力モード
    - 1 つは高速な 100ns の応答時間
    - 1 つは応答時間 1µs、低消費電力 1.5µA
  - スマート・アナログ・コンボ (SAC-L3)×4 (MSP430FR235x デバイスのみ)
    - 汎用オペアンプ (OA) をサポート
    - レール・ツー・レールの入出力
    - 複数の入力選択
    - 構成可能な大消費電力モードと低消費電力モード
    - 構成可能な PGA モードをサポート
      - 非反転モード:×1、×2、×3、×5、×9、×17、×26、×33
      - 反転モード:×1、×2、×4、×8、×16、×25、×32
    - オフセットおよびバイアス設定用の 12 ビット基準電圧 DAC を内蔵
    - 12 ビット電圧 DAC モード、オプションの基準電圧付き
- インテリジェントなデジタル・ペリフェラル
  - 3 つのキャプチャ/比較レジスタを搭載した 16 ビット・タイマ (Timer_B3)×3
  - 7 つのキャプチャ/比較レジスタを搭載した 16 ビット・タイマ (Timer_B7)×1
  - 16 ビット RTC カウンタ (カウンタのみ)×1
  - 16 ビットの巡回冗長性検査 (CRC)
  - 割り込み比較コントローラ (ICC) によりハードウェア割り込みのネスト化を実現
  - 32 ビットのハードウェア乗算器 (MPY32)
  - マンチェスター・コーデック (MFM)
- 拡張シリアル通信
  - 2 つの拡張 USCI_A (eUSCI_A) モジュールで UART、IrDA、SPI をサポート
  - 2 つの拡張 USCI_B (eUSCI_B) モジュールで SPI および I^2C をサポート
- クロック・システム (CS)
  - オンチップの 32kHz RC 発振器 (REFO)
  - オンチップの 24MHz デジタル制御発振器 (DCO)、周波数ロック・ループ (FLL) 付き
    - オンチップの基準電圧は室温で ±1% 精度
  - オンチップの超低周波数 10kHz 発振器 (VLO)
  - オンチップの高周波数変調発振器 (MODOSC)
  - 外付けの 32kHz 水晶発振器 (LFXT)
  - 最大 24MHz の外付けの高周波数水晶発振器 (HFXT)
  - プログラム可能 (1～128) な MCLK プリスケーラ
  - プログラム可能 (1、2、4、8) なプリスケーラで MCLK から SMCLK を生成

英語版のTI製品についての情報を翻訳したこの資料は、製品の概要を確認する目的で便宜的に提供しているものです。該当する正式な英語版の最新情報は、www.ti.comで閲覧でき、その内容が常に優先されます。TIでは翻訳の正確性および妥当性につきましては一切保証いたしません。実際の設計などの前には、必ず最新版の英語版をご参照くださいますようお願いいたします。

- 汎用入出力およびピン機能
  - 48 ピンのパッケージに 44 の I/O を搭載
  - 32 の割り込みピン (P1、P2、P3、P4) により、MCU を LPM からウェイクアップ可能
- 開発ツールとソフトウェア(「ツールとソフトウェア」も参照)
  - LaunchPad™開発キット (MSP-EXP430FR2355)
  - ターゲット開発ボード (MSP-TS43048PT)
  - 無償のプロフェッショナル開発環境
- ファミリ・メンバー (「デバイスの比較」も参照)
  - MSP430FR2355:プログラム用 FRAM 32KB + データ用 FRAM 512B + RAM 4KB
  - MSP430FR2353:プログラム用 FRAM 16KB + データ用 FRAM 512B + RAM 2KB
  - MSP430FR2155:プログラム用 FRAM 32KB + データ用 FRAM 512B + RAM 4KB
  - MSP430FR2153: プログラム用 FRAM 16KB + データ用 FRAM 512B + RAM 2KB
- パッケージ・オプション
  - 48 ピン: LQFP (PT)
  - 40 ピン:VQFN (RHA)
  - 38 ピン:TSSOP (DBT)
  - 32 ピン:VQFN (RSM)

1.2 アプリケーション

- 煙感知器と熱感知器
- センサ・トランスミッタ
- サーキット・ブレーカ
- センサ・シグナル・コンディショニング
- 有線産業用通信
- 光学モジュール
- バッテリ・パック・マネージメント
- 料金タグ

1.3 概要

MSP430FR215xおよびMSP430FR235xマイクロコントローラ(MCU)は、MSP430™MCUバリュー・ライン・ポートフォリオに含まれる、センシングおよび測定アプリケーション向けの超低消費電力、低コスト・デバイスです。MSP430FR235xは、スマート・アナログ・コンボと呼ばれる4つの構成可能なシグナル・チェーン・モジュールを搭載しており、それぞれを12ビットDACまたは構成可能なプログラマブル・ゲイン・オペアンプとして使用することにより、個々のシステムの要求を満たしながら、部品点数とPCB占有面積を削減できます。また、12ビットのSAR ADCと2つのコンパレータも搭載しています。MSP430FR215x/MSP430FR235x MCUは、いずれも－40℃～105℃の拡張温度範囲に対応しているため、高温になる産業用機器ではFRAMデータ・ロギング機能を活用できます。拡張温度範囲への対応により、煙感知器、センサ・トランスミッタ、サーキット・ブレーカなどの開発で、それぞれの要件を満たすことができます。

MSP430FR215x/MSP430FR235x MCUには強力な16ビットRISC CPU、16ビット・レジスタ、および定数ジェネレータが搭載されており、最大限のコード効率を実現できます。また、デジタル制御発振器(DCO)により、低消費電力モードからアクティブ・モードへ通常、10µs未満でウェイクアップできます。

MSP430超低消費電力(ULP) FRAMマイクロコントローラ・プラットフォームは、独自の組み込みFRAMと包括的な超低消費電力のシステム・アーキテクチャを組み合わせたものであり、システム設計において性能の向上と消費電力の削減を両立できます。FRAMテクノロジは、RAMの低消費電力で高速な書き込み、柔軟性、耐久性と、フラッシュの不揮発性動作を併せ持つものです。

MSP430FR215x/MSP430FR235x MCUは、ハードウェアおよびソフトウェアの大規模なエコシステムによってサポートされており、リファレンス・デザインやサンプル・コードにより設計をすぐに開始できます。開発キットにはMSP-EXP430FR2355 LaunchPad™開発キットと、MSP-TS430PT48 48ピン・ターゲット開発ボードが含まれます。また、TI は無償の MSP430Ware™ ソフトウェアも提供しており、Code Composer Studio™ IDE デスクトップのコンポーネントとして利用できます。また、TI Resource Explorer ではクラウド・バージョンを利用できます。MSP430 MCU には、広範囲のオンライン資料、トレーニング、および E2E™ サポート・フォーラムによるオンライン・サポートも用意されています。

モジュールの詳細な説明については、『MSP430FR4xx and MSP430FR2xx Family User's Guide』(英語) を参照してください。

Copyright © 2018–2019, Texas Instruments Incorporated

製品情報(1)

型番	動作温度範囲	パッケージ	本体サイズ(2)
MSP430FR2355TPT	−40℃～105℃	LQFP (48)	7mm×7mm
MSP430FR2353TPT			
MSP430FR2155TPT			
MSP430FR2153TPT			
MSP430FR2355TRHA	−40℃～105℃	VQFN（40）	6mm×6mm
MSP430FR2353TRHA			
MSP430FR2155TRHA			
MSP430FR2153TRHA			
MSP430FR2355TDBT	−40℃～105℃	TSSOP (38)	9.7mm×4.4mm
MSP430FR2353TDBT			
MSP430FR2155TDBT			
MSP430FR2153TDBT			
MSP430FR2355TRSM	−40°C～105°C	VQFN (32)	4mm×4mm
MSP430FR2353TRSM			
MSP430FR2155TRSM			
MSP430FR2153TRSM			

(1) 最新の製品、パッケージ、および注文情報については、9の「*パッケージ情報*」、またはwww.ti.comのTI Web サイトを参照してください。
(2) ここに記載されているサイズは概略です。許容公差を含めたパッケージの寸法については、9の「*メカニカル・データ*」を参照してください。

注意

電気的な過剰ストレスや、データやコード・メモリの不安定化を防止するため、デバイス・レベルのESD仕様に従って、システム・レベルのESD保護を適用する必要があります。詳細については、『MSP430™ System-Level ESD Considerations』(英語) を参照してください。

1.4 機能ブロック図

図 1-1 にMSP430FR235xの機能ブロック図を示します。

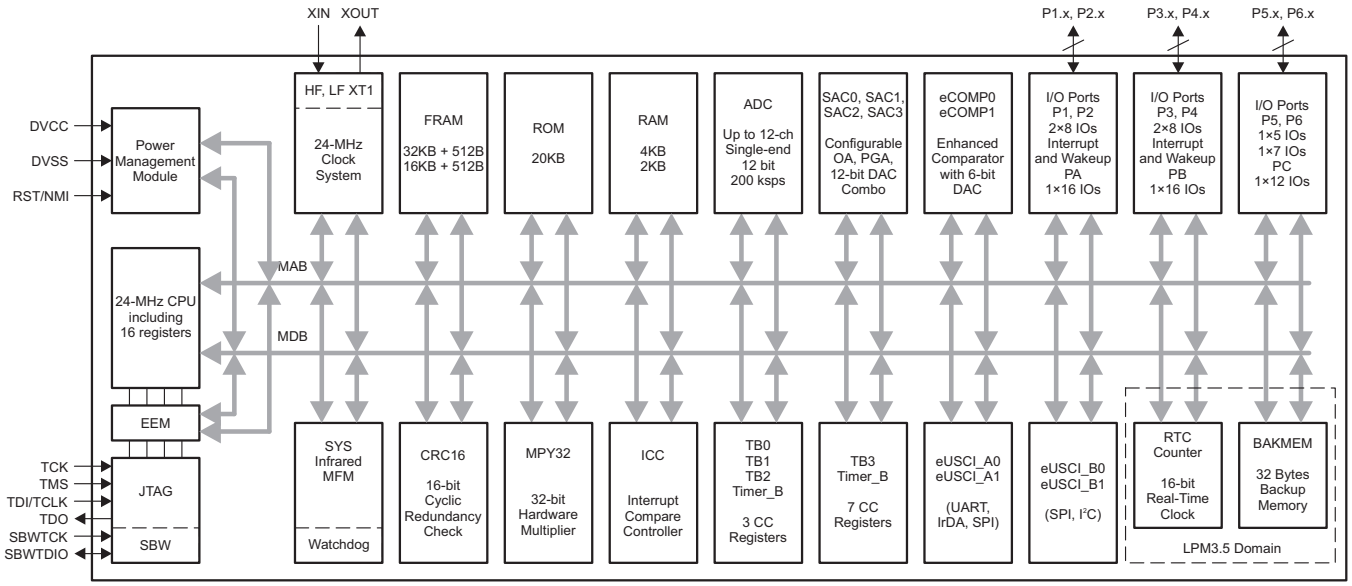

図 1-1. MSP430FR235x の機能ブロック図

図 1-2 に、MSP430FR215x の機能ブロック図を示します。

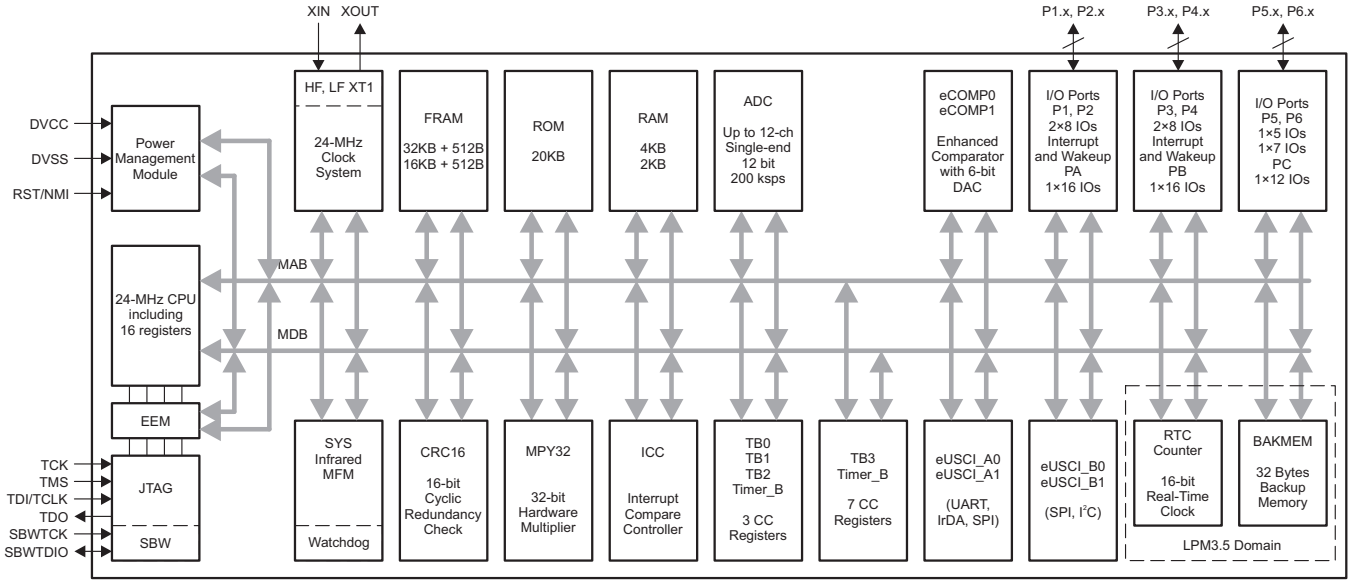

図 1-2. MSP430FR215xの機能ブロック図

- このMCUには、DVCCピンとDVSSピンからなる1つの主電源ペアがあり、デジタルとアナログの両方のモジュールに電力を供給します。バイパスおよびデカップリング・コンデンサとしては、それぞれ4.7µF～10µFおよび0.1µFで、精度±5%が推奨されます。
- P1、P2、P3、P4にはピン割り込み機能があり、LPM4、LPM3.5、LPM4.5を含むすべてのLPMからMCUをウェイクアップできます。
- 各Timer_B3には3つのキャプチャ/比較レジスタがあります。外部的に接続されているのはCCR1およびCCR2のみです。Timer_B7には7つのキャプチャ/比較レジスタがあります。外部的に接続されているのはCCR1～CCR6のみです。CCR0レジスタは、内部的な期間のタイミングと割り込みの生成にのみ使用できます。
- LPM3.5では、RTCカウンタとバックアップ・メモリが動作し、他のペリフェラルはオフです。

Copyright © 2018–2019, Texas Instruments Incorporated

Table of Contents

1 デバイスの概要 1
1.1 特長 1
1.2 アプリケーション 2
1.3 概要 2
1.4 機能ブロック図 4
2 改訂履歴 6
3 Device Comparison 8
3.1 Related Products 9
4 Terminal Configuration and Functions 10
4.1 Pin Diagrams 10
4.2 Pin Attributes 18
4.3 Signal Descriptions 22
4.4 Pin Multiplexing 26
4.5 Buffer Type 26
4.6 Connection of Unused Pins 26
5 Specifications 27
5.1 Absolute Maximum Ratings 27
5.2 ESD Ratings 27
5.3 Recommended Operating Conditions 27
5.4 Active Mode Supply Current Into V_{CC} Excluding External Current 28
5.5 Active Mode Supply Current Per MHz 28
5.6 Low-Power Mode LPM0 Supply Currents Into V_{CC} Excluding External Current 28
5.7 Low-Power Mode LPM3 and LPM4 Supply Currents (Into V_{CC}) Excluding External Current 29
5.8 Low-Power Mode LPMx.5 Supply Currents (Into V_{CC}) Excluding External Current 30
5.9 Production Distribution of LPM Supply Currents 31
5.10 Typical Characteristics - Current Consumption Per Module 32
5.11 Thermal Resistance Characteristics 32
5.12 Timing and Switching Characteristics 33
6 Detailed Description 62
6.1 CPU 62
6.2 Operating Modes 62
6.3 Interrupt Vector Addresses 64
6.4 Memory Organization 66
6.5 Bootloader (BSL) 66
6.6 JTAG Standard Interface 67
6.7 Spy-Bi-Wire Interface (SBW) 67
6.8 FRAM 67
6.9 Memory Protection 68
6.10 Peripherals 68
6.11 Input/Output Diagrams 96
6.12 Device Descriptors (TLV) 108
6.13 Identification 110
7 Applications, Implementation, and Layout 111
7.1 Device Connection and Layout Fundamentals 111
7.2 Peripheral- and Interface-Specific Design Information 114
7.3 ROM Libraries 115
7.4 Typical Applications 115
8 デバイスおよびドキュメントのサポート 116
8.1 はじめに 116
8.2 デバイスの項目表記 116
8.3 ツールとソフトウェア 117
8.4 ドキュメントのサポート 119
8.5 関連リンク 120
8.6 商標 121
8.7 静電気放電に関する注意事項 121
8.8 Glossary 121
9 メカニカル、パッケージ、および注文情報 122

2 改訂履歴

リビジョン C からリビジョン D への変更点

2019年3月6日発行分から2019年12月10日発行分への変更	Page
• 図 1-1、「*MSP430FR235x の機能ブロック図*」および 図 1-2、「*MSP430FR215x の機能ブロック図*」で ROM サイズを訂正	4
• Added a note on all VQFN pinouts to indicate that the thermal pad should be connected to VSS	11
• Corrected 図 4-4, *32-Pin RSM (VQFN) (Top View) – MSP430FR235x*	13
• Changed the note that begins "Supply voltage changes faster than 0.2 V/µs can trigger a BOR reset..." in Section 5.3, *Recommended Operating Conditions*	27
• Added the note that begins "TI recommends that power to the DVCC pin must not exceed the limits..." in Section 5.3, *Recommended Operating Conditions*	27
• Changed the note that begins "A capacitor tolerance of ±20% or better is required..." in Section 5.3, *Recommended Operating Conditions*	27
• Combined former sections 5.8 and 5.10 into 5.9, *Production Distribution of LPM Supply Currents*	31
• Corrected the "SVS disabled" condition for 図 5-1	31
• Added the note "See *MSP430 32-kHz Crystal Oscillators* for details on crystal section, layout, and testing" to 表 5-3, *XT1 Crystal Oscillator (Low Frequency)*	35
• Changed the note that begins "Requires external capacitors at both terminals..." in 表 5-3, *XT1 Crystal Oscillator (Low Frequency)*	35
• Added the $t_{TB,cap}$ parameter in 表 5-13, *Timer_B*	45
• Corrected the test conditions for the R_I parameter in 表 5-20, *ADC, Power Supply and Input Range Conditions*	51
• Removed ADCDIV from the equation for the ADC conversion time because ADCCLK is after division in 表 5-21, *ADC, Timing Parameters*	51
• Added the note that begins "$t_{Sample} = \ln(2^{n+1}) \times \tau$ ..." in 表 5-21, *ADC, Timing Parameters*	51
• Changed the unit from "nV" to "µV" for the "Input noise voltage" in the 表 5-25, *SAC, OA*	56
• Changed the unit from "nv/Hz" to "nV/$\sqrt{Hz}$" for the "Input noise voltage density" in the 表 5-25, *SAC, OA*	56
• Removed the I_{ref} trim parameter from 表 5-27, *FRAM*	58
• Changed the bitfield name from RTCCLK to RTCCKSEL in the table note on 表 6-9, *Clock Distribution*	69
• Added 6.10.17, *Cross-Chip Interconnection (SACx are MSP430FR235x Devices Only)*	84
• Added P1SELC information in 表 6-41, *Port P1, P2 Registers (Base Address: 0200h)*	87
• Added P2SELC information in 表 6-41, *Port P1, P2 Registers (Base Address: 0200h)*	87
• Added P3SELC information in 表 6-42, *Port P3, P4 Registers (Base Address: 0220h)*	88
• Added P4SELC information in 表 6-42, *Port P3, P4 Registers (Base Address: 0220h)*	88
• Added P5SELC information in 表 6-43, *Port P5, P6 Registers (Base Address: 0240h)*	88
• Added P6SELC information in 表 6-43, *Port P5, P6 Registers (Base Address: 0240h)*	88
• Changed CRC covered end address to 0x1AF7 in table note (1) in 表 6-70, *Device Descriptors*	108

リビジョン B からリビジョン C への変更点

2018年7月3日発行分から2019年03月5日発行分への変更	Page
• 1.1、「*特長*」に 32 ピン VQFN (RSM) パッケージの情報を追加	2
• 1.3、「*概要*」の「製品情報」表に、32 ピン VQFN (RSM) パッケージの情報を追加	3
• Added 32-pin VQFN (RSM) package information in 表 3-1, *Device Comparison*	8
• Added 図 4-4, *32-Pin RSM (VQFN) (Top View) – MSP430FR235x*	13
• Added 図 4-8, *32-Pin RSM (VQFN) (Top View) – MSP430FR215x*	17
• Added 32-pin VQFN (RSM) package information in 4.2, *Pin Attributes*	18
• Added 32-pin VQFN (RSM) package information in 4.3, *Signal Descriptions*	22
• Added 32-pin VQFN (RSM) package information in Section 5.11, *Thermal Resistance Characteristics*	32
• Added the $t_{TB,cap}$ parameter in 表 5-13, *Timer_B*	45
• Removed the I_{ref} trim parameter from 表 5-27, *FRAM*	58

Copyright © 2018–2019, Texas Instruments Incorporated

リビジョン A からリビジョン B への変更点

2018年6月20日発行分から2018年07月2日発行分への変更	Page
• Added the $t_{TB,cap}$ parameter in 表 5-13, *Timer_B*	45
• Removed the I_{ref} trim parameter from 表 5-27, *FRAM*	58
• 8.3、「*ツールとソフトウェア*」を更新	117
• 8.4、「*ドキュメントのサポート*」に正誤表を追加	119

初版からリビジョン A への変更点

2018年5月11日発行分から2018年06月19日発行分への変更	Page
• ドキュメント・ステータスを量産データに変更	1
• Added missing UCB0SCL signal to P1.3/UCB0SOMI/UCB0SCL/OA0+/A3 in pinout figures	11
• Added the $t_{TB,cap}$ parameter in 表 5-13, *Timer_B*	45
• Removed the I_{ref} trim parameter from 表 5-27, *FRAM*	58
• Added row for "Driver library and FFT library" in 表 6-4, *Memory Organization*	66
• Added 7.3, *ROM Libraries*	115
• Corrected the title and link to reference design in 表 7-1, *Tools and Reference Designs*	115

3 Device Comparison

表 3-1 summarizes the features of the available family members.

表 3-1. Device Comparison(1) (2)

DEVICE	PROGRAM FRAM	SRAM (bytes)	TB0, TB1, TB2	TB3	eUSCI_A	eUSCI_B	12-BIT ADC CHANNELS	SAC	eCOMP	I/Os	PACKAGE
MSP430FR2355PT	32KB + 512B	4096	3 × CCR(3)	7 × CCR(3)	2	2	12	4	2	44	48 PT (LQFP)
MSP430FR2353PT	16KB + 512B	2048	3 × CCR(3)	7 × CCR(3)	2	2	12	4	2	44	48 PT (LQFP)
MSP430FR2355RHA	32KB + 512B	4096	3 × CCR(3)	7 × CCR(3)	2	2	10	4	2	36	40 RHA (VQFN)
MSP430FR2353RHA	16KB + 512B	2048	3 × CCR(3)	7 × CCR(3)	2	2	10	4	2	36	40 RHA (VQFN)
MSP430FR2355DBT	32KB + 512B	4096	3 × CCR(3)	7 × CCR(3)	2	2	10	4	2	34	38 DBT (TSSOP)
MSP430FR2353DBT	16KB + 512B	2048	3 × CCR(3)	7 × CCR(3)	2	2	10	4	2	34	38 DBT (TSSOP)
MSP430FR2355RSM	32KB + 512B	4096	3 × CCR(3)	7 × CCR(3)	2	2(4)	8	4	2	28	32 RSM (VQFN)
MSP430FR2353RSM	16KB + 512B	2048	3 × CCR(3)	7 × CCR(3)	2	2(4)	8	4	2	28	32 RSM (VQFN)
MSP430FR2155PT	32KB + 512B	4096	3 × CCR(3)	7 × CCR(3)	2	2	12	–	2	44	48 PT (LQFP)
MSP430FR2153PT	16KB + 512B	2048	3 × CCR(3)	7 × CCR(3)	2	2	12	–	2	44	48 PT (LQFP)
MSP430FR2155RHA	32KB + 512B	4096	3 × CCR(3)	7 × CCR(3)	2	2	10	–	2	36	40 RHA (VQFN)
MSP430FR2153RHA	16KB + 512B	2048	3 × CCR(3)	7 × CCR(3)	2	2	10	–	2	36	40 RHA (VQFN)
MSP430FR2155DBT	32KB + 512B	4096	3 × CCR(3)	7 × CCR(3)	2	2	10	–	2	34	38 DBT (TSSOP)
MSP430FR2153DBT	16KB + 512B	2048	3 × CCR(3)	7 × CCR(3)	2	2	10	–	2	34	38 DBT (TSSOP)
MSP430FR2155RSM	32KB + 512B	4096	3 × CCR(3)	7 × CCR(3)	2	2(4)	8	–	2	28	32 RSM (VQFN)
MSP430FR2153RSM	16KB + 512B	2048	3 × CCR(3)	7 × CCR(3)	2	2(4)	8	–	2	28	32 RSM (VQFN)

(1) For the most current device, package, and ordering information, see the *Package Option Addendum* in 9, or see the TI web site at www.ti.com.
(2) Package drawings, standard packing quantities, thermal data, symbolization, and PCB design guidelines are available at www.ti.com/packaging.
(3) A CCR register is a configurable register that provides internal and external capture or compare inputs, or internal and external PWM outputs. Not all CCR channels are package specific. See the definition in 4.3.
(4) eUSCI_B1 supports only I^2C function.

Copyright © 2018–2019, Texas Instruments Incorporated

3.1 Related Products

For information about other devices in this family of products or related products, see the following links.

TI 16-bit and 32-bit microcontrollers

High-performance, low-power solutions to enable the autonomous future

Products for MSP430 ultra-low-power sensing & measurement microcontrollers

One platform. One ecosystem. Endless possibilities.

Companion products for MSP430FR2355

Review products that are frequently purchased or used with this product.

Reference designs for MSP430FR2355

Find reference designs leveraging the best in TI technology to solve your system-level challenges.

4 Terminal Configuration and Functions

4.1 Pin Diagrams

図 4-1 shows the pinout of the 48-pin PT package for the MSP430FR235x MCUs.

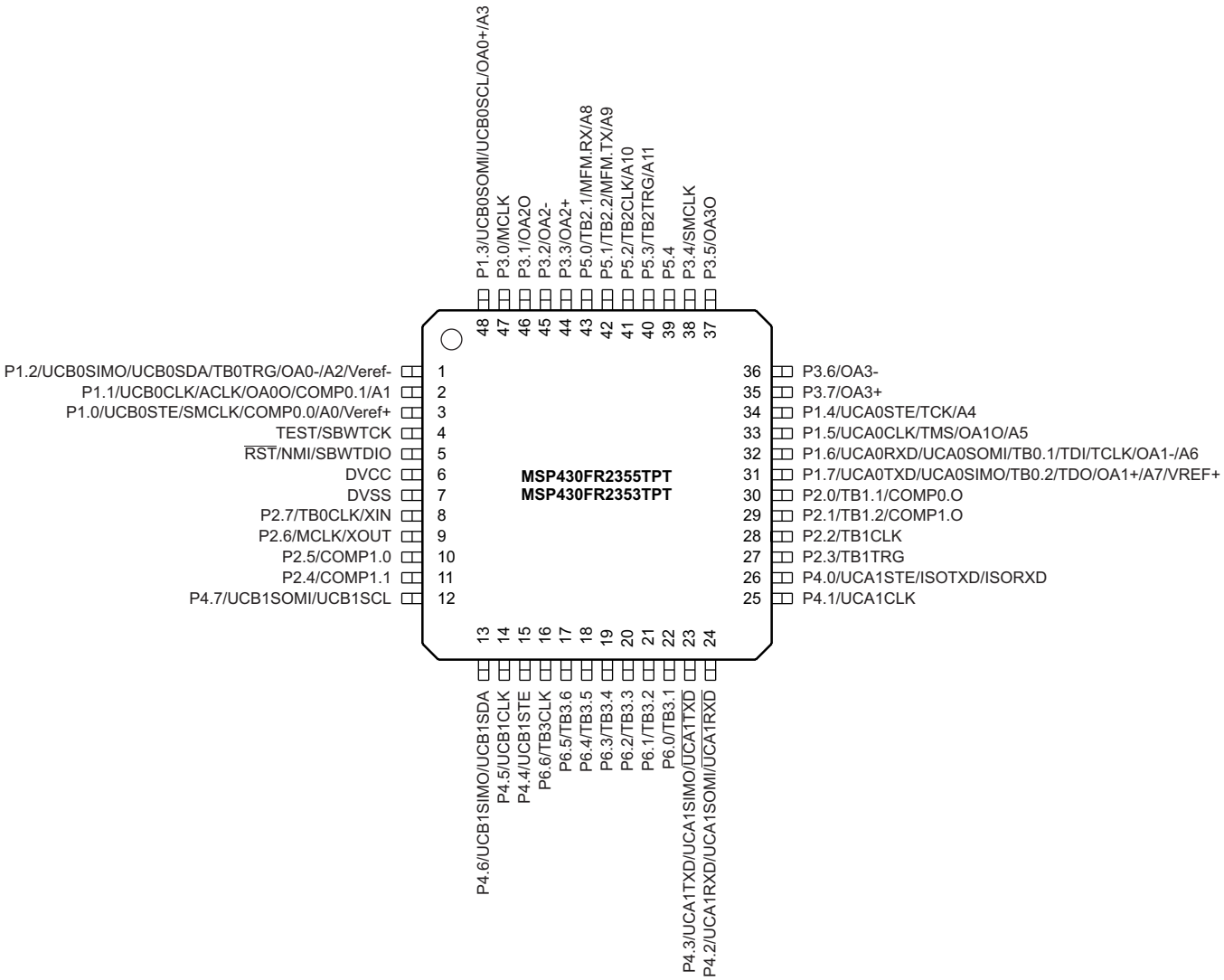

図 4-1. 48-Pin PT (LQFP) (Top View) – MSP430FR235x

Copyright © 2018–2019, Texas Instruments Incorporated

図 4-2 shows the pinout of the 40-pin RHA package for the MSP430FR235x MCUs.

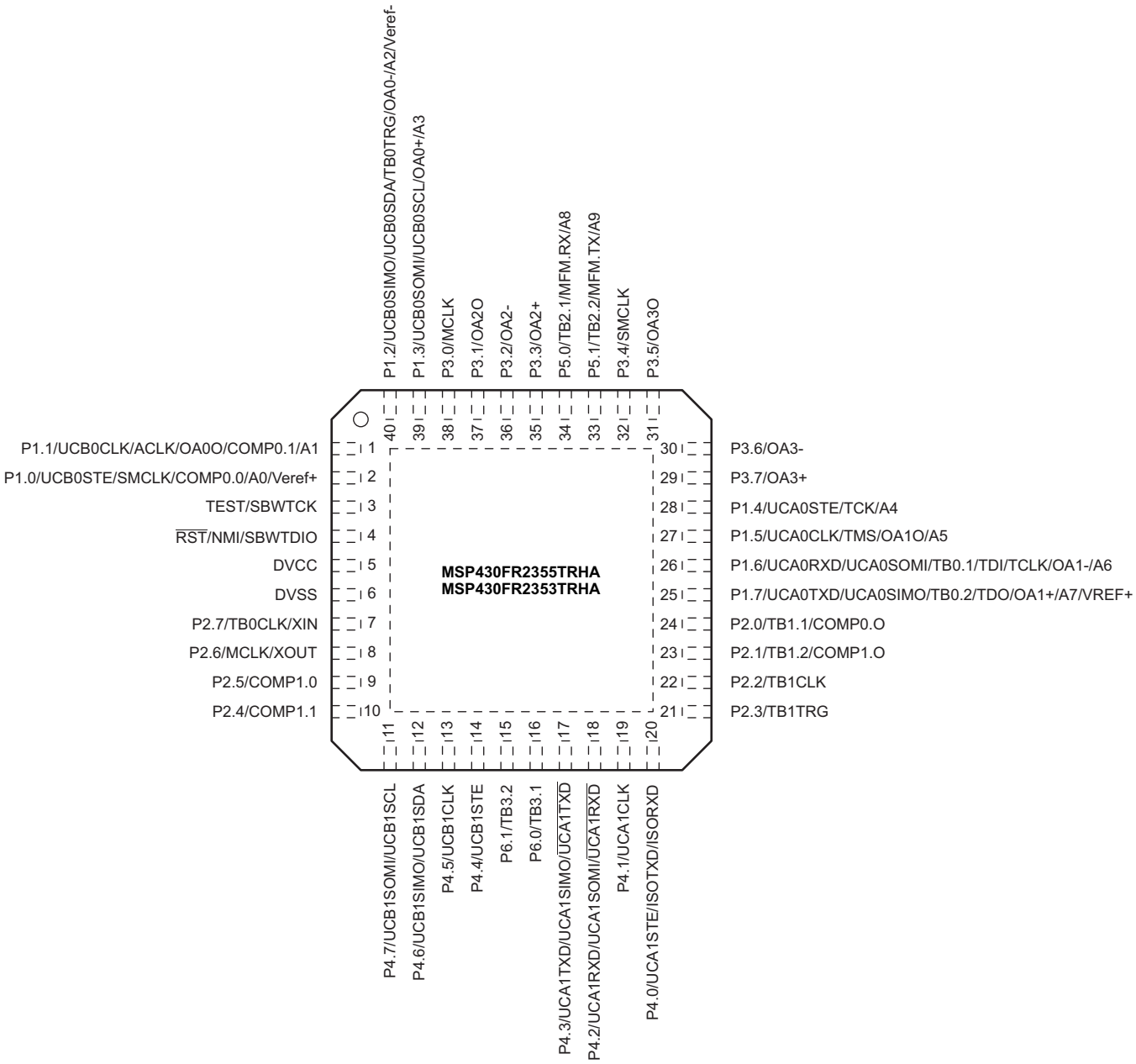

NOTE: Connect the exposed thermal pad to VSS.

図 4-2. 40-Pin RHA (VQFN) (Top View) – MSP430FR235x

図 4-3 shows the pinout of the 38-pin DBT package for the MSP430FR235x MCUs.

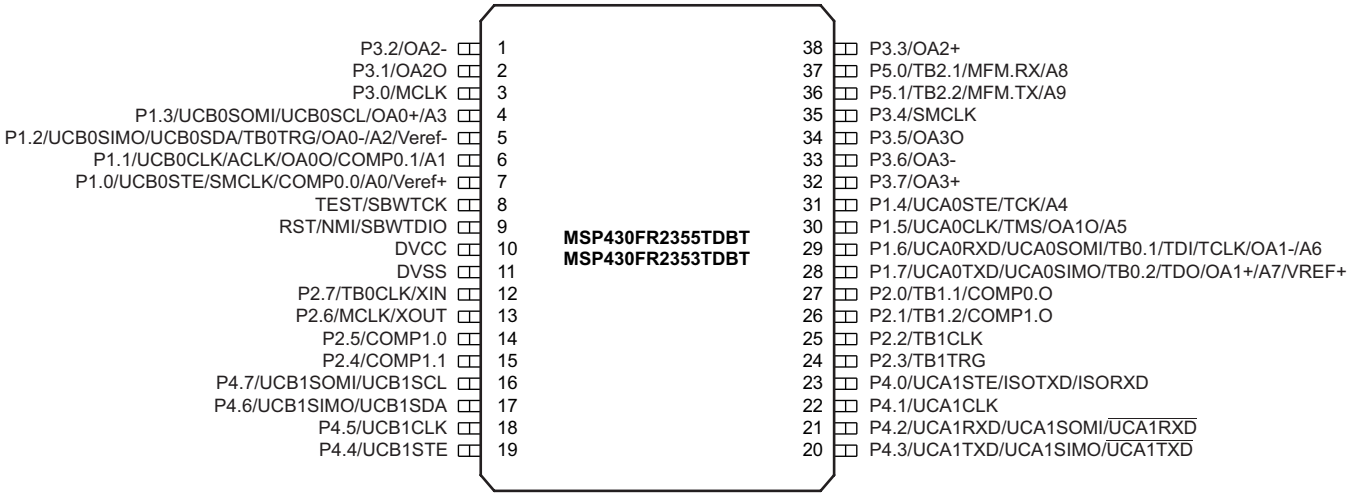

図 4-3. 38-Pin DBT (TSSOP) (Top View) – MSP430FR235x

Copyright © 2018–2019, Texas Instruments Incorporated

図 4-4 shows the pinout of the 32-pin RSM package for the MSP430FR235x MCUs.

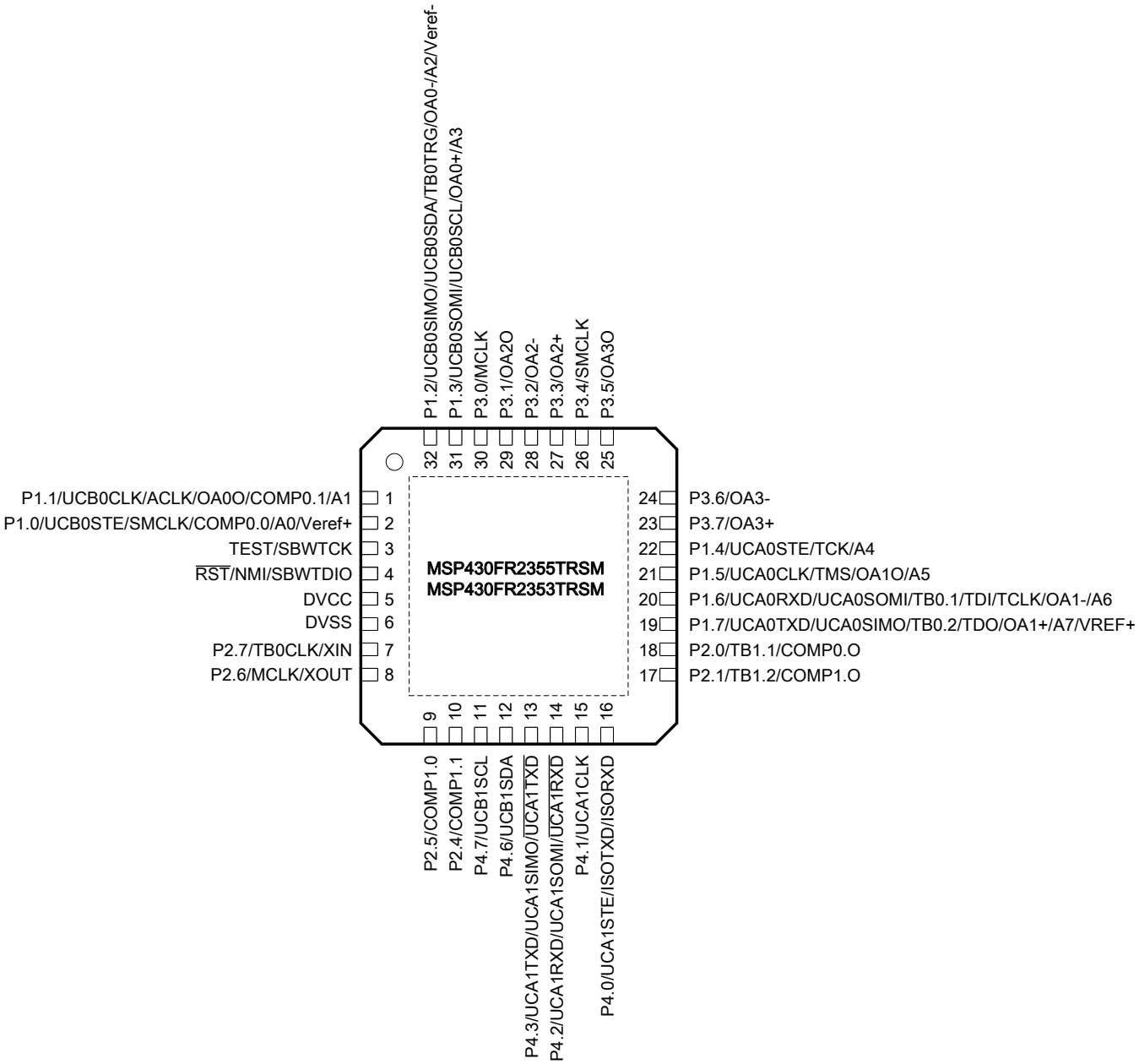

NOTE: Connect the exposed thermal pad to VSS.

図 4-4. 32-Pin RSM (VQFN) (Top View) – MSP430FR235x

図 4-5 shows the pinout of the 48-pin PT package for the MSP430FR215x MCUs.

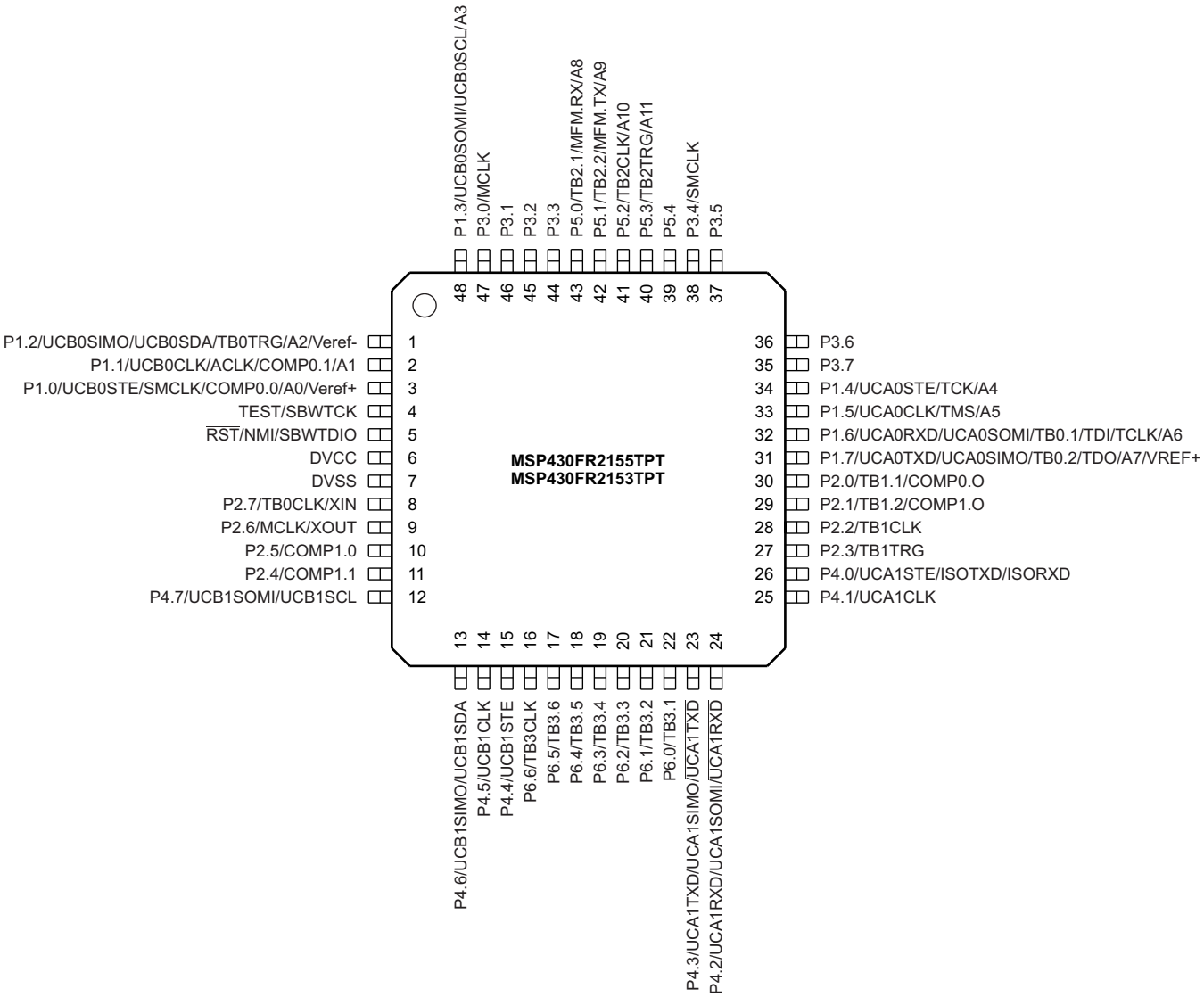

図 4-5. 48-Pin PT (LQFP) (Top View) – MSP430FR215x

Copyright © 2018–2019, Texas Instruments Incorporated

図 4-6 shows the pinout of the 40-pin RHA package for the MSP430FR215x MCUs.

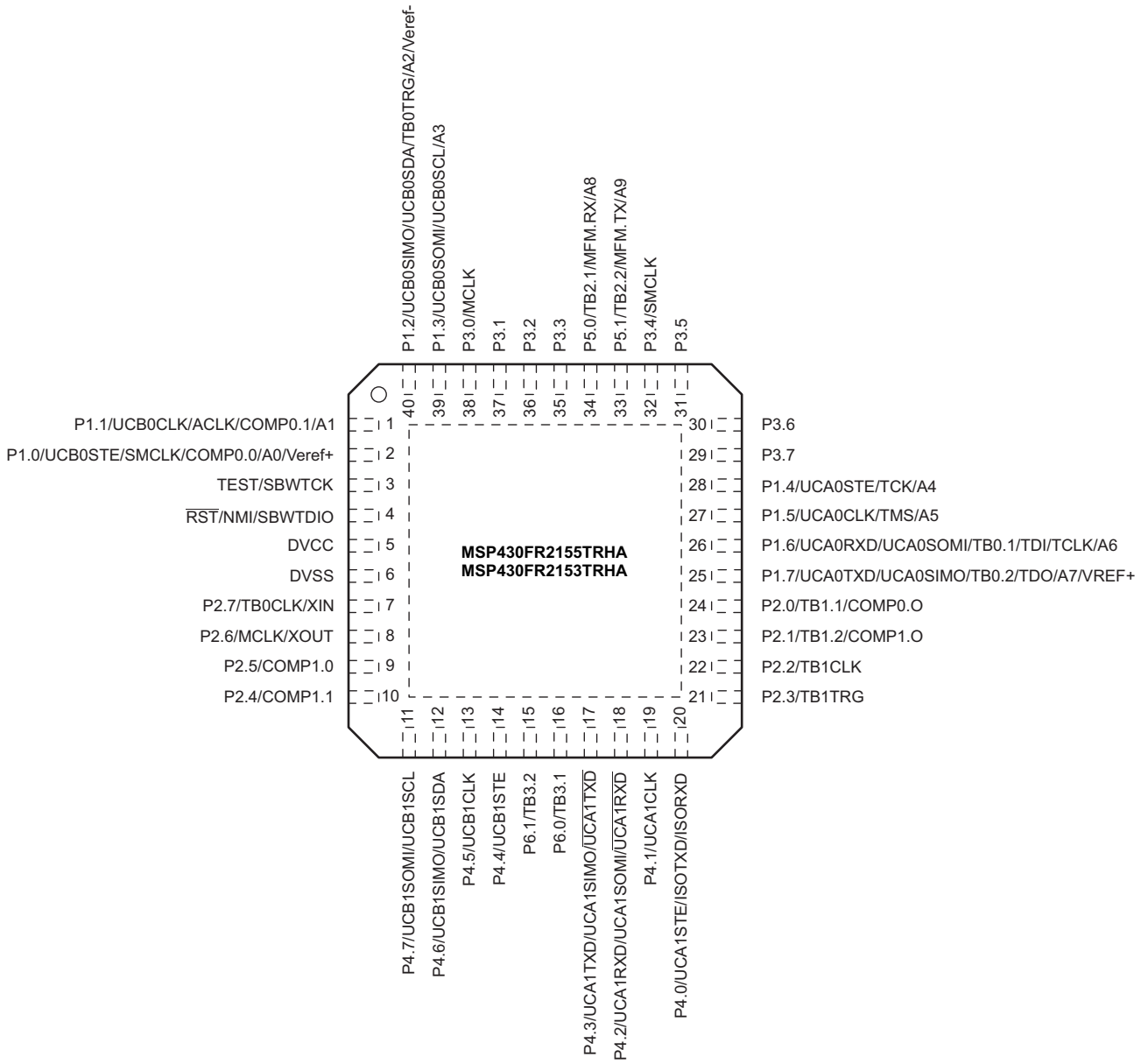

NOTE: Connect the exposed thermal pad to VSS.

図 4-6. 40-Pin RHA (VQFN) (Top View) – MSP430FR215x

図 4-7 shows the pinout of the 38-pin DBT package for the MSP430FR215x MCUs.

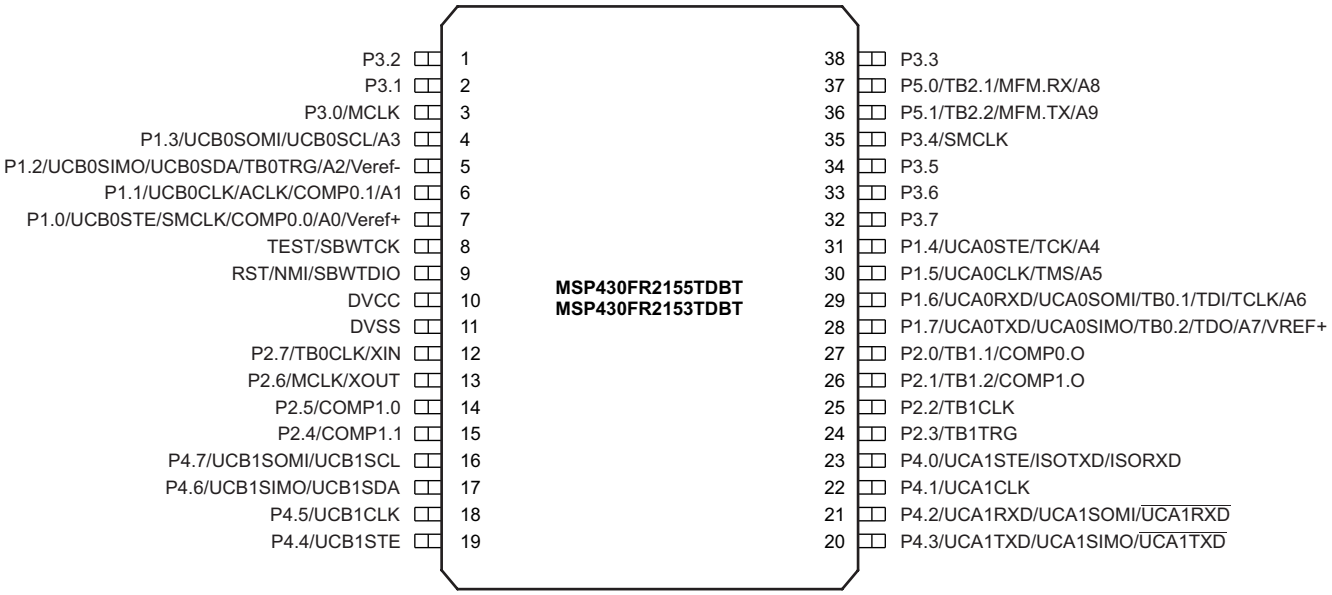

図 4-7. 38-Pin DBT (TSSOP) (Top View) – MSP430FR215x

Copyright © 2018–2019, Texas Instruments Incorporated

図 4-8 shows the pinout of the 32-pin RSM package for the MSP430FR215x MCUs.

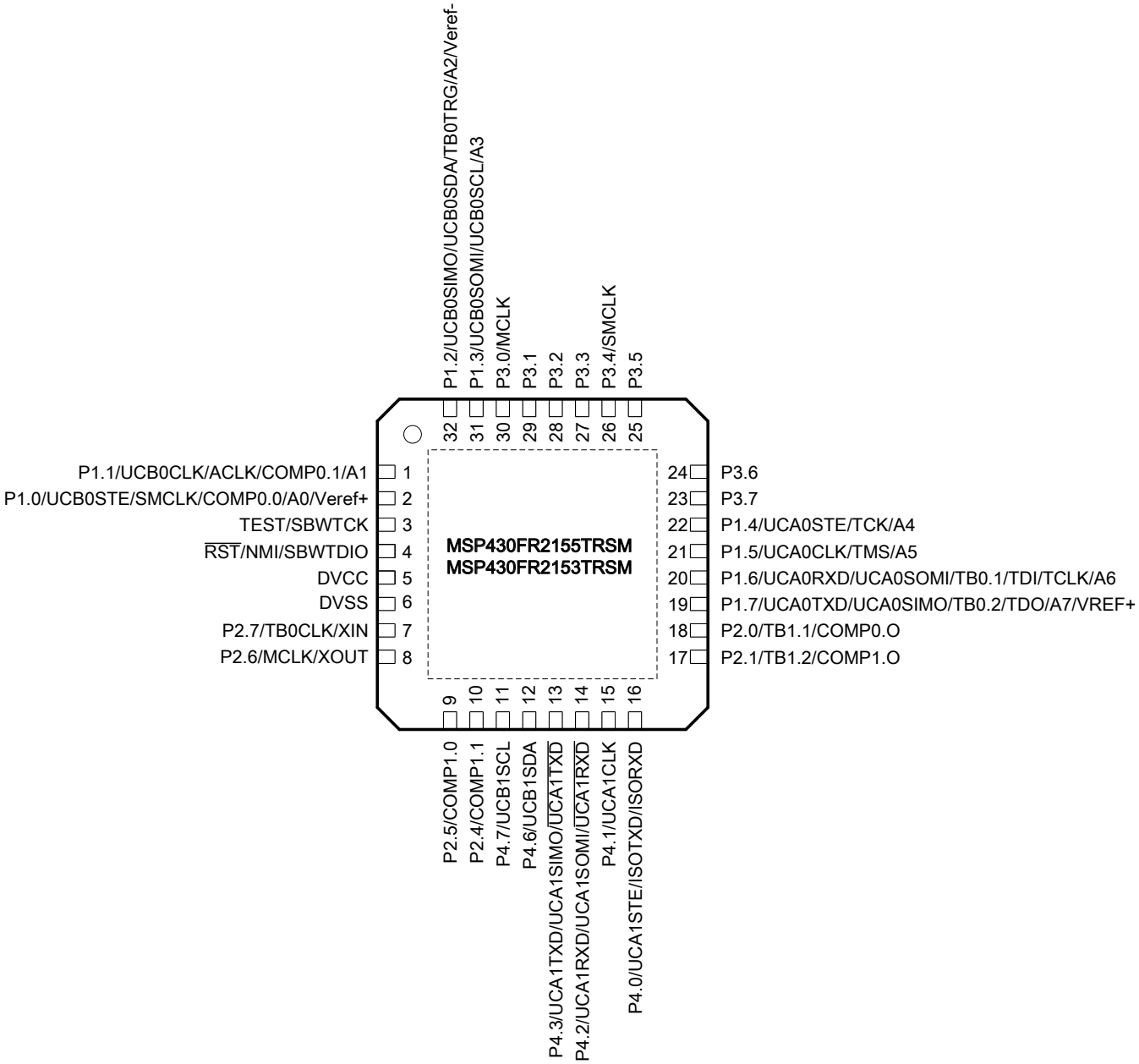

NOTE: Connect the exposed thermal pad to VSS.

図 4-8. 32-Pin RSM (VQFN) (Top View) – MSP430FR215x

4.2 Pin Attributes

表 4-1 lists the attributes of all pins.

表 4-1. Pin Attributes

PIN NUMBER				SIGNAL NAME[1] [2]	SIGNAL TYPE[3]	BUFFER TYPE[4]	POWER SOURCE	RESET STATE AFTER BOR[5]
PT	RHA	DBT	RSM					
1	40	5	32	P1.2 (RD)	I/O	LVCMOS	DVCC	OFF
				UCB0SIMO	I/O	LVCMOS	DVCC	–
				UCB0SDA	I/O	LVCMOS	DVCC	–
				TB0TRG	I	LVCMOS	DVCC	–
				OA0-[6]	I	Analog	DVCC	–
				A2	I	Analog	DVCC	–
				Veref-	I	Analog	DVCC	–
2	1	6	1	P1.1 (RD)	I/O	LVCMOS	DVCC	OFF
				UCB0CLK	I/O	LVCMOS	DVCC	–
				ACLK	O	LVCMOS	DVCC	–
				OA0O[6]	O	Analog	DVCC	–
				COMP0_1	I	Analog	DVCC	–
				A1	I	Analog	DVCC	–
3	2	7	2	P1.0 (RD)	I/O	LVCMOS	DVCC	OFF
				UCB0STE	I/O	LVCMOS	DVCC	–
				SMCLK	O	LVCMOS	DVCC	–
				COMP0_0	I	Analog	DVCC	–
				A0	I	Analog	DVCC	–
				Veref+	I	Analog	DVCC	–
4	3	8	3	TEST (RD)	I	LVCMOS	DVCC	OFF
				SBWTCK	I	LVCMOS	DVCC	–
5	4	9	4	$\overline{\text{RST}}$ (RD)	I/O	LVCMOS	DVCC	OFF
				NMI	I	LVCMOS	DVCC	–
				SBWTDIO	I/O	LVCMOS	DVCC	–
6	5	10	5	DVCC	P	Power	DVCC	N/A
7	6	11	6	DVSS	P	Power	DVCC	N/A
8	7	12	7	P2.7 (RD)	I/O	LVCMOS	DVCC	OFF
				TB0CLK	I	LVCMOS	DVCC	–
				XIN	I	LVCMOS	DVCC	–
9	8	13	8	P2.6 (RD)	I/O	LVCMOS	DVCC	OFF
				MCLK	O	LVCMOS	DVCC	–
				XOUT	O	LVCMOS	DVCC	–
10	9	14	9	P2.5 (RD)	I/O	LVCMOS	DVCC	OFF
				COMP1.0	I	Analog	DVCC	–
11	10	15	10	P2.4 (RD)	I/O	LVCMOS	DVCC	OFF
				COMP1.1	I	Analog	DVCC	–

(1) Signals names with (RD) denote the reset default pin name.
(2) To determine the pin mux encodings for each pin, see 6.11.
(3) Signal types: I = input, O = output, I/O = input or output
(4) Buffer types: LVCMOS, analog, or power
(5) Reset states:
OFF = High-impedance input with pullup or pulldown disabled (if available)
N/A = Not applicable
(6) MSP430FR235x devices only

Copyright © 2018–2019, Texas Instruments Incorporated

表 4-1. Pin Attributes (continued)

PIN NUMBER				SIGNAL NAME[1] [2]	SIGNAL TYPE[3]	BUFFER TYPE[4]	POWER SOURCE	RESET STATE AFTER BOR[5]
PT	RHA	DBT	RSM					
12	11	16	11	P4.7 (RD)	I/O	LVCMOS	DVCC	OFF
				UCB1SOMI[7]	I/O	LVCMOS	DVCC	–
				UCB1SCL	I/O	LVCMOS	DVCC	–
13	12	17	12	P4.6 (RD)	I/O	LVCMOS	DVCC	OFF
				UCB1SIMO[7]	I/O	LVCMOS	DVCC	–
				UCB1SDA	I/O	LVCMOS	DVCC	–
14	13	18	–	P4.5 (RD)	I/O	LVCMOS	DVCC	OFF
				UCB1CLK	I/O	LVCMOS	DVCC	–
15	14	19	–	P4.4 (RD)	I/O	LVCMOS	DVCC	OFF
				UCB1STE	I/O	LVCMOS	DVCC	–
16	–	–	–	P6.6 (RD)	I/O	LVCMOS	DVCC	OFF
				TB3CLK	I	LVCMOS	DVCC	–
17	–	–	–	P6.5 (RD)	I/O	LVCMOS	DVCC	OFF
				TB3.6	I/O	LVCMOS	DVCC	–
18	–	–	–	P6.4 (RD)	I/O	LVCMOS	DVCC	OFF
				TB3.5	I/O	LVCMOS	DVCC	–
19	–	–	–	P6.3 (RD)	I/O	LVCMOS	DVCC	OFF
				TB3.4	I/O	LVCMOS	DVCC	–
20	–	–	–	P6.2 (RD)	I/O	LVCMOS	DVCC	OFF
				TB3.3	I/O	LVCMOS	DVCC	–
21	15	–	–	P6.1 (RD)	I/O	LVCMOS	DVCC	OFF
				TB3.2	I/O	LVCMOS	DVCC	–
22	16	–	–	P6.0 (RD)	I/O	LVCMOS	DVCC	OFF
				TB3.1	I/O	LVCMOS	DVCC	–
23	17	20	13	P4.3 (RD)	I/O	LVCMOS	DVCC	OFF
				UCA1TXD	O	LVCMOS	DVCC	–
				UCA1SIMO	I/O	LVCMOS	DVCC	–
				$\overline{\text{UCA1TXD}}$	O	LVCMOS	DVCC	–
24	18	21	14	P4.2 (RD)	I/O	LVCMOS	DVCC	OFF
				UCA1RXD	I	LVCMOS	DVCC	–
				UCA1SOMI	I/O	LVCMOS	DVCC	–
				$\overline{\text{UCA1RXD}}$	I	LVCMOS	DVCC	–
25	19	22	15	P4.1 (RD)	I/O	LVCMOS	DVCC	OFF
				UCA1CLK	I/O	LVCMOS	DVCC	–
26	20	23	16	P4.0 (RD)	I/O	LVCMOS	DVCC	OFF
				UCA1STE	I/O	LVCMOS	DVCC	–
				ISOTXD	O	LVCMOS	DVCC	–
				ISORXD	I	LVCMOS	DVCC	–
27	21	24	–	P2.3 (RD)	I/O	LVCMOS	DVCC	OFF
				TB1TRG	I	LVCMOS	DVCC	–
28	22	25	–	P2.2 (RD)	I/O	LVCMOS	DVCC	OFF
				TB1CLK	I	LVCMOS	DVCC	–
29	23	26	17	P2.1(RD)	I/O	LVCMOS	DVCC	OFF
				TB1.2	I/O	LVCMOS	DVCC	–
				COMP1.O	O	LVCMOS	DVCC	–

(7) Not applicable in RSM package.

表 4-1. Pin Attributes (continued)

PIN NUMBER				SIGNAL NAME[1] [2]	SIGNAL TYPE[3]	BUFFER TYPE[4]	POWER SOURCE	RESET STATE AFTER BOR[5]
PT	RHA	DBT	RSM					
30	24	27	18	P2.0 (RD)	I/O	LVCMOS	DVCC	OFF
				TB1.1	I/O	LVCMOS	DVCC	–
				COMP0.O	O	LVCMOS	DVCC	–
31	25	28	19	P1.7 (RD)	I/O	LVCMOS	DVCC	OFF
				UCA0TXD	O	LVCMOS	DVCC	–
				UCA0SIMO	I/O	LVCMOS	DVCC	–
				TB0.2	I/O	LVCMOS	DVCC	–
				TDO	O	LVCMOS	DVCC	–
				OA1+[6]	I	Analog	DVCC	–
				A7	I	Analog	DVCC	–
				VREF+	O	Analog	DVCC	–
32	26	29	20	P1.6 (RD)	I/O	LVCMOS	DVCC	OFF
				UCA0RXD	I	LVCMOS	DVCC	–
				UCA0SOMI	I/O	LVCMOS	DVCC	–
				TB0.1	I/O	LVCMOS	DVCC	–
				TDI	I	LVCMOS	DVCC	–
				TCLK	I	LVCMOS	DVCC	–
				OA1-[6]	I	Analog	DVCC	–
				A6	I	Analog	DVCC	–
33	27	30	21	P1.5 (RD)	I/O	LVCMOS	DVCC	OFF
				UCA0CLK	I/O	LVCMOS	DVCC	–
				TMS	I	LVCMOS	DVCC	–
				OA1O[6]	O	Analog	DVCC	-
				A5	I	Analog	DVCC	–
34	28	31	22	P1.4 (RD)	I/O	LVCMOS	DVCC	OFF
				UCA0STE	I/O	LVCMOS	DVCC	–
				TCK	I	LVCMOS	DVCC	–
				A4	I	Analog	DVCC	–
35	29	32	23	P3.7 (RD)	I/O	LVCMOS	DVCC	OFF
				OA3+[6]	I	Analog	DVCC	–
36	30	33	24	P3.6 (RD)	I/O	LVCMOS	DVCC	OFF
				OA3-[6]	I	Analog	DVCC	–
37	31	34	25	P3.5 (RD)	I/O	LVCMOS	DVCC	OFF
				OA3O[6]	O	Analog	DVCC	–
38	32	35	26	P3.4 (RD)	I/O	LVCMOS	DVCC	OFF
				SMCLK	O	LVCMOS	DVCC	–
39	–	–	–	P5.4 (RD)	I/O	LVCMOS	DVCC	OFF
40	–	–	–	P5.3 (RD)	I/O	LVCMOS	DVCC	OFF
				TB2TRG	I	LVCMOS	DVCC	–
				A11	I	Analog	DVCC	–
41	–	–	–	P5.2 (RD)	I/O	LVCMOS	DVCC	OFF
				TB2CLK	I	LVCMOS	DVCC	–
				A10	I	Analog	DVCC	–

Copyright © 2018–2019, Texas Instruments Incorporated

表 4-1. Pin Attributes (continued)

PIN NUMBER				SIGNAL NAME[1] [2]	SIGNAL TYPE[3]	BUFFER TYPE[4]	POWER SOURCE	RESET STATE AFTER BOR[5]
PT	RHA	DBT	RSM					
42	33	36	–	P5.1 (RD)	I/O	LVCMOS	DVCC	OFF
				TB2.2	I/O	LVCMOS	DVCC	–
				MFM.TX	O	LVCMOS	DVCC	–
				A9	I	Analog	DVCC	–
43	34	37	–	P5.0 (RD)	I/O	LVCMOS	DVCC	OFF
				TB2.1	I/O	LVCMOS	DVCC	–
				MFM.RX	I	LVCMOS	DVCC	–
				A8	I	Analog	DVCC	–
44	35	38	27	P3.3 (RD)	I/O	LVCMOS	DVCC	OFF
				OA2+[6]	I	Analog	DVCC	–
45	36	1	28	P3.2 (RD)	I/O	LVCMOS	DVCC	OFF
				OA2-[6]	I	Analog	DVCC	–
46	37	2	29	P3.1 (RD)	I/O	LVCMOS	DVCC	OFF
				OA2O[6]	O	Analog	DVCC	–
47	38	3	30	P3.0 (RD)	I/O	LVCMOS	DVCC	OFF
				MCLK	O	LVCMOS	DVCC	–
48	39	4	31	P1.3 (RD)	I/O	LVCMOS	DVCC	OFF
				UCB0SOMI	I/O	LVCMOS	DVCC	–
				UCB0SCL	I/O	LVCMOS	DVCC	–
				OA0+[6]	I	Analog	DVCC	–
				A3	I	Analog	DVCC	–

4.3 Signal Descriptions

表 4-2 describes the signals for all device variants and package options.

表 4-2. Signal Descriptions

FUNCTION	SIGNAL NAME	PIN NUMBER(1)				PIN TYPE(2)	DESCRIPTION
		PT	RHA	DBT	RSM		
ADC	A0	3	2	7	2	I	Analog input A0
	A1	2	1	6	1	I	Analog input A1
	A2	1	40	5	32	I	Analog input A2
	A3	48	39	4	31	I	Analog input A3
	A4	34	28	31	22	I	Analog input A4
	A5	33	27	30	21	I	Analog input A5
	A6	32	26	29	20	I	Analog input A6
	A7	31	25	28	19	I	Analog input A7
	A8	43	34	37	–	I	Analog input A8
	A9	42	33	36	–	I	Analog input A9
	A10	41	–	–	–	I	Analog input A10
	A11	40	–	–	–	I	Analog input A11
	Veref+	3	2	7	2	I	ADC positive reference
	Veref-	1	40	5	32	I	ADC negative reference
eCOMP0	C0	3	2	7	2	I	Comparator input channel C0
	C1	2	1	6	1	I	Comparator input channel C1
	COUT	30	24	27	18	O	Comparator output channel COUT
eCOMP1	C0	10	9	14	9	I	Comparator input channel C0
	C1	11	10	15	10	I	Comparator input channel C1
	COUT	29	23	26	17	O	Comparator output channel COUT
SAC0(3)	OA0+	48	39	4	31	I	SAC0, OA positive input
	OA0-	1	40	5	32	I	SAC0, OA negative input
	OA0O	2	1	6	1	O	SAC0, OA output
SAC1(3)	OA1+	31	25	28	19	I	SAC1, OA positive input
	OA1-	32	26	29	20	I	SAC1, OA negative input
	OA1O	33	27	30	21	O	SAC1, OA output
SAC2(3)	OA2+	44	35	38	27	I	SAC2, OA positive input
	OA2-	45	36	1	28	I	SAC2, OA negative input
	OA2O	46	37	2	29	O	SAC2, OA output
SAC3(3)	OA3+	35	29	32	23	I	SAC3, OA positive input
	OA3-	36	30	33	24	I	SAC3, OA negative input
	OAO	37	31	34	25	O	SAC3, OA output
Clock	ACLK	2	1	6	1	O	ACLK output
	MCLK	9	8	13	8	O	MCLK output
		47	38	3	30	O	
	SMCLK	3	2	7	2	O	SMCLK output
		38	32	35	26	O	
	XIN	8	7	12	7	I	Input terminal for crystal oscillator
	XOUT	9	8	13	8	O	Output terminal for crystal oscillator

(1) Any pin that is not bonded out in a smaller package must be initialized by software after reset to achieve the lowest leakage current.
(2) I = input, O = output, I/O = input/output, P = power
(3) MSP430FR235x devices only

Copyright © 2018–2019, Texas Instruments Incorporated

表 4-2. Signal Descriptions (continued)

FUNCTION	SIGNAL NAME	PIN NUMBER(1)				PIN TYPE(2)	DESCRIPTION
		PT	RHA	DBT	RSM		
Debug	SBWTCK	4	3	8	3	I	Spy-Bi-Wire input clock
	SBWTDIO	5	4	9	4	I/O	Spy-Bi-Wire data input/output
	TCK	34	28	31	22	I	Test clock
	TCLK	32	26	29	20	I	Test clock input
	TDI	32	26	29	20	I	Test data input
	TDO	31	25	28	19	O	Test data output
	TMS	33	27	30	21	I	Test mode select
	TEST	4	3	8	3	I	Test mode pin – selected digital I/O on JTAG pins
System	NMI	5	4	9	4	I	Nonmaskable interrupt input
	$\overline{\text{RST}}$	5	4	9	4	I/O	Reset input, active-low
Power	DVCC	6	5	10	5	P	Power supply
	DVSS	7	6	11	6	P	Power ground
	VREF+	31	25	28	19	P	Output of positive reference voltage with ground as reference
GPIO, Port 1	P1.0	3	2	7	2	I/O	General-purpose I/O
	P1.1	2	1	6	1	I/O	General-purpose I/O
	P1.2	1	40	5	32	I/O	General-purpose I/O
	P1.3	48	39	4	31	I/O	General-purpose I/O
	P1.4	34	28	31	22	I/O	General-purpose I/O (4)
	P1.5	33	27	30	21	I/O	General-purpose I/O (4)
	P1.6	32	26	29	20	I/O	General-purpose I/O(4)
	P1.7	31	25	28	19	I/O	General-purpose I/O(4)
GPIO, Port 2	P2.0	30	24	27	18	I/O	General-purpose I/O
	P2.1	29	23	26	17	I/O	General-purpose I/O
	P2.2	28	22	25	–	I/O	General-purpose I/O
	P2.3	27	21	24	–	I/O	General-purpose I/O
	P2.4	11	10	15	10	I/O	General-purpose I/O
	P2.5	10	9	14	9	I/O	General-purpose I/O
	P2.6	9	8	13	8	I/O	General-purpose I/O
	P2.7	8	7	12	7	I/O	General-purpose I/O
GPIO, Port 3	P3.0	47	38	3	30	I/O	General-purpose I/O
	P3.1	46	37	2	29	I/O	General-purpose I/O
	P3.2	45	36	1	28	I/O	General-purpose I/O
	P3.3	44	35	38	27	I/O	General-purpose I/O
	P3.4	38	32	35	26	I/O	General-purpose I/O
	P3.5	37	31	34	25	I/O	General-purpose I/O
	P3.6	36	30	33	24	I/O	General-purpose I/O
	P3.7	35	29	32	23	I/O	General-purpose I/O

(4) Because this pin is multiplexed with the JTAG function, TI recommends disabling the pin interrupt function while in JTAG debug to prevent collisions.
Functions shared with these four pins cannot be debugged if 4-wire JTAG is used for debug.

表 4-2. Signal Descriptions (continued)

FUNCTION	SIGNAL NAME	PIN NUMBER(1)				PIN TYPE(2)	DESCRIPTION
		PT	RHA	DBT	RSM		
GPIO, Port 4	P4.0	26	20	23	16	I/O	General-purpose I/O
	P4.1	25	19	22	15	I/O	General-purpose I/O
	P4.2	24	18	21	14	I/O	General-purpose I/O
	P4.3	23	17	20	13	I/O	General-purpose I/O
	P4.4	15	14	19	–	I/O	General-purpose I/O
	P4.5	14	13	18	–	I/O	General-purpose I/O
	P4.6	13	12	17	12	I/O	General-purpose I/O
	P4.7	12	11	16	11	I/O	General-purpose I/O
GPIO, Port 5	P5.0	43	34	37	–	I/O	General-purpose I/O
	P5.1	42	33	36	–	I/O	General-purpose I/O
	P5.2	41	–	–	–	I/O	General-purpose I/O
	P5.3	40	–	–	–	I/O	General-purpose I/O
	P5.4	39	–	–	–	I/O	General-purpose I/O
GPIO, Port 6	P6.0	22	16	–	–	I/O	General-purpose I/O
	P6.1	21	15	–	–	I/O	General-purpose I/O
	P6.2	20	–	–	–	I/O	General-purpose I/O
	P6.3	19	–	–	–	I/O	General-purpose I/O
	P6.4	18	–	–	–	I/O	General-purpose I/O
	P6.5	17	–	–	–	I/O	General-purpose I/O
	P6.6	16	–	–	–	I/O	General-purpose I/O
UART	UCA0TXD	31	25	28	19	O	eUSCI_A0 UART transmit data
	UCA0RXD	32	26	29	20	I	eUSCI_A0 UART receive data
	UCA1TXD	23	17	20	13	O	eUSCI_A1 UART transmit data
	UCA1RXD	24	18	21	14	I	eUSCI_A1 UART receive data
ISO	ISOTXD	26	20	23	16	O	ISO transmit data (the logical AND product of UCA1TXD and TB3.2B)
	ISORXD	26	20	23	16	I	ISO receive data (to UCA1RXD and TB3.CCI2B)
SPI	UCA0STE	34	28	31	22	I/O	eUSCI_A0 SPI slave transmit enable
	UCA0CLK	33	27	30	21	I/O	eUSCI_A0 SPI clock input/output
	UCA0SOMI	32	26	29	20	I/O	eUSCI_A0 SPI slave out/master in
	UCA0SIMO	31	25	28	19	I/O	eUSCI_A0 SPI slave in/master out
	UCA1STE	26	20	23	16	I/O	eUSCI_A1 SPI slave transmit enable
	UCA1CLK	25	19	22	15	I/O	eUSCI_A1 SPI clock input/output
	UCA1SOMI	24	18	21	14	I/O	eUSCI_A1 SPI slave out/master in
	UCA1SIMO	23	17	20	13	I/O	eUSCI_A1 SPI slave in/master out
	UCB0STE	3	2	7	2	I/O	eUSCI_B0 slave transmit enable
	UCB0CLK	2	1	6	1	I/O	eUSCI_B0 clock input/output
	UCB0SIMO	1	40	5	32	I/O	eUSCI_B0 SPI slave in/master out
	UCB0SOMI	48	39	4	31	I/O	eUSCI_B0 SPI slave out/master in
	UCB1STE	15	14	19	–	I/O	eUSCI_B1 slave transmit enable
	UCB1CLK	14	13	18	–	I/O	eUSCI_B1 clock input/output
	UCB1SIMO	13	12	17	–	I/O	eUSCI_B1 SPI slave in/master out
	UCB1SOMI	12	11	16	–	I/O	eUSCI_B1 SPI slave out/master in
I^2C	UCB0SCL	48	39	4	31	I/O	eUSCI_B0 I^2C clock
	UCB0SDA	1	40	5	32	I/O	eUSCI_B0 I^2C data
	UCB1SCL	12	11	16	11	I/O	eUSCI_B1 I^2C clock
	UCB1SDA	13	12	17	12	I/O	eUSCI_B1 I^2C data

Copyright © 2018–2019, Texas Instruments Incorporated

表 4-2. Signal Descriptions (continued)

FUNCTION	SIGNAL NAME	PIN NUMBER(1)				PIN TYPE(2)	DESCRIPTION
		PT	RHA	DBT	RSM		
Timer_B	TB0.1	32	26	29	20	I/O	Timer TB0 CCR1 capture: CCI1A input, compare: Out1 output
	TB0.2	31	25	28	19	I/O	Timer TB0 CCR2 capture: CCI2A input compare: Out2 output
	TB0TRG	1	40	5	32	I	TB0 external trigger input for TB0OUTH
	TB0CLK	8	7	12	7	I	Timer clock input TBCLK for TB0
	TB1.1	30	24	27	18	I/O	Timer TB1 CCR1 capture: CCI1A input compare: Out1 output
	TB1.2	29	23	26	17	I/O	Timer TB1 CCR2 capture: CCI2A input compare: Out2 output
	TB1CLK	28	22	25	–	I	Timer clock input TBCLK for TB1
	TB1TRG	27	21	24	–	I	TB1 external trigger input for TB1OUTH
	TB2.1	43	34	37	–	I/O	Timer TB2 CCR1 capture: CCI1A input compare: Out1 output
	TB2.2	42	33	36	–	I/O	Timer TB2 CCR2 capture: CCI2A input compare: Out2 output
	TB2CLK	41	–	–	–	I	Timer clock input TBCLK for TB2
	TB2TRG	40	–	–	–	I	TB2 external trigger input for TB2OUTH
	TB3.1	22	16	–	–	I/O	Timer TB3 CCR1 capture: CCI1A input compare: Out1 output
	TB3.2	21	15	–	–	I/O	Timer TB3 CCR2 capture: CCI2A input compare: Out2 output
	TB3.3	20	–	–	–	I/O	Timer TB3 CCR3 capture: CCI3A input compare: Out3 output
	TB3.4	19	–	–	–	I/O	Timer TB3 CCR4 capture: CCI4A input compare: Out4 output
	TB3.5	18	–	–	–	I/O	Timer TB3 CCR5 capture: CCI5A input compare: Out5 outputs
	TB3.6	17	–	–	–	I/O	Timer TB3 CCR6 capture: CCI6A input compare: Out6 output
	TB3CLK	16	–	–	–	I	Timer clock input TBCLK for TB3
MFM	TX	42	33	36	–	O	Manchester function module transmit
	RX	43	34	37	–	I	Manchester function module receive
VQFN thermal pad		–	Pad	–	Pad	–	Connect the exposed thermal pad to VSS.

4.4 Pin Multiplexing

Pin multiplexing for these devices is controlled by both register settings and operating modes (for example, if the device is in test mode). For details of the settings for each pin and diagrams of the multiplexed ports, see 6.11.

4.5 Buffer Type

表 4-3 defines the pin buffer types that are listed in 表 4-1.

表 4-3. Buffer Type

BUFFER TYPE (STANDARD)	NOMINAL VOLTAGE	HYSTERESIS	PU OR PD	NOMINAL PU OR PD STRENGTH (µA)	OUTPUT DRIVE STRENGTH (mA)	OTHER CHARACTERISTICS
LVCMOS	3.0 V	Y (1)	Programmable	See 5.12.5	See 5.12.5	
Analog	3.0 V	N	N/A	N/A	N/A	See the analog modules in 5 for details
Power (DVCC)	3.0 V	N	N/A	N/A	N/A	SVS enables hysteresis on DVCC
Power (AVCC)	3.0 V	N	N/A	N/A	N/A	

(1) Only for input pins

4.6 Connection of Unused Pins

表 4-4 lists the correct termination of unused pins.

表 4-4. Connection of Unused Pins (1)

PIN	POTENTIAL	COMMENT
Px.0 to Px.7	Open	Set to port function, output direction (PxDIR.n = 1)
$\overline{\text{RST}}$/NMI	DVCC	47-kΩ pullup or internal pullup selected with 10-nF (or 1.1-nF) pulldown (2)
TEST	Open	This pin always has an internal pulldown enabled.

(1) Any unused pin with a secondary function that is shared with general-purpose I/O should follow the Px.0 to Px.7 unused pin connection guidelines.
(2) The pulldown capacitor should not exceed 1.1 nF when using devices with Spy-Bi-Wire interface in Spy-Bi-Wire mode with TI tools like FET interfaces or GANG programmers.

Copyright © 2018–2019, Texas Instruments Incorporated

5 Specifications

5.1 Absolute Maximum Ratings(1)

over operating free-air temperature range (unless otherwise noted)

	DEVICE GRADE	MIN	MAX	UNIT
Voltage applied at DVCC pin to V_{SS}	T	–0.3	4.1	V
Voltage applied to any pin(2)	T	–0.3	V_{CC} + 0.3 4.1 V Max	V
Current across the whole chip including IO currents	T		+50	mA
Diode current at any device pin	T		±2	mA
Maximum junction temperature, T_J	T		115	°C
Storage temperature, T_{stg} (3)	T	–40	125	°C

(1) Stresses beyond those listed under *Absolute Maximum Ratings* can cause permanent damage to the device. These are stress ratings only, and functional operation of the device at these or any other conditions beyond those indicated under *Recommended Operating Conditions* is not implied. Exposure to absolute-maximum-rated conditions for extended periods can affect device reliability.
(2) All voltages referenced to V_{SS}.
(3) Higher temperature may be applied during board soldering according to the current JEDEC J-STD-020 specification with peak reflow temperatures not higher than classified on the device label on the shipping boxes or reels.

5.2 ESD Ratings

over operating free-air temperature range (unless otherwise noted)

			DEVICE GRADE	VALUE	UNIT
$V_{(ESD)}$	Electrostatic discharge	Human-body model (HBM), per ANSI/ESDA/JEDEC JS-001(1)	T	±1000	V
		Charged-device model (CDM), per JEDEC specification JESD22-C101(2)	T	±250	

(1) JEDEC document JEP155 states that 500-V HBM allows safe manufacturing with a standard ESD control process. Manufacturing with less than 500-V HBM is possible with the necessary precautions. Pins listed as ±1000 V may actually have higher performance.
(2) JEDEC document JEP157 states that 250-V CDM allows safe manufacturing with a standard ESD control process. Manufacturing with less than 250-V CDM is possible with the necessary precautions. Pins listed as ±250 V may actually have higher performance.

5.3 Recommended Operating Conditions

			DEVICE GRADE	MIN	NOM	MAX	UNIT
V_{CC}	Supply voltage applied at DVCC pin(1) (2)(3) (4)		T	1.8		3.6	V
V_{SS}	Supply voltage applied at DVSS pin		T		0		V
T_A	Operating free-air temperature		T	–40		105	°C
T_J	Operating junction temperature		T	–40		115	°C
C_{DVCC}	Recommended capacitor at DVCC(5)		T	4.7	10		µF
f_{SYSTEM}	Processor frequency (maximum MCLK frequency)(4)(6)	No FRAM wait states (NWAITSx = 0)	T	0		8	MHz
		With FRAM wait states (NWAITSx = 1)(7)	T	0		16	
		With FRAM wait states (NWAITSx = 2)(7)	T	0		24(8)	

(1) Supply voltage changes faster than 0.2 V/µs can trigger a BOR reset even within the recommended supply voltage range. Following the data sheet recommendation for capacitor C_{DVCC} limits the slopes accordingly.
(2) Modules can have a different supply voltage range specification. See the specification of the respective module in this data sheet.
(3) TI recommends that power to the DVCC pin must not exceed the limits specified in *Recommended Operating Conditions*. Exceeding the specified limits can cause malfunction of the device including erroneous writes to RAM and FRAM.
(4) The minimum supply voltage is defined by the SVS levels. See the SVS threshold parameters in 表 5-1.
(5) A capacitor tolerance of ±20% or better is required. A low-ESR ceramic capacitor of 100 nF (minimum) should be placed as close as possible (within a few millimeters) to the respective pin pair.
(6) Modules can have a different maximum input clock specification. See the specification of the respective module in this data sheet.
(7) Wait states only occur on actual FRAM accesses (that is, on FRAM cache misses). RAM and peripheral accesses are always executed without wait states.
(8) If clock sources such as HF crystals or the DCO with frequencies >24 MHz are used, the clock must be divided in the clock system to comply with this operating condition.

Copyright © 2018–2019, Texas Instruments Incorporated

Recommended Operating Conditions *(continued)*

		DEVICE GRADE	MIN	NOM	MAX	UNIT
f_{ACLK}	Maximum ACLK frequency	T			40	kHz
f_{SMCLK}	Maximum SMCLK frequency	T			24 (8)	MHz

5.4 Active Mode Supply Current Into V_{CC} Excluding External Current

over operating free-air temperature range (unless otherwise noted) (1)

PARAMETER	EXECUTION MEMORY	TEST CONDITIONS	DEVICE GRADE	Frequency ($f_{MCLK} = f_{SMCLK}$)								UNIT
				1 MHz 0 WAIT STATES (NWAITSx = 0)		8 MHz 0 WAIT STATES (NWAITSx = 0)		16 MHz 1 WAIT STATE (NWAITSx = 1)		24 MHz 2 WAIT STATES (NWAITSx = 2)		
				TYP	MAX	TYP	MAX	TYP	MAX	TYP	MAX	
$I_{AM,\ FRAM}$(0%)	FRAM 0% cache hit ratio	3.0 V, 25°C	T	555		3084		3411		3692		µA
		3.0 V, 85°C	T	575		3207		3519		3807		
		3.0 V, 105°C	T	583		3233		3545		3833		
$I_{AM,\ FRAM}$(100%)	FRAM 100% cache hit ratio	3.0 V, 25°C	T	261		724		1245		1772		µA
		3.0 V, 85°C	T	272		742		1267		1800		
		3.0 V, 105°C	T	283		753		1281		1817		
$I_{AM,\ RAM}$ (2)	RAM	3.0 V, 25°C	T	285		917		1627		2355		µA

(1) All inputs are tied to 0 V or to V_{CC}. Outputs do not source or sink any current. Characterized with program executing typical data processing.
f_{ACLK} = 32768 Hz, $f_{MCLK} = f_{SMCLK} = f_{DCO}$ at specified frequency
Program and data entirely reside in FRAM. All execution is from FRAM.
(2) Program and data reside entirely in RAM. All execution is from RAM. No access to FRAM.

5.5 Active Mode Supply Current Per MHz

V_{CC} = 3.0 V, T_A = 25°C (unless otherwise noted)

PARAMETER		TEST CONDITIONS	DEVICE GRADE	MIN	TYP	MAX	UNIT
$dI_{AM,FRAM}/df$	Active mode current consumption per MHz, execution from FRAM, no wait states (1)	($I_{AM,\ 75\%\ cache\ hit\ rate}$ at 8 MHz – $I_{AM,\ 75\%\ cache\ hit\ rate}$ at 1 MHz) / 7 MHz	T		142		µA/MHz

(1) All peripherals are turned on in default settings.

5.6 Low-Power Mode LPM0 Supply Currents Into V_{CC} Excluding External Current

V_{CC} = 3.0 V, T_A = 25°C (unless otherwise noted) (1) (2)

PARAMETER		V_{CC}	DEVICE GRADE	FREQUENCY (f_{SMCLK})								UNIT
				1 MHz		8 MHz		16 MHz		24 MHz		
				TYP	MAX	TYP	MAX	TYP	MAX	TYP	MAX	
I_{LPM0}	Low-power mode 0 supply current	2.0 V	T	199		312		437		637		µA
		3.0 V	T	211		324		449		649		

(1) All inputs are tied to 0 V or to V_{CC}. Outputs do not source or sink any current.
(2) Current for watchdog timer clocked by SMCLK included.
f_{ACLK} = 32768 Hz, f_{MCLK} = 0 MHz, f_{SMCLK} at specified frequency.

Copyright © 2018–2019, Texas Instruments Incorporated

5.7 Low-Power Mode LPM3 and LPM4 Supply Currents (Into V_{CC}) Excluding External Current

over recommended ranges of supply voltage and operating free-air temperature (unless otherwise noted) (1)

PARAMETER		DEVICE GRADE	V_{CC}	–40°C		25°C		85°C		105°C		UNIT
				TYP	MAX	TYP	MAX	TYP	MAX	TYP	MAX	
$I_{LPM3,XT1}$	Low-power mode 3, includes SVS (2) (3) (4)	T	3.0 V	1.21		1.49		6.35	21.85	13.29	47.87	µA
$I_{LPM3,XT1}$	Low-power mode 3, includes SVS (2) (3) (4)	T	2.0 V	1.18		1.45		6.28		13.17		µA
$I_{LPM3,VLO}$	Low-power mode 3, VLO, excludes SVS (5)	T	3.0 V	1.01		1.29		6.15	21.65	13.1	47.67	µA
$I_{LPM3,VLO}$	Low-power mode 3, VLO, excludes SVS (5)	T	2.0 V	0.99		1.26		6.09		12.98		µA
$I_{LPM3,\ RTC}$	Low-power mode 3, RTC, excludes SVS (6)	T	3.0 V	1.15		1.43		6.29		13.24		µA
$I_{LPM3,\ RTC}$	Low-power mode 3, RTC, excludes SVS (6)	T	2.0 V	1.13		1.41		6.23		13.13		µA
$I_{LPM4,\ SVS}$	Low-power mode 4, includes SVS	T	3.0 V	0.74		1.00		5.83		12.73		µA
$I_{LPM4,\ SVS}$	Low-power mode 4, includes SVS	T	2.0 V	0.72		0.98		5.77		12.62		µA
I_{LPM4},	Low-power mode 4, excludes SVS	T	3.0 V	0.56		0.82		5.64		12.54		µA
I_{LPM4},	Low-power mode 4, excludes SVS	T	2.0 V	0.55		0.81		5.59		12.45		µA
$I_{LPM4,\ RTC,\ VLO}$	Low-power mode 4, RTC is sourced from VLO, excludes SVS (7)	T	3.0 V	0.66		0.93		5.76		12.67		µA
$I_{LPM4,\ RTC,\ VLO}$	Low-power mode 4, RTC is sourced from VLO, excludes SVS (7)	T	2.0 V	0.66		0.92		5.71		12.58		µA
$I_{LPM4,\ RTC,\ XT1}$	Low-power mode 4, RTC is sourced from XT1, excludes SVS (8)	T	3.0 V	1.06		1.34		6.21		13.15		µA
$I_{LPM4,\ RTC,\ XT1}$	Low-power mode 4, RTC is sourced from XT1, excludes SVS (8)	T	2.0 V	1.05		1.33		6.16		13.05		µA

(1) All inputs are tied to 0 V or to V_{CC}. Outputs do not source or sink any current
(2) Not applicable for devices with HF crystal oscillator only.
(3) Characterized with a Seiko Crystal SC-32S crystal with a load capacitance chosen to closely match the required load.
(4) Low-power mode 3, includes SVS test conditions:
Current for watchdog timer clocked by ACLK and RTC clocked by XT1 included. Current for brownout and SVS included (SVSHE = 1).
CPUOFF = 1, SCG0 = 1 SCG1 = 1, OSCOFF = 0 (LPM3),
f_{XT1} = 32768 Hz, $f_{ACLK} = f_{XT1}$, $f_{MCLK} = f_{SMCLK}$ = 0 MHz
(5) Low-power mode 3, VLO, excludes SVS test conditions:
Current for watchdog timer clocked by VLO included. RTC disabled. Current for brownout included. SVS disabled (SVSHE = 0).
CPUOFF = 1, SCG0 = 1 SCG1 = 1, OSCOFF = 0 (LPM3),
f_{XT1} = 32768 Hz, $f_{ACLK} = f_{MCLK} = f_{SMCLK}$ = 0 MHz
(6) RTC wakes every second with external 32768-Hz clock as source.
(7) Low-power mode 4, VLO, excludes SVS test conditions:
Current for RTC clocked by VLO included. RTC disabled. Current for brownout included. SVS disabled (SVSHE = 0).
CPUOFF = 1, SCG0 = 1 SCG1 = 1, OSCOFF = 1 (LPM4),
f_{XT1} = 32768 Hz, $f_{ACLK} = f_{MCLK} = f_{SMCLK}$ = 0 MHz
(8) Low-power mode 4, XT1, excludes SVS test conditions:
Current for RTC clocked by XT1 included. RTC disabled. Current for brownout included. SVS disabled (SVSHE = 0).
CPUOFF = 1, SCG0 = 1 SCG1 = 1, OSCOFF = 1 (LPM4),
f_{XT1} = 32768 Hz, $f_{ACLK} = f_{MCLK} = f_{SMCLK}$ = 0 MHz

Copyright © 2018–2019, Texas Instruments Incorporated

5.8 Low-Power Mode LPMx.5 Supply Currents (Into V_{CC}) Excluding External Current

over recommended ranges of supply voltage and operating free-air temperature (unless otherwise noted)

PARAMETER		DEVICE GRADE	V_{CC}	–40°C		25°C		85°C		105°C		UNIT
				TYP	MAX	TYP	MAX	TYP	MAX	TYP	MAX	
$I_{LPM3.5, XT1}$	Low-power mode 3.5, includes SVS(1) (2) (3) (also see 図 5-3)	T	3.0 V	0.57		0.62		0.89	2.06	1.27	3.21	µA
$I_{LPM3.5, XT1}$	Low-power mode 3.5, includes SVS(1) (2) (3) (also see 図 5-3)	T	2.0 V	0.55		0.59		0.84		1.19		µA
$I_{LPM4.5, SVS}$	Low-power mode 4.5, includes SVS(4)	T	3.0 V	0.27		0.29		0.41	0.63	0.61	1.13	µA
$I_{LPM4.5, SVS}$	Low-power mode 4.5, includes SVS(4)	T	2.0 V	0.25		0.27		0.37		0.55		µA
$I_{LPM4.5}$	Low-power mode 4.5, excludes SVS(5)	T	3.0 V	0.031		0.042		0.153	0.343	0.337	0.832	µA
$I_{LPM4.5}$	Low-power mode 4.5, excludes SVS(5)	T	2.0 V	0.025		0.036		0.128		0.289		µA

(1) Not applicable for devices with HF crystal oscillator only
(2) Characterized with a Seiko Crystal SC-32S crystal with a load capacitance chosen to closely match the required load.
(3) Low-power mode 3.5, includes SVS test conditions:
Current for RTC clocked by XT1 included. Current for brownout and SVS included (SVSHE = 1). Core regulator disabled.
PMMREGOFF = 1, CPUOFF = 1, SCG0 = 1 SCG1 = 1, OSCOFF = 1 (LPMx.5),
f_{XT1} = 32768 Hz, $f_{ACLK} = f_{XT1}$, $f_{MCLK} = f_{SMCLK}$ = 0 MHz
(4) Low-power mode 4.5, includes SVS test conditions:
Current for brownout and SVS included (SVSHE = 1). Core regulator disabled.
PMMREGOFF = 1, CPUOFF = 1, SCG0 = 1 SCG1 = 1, OSCOFF = 1 (LPMx.5),
f_{XT1} = 0 Hz, $f_{ACLK} = f_{MCLK} = f_{SMCLK}$ = 0 MHz
(5) Low-power mode 4.5, excludes SVS test conditions:
Current for brownout included. SVS disabled (SVSHE = 0). Core regulator disabled.
PMMREGOFF = 1, CPUOFF = 1, SCG0 = 1 SCG1 = 1, OSCOFF = 1 (LPMx.5),
f_{XT1} = 0 Hz, $f_{ACLK} = f_{MCLK} = f_{SMCLK}$ = 0 MHz

Copyright © 2018–2019, Texas Instruments Incorporated

5.9 Production Distribution of LPM Supply Currents

V_{CC} = 3 V

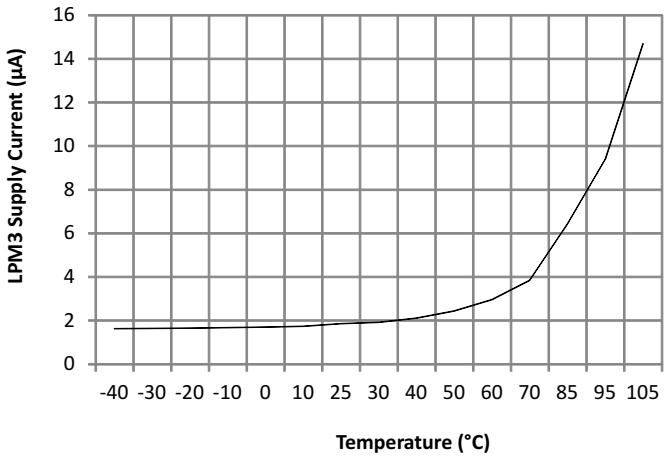

RTC enabled 12.5-pF crystal SVS disabled

図 5-1. Population vs Low-Power Mode 3 Supply Current

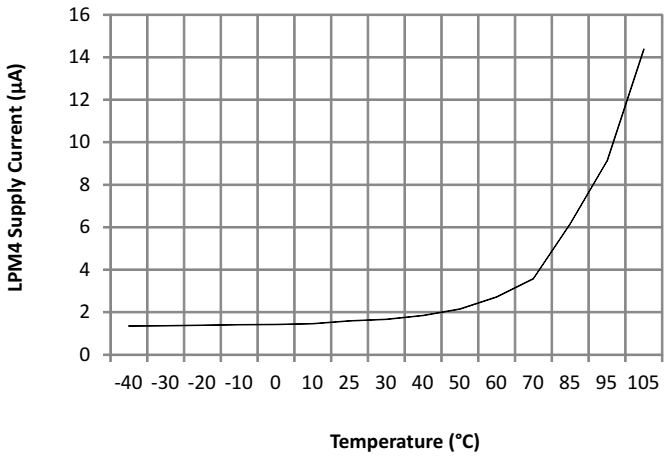

RTC enabled 12.5-pF crystal SVS disabled

図 5-2. Population vs Low-Power Mode 4 Supply Current

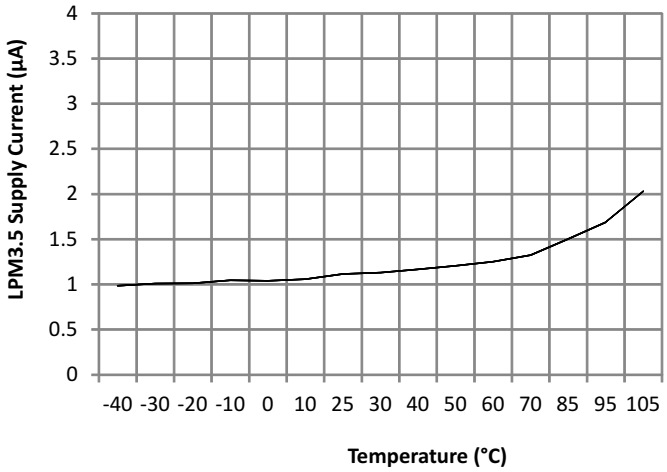

RTC enabled 12.5-pF crystal SVS enabled

図 5-3. LPM3.5 Supply Current vs Temperature

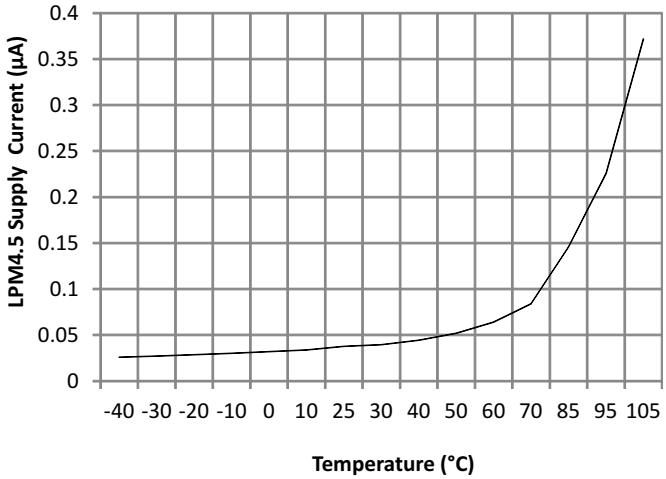

RTC disabled SVS disabled

図 5-4. LPM4.5 Supply Current vs Temperature

5.10 Typical Characteristics - Current Consumption Per Module

over recommended ranges of supply voltage and operating free-air temperature (unless otherwise noted)

MODULE	TEST CONDITIONS	REFERENCE CLOCK	DEVICE GRADE	TYP	UNIT
Timer_B		Module input clock	T	5	µA/MHz
eUSCI_A	UART mode	Module input clock	T	7	µA/MHz
eUSCI_A	SPI mode	Module input clock	T	5	µA/MHz
eUSCI_B	SPI mode	Module input clock	T	5	µA/MHz
eUSCI_B	I^2C mode, 100 kbaud	Module input clock	T	5	µA/MHz
RTC		32 kHz	T	85	nA
CRC	From start to end of operation	MCLK	T	8.5	µA/MHz

5.11 Thermal Resistance Characteristics

THERMAL METRIC[1]			VALUE[2]	UNIT
$R\theta_{JA}$	Junction-to-ambient thermal resistance, still air	QFP 48 pin (PT)	67.6	ºC/W
		QFN 40 pin (RHA)	31.6	
		TSSOP 38 pin (DBT)	67.0	
		QFN 32 pin (RSM)	32.3	
$R\theta_{JC}$	Junction-to-case (top) thermal resistance	QFP 48 pin (PT)	24.0	ºC/W
		QFN 40 pin (RHA)	24.1	
		TSSOP 38 pin (DBT)	19.8	
		QFN 32 pin (RSM)	27.8	
$R\theta_{JB}$	Junction-to-board thermal resistance	QFP 48 pin (PT)	31.6	ºC/W
		QFN 40 pin (RHA)	12.6	
		TSSOP 38 pin (DBT)	27.3	
		QFN 32 pin (RSM)	11.8	

(1) For more information about traditional and new thermal metrics, see *Semiconductor and IC Package Thermal Metrics*.
(2) These values are based on a JEDEC-defined 2S2P system (with the exception of the Theta JC ($R\theta_{JC}$) value, which is based on a JEDEC-defined 1S0P system) and will change based on environment and application. For more information, see these EIA/JEDEC standards:
- JESD51-2, *Integrated Circuits Thermal Test Method Environmental Conditions - Natural Convection (Still Air)*
- JESD51-3, *Low Effective Thermal Conductivity Test Board for Leaded Surface Mount Packages*
- JESD51-7, *High Effective Thermal Conductivity Test Board for Leaded Surface Mount Packages*
- JESD51-9, *Test Boards for Area Array Surface Mount Package Thermal Measurements*

Copyright © 2018–2019, Texas Instruments Incorporated

5.12 Timing and Switching Characteristics

5.12.1 Power Supply Sequencing

図 5-5 shows the power cycle and reset conditions.

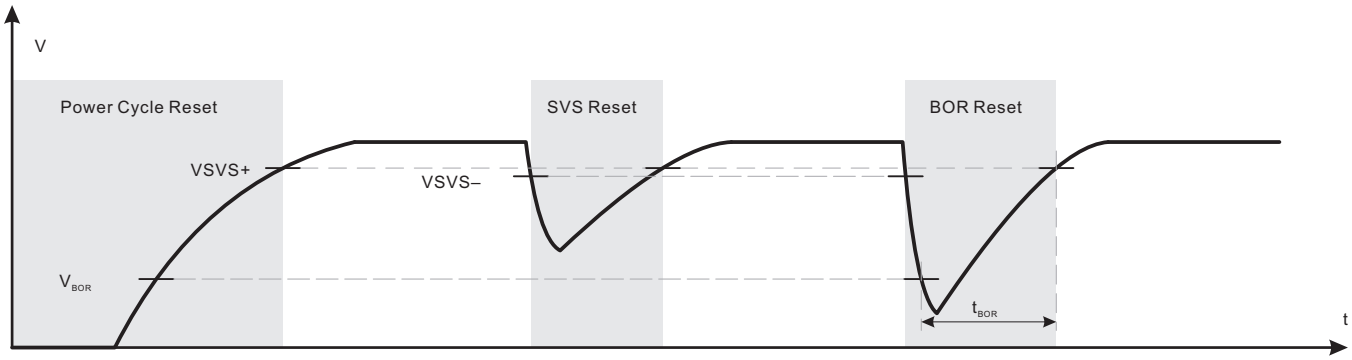

図 5-5. Power Cycle, SVS, and BOR Reset Conditions

表 5-1 lists the characteristics of the SVS and BOR.

表 5-1. PMM, SVS and BOR

over recommended ranges of supply voltage and operating free-air temperature (unless otherwise noted)

PARAMETER		TEST CONDITIONS	DEVICE GRADE	MIN	TYP	MAX	UNIT
$V_{BOR, safe}$	Safe BOR power-down level(1)		T	0.1			V
$t_{BOR, safe}$	Safe BOR reset delay(2)		T	10			ms
$I_{SVSH,AM}$	SVS_H current consumption, active mode	V_{CC} = 3.6 V	T			1.5	µA
$I_{SVSH,LPM}$	SVS_H current consumption, low-power modes	V_{CC} = 3.6 V	T		240		nA
V_{SVSH-}	SVS_H power-down level(3)		T	1.71	1.80	1.87	V
V_{SVSH+}	SVS_H power-up level(3)		T	1.76	1.88	1.99	V
V_{SVSH_hys}	SVS_H hysteresis		T		100		mV
$t_{PD,SVSH, AM}$	SVS_H propagation delay, active mode		T			10	µs
$t_{PD,SVSH, LPM}$	SVS_H propagation delay, low-power modes		T			100	µs

(1) A safe BOR can only be correctly generated only if DVCC must drop below this voltage before it rises.
(2) When an BOR occurs, a safe BOR can only be correctly generated only if DVCC is kept low longer than this period before it reaches V_{SVSH+}.
(3) For additional information, see the Dynamic Voltage Scaling Power Solution for MSP430 Devices With Single-Channel LDO Reference Design.

5.12.2 Reset Timing

表 5-2 lists the device wake-up times.

表 5-2. Wake-up Times From Low-Power Modes and Reset

over recommended ranges of supply voltage and operating free-air temperature (unless otherwise noted)

PARAMETER		TEST CONDITIONS	DEVICE GRADE	V_{CC}	MIN	TYP	MAX	UNIT
$t_{WAKE\text{-}UP\ FRAM}$	(Additional) wake-up time to activate the FRAM in AM if previously disabled through the FRAM controller or from a LPM if immediate activation is selected for wake-up (1)		T	3 V		10		µs
$t_{WAKE\text{-}UP\ LPM0}$	Wake-up time from LPM0 to active mode (1)		T	3 V			200 ns + 2.5 / f_{DCO}	
$t_{WAKE\text{-}UP\ LPM3}$	Wake-up time from LPM3 to active mode (1)		T	3 V		10		µs
$t_{WAKE\text{-}UP\ LPM4}$	Wake-up time from LPM4 to active mode (2)		T	3 V		10		µs
$t_{WAKE\text{-}UP\ LPM3.5}$	Wake-up time from LPM3.5 to active mode (2)		T	3 V		350		µs
$t_{WAKE\text{-}UP\ LPM4.5}$	Wake-up time from LPM4.5 to active mode (2)	SVSHE = 1	T	3 V		350		µs
		SVSHE = 0	T	3 V		1		ms
$t_{WAKE\text{-}UP\text{-}RESET}$	Wake-up time from $\overline{RST}$ or BOR event to active mode (2)		T	3 V		1		ms
t_{RESET}	Pulse duration required at $\overline{RST}$/NMI pin to accept a reset		T		2			µs

(1) The wake-up time is measured from the edge of an external wake-up signal (for example, port interrupt or wake-up event) to the first externally observable MCLK clock edge.
(2) The wake-up time is measured from the edge of an external wake-up signal (for example, port interrupt or wake-up event) until the first instruction of the user program is executed.

Copyright © 2018–2019, Texas Instruments Incorporated

5.12.3 Clock Specifications

表 5-3 lists the characteristics of XT1 in low-frequency mode.

表 5-3. XT1 Crystal Oscillator (Low Frequency)

over recommended ranges of supply voltage and operating free-air temperature (unless otherwise noted)[(1)(2)]

PARAMETER		TEST CONDITIONS	DEVICE GRADE	MIN	TYP	MAX	UNIT
$f_{XT1,\ LF}$	XT1 oscillator crystal, low frequency	LFXTBYPASS = 0	T		32768		Hz
$DC_{XT1,\ LF}$	XT1 oscillator LF duty cycle	Measured at MCLK, f_{LFXT} = 32768 Hz	T	30%		70%	
$f_{XT1,SW}$	XT1 oscillator logic-level square-wave input frequency	LFXTBYPASS = 1[(3)(4)]	T		32768		Hz
$DC_{XT1,SW}$	LFXT oscillator logic-level square-wave input duty cycle	LFXTBYPASS = 1	T	40%		60%	
OA_{LFXT}	Oscillation allowance for LF crystals[(5)]	LFXTBYPASS = 0, LFXTDRIVE = {3}, f_{LFXT} = 32768 Hz, $C_{L,eff}$ = 12.5 pF	T		200		kΩ
$C_{L,eff}$	Integrated effective load capacitance[(6)]	[(7)]	T		1		pF
$t_{START,LFXT}$	Start-up time[(8)]	f_{OSC} = 32768 Hz, LFXTBYPASS = 0, LFXTDRIVE = {3}, T_A = 25°C, $C_{L,eff}$ = 12.5 pF	T		1000		ms
$f_{Fault,LFXT}$	Oscillator fault frequency[(9)]	XTS = 0[(10)]	T	0		3500	Hz

(1) To improve EMI on the LFXT oscillator, observe the following guidelines.
- Keep the trace between the device and the crystal as short as possible.
- Design a good ground plane around the oscillator pins.
- Prevent crosstalk from other clock or data lines into oscillator pins XIN and XOUT.
- Avoid running PCB traces underneath or adjacent to the XIN and XOUT pins.
- Use assembly materials and processes that avoid any parasitic load on the oscillator XIN and XOUT pins.
- If conformal coating is used, make sure that it does not induce capacitive or resistive leakage between the oscillator pins.

(2) See MSP430 32-kHz Crystal Oscillators for details on crystal section, layout, and testing.
(3) When LFXTBYPASS is set, LFXT circuits are automatically powered down. Input signal is a digital square wave with parametrics defined in the Schmitt-trigger inputs section of this data sheet. Duty cycle requirements are defined by $DC_{LFXT,SW}$.
(4) Maximum frequency of operation of the entire device cannot be exceeded.
(5) Oscillation allowance is based on a safety factor of 5 for recommended crystals. The oscillation allowance is a function of the LFXTDRIVE settings and the effective load. In general, comparable oscillator allowance can be achieved based on the following guidelines, but should be evaluated based on the actual crystal selected for the application:
- For LFXTDRIVE = {0}, $C_{L,eff}$ = 3.7 pF
- For LFXTDRIVE = {1}, 6 pF ≤ $C_{L,eff}$ ≤ 9 pF
- For LFXTDRIVE = {2}, 6 pF ≤ $C_{L,eff}$ ≤ 10 pF
- For LFXTDRIVE = {3}, 6 pF ≤ $C_{L,eff}$ ≤ 12 pF

(6) Includes parasitic bond and package capacitance (approximately 2 pF per pin).
(7) Requires external capacitors at both terminals to meet the effective load capacitance specified by crystal manufacturers. Recommended effective load capacitance values supported are 3.7 pF, 6 pF, 9 pF, and 12.5 pF. Maximum shunt capacitance of 1.6 pF. The PCB adds additional capacitance, so it must also be considered in the overall capacitance. Verify that the recommended effective load capacitance of the selected crystal is met.
(8) Includes startup counter of 1024 clock cycles.
(9) Frequencies above the MAX specification do not set the fault flag. Frequencies between the MIN and MAX specifications might set the flag. A static condition or stuck at fault condition sets the flag.
(10) Measured with logic-level input frequency but also applies to operation with crystals.

Copyright © 2018–2019, Texas Instruments Incorporated

表 5-4 lists the characteristics of XT1 in high-frequency mode.

表 5-4. XT1 Crystal Oscillator (High Frequency)

over recommended ranges of supply voltage and operating free-air temperature (unless otherwise noted)[1]

PARAMETER		TEST CONDITIONS	DEVICE GRADE	MIN	TYP	MAX	UNIT
f_{HFXT}	HFXT oscillator crystal frequency, crystal mode	XT1BYPASS = 0, XTS = 1, XT1HFFREQ = 00	T	1		4	MHz
		XT1BYPASS = 0, XTS = 1, XT1HFFREQ = 01	T	4.01		6	
		XT1BYPASS = 0, XTS = 1, XT1HFFREQ = 10	T	6.01		16	
		XT1BYPASS = 0, XTS = 1, XT1HFFREQ = 11	T	16.01		24	
$f_{HFXT,SW}$	HFXT oscillator logic-level square-wave input frequency, bypass mode	XT1BYPASS = 1, XTS = 1 [2] [3]	T	1		24	MHz
DC_{HFXT}	HFXT oscillator duty cycle.	Measured at ACLK, $f_{HFXT,HF}$ = 4 MHz[4]	T	40%		60%	
$DC_{HFXT,SW}$	HFXT oscillator logic-level square-wave input duty cycle	XT1BYPASS = 1	T	40%		60%	
OA_{HFXT}	Oscillation allowance for HFXT crystals[5]	XT1BYPASS = 0, XT1HFSEL = 1 $f_{HFXT,HF}$ = 24 MHz, $C_{L,eff}$ = 18 pF	T		3.1		Ω
$t_{START,HFXT}$	Start-up time[6]	f_{OSC} = 4 MHz, XTS = 1[4] XT1BYPASS = 0, XT1HFFREQ = 00, XT1DRIVE = 3, T_A = 25°C, $C_{L,eff}$ = 18 pF	T		1.6		ms
		f_{OSC} = 24 MHz, XTS = 1[4] XT1BYPASS = 0, XT1HFFREQ = 00, XT1DRIVE = 3, T_A = 25°C, $C_{L,eff}$ = 18 pF	T		1.1		
$C_{L,eff}$	Integrated effective load capacitance[7] [8]		T		1		pF
$f_{Fault,HFXT}$	Oscillator fault frequency[9] [10]		T	0		800	kHz

(1) To improve EMI on the HFXT oscillator, observe the following guidelines.
- Keep the trace between the device and the crystal as short as possible.
- Design a good ground plane around the oscillator pins.
- Prevent crosstalk from other clock or data lines into oscillator pins XIN and XOUT.
- Avoid running PCB traces underneath or adjacent to the XIN and XOUT pins.
- Use assembly materials and processes that avoid any parasitic load on the oscillator XIN and XOUT pins.
- If conformal coating is used, make sure that it does not induce capacitive or resistive leakage between the oscillator pins.

(2) When XT1BYPASS is set, HFXT circuits are automatically powered down. Input signal is a digital square wave with parametrics defined in the Schmitt-trigger Inputs section of this datasheet. Duty cycle requirements are defined by $DC_{HFXT,SW}$.
(3) Maximum frequency of operation of the entire device cannot be exceeded.
(4) The 4-MHz crystal used for lab characterization is the Abracon HC49/U AB-4.000MHZ-B2. The 16-MHz crystal used for lab characterization is the Abracon HC49/U AB-16.000MHZ-B2.
(5) Oscillation allowance is based on a safety factor of 5 for recommended crystals.
(6) Includes startup counter of 4096 clock cycles.
(7) Includes parasitic bond and package capacitance (approximately 2 pF per pin).
Because the PCB adds additional capacitance, TI recommends verifying the correct load by measuring the oscillator frequency through MCLK or SMCLK. For a correct setup, the effective load capacitance should always match the specification of the used crystal.
(8) Requires external capacitors at both terminals. Values are specified by crystal manufacturers. Recommended values supported are 14 pF, 16 pF, and 18 pF. The maximum shunt capacitance is 7 pF.
(9) Frequencies above the MAX specification do not set the fault flag. Frequencies between the MIN and MAX specifications might set the flag. A static condition or stuck at fault condition sets the flag.
(10) Measured with logic-level input frequency but also applies to operation with crystals.

Copyright © 2018–2019, Texas Instruments Incorporated

表 5-5 lists the frequency characteristics of the DCO FLL.

表 5-5. DCO FLL, Frequency

Over recommended operating free-air temperature (unless otherwise noted)

PARAMETER		TEST CONDITIONS	DEVICE GRADE	V_{CC}	MIN	TYP	MAX	UNIT
$f_{DCO, FLL}$	FLL lock frequency, 24 MHz, 25°C	Measured at MCLK, internal trimmed REFO as reference	T	3.0 V	–1.0%		1.0%	
$f_{DCO, FLL}$	FLL lock frequency, 24 MHz	Measured at MCLK, internal trimmed REFO as reference	T	3.0 V	–2.0%		2.0%	
$f_{DCO, FLL}$	FLL lock frequency, 24 MHz	Measured at MCLK, XT1 crystal as reference	T	3.0 V	–0.5%		0.5%	
f_{DUTY}	Duty cycle	Measured at MCLK, XT1 crystal as reference	T	3.0 V	40%	50%	60%	
$Jitter_{cc}$	Cycle-to-cycle jitter, 24 MHz	Measured at MCLK, XT1 crystal as reference	T	3.0 V		0.50%		
$Jitter_{long}$	Long-term Jitter, 24 MHz	Measured at MCLK, XT1 crystal as reference	T	3.0 V		0.022%		
$t_{FLL, lock}$	FLL lock time	Measured at MCLK, XT1 crystal as reference	T	3.0 V		200		ms

表 5-6 lists the frequency characteristics of the DCO.

表 5-6. DCO Frequency

Over recommended operating free-air temperature (unless otherwise noted)

PARAMETER		TEST CONDITIONS	DEVICE GRADE	V_{CC}	MIN	TYP	MAX	UNIT
$f_{DCO, 24MHz}$	DCO frequency 24 MHz	DCORSEL = 111b, DISMOD = 1b, DCOFTRIM = 000b, DCO = 0	T	3.0 V		12.6		MHz
		DCORSEL = 111b, DISMOD = 1b, DCOFTRIM = 000b, DCO = 511	T	3.0 V		20.5		
		DCORSEL = 111b, DISMOD = 1b, DCOFTRIM = 111b, DCO = 0	T	3.0 V		29.9		
		DCORSEL = 111b, DISMOD = 1b, DCOFTRIM = 111b, DCO = 511	T	3.0 V		48.2		
$f_{DCO, 20MHz}$	DCO frequency 20 MHz	DCORSEL = 110b, DISMOD = 1b, DCOFTRIM = 000b, DCO = 0	T	3.0 V		10.5		MHz
		DCORSEL = 110b, DISMOD = 1b, DCOFTRIM = 000b, DCO = 511	T	3.0 V		17.2		
		DCORSEL = 110b, DISMOD = 1b, DCOFTRIM = 111b, DCO = 0	T	3.0 V		25.1		
		DCORSEL = 110b, DISMOD = 1b, DCOFTRIM = 111b, DCO = 511	T	3.0 V		40.4		
$f_{DCO, 16MHz}$	DCO frequency 16 MHz	DCORSEL = 101b, DISMOD = 1b, DCOFTRIM = 000b, DCO = 0	T	3.0 V		8.3		MHz
		DCORSEL = 101b, DISMOD = 1b, DCOFTRIM = 000b, DCO = 511	T	3.0 V		13.6		
		DCORSEL = 101b, DISMOD = 1b, DCOFTRIM = 111b, DCO = 0	T	3.0 V		19.9		
		DCORSEL = 101b, DISMOD = 1b, DCOFTRIM = 111b, DCO = 511	T	3.0 V		32.2		

Copyright © 2018–2019, Texas Instruments Incorporated

表 5-6. DCO Frequency (continued)

Over recommended operating free-air temperature (unless otherwise noted)

PARAMETER		TEST CONDITIONS	DEVICE GRADE	V_{CC}	MIN	TYP	MAX	UNIT
$f_{DCO, 12MHz}$	DCO frequency 12 MHz	DCORSEL = 100b, DISMOD = 1b, DCOFTRIM = 000b, DCO = 0	T	3.0 V		6.2		MHz
		DCORSEL = 100b, DISMOD = 1b, DCOFTRIM = 000b, DCO = 511	T	3.0 V		10.2		
		DCORSEL = 100b, DISMOD = 1b, DCOFTRIM = 111b, DCO = 0	T	3.0 V		15		
		DCORSEL = 100b, DISMOD = 1b, DCOFTRIM = 111b, DCO = 511	T	3.0 V		24.3		
$f_{DCO, 8MHz}$	DCO frequency 8 MHz	DCORSEL = 011b, DISMOD = 1b, DCOFTRIM = 000b, DCO = 0	T	3.0 V		4.2		MHz
		DCORSEL = 011b, DISMOD = 1b, DCOFTRIM = 000b, DCO = 511	T	3.0 V		6.9		
		DCORSEL = 011b, DISMOD = 1b, DCOFTRIM = 111b, DCO = 0	T	3.0 V		10		
		DCORSEL = 011b, DISMOD = 1b, DCOFTRIM = 111b, DCO = 511	T	3.0 V		16.4		
$f_{DCO, 4MHz}$	DCO frequency 4 MHz	DCORSEL = 010b,, DISMOD = 1b, DCOFTRIM = 000b, DCO = 0	T	3.0 V		2		MHz
		DCORSEL = 010b, DISMOD = 1b, DCOFTRIM = 000b, DCO = 511	T	3.0 V		3.4		
		DCORSEL = 010b, DISMOD = 1b, DCOFTRIM = 111b, DCO = 0	T	3.0 V		5		
		DCORSEL = 010b, DISMOD = 1b, DCOFTRIM = 111b, DCO = 511	T	3.0 V		8.2		
$f_{DCO, 2MHz}$	DCO frequency 2 MHz	DCORSEL = 001b, DISMOD = 1b, DCOFTRIM = 000b, DCO = 0	T	3.0 V		1		MHz
		DCORSEL = 001b, DISMOD = 1b, DCOFTRIM = 000b, DCO = 511	T	3.0 V		1.7		
		DCORSEL = 001b, DISMOD = 1b, DCOFTRIM = 111b, DCO = 0	T	3.0 V		2.5		
		DCORSEL = 001b, DISMOD = 1b, DCOFTRIM = 111b, DCO = 511	T	3.0 V		4.2		
$f_{DCO, 1MHz}$	DCO frequency 1 MHz	DCORSEL = 000b, DISMOD = 1b, DCOFTRIM = 000b, DCO = 0	T	3.0 V		0.5		MHz
		DCORSEL = 000b, DISMOD = 1b, DCOFTRIM = 000b, DCO = 511	T	3.0 V		0.85		
		DCORSEL = 000b, DISMOD = 1b, DCOFTRIM = 111b, DCO = 0	T	3.0 V		1.2		
		DCORSEL = 000b, DISMOD = 1b, DCOFTRIM = 111b, DCO = 511	T	3.0 V		2.1		

Copyright © 2018–2019, Texas Instruments Incorporated

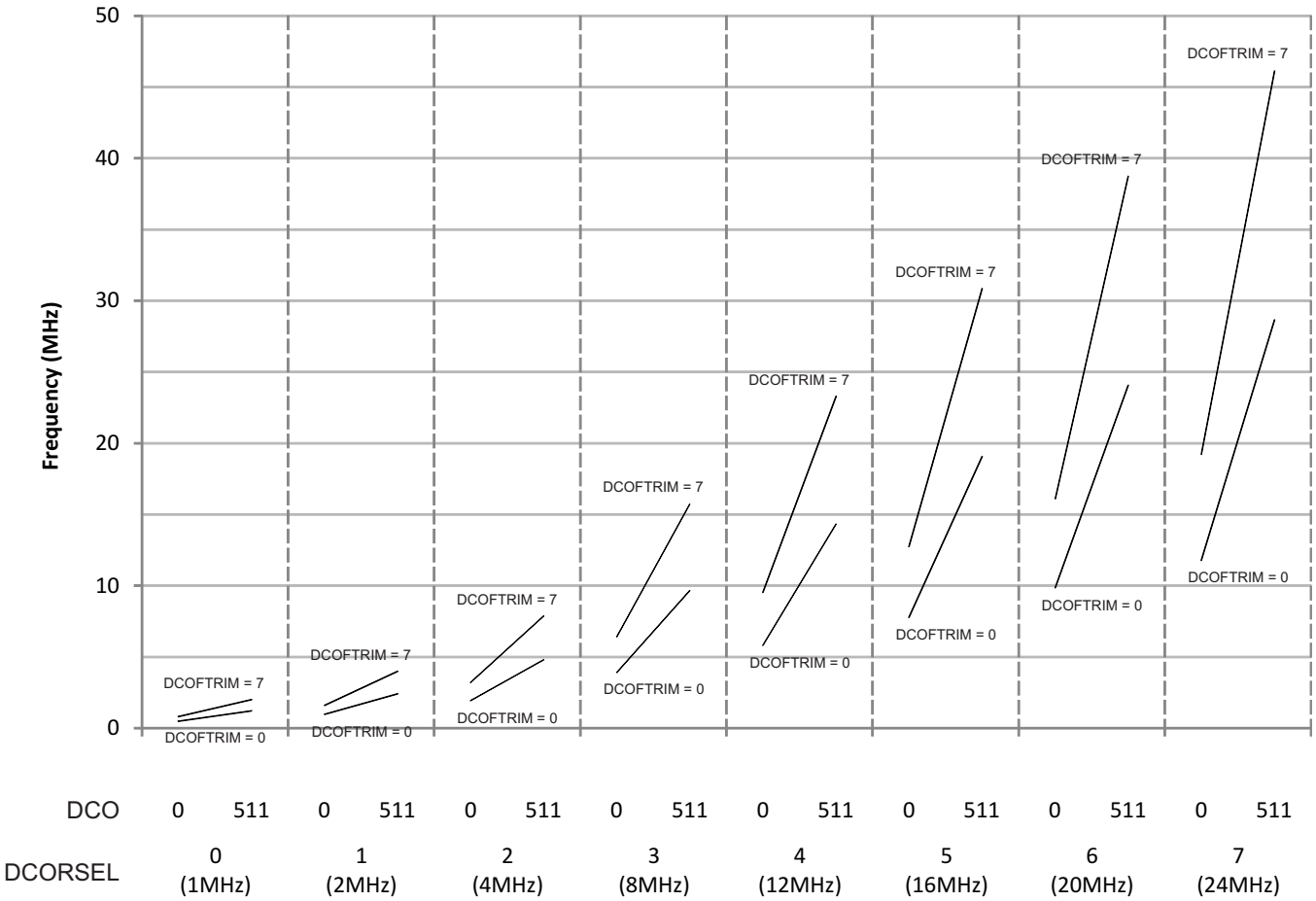

図 5-6. Typical DCO Frequency

表 5-7 lists the characteristics of the REFO.

表 5-7. REFO

over recommended operating free-air temperature (unless otherwise noted)

PARAMETER		TEST CONDITIONS	DEVICE GRADE	V_{CC}	MIN	TYP	MAX	UNIT
I_{REFO}	REFO oscillator current consumption	T_A = 25°C, HP mode (REFLP = 0)	T	3.0 V		15		µA
	REFO oscillator current consumption	T_A = 25°C, LP mode (REFLP = 1)	T	3.0 V		1		
f_{REFO}	REFO calibrated frequency	Measured at MCLK	T	3.0 V		32768		Hz
	REFO absolute calibrated tolerance	–40°C to 105°C	T	1.8 V to 3.6 V	–3.5%		+3.5%	
df_{REFO}/d_T	REFO frequency temperature drift	Measured at MCLK (1)	T	3.0 V		0.01		%/°C
df_{REFO}/d_{VCC}	REFO frequency supply voltage drift	Measured at MCLK at 25°C (2)	T	1.8 V to 3.6 V		1		%/V
f_{DC}	REFO duty cycle	Measured at MCLK	T	1.8 V to 3.6 V	40%	50%	60%	
t_{START}	REFO start-up time	40% to 60% duty cycle, HP mode (REFLP = 0)	T	3.0 V		72		µs
		40% to 60% duty cycle, LP mode (REFLP = 1)	T	3.0 V		75		

(1) Calculated using the box method: (MAX(–40°C to 105°C) – MIN(–40°C to 105°C)) / MIN(–40°C to 105°C) / (105°C – (–40°C))
(2) Calculated using the box method: (MAX(1.8 V to 3.6 V) – MIN(1.8 V to 3.6 V)) / MIN(1.8 V to 3.6 V) / (3.6 V – 1.8 V)

表 5-8 lists the characteristics of the VLO.

表 5-8. Internal Very-Low-Power Low-Frequency Oscillator (VLO)

over recommended ranges of supply voltage and operating free-air temperature (unless otherwise noted)

PARAMETER		TEST CONDITIONS	DEVICE GRADE	V_{CC}	MIN	TYP	MAX	UNIT
f_{VLO}	VLO frequency	Measured at MCLK	T	3.0 V		10		kHz
df_{VLO}/d_T	VLO frequency temperature drift	Measured at MCLK (1)	T	3.0 V		0.5		%/°C
df_{VLO}/dV_{CC}	VLO frequency supply voltage drift	Measured at MCLK (2)	T	1.8 V to 3.6 V		4		%/V
$f_{VLO,DC}$	Duty cycle	Measured at MCLK	T	3.0 V		50%		

(1) Calculated using the box method: (MAX(–40°C to 105°C) – MIN(–40°C to 105°C)) / MIN(–40°C to 105°C) / (105°C – (–40°C))
(2) Calculated using the box method: (MAX(1.8 V to 3.6 V) – MIN(1.8 V to 3.6 V)) / MIN(1.8 V to 3.6 V) / (3.6 V – 1.8 V)

注: The VLO clock frequency is reduced by 15% (typical) when the device switches from active mode to LPM3 or LPM4, because the reference changes. This lower frequency is not a violation of the VLO specifications (see 表 5-8).

Copyright © 2018–2019, Texas Instruments Incorporated

表 5-9 lists the characteristics of the MODOSC.

表 5-9. Module Oscillator (MODOSC)

over recommended ranges of supply voltage and operating free-air temperature (unless otherwise noted)

PARAMETER		DEVICE GRADE	V_{CC}	MIN	TYP	MAX	UNIT
f_{MODOSC}	MODOSC frequency	T	3.0 V	3.0	3.8	4.6	MHz
f_{MODOSC}/dT	MODOSC frequency temperature drift (1)	T	3.0 V		0.102		%/℃
f_{MODOSC}/dV_{CC}	MODOSC frequency supply voltage drift	T	1.8 V to 3.6 V		1.17		%/V
$f_{MODOSC,DC}$	Duty cycle	T	3.0 V	40%	50%	60%	

(1) Calculated using the box method: (MAX(–40°C to 105°C) – MIN(–40°C to 105°C)) / MIN(–40°C to 105°C) / (105°C – (–40°C))

5.12.4 Internal Shared Reference

表 5-10 lists the characteristics of the internal shared reference.

表 5-10. Internal Shared Reference

over recommended ranges of supply voltage and operating free-air temperature (unless otherwise noted)

PARAMETER		TEST CONDITIONS	DEVICE GRADE	V_{CC}	MIN	TYP	MAX	UNIT
V_{SENSOR}	Temperature sensor voltage	T_J = 30℃	T	2.0 V, 3.0 V		788		mV
TC_{SENSOR}	Temperature sensor coefficient	T_J = 30℃	T			2.32		mV/°C
$V_{eCOMP, LP}$	Low-power threshold for eCOMP	T_J = 30℃	T	2.0 V, 3.0 V		1.20		V
$V_{REF+, Output}$	Positive output reference at VREF+ pin	T_J = 30℃	T	2.0 V, 3.0 V		1.20		V
The following parameters are for the 1.5-V, 2.0-V, and 2.5-V internal reference only and cannot be output to the VREF+ pin.								
$V_{REF+, built-in}$	Positive built-in reference voltage as internal reference	REFVSEL = {2} for 2.5 V, INTREFEN = 1	T	3.0 V		2.5	±1.5%	V
		REFVSEL = {1} for 2.0 V, INTREFEN = 1	T	2.5 V		2.0	±1.5%	
		REFVSEL = {0} for 1.5 V, INTREFEN = 1	T	1.8 V		1.5	±1.8%	
Noise	RMS noise at VREF (1)	From 0.1 Hz to 10 Hz, REFVSEL = {0}	T			30	130	µV
$V_{OS_BUF_INT}$	VREF ADC BUF_INT buffer offset (2)	T_A = 25 °C , ADC ON, REFVSEL = {0}, INTREFEN = 1, EXTREFEN=0	T		–16		+16	mV
$V_{OS_BUF_EXT}$	VREF ADC BUF_EXT buffer offset (3)	T_A = 25 °C, REFVSEL = {0} , EXTREFEN = 1, INTREFEN = 1 or ADC ON	T		–16		+16	mV
$DV_{CC(min)}$	DVCC minimum voltage, Positive built-in reference active	REFVSEL = {0} for 1.5 V	T		1.8			V
		REFVSEL = {1} for 2.0 V	T		2.2			
		REFVSEL = {2} for 2.5 V	T		2.7			
I_{REF+}	Operating supply current into DVCC terminal (4)	INTREFEN = 1	T	3 V		19	26	µA

(1) Internal reference noise affects ADC performance when ADC uses internal reference.
(2) Buffer offset affects ADC gain error and thus total unadjusted error.
(3) Buffer offset affects ADC gain error and thus total unadjusted error.
(4) The internal reference current is supplied through the DVCC terminal.

Copyright © 2018–2019, Texas Instruments Incorporated

表 5-10. Internal Shared Reference (continued)

over recommended ranges of supply voltage and operating free-air temperature (unless otherwise noted)

PARAMETER		TEST CONDITIONS	DEVICE GRADE	V_{CC}	MIN	TYP	MAX	UNIT
$I_{REF+_ADC_BUF}$	Operating supply current into DVCC terminal(4)	ADC ON, EXTREFEN = 0, REFVSEL = {0, 1, 2}	T	3 V		247	400	µA
$I_{O(VREF+)}$	VREF maximum load current, VREF+ terminal	REFVSEL = {0, 1, 2}, DV_{CC} = $DV_{CC(min)}$ for each reference level, INTREFEN = EXTREFEN = 1	T	3 V	–1000		+10	µA
ΔVout/ ΔIo(VREF+)	Load-current regulation, VREF+ terminal	REFVSEL = {0, 1, 2}, $I_{O(VREF+)}$ = +10 µA or –1000 µA, DV_{CC} = $DV_{CC(min)}$ for each reference level, INTREFEN = EXTREFEN = 1	T	3 V			1500	µV/mA
$C_{VREF+/-}$	Capacitance at VREF+ and VREF- terminals	INTREFEN = EXTREFEN = 1	T	3 V	0		100	pF
TC_{REF+}	Temperature coefficient of built-in reference	REFVSEL = {0, 1, 2}, INTREFEN = EXTREFEN = 1, T_A = –40°C to 105°C(5)	T	3 V		24	50	ppm/K
PSRR_DC	Power supply rejection ratio (DC)	DV_{CC} = $DV_{CC\ (min)}$ to $DV_{CC(max)}$, T_A = 25°C, REFVSEL = {0, 1, 2}, INTREFEN = EXTREFEN = 1	T	3 V		100	400	µV/V
PSRR_AC	Power supply rejection ratio (ac)	dDV_{CC}= 0.1 V at 1 kHz	T	3 V		3.0		mV/V
t_{SETTLE}	Settling time of reference voltage(6)	DV_{CC} = $DV_{CC(min)}$ to $DV_{CC(max)}$, REFVSEL = {0, 1, 2}, INTREFEN = 0 → 1	T	3 V		75	100	µs

(5) Calculated using the box method: (MAX(–40°C to 105°C) – MIN(–40°C to 105°C)) / MIN(–40°C to 105°C) / (105°C – (–40°C))
(6) The condition is that the error in a conversion started after t_{REFON} is less than ±0.5 LSB.

Copyright © 2018–2019, Texas Instruments Incorporated

5.12.5 General-Purpose I/Os

表 5-11 lists the characteristics of the digital inputs.

表 5-11. Digital Inputs

over recommended ranges of supply voltage and operating free-air temperature (unless otherwise noted)

PARAMETER		TEST CONDITIONS	DEVICE GRADE	V_{CC}	MIN	TYP	MAX	UNIT
V_{IT+}	Positive-going input threshold voltage		T	2.0 V	0.90		1.50	V
			T	3.0 V	1.35		2.25	
V_{IT-}	Negative-going input threshold voltage		T	2.0 V	0.50		1.10	V
			T	3.0 V	0.75		1.65	
V_{hys}	Input voltage hysteresis ($V_{IT+} – V_{IT-}$)		T	2.0 V	0.3		0.8	V
			T	3.0 V	0.4		1.2	
R_{Pull}	Pullup or pulldown resistor	For pullup: $V_{IN} = V_{SS}$, For pulldown: $V_{IN} = V_{CC}$	T		20	35	50	kΩ
$C_{I,dig}$	Input capacitance, digital only port pins	$V_{IN} = V_{SS}$ or V_{CC}	T			3		pF
$C_{I,ana}$	Input capacitance, port pins with shared analog functions	$V_{IN} = V_{SS}$ or V_{CC}	T			5		pF
$I_{lkg(Px.y)}$	High-impedance leakage current (1) (2)		T	2.0 V, 3.0 V	–30		+30	nA
$t_{(int)}$	External interrupt timing (external trigger pulse duration to set interrupt flag) (3)	Ports with interrupt capability (see block diagram and terminal function descriptions)	T	2.0 V, 3.0 V	50			ns

(1) The leakage current is measured with V_{SS} or V_{CC} applied to the corresponding pins, unless otherwise noted.
(2) The leakage of the digital port pins is measured individually. The port pin is selected for input and the pullup or pulldown resistor is disabled.
(3) An external signal sets the interrupt flag every time the minimum interrupt pulse duration $t_{(int)}$ is met. It can be set by trigger signals shorter than $t_{(int)}$.

表 5-12 lists the characteristics of the digital outputs.

表 5-12. Digital Outputs

over recommended ranges of supply voltage and operating free-air temperature (unless otherwise noted)

PARAMETER		TEST CONDITIONS	DEVICE GRADE	V_{CC}	MIN	TYP	MAX	UNIT
V_{OH}	High-level output voltage	$I_{(OHmax)} = –3$ mA (1)	T	2.0 V	1.4		2.0	V
		$I_{(OHmax)} = –5$ mA (1)	T	3.0 V	2.4		3.0	
V_{OL}	Low-level output voltage	$I_{(OLmax)} = 3$ mA (1)	T	2.0 V	0.0		0.60	V
		$I_{(OLmax)} = 5$ mA (1)	T	3.0 V	0.0		0.60	
f_{Port_CLK}	Clock output frequency	Applicable to all IO ports, $C_L = 20$ pF (2)	T	2.0 V	16			MHz
			T	3.0 V	16			
		IOs multiplexed with MCLK and SMCLK, $C_L = 10$ pF (2)	T	2.0 V	24			
			T	3.0 V	24			
$t_{rise,dig}$	Port output rise time, digital only port pins	$C_L = 20$ pF	T	2.0 V		10		ns
			T	3.0 V		7		
$t_{fall,dig}$	Port output fall time, digital only port pins	$C_L = 20$ pF	T	2.0 V		10		ns
			T	3.0 V		5		

(1) The maximum total current, $I_{(OHmax)}$ and $I_{(OLmax)}$, for all outputs combined should not exceed ±48 mA to hold the maximum voltage drop specified.
(2) The port can output frequencies at least up to the specified limit and might support higher frequencies.

5.12.6 Digital I/O Typical Characteristics

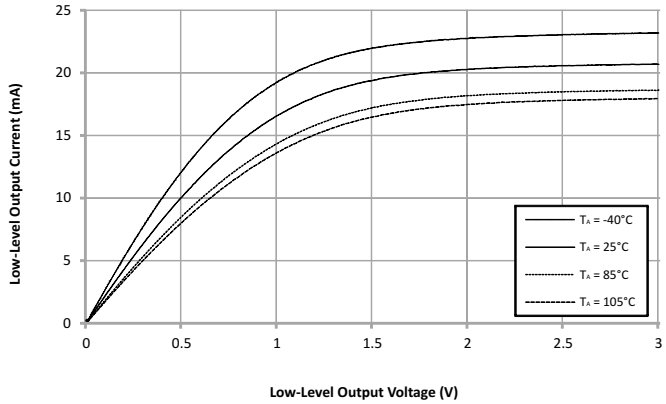

DVCC = 3 V

図 5-7. Typical Low-Level Output Current vs Low-Level Output Voltage

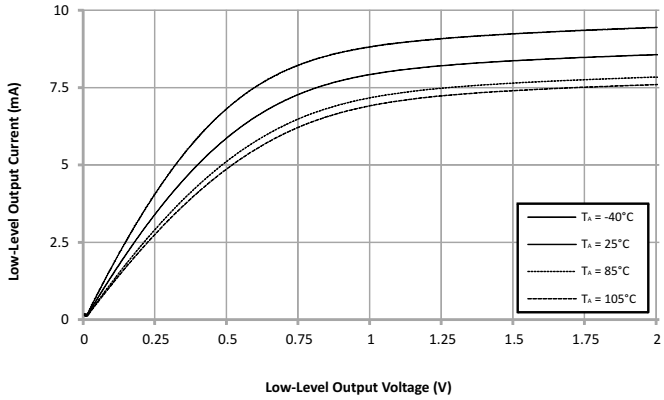

DVCC = 2 V

図 5-8. Typical Low-Level Output Current vs Low-Level Output Voltage

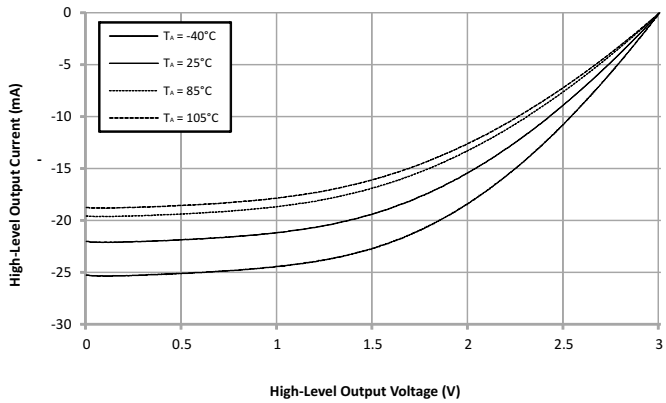

DVCC = 3 V

図 5-9. Typical High-Level Output Current vs High-Level Output Voltage

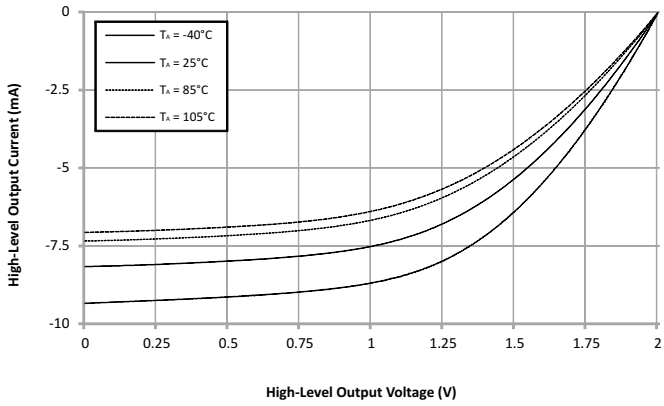

DVCC = 2 V

図 5-10. Typical High-Level Output Current vs High-Level Output Voltage

Copyright © 2018–2019, Texas Instruments Incorporated

5.12.7 Timer_B

表 5-13 lists the frequency characteristics of Timer_B.

表 5-13. Timer_B

over recommended ranges of supply voltage and operating free-air temperature (unless otherwise noted)

PARAMETER		TEST CONDITIONS	DEVICE GRADE	V_{CC}	MIN	TYP	MAX	UNIT
f_{TB}	Timer_B input clock frequency	Internal: SMCLK or ACLK, External: TBCLK, Duty cycle = 50% ±10%	T	2.0 V, 3.0 V			24	MHz
$t_{TB,cap}$	Timer_B capture timing	All capture inputs, minimum pulse duration required for capture	T	2.0 V, 3.0 V	20			ns

5.12.8 eUSCI

表 5-14 lists the supported frequencies of the eUSCI in UART mode.

表 5-14. eUSCI (UART Mode) Clock Frequencies

over recommended ranges of supply voltage and operating free-air temperature (unless otherwise noted)

PARAMETER		TEST CONDITIONS	DEVICE GRADE	V_{CC}	MIN	TYP	MAX	UNIT
f_{eUSCI}	eUSCI input clock frequency	Internal: SMCLK or MODCLK, External: UCLK, Duty cycle = 50% ±10%	T	2.0 V, 3.0 V			24	MHz
f_{BITCLK}	BITCLK clock frequency (equals baud rate in Mbaud)		T	2.0 V, 3.0 V			5	MHz

表 5-15 lists the switching characteristics of the eUSCI in UART mode.

表 5-15. eUSCI (UART Mode) Switching Characteristics

over recommended ranges of supply voltage and operating free-air temperature (unless otherwise noted)

PARAMETER		TEST CONDITIONS	DEVICE GRADE	V_{CC}	MIN	TYP	MAX	UNIT
t_t	UART receive deglitch time (1)	UCGLITx = 0	T	2.0 V, 3.0 V		12		ns
		UCGLITx = 1				40		
		UCGLITx = 2				68		
		UCGLITx = 3				110		

(1) Pulses on the UART receive input (UCxRX) shorter than the UART receive deglitch time are suppressed. To make sure that pulses are correctly recognized their width should exceed the maximum specification of the deglitch time.

表 5-16 lists the supported frequencies of the eUSCI in SPI master mode.

表 5-16. eUSCI (SPI Master Mode) Clock Frequency

over recommended ranges of supply voltage and operating free-air temperature (unless otherwise noted)

PARAMETER		TEST CONDITIONS	DEVICE GRADE	V_{CC}	MIN	TYP	MAX	UNIT
f_{eUSCI}	eUSCI input clock frequency	Internal: SMCLK, Duty cycle = 50% ±10%	T				8	MHz

表 5-17 lists the switching characteristics of the eUSCI in SPI master mode.

表 5-17. eUSCI (SPI Master Mode) Switching Characteristics

over recommended ranges of supply voltage and operating free-air temperature (unless otherwise noted)(1)

PARAMETER		TEST CONDITIONS	DEVICE GRADE	V_{CC}	MIN	TYP	MAX	UNIT
$t_{STE,LEAD}$	STE lead time, STE active to clock	UCSTEM = 1, UCMODEx = 01 or 10	T		1			UCxCLK cycles
$t_{STE,LAG}$	STE lag time, Last clock to STE inactive	UCSTEM = 1, UCMODEx = 01 or 10	T		1			UCxCLK cycles
$t_{SU,MI}$	SOMI input data setup time		T	2.0 V	60			ns
				3.0 V	42			
$t_{HD,MI}$	SOMI input data hold time		T	2.0 V	0			ns
				3.0 V	0			
$t_{VALID,MO}$	SIMO output data valid time(2)	UCLK edge to SIMO valid, C_L = 20 pF	T	2.0 V			20	ns
				3.0 V			20	
$t_{HD,MO}$	SIMO output data hold time(3)	C_L = 20 pF	T	2.0 V	–9.0			ns
				3.0 V	–6.0			

(1) $f_{UCxCLK} = 1/2t_{LO/HI}$ with $t_{LO/HI} = \max(t_{VALID,MO(eUSCI)} + t_{SU,SI(Slave)}, t_{SU,MI(eUSCI)} + t_{VALID,SO(Slave)})$
For the slave parameters $t_{SU,SI(Slave)}$ and $t_{VALID,SO(Slave)}$, see the SPI parameters of the attached slave.
(2) Specifies the time to drive the next valid data to the SIMO output after the output changing UCLK clock edge. See the timing diagrams in 図 5-11 and 図 5-12.
(3) Specifies how long data on the SIMO output is valid after the output changing UCLK clock edge. Negative values indicate that the data on the SIMO output can become invalid before the output changing clock edge observed on UCLK. See the timing diagrams in 図 5-11 and 図 5-12.

Copyright © 2018–2019, Texas Instruments Incorporated

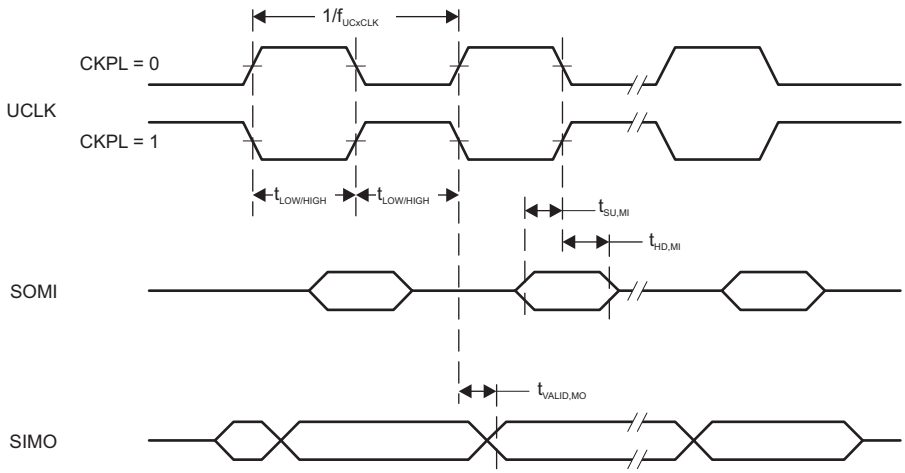

図 5-11. SPI Master Mode, CKPH = 0

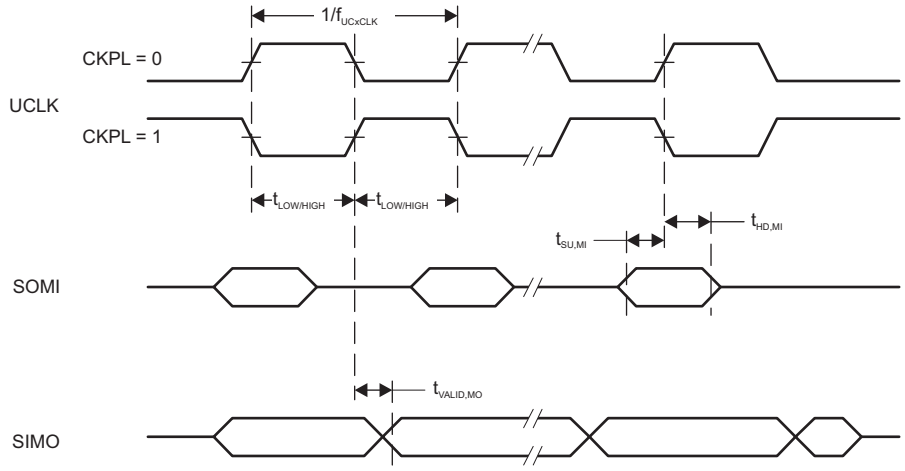

図 5-12. SPI Master Mode, CKPH = 1

表 5-18 lists the switching characteristics of the eUSCI in SPI slave mode.

表 5-18. eUSCI (SPI Slave Mode) Switching Characteristics

over recommended ranges of supply voltage and operating free-air temperature (unless otherwise noted)(1)

PARAMETER		TEST CONDITIONS	DEVICE GRADE	V_{CC}	MIN	TYP	MAX	UNIT
$t_{STE,LEAD}$	STE lead time, STE active to clock		T	2.0 V	55			ns
				3.0 V	45			
$t_{STE,LAG}$	STE lag time, last clock to STE inactive		T	2.0 V	20			ns
				3.0 V	20			
$t_{STE,ACC}$	STE access time, STE active to SOMI data out		T	2.0 V			65	ns
				3.0 V			40	
$t_{STE,DIS}$	STE disable time, STE inactive to SOMI high impedance		T	2.0 V			40	ns
				3.0 V			35	
$t_{SU,SI}$	SIMO input data setup time		T	2.0 V	10			ns
				3.0 V	6			
$t_{HD,SI}$	SIMO input data hold time		T	2.0 V	12			ns
				3.0 V	12			
$t_{VALID,SO}$	SOMI output data valid time(2)	UCLK edge to SOMI valid, C_L = 20 pF	T	2.0 V			69	ns
				3.0 V			42	
$t_{HD,SO}$	SOMI output data hold time (3)	C_L = 20 pF	T	2.0 V	5			ns
				3.0 V	5			

(1) $f_{UCxCLK} = 1/2t_{LO/HI}$ with $t_{LO/HI} \geq \max(t_{VALID,MO(Master)} + t_{SU,SI(eUSCI)}, t_{SU,MI(Master)} + t_{VALID,SO(eUSCI)})$
For the master parameters $t_{SU,MI(Master)}$ and $t_{VALID,MO(Master)}$, see the SPI parameters of the attached master.
(2) Specifies the time to drive the next valid data to the SOMI output after the output changing UCLK clock edge. See the timing diagrams in 図 5-13 and 図 5-14.
(3) Specifies how long data on the SOMI output is valid after the output changing UCLK clock edge. See the timing diagrams in 図 5-13 and 図 5-14.

Copyright © 2018–2019, Texas Instruments Incorporated

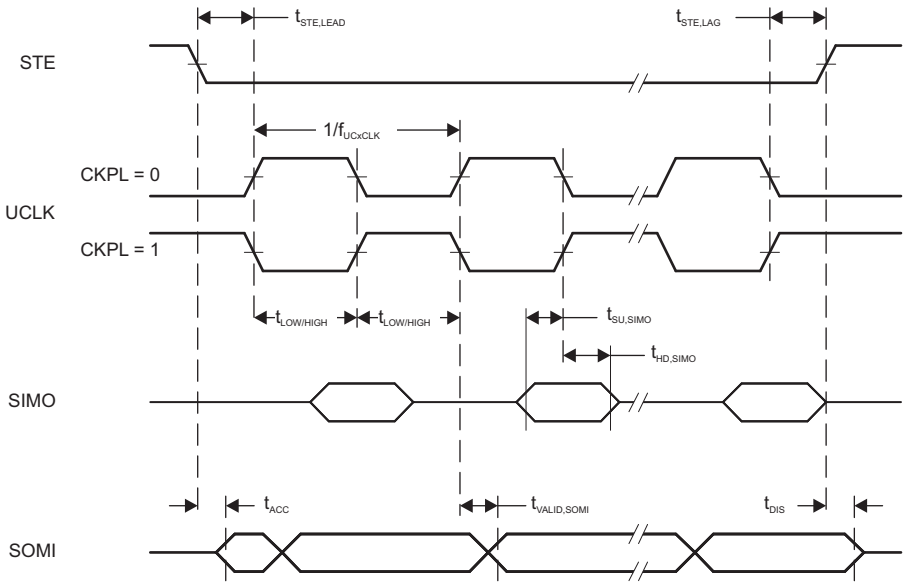

図 5-13. SPI Slave Mode, CKPH = 0

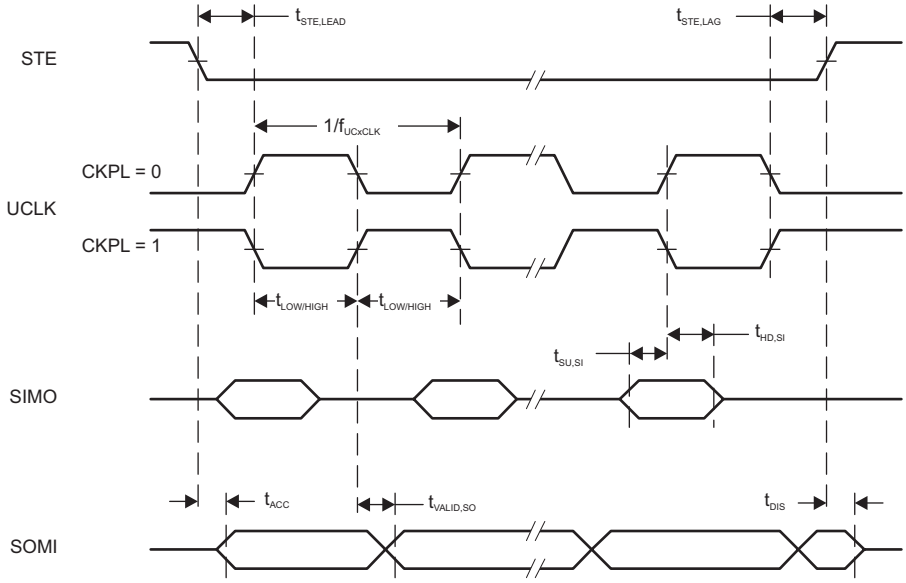

図 5-14. SPI Slave Mode, CKPH = 1

表 5-19 lists the switching characteristics of the eUSCI in I²C mode.

表 5-19. eUSCI (I²C Mode) Switching Characteristics

over recommended ranges of supply voltage and operating free-air temperature (unless otherwise noted) (see 図 5-15)

PARAMETER		TEST CONDITIONS	DEVICE GRADE	V_{CC}	MIN	TYP	MAX	UNIT
f_{eUSCI}	eUSCI input clock frequency	Internal: SMCLK or MODCLK, External: UCLK Duty cycle = 50% ±10%	T	2.0 V, 3.0 V			24	MHz
f_{SCL}	SCL clock frequency		T	2.0 V, 3.0 V	0		400	kHz
$t_{HD,STA}$	Hold time (repeated) START	f_{SCL} = 100 kHz	T	2.0 V, 3.0 V	4.0			µs
		f_{SCL} > 100 kHz			0.6			
$t_{SU,STA}$	Setup time for a repeated START	f_{SCL} = 100 kHz	T	2.0 V, 3.0 V	4.7			µs
		f_{SCL} > 100 kHz			0.6			
$t_{HD,DAT}$	Data hold time		T	2.0 V, 3.0 V	0			ns
$t_{SU,DAT}$	Data setup time		T	2.0 V, 3.0 V	250			ns
$t_{SU,STO}$	Setup time for STOP	f_{SCL} = 100 kHz	T	2.0 V, 3.0 V	4.0			µs
		f_{SCL} > 100 kHz			0.6			
t_{SP}	Pulse duration of spikes suppressed by input filter	UCGLITx = 0	T	2.0 V, 3.0 V	50		600	ns
		UCGLITx = 1			25		300	
		UCGLITx = 2			12.5		150	
		UCGLITx = 3			6.3		75	
$t_{TIMEOUT}$	Clock low time-out	UCCLTOx = 1	T	2.0 V, 3.0 V		36		ms
		UCCLTOx = 2				40		
		UCCLTOx = 3				44		

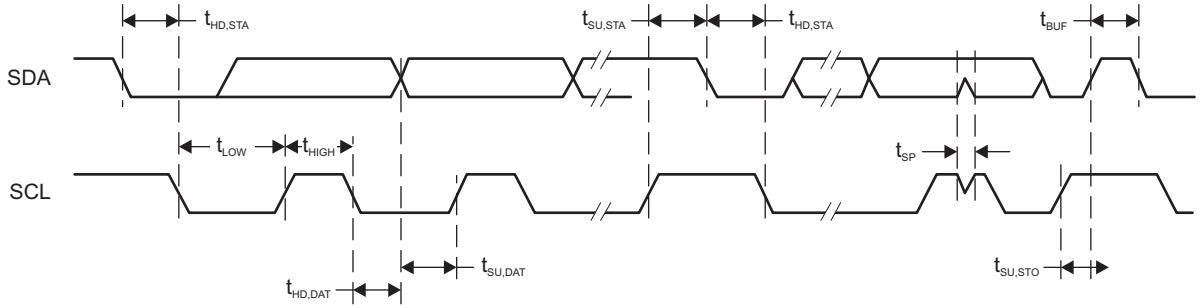

図 5-15. I²C Mode Timing

Copyright © 2018–2019, Texas Instruments Incorporated

5.12.9 ADC

表 5-20 lists the input characteristics of the ADC.

表 5-20. ADC, Power Supply and Input Range Conditions

over operating free-air temperature range (unless otherwise noted)

PARAMETER		TEST CONDITIONS	DEVICE GRADE	V_{CC}	MIN	TYP	MAX	UNIT
DV_{CC}	ADC supply voltage(1)		T		2.0		3.6	V
$V_{(Ax)}$	Analog input voltage range	All ADC pins	T		0		DV_{CC}	V
I_{ADC}	Operating supply current into DVCC terminal, reference current not included, repeat-single-channel mode	f_{ADCCLK} = 5 MHz, ADCON = 1, REFON = 0, SHT0 = 0, SHT1 = 0, ADCDIV = 0, ADCCONSEQx = 10b	T	2.0 V		185		µA
				3.0 V		280		
C_I	Input capacitance	Only one terminal Ax can be selected at one time from the pad to the ADC capacitor array, including wiring and pad	T	2.2 V		4.5	5.5	pF
R_I	Input MUX ON resistance	DV_{CC} = 2 V, 0 V ≤ V_{Ax} ≤ DV_{CC}	T				2	kΩ

(1) This specifies the ADC functional range with 8-bit resolution at 8-bit ENOB. 表 5-22 specifies 10- and 12-bit linearity parameters for better ENOB requirements.

表 5-21 lists the timing parameters of the ADC.

表 5-21. ADC, Timing Parameters

over operating free-air temperature range (unless otherwise noted)

PARAMETER		TEST CONDITIONS	DEVICE GRADE	V_{CC}	MIN	TYP	MAX	UNIT
f_{ADCCLK}	ADC clock frequency	ADC clock, 10-bit mode	T	2.4 V to 3.6 V			6.0	MHz
		ADC clock, 12-bit mode					4.4	
$t_{Settling}$	Turn-on settling time of the ADC	The error in a conversion started after t_{ADCON} is less than ±0.5 LSB, Reference and input signal already settled	T				100	ns
t_{Sample}	Sampling time(1)	R_S = 1000 Ω, R_I = 4000 Ω, C_I = 5.5 pF, $C_{external}$ = 8.0 pF, Approximately 7.62 Tau (t) are required for an error of less than ±0.5 LSB, 10-bit mode(2)	T	2.4 V to 3.6 V	0.52			µs
		R_S = 1000 Ω, R_I = 4000 Ω, C_I = 5.5 pF, $C_{external}$ = 8.0 pF, Approximately 9.01 Tau (t) are required for an error of less than ±0.5 LSB, 12-bit mode(2)	T	2.4 V to 3.6 V	0.61			

(1) This excludes the ADC conversion time. The ADC conversion time is specified as (N + 2) × $1/f_{ADCCLK}$.
(2) $t_{Sample} = \ln(2^{n+1}) \times \tau$, where n = ADC resolution, $\tau = (R_I + R_S) \times C_I$

表 5-22 lists the linearity parameters of the ADC.

表 5-22. ADC, Linearity Parameters

over operating free-air temperature range (unless otherwise noted)

PARAMETER		TEST CONDITIONS	DEVICE GRADE	V_{CC}	MIN	TYP	MAX	UNIT
E_I	Integral linearity error(12-bit mode)	Veref+ reference	T	2.4 V to 3.6 V	–2.5		2.5	LSB
	Integral linearity error (10-bit mode)	Veref+ reference			–2		2	
E_D	Differential linearity error(12-bit mode)	Veref+ reference	T	2.4 V to 3.6 V	–1		1	LSB
	Differential linearity error (10-bit mode)	Veref+ reference			–1		1	
E_O	Offset error(12-bit mode)	Veref+ reference	T	2.4 V to 3.6 V	–1.5		1.5	mV
	Offset error (10-bit mode)	Veref+ reference			–6.0		6.0	
E_G	Gain error (12-bit mode)	Veref+ as reference	T	2.4 V to 3.6 V	–3.0		3.0	LSB
	Gain error (10-bit mode)	Veref+ as reference			–1.5		1.5	
E_T	Total unadjusted error (12-bit mode)	Veref+ as reference	T	2.4 V to 3.6 V	–4.0		4.0	LSB
	Total unadjusted error (10-bit mode)	Veref+ as reference			–2.0		2.0	

Copyright © 2018–2019, Texas Instruments Incorporated

5.12.10 Enhanced Comparator (eCOMP)

表 5-23 lists the characteristics of eCOMP0.

表 5-23. eCOMP0

over recommended ranges of supply voltage and operating free-air temperature (unless otherwise noted)

PARAMETER		TEST CONDITIONS	DEVICE GRADE	MIN	TYP	MAX	UNIT
V_{CC}	Supply voltage		T	2.0		3.6	V
V_{IC}	Common mode input range		T	0		V_{CC}	V
V_{HYS}	DC input hysteresis	CPEN = 1, CPHSEL= 00	T		0		mV
		CPEN = 1, CPHSEL= 01			10		
		CPEN = 1, CPHSEL= 10			20		
		CPEN = 1, CPHSEL= 11			30		
V_{OFFSET}	Input offset voltage	CPEN = 1, CPMSEL = 0	T	–30		+30	mV
		CPEN = 1, CPMSEL = 1		–40		+40	
I_{COMP}	Quiescent current draw from V_{CC}, only Comparator	$V_{IC} = V_{CC}/2$, CPEN = 1, CPMSEL = 0	T		24	35	µA
		$V_{IC} = V_{CC}/2$, CPEN = 1, CPMSEL = 1			1.6	5	
C_{IN}	Input channel capacitance(1)		T		1		pF
R_{IN}	Input channel series resistance	On (switch closed)	T		10	20	kΩ
		Off (switch open)		50			MΩ
t_{PD}	Propagation delay, response time	CPMSEL = 0, CPFLT = 0, Overdrive = 20 mV	T			1	µs
		CPMSEL = 1, CPFLT = 0, Overdrive = 20 mV			3.2		
t_{EN_CP}	Comparator enable time	CPEN = 0→1, CPMSEL = 0, V+ and V- from pads, Overdrive = 20 mV	T		8.5		µs
		CPEN = 0→1, CPMSEL = 1, V+ and V- from pads, Overdrive = 20 mV			1.4		
$t_{EN_CP_DAC}$	Comparator with reference DAC enable time	CPEN = 0→1, CPDACEN = 0→1, CPMSEL = 0, CPDACREFS = 1, CPDACBUF1 = 0F, Overdrive = 20 mV	T		8.5		µs
		CPEN = 0→1, CPDACEN = 0→1, CPMSEL = 1, CPDACREFS = 1, CPDACBUF1 = 0F, Overdrive = 20 mV			101		
t_{FDLY}	Propagation delay with analog filter active	CPMSEL = 0, CPFLTDY = 00, Overdrive = 20 mV, CPFLT = 1	T		0.7		µs
		CPMSEL = 0, CPFLTDY = 01, Overdrive = 20 mV, CPFLT = 1			1.1		
		CPMSEL = 0, CPFLTDY = 10, Overdrive = 20 mV, CPFLT = 1			1.9		
		CPMSEL = 0, CPFLTDY = 11, Overdrive = 20 mV, CPFLT = 1			3.4		
INL	Integral nonlinearity		T	–0.5		0.5	LSB
DNL	Differential nonlinearity		T	–0.5		0.5	LSB

(1) For details on the eCOMP $C_{IN,}$ model , see 図 5-16.

表 5-24 lists the characteristics of eCOMP1.

表 5-24. eCOMP1

over recommended ranges of supply voltage and operating free-air temperature (unless otherwise noted)

PARAMETER		TEST CONDITIONS	DEVICE GRADE	MIN	TYP	MAX	UNIT
VCC	Supply voltage		T	2.0		3.6	V
V_{IC}	Common mode input range		T	0		V_{CC}	V
V_{HYS}	DC input hysteresis	CPEN = 1, CPHSEL= 00	T		0		mV
		CPEN = 1, CPHSEL= 01			10		
		CPEN = 1, CPHSEL= 10			20		
		CPEN = 1, CPHSEL= 11			30		
V_{OFFSET}	Input offset voltage	CPEN = 1, CPMSEL = 0	T	–30		+30	mV
		CPEN = 1, CPMSEL = 1		–40		+40	
I_{COMP}	Quiescent current draw from V_{CC}, only Comparator	$V_{IC} = V_{CC}/2$, CPEN = 1, CPMSEL = 0	T		162	209	µA
		$V_{IC} = V_{CC}/2$, CPEN = 1, CPMSEL = 1			20	30	
C_{IN}	Input channel capacitance(1)		T		1		pF
R_{IN}	Input channel series resistance	On (switch closed)	T		1	5	kΩ
		Off (switch open)		50			MΩ
t_{PD}	Propagation delay, response time	CPMSEL = 0, CPFLT = 0, Overdrive = 20 mV, DVCC = 3.0 V	T			0.1	µs
		CPMSEL = 1, CPFLT = 0, Overdrive = 20 mV			0.32		
t_{EN_CP}	Comparator enable time	CPEN = 0→1, CPMSEL = 0, V+ and V- from pads, Overdrive = 20 mV	T		8.5		µs
		CPEN = 0→1, CPMSEL = 1, V+ and V- from pads, Overdrive = 20 mV			4.8		
$t_{EN_CP_DAC}$	Comparator with reference DAC enable time	CPEN = 0→1, CPDACEN = 0→1, CPMSEL = 0, CPDACREFS = 1, CPDACBUF1 = 0F, Overdrive = 20 mV	T		8.5		µs
		CPEN = 0→1, CPDACEN = 0→1, CPMSEL = 1, CPDACREFS = 1, CPDACBUF1 = 0F, Overdrive = 20 mV			101		
t_{FDLY}	Propagation delay with analog filter active	CPMSEL = 0, CPFLTDY = 00, Overdrive = 20 mV, CPFLT = 1	T		150		ns
		CPMSEL = 0, CPFLTDY = 01, Overdrive = 20 mV, CPFLT = 1			350		
		CPMSEL = 0, CPFLTDY = 10, Overdrive = 20 mV, CPFLT = 1			1000		
		CPMSEL = 0, CPFLTDY = 11, Overdrive = 20 mV, CPFLT = 1			1900		
INL	Integral nonlinearity		T	–0.5		0.5	LSB
DNL	Differential nonlinearity		T	–0.5		0.5	LSB

(1) For details on the eCOMP $C_{IN,}$ model, see 図 5-16.

Copyright © 2018–2019, Texas Instruments Incorporated

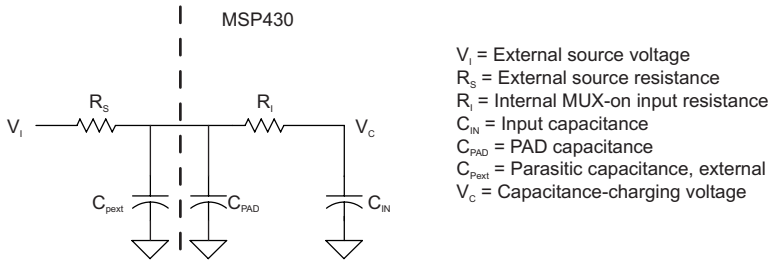

図 5-16. eCOMP Input Circuit

5.12.11 Smart Analog Combo (SAC) (MSP430FR235x Devices Only)

表 5-25 lists the characteristics of the SAC OA.

表 5-25. SAC, OA

over recommended ranges of supply voltage and operating free-air temperature (unless otherwise noted)

PARAMETER		TEST CONDITIONS	DEVICE GRADE	MIN	TYP	MAX	UNIT
V_{CC}	Supply voltage		T	2.0		3.6	V
V_{OS}	Input offset voltage		T	–5		5	mV
dV_{OS}/dT	Offset drift	OAPM = 0 (1)	T		3		µV/℃
		OAPM = 1 (1)			5		
I_B	Input bias current		T		50		pA
V_{CM}	Input voltage range		T	–0.1		V_{CC} + 0.1	V
I_{IDD}	Quiescent current	OAPM = 0	T		350		µA
		OAPM = 1			120		
E_{NI}	Input noise voltage	f = 0.1 Hz to 10 Hz, Vin = V_{CC}/2, OAPM = 0	T		40		µV
	Input noise voltage density	f = 1 kHz, Vin = V_{CC}/2, OAPM = 0			64		nV/√Hz
		f = 10 kHz, Vin = V_{CC}/2, OAPM = 0			28		
CMRR	Common-mode rejection ratio	OAPM = 0	T		70		dB
		OAPM = 1			80		
PSRR	Power supply rejection ratio	OAPM = 0	T		70		dB
		OAPM = 1			80		
GBW	Gain-bandwidth	OAPM = 0	T		2.8		MHz
		OAPM = 1			1.0		
A_{OL}	Open-loop voltage gain	OAPM = 0	T		100		dB
		OAPM = 1			100		
φ_M	Phase margin	C_L = 50 pF , R_L = 2 kΩ	T		65		deg
	Positive slew rate	C_L = 50 pF, OAPM = 0, step = 1	T		3		V/µs
		C_L = 50 pF, OAPM = 1, step = 1			1		
C_{in}	Input capacitance	Common mode	T		3		pF
V_O	Voltage output swing from supply rails	R_L = 10 kΩ	T		40	100	mV
t_{ST}	OA settling time	To 0.1% final value, G = +1, 1-V setup C_L = 50 pF, OAPM = 0	T		1		µs
		To 0.1% final value, G = +1, 1-V setup C_L = 50 pF, OAPM = 1			4.5		
THD	Total harmonic distortion	All gains	T		–60		dB

(1) Calculated using the box method: (MAX(–40°C to 105°C) – MIN(–40°C to 105°C)) / MIN(–40°C to 105°C) / (105°C – (–40°C))

Copyright © 2018–2019, Texas Instruments Incorporated

表 5-25. SAC, OA (continued)

over recommended ranges of supply voltage and operating free-air temperature (unless otherwise noted)

PARAMETER		TEST CONDITIONS	DEVICE GRADE	MIN	TYP	MAX	UNIT
$G_{close\ loop}$	PGA closed-loop gain	Gain = 1, inverting mode, follower mode	T	0.99	1	1.01	
		Gain = 2, noninverting mode	T	1.98	2	2.02	
		Gain = 2, inverting mode	T	1.98	2	2.02	
		Gain = 3, noninverting mode	T	2.97	3	3.03	
		Gain = 4, inverting mode	T	3.96	4	4.04	
		Gain = 5, noninverting mode	T	4.95	5	5.05	
		Gain = 8, inverting mode	T	7.92	8	8.08	
		Gain = 9, noninverting mode	T	8.91	9	9.09	
		Gain = 16, inverting mode	T	15.84	16	16.16	
		Gain = 17, noninverting mode	T	16.83	17	17.17	
		Gain = 25, inverting mode	T	24.75	25	25.25	
		Gain = 26, noninverting mode	T	25.74	26	26.26	
		Gain = 32, inverting mode	T	31.68	32	32.32	
		Gain = 33, noninverting mode	T	32.67	33	33.33	

表 5-26 lists the characteristics of the SAC DAC.

表 5-26. SAC, DAC

over recommended ranges of supply voltage and operating free-air temperature (unless otherwise noted)

PARAMETER		TEST CONDITIONS		DEVICE GRADE	MIN	TYP	MAX	UNIT
V_{CC}	Supply voltage			T	2.4		3.6	V
I_{IDDR}	Quiescent current of resistor ladder into V_{REF_INT}			T		5		µA
I_{IOAD}	OA + DAC output load current	Low-power mode		T		0.2		mA
		High-power mode				1		
$t_{ST(FS)}$	OA + DAC settling time, full scale	DACDAT = 0x80h→0xF7Fh→0x80h	OAPM = 1	T			477	µs
			OAPM = 0				160	
$t_{ST(C-C)}$	OA + DAC settling time, code to code	DACDAT = 0x3F8h→408h→0x3F8h or DACDAT = 0xBF8h→C08h→0xBF8h	OAPM = 1	T		2	10	µs
			OAPM = 0			2	5	
INL	OA + DAC integral nonlinearity	DACSREF = DVCC, DVCC = 3.0 V		T	–4		4	LSB
DNL	OA + DAC differential nonlinearity	DACSREF = DVCC, DVCC = 3.0 V		T	–1		1	LSB
V_{OUT}	Output voltage range	No load, DACSREF = DVCC, DACDAT = 0		T	0		0.005	V
		R_{LOAD} = 3 kΩ , DACSREF = DVCC, DACDAT = 0			0		0.1	
		R_{LOAD} = 3 kΩ , DACSREF = DVCC, DACDAT = 0FFFh			DVCC – 0.1		DVCC	

5.12.12 FRAM

表 5-27 lists the characteristics of the FRAM.

表 5-27. FRAM

over recommended ranges of supply voltage and operating free-air temperature (unless otherwise noted)

PARAMETER		TEST CONDITIONS	DEVICE GRADE	MIN	TYP	MAX	UNIT
	Read and write endurance		T	10^{15}			cycles
$t_{Retention}$	Data retention duration	T_J = 25°C	T	100			years
		T_J = 70°C	T	40			
		T_J = 115°C	T	10			
I_{WRITE}	Current to write into FRAM		T	I_{READ} (1)	I_{READ} (1)	I_{READ} (1)	nA
I_{ERASE}	Erase current		T	N/A (2)	N/A (2)	N/A (2)	nA
t_{WRITE}	Write time		T	t_{READ} (3)	t_{READ} (3)	t_{READ} (3)	ns
T_{READ}	Read time	NWAITSx = 0	T	$1/f_{SYSTEM}$ (4)	$1/f_{SYSTEM}$ (4)	$1/f_{SYSTEM}$ (4)	ns
		NWAITSx = 1	T	$2/f_{SYSTEM}$ (4)	$2/f_{SYSTEM}$ (4)	$2/f_{SYSTEM}$ (4)	
		NWAITSx = 2	T	$3/f_{SYSTEM}$ (4)	$3/f_{SYSTEM}$ (4)	$3/f_{SYSTEM}$ (4)	

(1) Writing to FRAM does not require a setup sequence or additional power when compared to reading from FRAM. The FRAM read current I_{READ} is included in the active mode current consumption $I_{AM, FRAM}$ parameters.
(2) FRAM does not require a special erase sequence.
(3) Writing into FRAM is as fast as reading.
(4) The maximum read (and write) speed is specified by f_{SYSTEM} using the appropriate wait state settings (NWAITSx).

Copyright © 2018–2019, Texas Instruments Incorporated

5.12.13 Emulation and Debug

表 5-28 lists the characteristics of the SBW interface.

表 5-28. JTAG, Spy-Bi-Wire Interface

over recommended ranges of supply voltage and operating free-air temperature (unless otherwise noted) (see 図 5-17)

PARAMETER		DEVICE GRADE	V_{CC}	MIN	TYP	MAX	UNIT
f_{SBW}	Spy-Bi-Wire input frequency	T	2.0 V, 3.0 V	0		8	MHz
$t_{SBW,Low}$	Spy-Bi-Wire low clock pulse duration	T	2.0 V, 3.0 V	0.028		15	µs
$t_{SU,SBWTDIO}$	SBWTDIO setup time (before falling edge of SBWTCK in TMS and TDI slot Spy-Bi-Wire)	T	2.0 V, 3.0 V	4			ns
$t_{HD,SBWTDIO}$	SBWTDIO hold time (after rising edge of SBWTCK in TMS and TDI slot Spy-Bi-Wire)	T	2.0 V, 3.0 V	19			ns
$t_{Valid,SBWTDIO}$	SBWTDIO data valid time (after falling edge of SBWTCK in TDO slot Spy-Bi-Wire)	T	2.0 V, 3.0 V			31	ns
$t_{SBW,\ En}$	Spy-Bi-Wire enable time (TEST high to acceptance of first clock edge) (1)	T	2.0 V, 3.0 V			110	µs
$t_{SBW,Ret}$	Spy-Bi-Wire return to normal operation time (2)	T	2.0 V, 3.0 V	15		100	µs
$R_{internal}$	Internal pulldown resistance on TEST	T	2.0 V, 3.0 V	20	35	50	kΩ

(1) Tools that access the Spy-Bi-Wire interface must wait for the $t_{SBW,En}$ time after pulling the TEST/SBWTCK pin high before applying the first SBWTCK clock edge.
(2) Maximum $t_{SBW,Rst}$ time after pulling or releasing the TEST/SBWTCK pin low, the Spy-Bi-Wire pins revert from their Spy-Bi-Wire function to their application function. This time applies only if the Spy-Bi-Wire mode was selected.

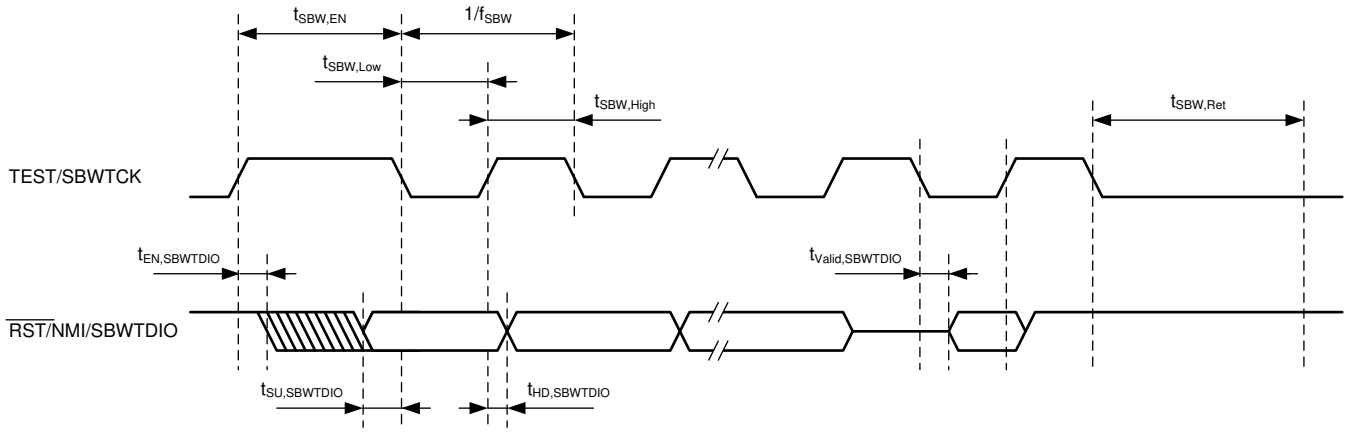

図 5-17. JTAG Spy-Bi-Wire Timing

表 5-29 lists the characteristics of the 4-wire JTAG interface.

表 5-29. JTAG, 4-Wire Interface

over recommended ranges of supply voltage and operating free-air temperature (unless otherwise noted) (see 図 5-18)

PARAMETER		DEVICE GRADE	V_{CC}	MIN	TYP	MAX	UNIT
f_{TCK}	TCK input frequency (1)	I, T	2.0 V, 3.0 V	0		10	MHz
$t_{TCK,Low}$	Spy-Bi-Wire low clock pulse duration	I, T	2.0 V, 3.0 V	15			ns
$t_{TCK,high}$	Spy-Bi-Wire high clock pulse duration	I, T	2.0 V, 3.0 V	15			ns
$t_{SU,TMS}$	TMS setup time (before rising edge of TCK)	I, T	2.0 V, 3.0 V	11			ns
$t_{HD,TMS}$	TMS hold time (after rising edge of TCK)	I, T	2.0 V, 3.0 V	3			ns
$t_{SU,TDI}$	TDI setup time (before rising edge of TCK)	I, T	2.0 V, 3.0 V	13			ns
$t_{HD,TDI}$	TDI hold time (after rising edge of TCK)	I, T	2.0 V, 3.0 V	5			ns
$t_{z\text{-}Valid,TDO}$	TDO high impedance to valid output time (after falling edge of TCK)	I, T	2.0 V, 3.0 V			26	ns
$t_{Valid,TDO}$	TDO to new valid output time (after falling edge of TCK)	I, T	2.0 V, 3.0 V			26	ns
$t_{Valid\text{-}Z,TDO}$	TDO valid to high impedance output time (after falling edge of TCK)	I, T	2.0 V, 3.0 V			26	ns
$t_{JTAG,Ret}$	Spy-Bi-Wire return to normal operation time	I, T	2.0 V, 3.0 V	15		100	µs
$R_{internal}$	Internal pulldown resistance on TEST	I, T	2.0 V, 3.0 V	20	35	50	kΩ

(1) Tools that access the Spy-Bi-Wire interface must wait for the $t_{SBW,En}$ time after pulling the TEST/SBWTCK pin high before applying the first SBWTCK clock edge.

Copyright © 2018–2019, Texas Instruments Incorporated

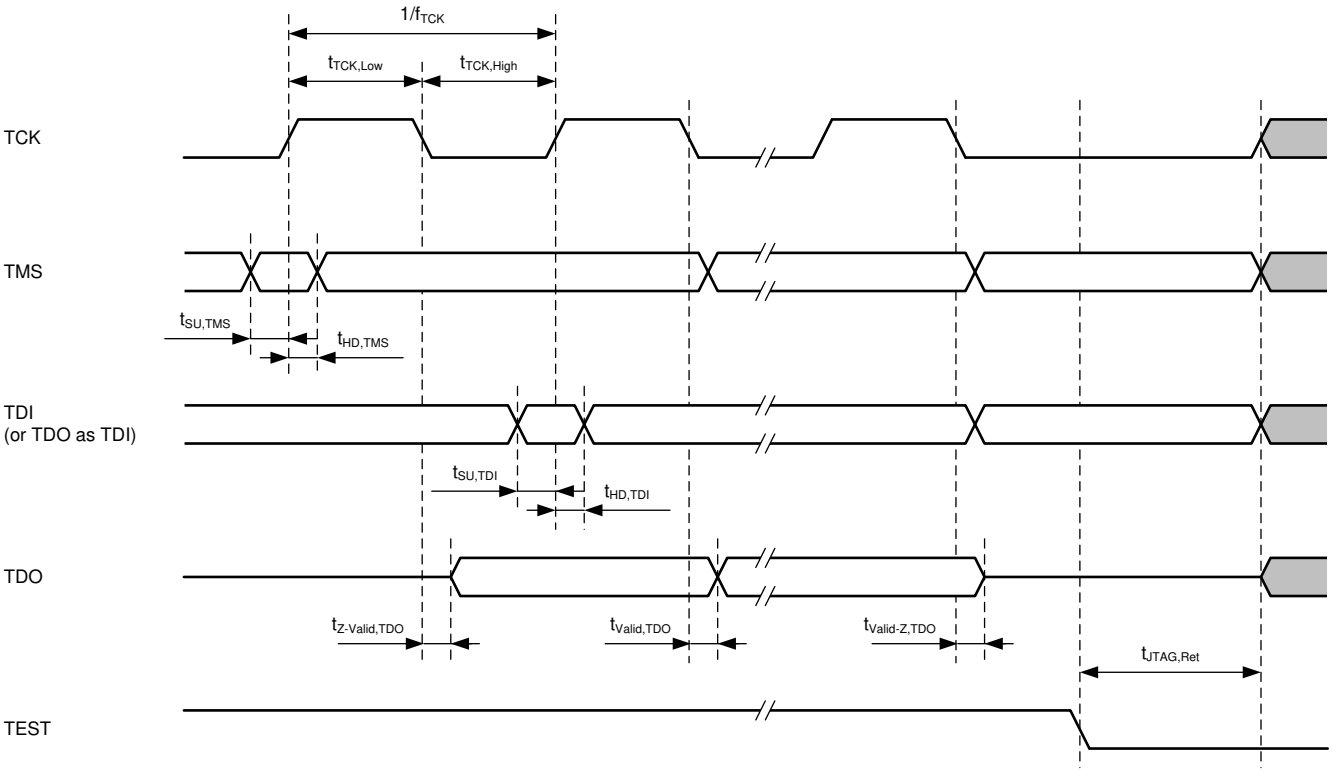

図 5-18. JTAG 4-Wire Timing

6 Detailed Description

6.1 CPU

The MSP430 CPU has a 16-bit RISC architecture that is highly transparent to the application. All operations, other than program-flow instructions, are performed as register operations in conjunction with seven addressing modes for source operand and four addressing modes for destination operand.

The CPU is integrated with 16 registers that provide reduced instruction execution time. The register-to-register operation execution time is one cycle of the CPU clock.

Four of the registers, R0 to R3, are dedicated as program counter (PC), stack pointer (SP), status register (SR), and constant generator (CG), respectively. The remaining registers are general-purpose registers.

Peripherals are connected to the CPU using data, address, and control buses, and can be handled with all instructions.

6.2 Operating Modes

The MCUs have one active mode and several software-selectable low-power modes of operation. An interrupt event can wake the device from a low-power mode (LPM0, LPM3, or LPM4), service the request, and return to the low-power mode on return from the interrupt program. Low-power modes LPM3.5 and LPM4.5 disable the core supply to minimize power consumption.

表 6-1. Operating Modes

MODE		AM	LPM0	LPM3	LPM4	LPM3.5	LPM4.5
		ACTIVE MODE	CPU OFF	STANDBY	OFF	ONLY RTC COUNTER	SHUTDOWN
Maximum system clock		24 MHz	24 MHz	40 kHz	0	40 kHz	0
Power consumption at 25°C, 3 V		142 µA/MHz	40 µA/MHz	1.43 µA with RTC counter only in LFXT	0.82 µA without SVS	620 nA with RTC counter only in LFXT	42 nA without SVS
Wake-up time		N/A	Instant	10 µs	10 µs	350 µs	350 µs
Wake-up events		N/A	All	All	I/O	RTC counter, I/O	I/O
Power	Regulator	Full regulation	Full regulation	Partial power down	Partial power down	Partial power down	Power down
	SVS	On	On	Optional	Optional	Optional	Optional
	Brownout	On	On	On	On	On	On
Clock(1)	MCLK	Active	Off	Off	Off	Off	Off
	SMCLK	Optional	Active	Off	Off	Off	Off
	FLL	Optional	Optional	Off	Off	Off	Off
	DCO	Optional	Optional	Off	Off	Off	Off
	MODCLK	Optional	Optional	Off	Off	Off	Off
	REFO	Optional	Optional	Optional	Off	Off	Off
	ACLK	Optional	Optional	Active	Off	Off	Off
	XT1HFCLK(2)	Optional	Optional	Off	Off	Off	Off
	XT1LFCLK	Optional	Optional	Optional	Off	Optional	Off
	VLOCLK	Optional	Optional	Optional	Off	Optional	Off
Core	CPU	On	Off	Off	Off	Off	Off
	FRAM	On	On	Off	Off	Off	Off
	RAM	On	On	On	On	Off	Off
	Backup Memory(3)	On	On	On	On	On	Off

(1) The status shown for LPM4 applies to internal clocks only.
(2) HFXT must be disabled before entering into LPM3, LPM4, or LPMx.5 mode.
(3) Backup memory contains one 32-byte register in the peripheral memory space. See 表 6-33 and 表 6-54 for its memory allocation.

Copyright © 2018–2019, Texas Instruments Incorporated

表 6-1. Operating Modes (continued)

MODE		AM	LPM0	LPM3	LPM4	LPM3.5	LPM4.5
		ACTIVE MODE	CPU OFF	STANDBY	OFF	ONLY RTC COUNTER	SHUTDOWN
Peripherals	Timer0_B3	Optional	Optional	Optional	Off	Off	Off
	Timer1_B3	Optional	Optional	Optional	Off	Off	Off
	Timer2_B3	Optional	Optional	Optional	Off	Off	Off
	Timer3_B7	Optional	Optional	Optional	Off	Off	Off
	WDT	Optional	Optional	Optional	Off	Off	Off
	eUSCI_A0	Optional	Optional	Optional	Off	Off	Off
	eUSCI_A1	Optional	Optional	Optional	Off	Off	Off
	eUSCI_B0	Optional	Optional	Optional	Off	Off	Off
	eUSCI_B1	Optional	Optional	Optional	Off	Off	Off
	CRC	Optional	Optional	Off	Off	Off	Off
	ICC	Optional	Optional	Off	Off	Off	Off
	MPY32	Optional	Optional	Off	Off	Off	Off
	ADC	Optional	Optional	Optional	Off	Off	Off
	eCOMP0	Optional	Optional	Optional	Optional	Off	Off
	eCOMP1	Optional	Optional	Optional	Optional	Off	Off
	SAC0 (4)	Optional	Optional	Optional	Optional	Off	Off
	SAC1 (4)	Optional	Optional	Optional	Optional	Off	Off
	SAC2 (4)	Optional	Optional	Optional	Optional	Off	Off
	SAC3 (4)	Optional	Optional	Optional	Optional	Off	Off
	RTC Counter	Optional	Optional	Optional	Optional	Optional	Off
I/O	General digital input/output	On	Optional	State held	State held	State held	State held

(4) MSP430FR235x devices only

注: XT1CLK and VLOCLK can be active during LPM4 if requested by low-frequency peripherals.

6.3 Interrupt Vector Addresses

The interrupt vectors and the power-up start address are in the address range 0FFFFh to 0FF80h (see 表 6-2). The vector contains the 16-bit address of the appropriate interrupt-handler instruction sequence.

表 6-2. Interrupt Sources, Flags, and Vectors

INTERRUPT SOURCE	INTERRUPT FLAG	SYSTEM INTERRUPT	WORD ADDRESS	PRIORITY
System Reset Power up, brownout, supply supervisor External reset $\overline{\text{RST}}$ Watchdog time-out, key violation FRAM uncorrectable bit error detection Software POR, BOR FLL unlock error	SVSHIFG PMMRSTIFG WDTIFG PMMPORIFG, PMMBORIFG SYSRSTIV FLLULPUC	Reset	FFFEh	63, Highest
System NMI Vacant memory access JTAG mailbox FRAM access time error FRAM bit-error detection	VMAIFG JMBINIFG, JMBOUTIFG CBDIFG, UBDIFG	Non-Maskable	FFFCh	62
User NMI External NMI Oscillator fault	NMIIFG OFIFG	Non-Maskable	FFFAh	61
Timer0_B3	TB0CCR0 CCIFG0	Maskable	FFF8h	60
Timer0_B3	TB0CCR1 CCIFG1, TB0CCR2 CCIFG2, TB0IFG (TB0IV)	Maskable	FFF6h	59
Timer1_B3	TB1CCR0 CCIFG0	Maskable	FFF4h	58
Timer1_B3	TB1CCR1 CCIFG1, TB1CCR2 CCIFG2, TB1IFG (TB1IV)	Maskable	FFF2h	57
Timer2_B3	TB2CCR0 CCIFG0	Maskable	FFF0h	56
Timer2_B3	TB2CCR1 CCIFG1, TB2CCR2 CCIFG2, TB2IFG (TB2IV)	Maskable	FFEEh	55
Timer3_B7	TB3CCR0 CCIFG0	Maskable	FFECh	54
Timer3_B7	TB3CCR1 CCIFG1, TB3CCR2 CCIFG2, TB3CCR3 CCIFG3, TB3CCR4 CCIFG4, TB3CCR5 CCIFG5, TB3CCR6 CCIFG6, TB3IFG (TB3IV)	Maskable	FFEAh	53
RTC counter	RTCIFG	Maskable	FFE8h	52
Watchdog timer interval mode	WDTIFG	Maskable	FFE6h	51
eUSCI_A0 receive or transmit	UCTXCPTIFG, UCSTTIFG, UCRXIFG, UCTXIFG (UART mode) UCRXIFG, UCTXIFG (SPI mode) (UCA0IV))	Maskable	FFE4h	50
eUSCI_A1 receive or transmit	UCTXCPTIFG, UCSTTIFG, UCRXIFG, UCTXIFG (UART mode) UCRXIFG, UCTXIFG (SPI mode) (UCA0IV))	Maskable	FFE2h	49
eUSCI_B0 receive or transmit	UCB0RXIFG, UCB0TXIFG (SPI mode) UCALIFG, UCNACKIFG, UCSTTIFG, UCSTPIFG, UCRXIFG0, UCTXIFG0, UCRXIFG1, UCTXIFG1, UCRXIFG2, UCTXIFG2, UCRXIFG3, UCTXIFG3, UCCNTIFG, UCBIT9IFG,UCCLTOIFG(I^2C mode) (UCB0IV)	Maskable	FFE0h	48

Copyright © 2018–2019, Texas Instruments Incorporated

表 6-2. Interrupt Sources, Flags, and Vectors (continued)

INTERRUPT SOURCE	INTERRUPT FLAG	SYSTEM INTERRUPT	WORD ADDRESS	PRIORITY
eUSCI_B1 receive or transmit	UCB1RXIFG, UCB1TXIFG (SPI mode) UCALIFG, UCNACKIFG, UCSTTIFG, UCSTPIFG, UCRXIFG0, UCTXIFG0, UCRXIFG1, UCTXIFG1, UCRXIFG2, UCTXIFG2, UCRXIFG3, UCTXIFG3, UCCNTIFG, UCBIT9IFG,UCCLTOIFG(I^2C mode) (UCB0IV)	Maskable	FFDEh	47
ADC	ADCIFG0, ADCINIFG, ADCLOIFG, ADCHIIFG, ADCTOVIFG, ADCOVIFG (ADCIV)	Maskable	FFDCh	46
eCOMP0_eCOMP1	CPIIFG, CPIFG (CP1IV, CP0IV)	Maskable	FFDAh	45
SAC0_SAC2 (1)	SAC2DACSTS DACIFG (SAC2IV) SAC0DACSTS DACIFG, SAC0IV)	Maskable	FFD8h	44
SAC1_SAC3 (1)	SAC3DACSTS DACIFG (SAC3IV) SAC1DACSTS DACIFG, SAC1IV)	Maskable	FFD6h	43
P1	P1IFG.0 to P1IFG.7 (P1IV)	Maskable	FFD4h	42
P2	P2IFG.0 to P2IFG.7 (P2IV)	Maskable	FFD2h	41
P3	P3IFG.0 to P3IFG.7 (P3IV)	Maskable	FFD0h	40
P4	P4IFG.0 to P4IFG.7 (P4IV)	Maskable	FFCEh	39
Reserved	Reserved	Maskable	FFCCh to FF88h	

(1) MSP430FR235x devices only

表 6-3 lists the BSL signature settings. The BSL setting on MSP430FR2355 can be customized by using BSL configuration and I^2C address. See the *MSP430 FRAM Device Bootloader (BSL) User's Guide* for more details.

表 6-3. BSL Signatures

SIGNATURE	WORD ADDRESS
BSL I2C Address (1)	FFA0h
BSL Config	0FF8Ah
BSL Config Signature	0FF88h
BSL Signature2	0FF86h
BSL Signature1	0FF84h
JTAG Signature2	0FF82h
JTAG Signature1	0FF80h

(1) 7-bit address BSL I^2C interface

6.4 Memory Organization

表 6-4 summarizes the memory map of the devices.

表 6-4. Memory Organization

	ACCESS	MSP430FR2355	MSP430FR2353
Memory (FRAM) Main: interrupt vectors and signatures Main: code memory	Read/Write (Optional Write Protect)(1)	32KB FFFFh to FF80h FFFFh to 8000h	16KB FFFFh to FF80h FFFFh to C000h
RAM	Read/Write	4KB 2FFFh to 2000h	2KB 27FFh to 2000h
Information memory (FRAM)	Read/Write(2)	512 bytes 19FFh to 1800h	512 bytes 19FFh to 1800h
Driver library and FFT library (ROM)	Read only	20KB FAC00h to FFBFFh	20KB FAC00h to FFBFFh
Peripherals	Read/Write	4KB 0FFFh to 0020h	4KB 0FFFh to 0020h
Tiny RAM	Read/Write	26 bytes 001Fh to 0006h	26 bytes 001Fh to 0006h
Reserved(3)	Read	6 bytes 0005h to 0000h	6 bytes 0005h to 0000h

(1) The program FRAM can be write protected by setting PFWP bit in SYSCFG0 register. See the SYS chapter in *MSP430FR4xx and MSP430FR2xx Family User's Guide* for more details.
(2) The information FRAM can be write protected by setting DFWP bit in SYSCFG0 register. See the SYS chapter in *MSP430FR4xx and MSP430FR2xx Family User's Guide* for more details.
(3) Reads as D032h at 00h (opcode: BIS.W LPM4, SR), reads as 00F0h at 02h (opcode: BIS.W LPM4, SR), and reads as 3FFFh at 04h (opcode: JMP$)

6.5 Bootloader (BSL)

The BSL enables users to program the FRAM memory or RAM using a UART or I^{2}C serial interface. Access to the device memory through the BSL is protected by an user-defined password. Use of the BSL requires four pins (see 表 6-5 and 表 6-6). BSL entry requires a specific entry sequence on the $\overline{\text{RST}}$/NMI/SBWTDIO and TEST/SBWTCK pins. For complete description of the features of the BSL and its implementation, see *MSP430 FRAM Devices Bootloader (BSL) User's Guide*.

表 6-5. UART BSL Pin Requirements and Functions

DEVICE SIGNAL	BSL FUNCTION
$\overline{\text{RST}}$/NMI/SBWTDIO	Entry sequence signal
TEST/SBWTCK	Entry sequence signal
P1.7	Data transmit
P1.6	Data receive
DVCC	Power supply
DVSS	Ground supply

表 6-6. I^{2}C BSL Pin Requirements and Functions

DEVICE SIGNAL	BSL FUNCTION
$\overline{\text{RST}}$/NMI/SBWTDIO	Entry sequence signal
TEST/SBWTCK	Entry sequence signal
P1.2	Data receive and transmit
P1.3	Clock
DVCC	Power supply

Copyright © 2018–2019, Texas Instruments Incorporated

表 6-6. I²C BSL Pin Requirements and Functions (continued)

DEVICE SIGNAL	BSL FUNCTION
DVSS	Ground supply

6.6 JTAG Standard Interface

The MSP430 family supports the standard JTAG interface which requires four signals for sending and receiving data. The JTAG signals are shared with general-purpose I/O. The TEST/SBWTCK pin is used to enable the JTAG signals. In addition to these signals, the $\overline{\text{RST}}$/NMI/SBWTDIO is required to interface with MSP430 development tools and device programmers. 表 6-7 lists the JTAG pin requirements. For further details on interfacing to development tools and device programmers, see the *MSP430 Hardware Tools User's Guide*.

表 6-7. JTAG Pin Requirements and Function

DEVICE SIGNAL	DIRECTION	JTAG FUNCTION
P1.4/UCA0STE/TCK/A4	IN	JTAG clock input
P1.5/UCA0CLK/TMS/OA1O/A5	IN	JTAG state control
P1.6/UCA0RXD/UCA0SOMI/TB0.1/TDI/TCLK/OA1-/A6	IN	JTAG data input, TCLK input
P1.7/UCA0TXD/UCA0SIMO/TB0.2/TDO/OA1+/A7/VREF+	OUT	JTAG data output
TEST/SBWTCK	IN	Enable JTAG pins
RST/NMI/SBWTDIO	IN	External reset
DVCC	–	Power supply
DVSS	–	Ground supply

6.7 Spy-Bi-Wire Interface (SBW)

The MSP430 family supports the two wire Spy-Bi-Wire interface. Spy-Bi-Wire can be used to interface with MSP430 development tools and device programmers. 表 6-8 shows the Spy-Bi-Wire interface pin requirements. For further details on interfacing to development tools and device programmers, see the *MSP430 Hardware Tools User's Guide*.

表 6-8. Spy-Bi-Wire Pin Requirements and Functions

DEVICE SIGNAL	DIRECTION	SBW FUNCTION
TEST/SBWTCK	IN	Spy-Bi-Wire clock input
RST/NMI/SBWTDIO	IN, OUT	Spy-Bi-Wire data input and output
DVCC	–	Power supply
DVSS	–	Ground supply

6.8 FRAM

The FRAM can be programmed using the JTAG port, Spy-Bi-Wire (SBW), the BSL, or in-system by the CPU. Features of the FRAM include:

- Byte and word access capability
- Programmable wait state generation
- Error correction coding (ECC)

6.9 Memory Protection

The device features memory protection of user access authority and write protection include:

- Securing the whole memory map to prevent unauthorized access from JTAG port or BSL, by writing JTAG and BSL signatures using the JTAG port, SBW, the BSL, or in-system by the CPU.
- Write protection enabled to prevent unwanted write operation to FRAM contents by setting the control bits with accordingly password in System Configuration register 0. For more detailed information, see the SYS chapter in the *MSP430FR4xx and MSP430FR2xx Family User's Guide*.

6.10 Peripherals

Peripherals are connected to the CPU through data, address, and control buses. All peripherals can be handled by using all instructions in the memory map. For complete module description, see the *MSP430FR4xx and MSP430FR2xx Family User's Guide*.

6.10.1 Power Management Module (PMM) and On-Chip Reference Voltages

The PMM includes an integrated voltage regulator that supplies the core voltage to the device. The PMM also includes supply voltage supervisor (SVS) and brownout protection. The brownout reset circuit (BOR) is implemented to provide the proper internal reset signal to the device during power-on and power-off. The SVS circuitry detects if the supply voltage drops below a user-selectable safe level. SVS circuitry is available on the primary supply.

The device contains three on-chip references:

- Internal shared reference (1.5 V, 2.0 V, or 2.5 V)
- 1.2 V for external reference (VREF pin)
- 1.2 V low-power reference for eCOMP

The internal shared reference is controlled by PMM settings to select 1.5 V, 2.0 V, or 2.5 V. This reference is internally connected to ADC channel 13. DVCC is internally connected to ADC channel 15. When DVCC is set as the reference voltage for ADC conversion, the DVCC can be easily represent as 式 1 by using ADC sampling reference without any external components support.

$$\text{DVCC} = (4095 \times \text{reference voltage}) \div \text{ADC result} \quad (1)$$

The internal shared reference (1.5 V, 2.0 V, or 2.5 V) is also internally connected to the built-in DAC of the comparator and SAC (MSP430FR235x devices only) built-in 12-bit DAC as the reference voltage. The source can be selected by setting the specific register configuration of each module For more information, see the *MSP430FR4xx and MSP430FR2xx Family User's Guide*.

P1.7/UCA0TXD/UCA0SIMO/TB0.2/TDO/OA1+/A7/VREF+ can support a buffered external 1.2-V output when EXTREFEN = 1 in the PMMCTL2 register. ADC channel 7 can also be selected to monitor this voltage. For more information, see the *MSP430FR4xx and MSP430FR2xx Family User's Guide*.

An additional low-power 1.2-V reference is internally connected to eCOMP0 and eCOMP1. This reference is activated by enabling eCOMP with the channel as threshold source. See 6.10.13 for more details.

6.10.2 Clock System (CS) and Clock Distribution

The clock system includes a 32-kHz low-frequency or up to 24-MHz high-frequency crystal oscillator (XT1), an internal very low-power low-frequency oscillator (VLO), an integrated 32-kHz RC oscillator (REFO), an integrated internal digitally controlled oscillator (DCO) that can use frequency-locked loop (FLL) locking with internal or external 32-kHz reference clock, and on-chip asynchronous high-speed clock (MODOSC). The clock system is designed to target cost-effective designs with minimal external components. A fail-safe mechanism is designed for XT1. The clock system module supports the following clock signals.

- Main Clock (MCLK): the system clock used by the CPU and all relevant peripherals accessed by the bus. All clock sources except MODOSC can be selected as the source with a predivider of 1, 2, 4, 8, 16, 32, 64, or 128.

Copyright © 2018–2019, Texas Instruments Incorporated

- Sub-Main Clock (SMCLK): the subsystem clock used by the peripheral modules. SMCLK derives from the MCLK with a predivider of 1, 2, 4, or 8. This means SMCLK is always equal to or less than MCLK.
- Auxiliary Clock (ACLK): this clock derived from the external XT1 clock, internal VLO, or internal REFO clock up to 40 kHz.

All peripherals have one or several clock sources, depending on specific functionality. 表 6-9 lists the clock distribution used in this device.

表 6-9. Clock Distribution

	CLOCK SOURCE SELECT BITS	MCLK	SMCLK	ACLK	MODCLK	VLOCLK	EXTERNAL PIN
Frequency Range		DC to 24 MHz	DC to 24 MHz	DC to 40 kHz	3.8 MHz ±21%	10 kHz ±50%	–
CPU	N/A	Default	–	–	–	–	–
FRAM	N/A	Default	–	–	–	–	–
RAM	N/A	Default	–	–	–	–	–
CRC	N/A	Default	–	–	–	–	–
MPY32	N/A	Default	–	–	–	–	–
ICC	N/A	Default	–	–	–	–	–
I/O	N/A	Default	–	–	–	–	–
TB0	TBSSEL	–	10b	01b	–	–	00b (TB0CLK pin)
TB1	TBSSEL	–	10b	01b	–	–	00b (TB1CLK pin)
TB2	TBSSEL	–	10b	01b	–	–	00b (TB2CLK pin)
TB3	TBSSEL	–	10b	01b	–	–	00b (TB3CLK pin)
eUSCI_A0	UCSSEL	–	10b or 11b	01b	–	–	00b (UCA0CLK pin)
eUSCI_A1	UCSSEL	–	10b or 11b	01b	–	–	00b (UCA1CLK pin)
eUSCI_B0	UCSSEL	–	10b or 11b	01b	–	–	00b (UCB0CLK pin)
eUSCI_B1	UCSSEL	–	10b or 11b	01b	–	–	00b (UCB1CLK pin)
MFM	N/A	–	Default	–	–	–	–
WDT	WDTSSEL	–	00b	01b	–	10b	–
ADC	ADCSSEL	–	10b or 11b	01b	00b	–	–
RTC Counter	RTCSS	–	01b(1)	01b(1)	–	11b	–

(1) Controlled by the RTCCKSEL bit in the SYSCFG2 register.

表 6-10. XTCLK Distribution

OPERATION MODE	CLOCK SOURCE SELECT BITS	XTHFCLK AM to LPM0	XTLFCLK AM to LPM3	XTLFCLK (LPMx.5) AM to LPM3.5
MCLK	SELMS	10b	10b	10b
SMCLK	SELMS	10b	10b	10b
REFO	SELREF	0b	0b	0b
ACLK	SELA	0b	0b	0b
RTC	RTCSS	–	10b	10b

6.10.3 General-Purpose Input/Output Port (I/O)

Up to 44 I/O ports are implemented.

- P1, P2, P3, and P4 are full 8-bit ports; P5 and P6 feature up to 5-bit and 7-bit ports, respectively.
- All individual I/O bits are independently programmable.
- Any combination of input, output, is possible for P1, P2, P3, P4, P5, and P6. Interrupt conditions are possible in P1, P2, P3, and P4.
- Programmable pullup or pulldown on all ports.
- Edge-selectable interrupt and LPM3.5, LPM4 and LPM4.5 wake-up input capability is available in P1, P2, P3, and P4.
- Read and write access to port-control registers is supported by all instructions.
- Ports can be accessed byte-wise or word-wise in pairs.

注: Configuration of digital I/Os after BOR reset

To prevent cross currents during start-up of the device, all port pins are high-impedance with Schmitt triggers and module functions disabled. To enable the I/O functions after a BOR reset, first configure the ports and then clear the LOCKLPM5 bit. For details, see the *Configuration After Reset* section in the *Digital I/O* chapter of the *MSP430FR4xx and MSP430FR2xx Family User's Guide*.

6.10.4 Watchdog Timer (WDT)

The primary function of the WDT module is to perform a controlled system restart after a software problem occurs. If the selected time interval expires, a system reset is generated. If the watchdog function is not needed in an application, the module can be configured as interval timer and can generate interrupts at selected time intervals.

表 6-11 lists the clock sources that can be used by the WDT.

表 6-11. WDT Clocks

WDTSSEL	NORMAL OPERATION (WATCHDOG AND INTERVAL TIMER MODE)
00	SMCLK
01	ACLK
10	VLOCLK
11	Reserved

6.10.5 System Module (SYS)

The SYS module handles many of the system functions within the device. These include power-on reset (POR) and power-up clear (PUC) handling, NMI source selection and management, reset interrupt vector generators (see 表 6-12), bootloader entry mechanisms, and configuration management (device descriptors). SYS also includes a data exchange mechanism through SBW called a JTAG mailbox that can be used in the application.

Copyright © 2018–2019, Texas Instruments Incorporated

表 6-12. System Module Interrupt Vector Registers

INTERRUPT VECTOR REGISTER	ADDRESS	INTERRUPT EVENT	VALUE	PRIORITY
SYSRSTIV, System Reset	015Eh	No interrupt pending	00h	
		Brownout (BOR)	02h	Highest
		RSTIFG $\overline{\text{RST}}$/NMI (BOR)	04h	
		PMMSWBOR software BOR (BOR)	06h	
		LPMx.5 wake up (BOR)	08h	
		Security violation (BOR)	0Ah	
		Reserved	0Ch	
		SVSHIFG SVSH event (BOR)	0Eh	
		Reserved	10h	
		Reserved	12h	
		PMMSWPOR software POR (POR)	14h	
		WDTIFG watchdog time-out (PUC)	16h	
		WDTPW password violation (PUC)	18h	
		FRCTLPW password violation (PUC)	1Ah	
		Uncorrectable FRAM bit error detection	1Ch	
		Peripheral area fetch (PUC)	1Eh	
		PMMPW PMM password violation (PUC)	20h	
		Reserved	22h	
		FLL unlock (PUC)	24h	
		Reserved	26h to 3Eh	Lowest
SYSSNIV, System NMI	015Ch	No interrupt pending	00h	
		SVS low-power reset entry	02h	Highest
		Uncorrectable FRAM bit error detection	04h	
		Reserved	06h	
		Reserved	08h	
		Reserved	0Ah	
		Reserved	0Ch	
		Reserved	0Eh	
		Reserved	10h	
		VMAIFG Vacant memory access	12h	
		JMBINIFG JTAG mailbox input	14h	
		JMBOUTIFG JTAG mailbox output	16h	
		Correctable FRAM bit error detection	18h	
		Reserved	1Ah to 1Eh	Lowest
SYSUNIV, User NMI	015Ah	No interrupt pending	00h	
		NMIIFG NMI pin or SVS_H event	02h	Highest
		OFIFG oscillator fault	04h	
		Reserved	06h to 1Eh	Lowest

6.10.6 Cyclic Redundancy Check (CRC)

The 16-bit cyclic redundancy check (CRC) module produces a signature based on a sequence of data values and can be used for data checking purposes. The CRC generation polynomial is compliant with CRC-16-CCITT standard of $x^{16} + x^{12} + x^5 + 1$.

6.10.7 Interrupt Compare Controller (ICC)

The Interrupt Compare Controller (ICC) allows all maskable interrupt sources to be scheduled in a preemptive mechanism. Each interrupt source is specified as a source of ICC module. Each source supports a 4-level software interrupt priority other than the one tired with interrupt vector. When ICC module is enabled, the ISR in lower software priority can be interrupted by higher priority. It is required to enable GIE in ISR for proper ICC operation. For details, see the ICC chapter of the *MSP430FR4xx and MSP430FR2xx Family User's Guide*. 表 6-13 lists the ICC source configurations.

表 6-13. ICC Interrupt Source Assignments

REGISTER	BITS	INTERRUPT SOURCE	INTERRUPT FLAG	SYSTEM INTERRUPT	WORD ADDRESS	PRIORITY
ICCILRS0	ILSR0	P4	P4IFG.0 to P4IFG.7 (P4IV)	Maskable	FFCEh	39
	ILSR1	P3	P3IFG.0 to P3IFG.7 (P3IV)	Maskable	FFD0h	40
	ILSR2	P2	P2IFG.0 to P2IFG.7 (P2IV)	Maskable	FFD2h	41
	ILSR3	P1	P1IFG.0 to P1IFG.7 (P1IV)	Maskable	FFD4h	42
	ILSR4	SAC3 DAC, SAC1 DAC(1)	DACIFG, (SAC3IV, SAC1IV)(1)	Maskable	FFD6h	43
	ILSR5	SAC2 DAC, SAC0 DAC(1)	DACIFG (SAC2IV, SAC0IV)(1)	Maskable	FFD8h	44
	ILSR6	eCOMP1, eCOMP0	CPIIFG, CPIFG (CP1IV, CP0IV)	Maskable	FFDAh	45
	ILSR7	ADC	ADCIFG0, ADCINIFG, ADCLOIFG, ADCHIIFG, ADCTOVIFG, ADCOVIFG (ADCIV)	Maskable	FFDCh	46
ICCILRS1	ILSR8	eUSCI_B1 Receive or Transmit	UCB1RXIFG, UCB1TXIFG (SPI mode) UCALIFG, UCNACKIFG, UCSTTIFG, UCSTPIFG, UCRXIFG0, UCTXIFG0, UCRXIFG1, UCTXIFG1, UCRXIFG2, UCTXIFG2, UCRXIFG3, UCTXIFG3, UCCNTIFG, UCBIT9IFG,UCCLTOIFG(I^2C mode) (UCB0IV)	Maskable	FFDEh	47
	ILSR9	eUSCI_B0 Receive or Transmit	UCB0RXIFG, UCB0TXIFG (SPI mode) UCALIFG, UCNACKIFG, UCSTTIFG, UCSTPIFG, UCRXIFG0, UCTXIFG0, UCRXIFG1, UCTXIFG1, UCRXIFG2, UCTXIFG2, UCRXIFG3, UCTXIFG3, UCCNTIFG, UCBIT9IFG,UCCLTOIFG(I^2C mode) (UCB0IV)	Maskable	FFE0h	48
	ILSR10	eUSCI_A1 Receive or Transmit	UCTXCPTIFG, UCSTTIFG, UCRXIFG, UCTXIFG (UART mode) UCRXIFG, UCTXIFG (SPI mode) (UCA0IV))	Maskable	FFE2h	49
	ILSR11	eUSCI_A0 Receive or Transmit	UCTXCPTIFG, UCSTTIFG, UCRXIFG, UCTXIFG (UART mode) UCRXIFG, UCTXIFG (SPI mode) (UCA0IV))	Maskable	FFE4h	50
	ILSR12	Watchdog Timer Interval mode	WDTIFG	Maskable	FFE6h	51
	ILSR13	RTC Counter	RTCIFG	Maskable	FFE8h	52
	ILSR14	Timer3_B7	TB3CCR1 CCIFG1, TB3CCR2 CCIFG2, TB3CCR3 CCIFG3, TB3CCR4 CCIFG4, TB3CCR5 CCIFG5, TB3CCR6 CCIFG6, TB3IFG (TB3IV)	Maskable	FFEAh	53
	ILSR15	Timer3_B7	TB3CCR0 CCIFG0	Maskable	FFECh	54

(1) MSP430FR235x devices only

Copyright © 2018–2019, Texas Instruments Incorporated

表 6-13. ICC Interrupt Source Assignments (continued)

REGISTER	BITS	INTERRUPT SOURCE	INTERRUPT FLAG	SYSTEM INTERRUPT	WORD ADDRESS	PRIORITY
ICCILRS2	ILSR16	Timer2_B3	TB2CCR1 CCIFG1, TB2CCR2 CCIFG2, TB2IFG (TB2IV)	Maskable	FFEEh	55
	ILSR17	Timer2_B3	TB2CCR0 CCIFG0	Maskable	FFF0h	56
	ILSR18	Timer1_B3	TB1CCR1 CCIFG1, TB1CCR2 CCIFG2, TB1IFG (TB1IV)	Maskable	FFF2h	57
	ILSR19	Timer1_B3	TB1CCR0 CCIFG0	Maskable	FFF4h	58
	ILSR20	Timer0_B3	TB0CCR1 CCIFG1, TB0CCR2 CCIFG2, TB0IFG (TB0IV)	Maskable	FFF6h	59
	ILSR21	Timer0_B3	TB0CCR0 CCIFG0	Maskable	FFF8h	60
	ILSR22	N/A	N/A	N/A	N/A	N/A
	ILSR23	N/A	N/A	N/A	N/A	N/A
ICCILRS3	ILSR24	N/A	N/A	N/A	N/A	N/A
	ILSR25	N/A	N/A	N/A	N/A	N/A
	ILSR26	N/A	N/A	N/A	N/A	N/A
	ILSR27	N/A	N/A	N/A	N/A	N/A
	ILSR28	N/A	N/A	N/A	N/A	N/A
	ILSR29	N/A	N/A	N/A	N/A	N/A
	ILSR30	N/A	N/A	N/A	N/A	N/A
	ILSR31	N/A	N/A	N/A	N/A	N/A

6.10.8 Enhanced Universal Serial Communication Interface (eUSCI_A0, eUSCI_A1, eUSCI_B0, eUSCI_B1)

The eUSCI modules are used for serial data communications (see 表 6-14). The eUSCI_A module supports either UART or SPI communications. The eUSCI_B module supports either SPI or I^2C communications. Additionally, eUSCI_A supports automatic baud-rate detection and IrDA..

表 6-14. eUSCI Pin Configurations

	PIN	UART	SPI
eUSCI_A0	P1.7	TXD	SIMO
	P1.6	RXD	SOMI
	P1.5	–	SCLK
	P1.4	–	STE
eUSCI_A1	**PIN**	**UART**	**SPI**
	P4.3	TXD or $\overline{\text{TXD}}$	SIMO
	P4.2	RXD or $\overline{\text{RXD}}$	SOMI
	P4.1	–	SCLK
	P4.0	–	STE
eUSCI_B0	**PIN**	**I^2C**	**SPI**
	P1.3	SCL	SOMI
	P1.2	SDA	SIMO
	P1.1	–	SCLK
	P1.0	–	STE
eUSCI_B1	**PIN**	**I^2C**	**SPI**
	P4.7	SCL	SOMI
	P4.6	SDA	SIMO
	P4.5	–	SCLK
	P4.4	–	STE

The eUSCI_A1 can work as UART in inverting polarity mode by port settings (see 表 6-15). When PSEL = 01b, the normal UART or SPI mode is used. When PSEL = 10b, the inverted UART mode is enabled to transmit and receive data in inverted polarity. In this mode, eUSCI_A1 can also wake up the device from LPM3 by detecting a rising edge of start bit according the falling edge in normal mode.

表 6-15. eUSCI_A1 UART Polarity Configurations

eUSCI_A1	PSEL = 01b	PSEL = 10b
P4.3	TXD	$\overline{TXD}$
P4.4	RXD	$\overline{RXD}$

6.10.9 Timers (Timer0_B3, Timer1_B3, Timer2_B3, Timer3_B7)

The Timer0_B3, Timer1_B3, and Timer2_B3 modules are 16-bit timers and counters with three capture/compare registers each. Timer3_B7 is a 16-bit timers with seven capture/compare registers each. Each can support multiple captures or compares, PWM outputs, and interval timing (see 表 6-16, 表 6-17, 表 6-18, and 表 6-19). Each has extensive interrupt capabilities. Interrupts can be generated from the counter on overflow conditions and from each of the capture/compare registers. The CCR0 registers on all timers are not externally connected and can only be used for hardware period timing and interrupt generation. In Up Mode, they can be used to set the overflow value of the counter.

表 6-16. Timer0_B3 Signal Connections

PORT PIN	DEVICE INPUT SIGNAL	MODULE INPUT NAME	MODULE BLOCK	MODULE OUTPUT SIGNAL	DEVICE OUTPUT SIGNAL
P2.7	TB0CLK	TBCLK	Timer	N/A	
	ACLK (internal)	ACLK			
	SMCLK (internal)	SMCLK			
	N/A	INCLK			
	From RTC (internal)	CCI0A	CCR0	TB0	Not used
	ACLK (internal)	CCI0B			Timer1_B3 CCI0B input
	DVSS	GND			
	DVCC	V_{CC}			
P1.6	TB0.1	CCI1A	CCR1	TB1	TB0.1
	From eCOMP0.O (internal)	CCI1B			Timer1_B3 CCI1B input
	DVSS	GND			
	DVCC	V_{CC}			
P1.7	TB0.2	CCI2A	CCR2	TB2	TB0.2
	N/A	CCI2B			Timer1_B3 INCLK Timer1_B3 CCI2B input, IR carrier input
	DVSS	GND			
	DVCC	V_{CC}			

Copyright © 2018–2019, Texas Instruments Incorporated

表 6-17. Timer1_B3 Signal Connections

PORT PIN	DEVICE INPUT SIGNAL	MODULE INPUT NAME	MODULE BLOCK	MODULE OUTPUT SIGNAL	DEVICE OUTPUT SIGNAL
P2.2	TB1CLK	TBCLK	Timer	N/A	
	ACLK (internal)	ACLK			
	SMCLK (internal)	SMCLK			
	Timer0_B3 CCR2B output (internal)	INCLK			
	Timer3_B7 CCR0B output (internal)	CCI0A	CCR0	TB0	Not used
	Timer0_B3 CCR0B output (internal)	CCI0B			Not used
	DVSS	GND			
	DVCC	V_{CC}			
P2.0	TB1.1	CCI1A	CCR1	TB1	TB1.1
	Timer0_B3 CCR1B output (internal)	CCI1B			To ADC trigger
	DVSS	GND			
	DVCC	V_{CC}			
P2.1	TB1.2	CCI2A	CCR2	TB2	TB1.2
	Timer0_B3 CCR2B output (internal)	CCI2B			IR coding input
	DVSS	GND			
	DVCC	V_{CC}			

表 6-18. Timer2_B3 Signal Connections

PORT PIN	DEVICE INPUT SIGNAL	MODULE INPUT NAME	MODULE BLOCK	MODULE OUTPUT SIGNAL	DEVICE OUTPUT SIGNAL
P2.7	TB2CLK	TBCLK	Timer	N/A	
	ACLK (internal)	ACLK			
	SMCLK (internal)	SMCLK			
	$\overline{\text{TB2CLK}}$	INCLK			
	Not used	CCI0A	CCR0	TB0	Not used
	DVSS	GND			
	DVCC	V_{CC}			
	MFM Complete Event	CCI0B			MFM start trigger
P5.0	TB2.1	CCI1A	CCR1	TB1	TB2.1
	From eCOMP1.O (internal)	CCI1B			To SAC DAC update trigger 10b(1)
	DVSS	GND			
	DVCC	V_{CC}			
P5.1	TB2.2	CCI2A	CCR2	TB2	TB2.2
	Not used	CCI2B			To SAC DAC update trigger 11b(1)
	DVSS	GND			
	DVCC	V_{CC}			

(1) MSP430FR235x devices only

表 6-19. Timer3_B7 Signal Connections

PORT PIN	DEVICE INPUT SIGNAL	MODULE INPUT NAME	MODULE BLOCK	MODULE OUTPUT SIGNAL	DEVICE OUTPUT SIGNAL
P6.6	TB3CLK	TBCLK	Timer	N/A	
	ACLK (internal)	ACLK			
	SMCLK (internal)	SMCLK			
	$\overline{\text{TB3CLK}}$	INCLK			
	Not used	CCI0A	CCR0	TB0	Not used
	Not used	CCI0B			To Timer1_B3 CCI0A
	DVSS	GND			
	DVCC	V_{CC}			
P6.0	TB3.1	CCI1A	CCR1	TB1	TB3.1
	Not used	CCI1B			
	DVSS	GND			
	DVCC	V_{CC}			
P6.1	TB3.2	CCI2A	CCR2	TB2	TB3.2
P4.0	ISORXD	CCI2B			AND UCA1TXD ISOTXD
	DVSS	GND			
	DVCC	V_{CC}			
P6.2	TB3.3	CCI3A	CCR3	TB3	TB3.3
	Not used	CCI3B			
	DVSS	GND			
	DVCC	V_{CC}			
P6.3	TB3.4	CCI4A	CCR4	TB4	TB3.4
	Not used	CCI4B			Not used
	DVSS	GND			
	DVCC	V_{CC}			
P6.4	TB3.5	CCI5A	CCR5	TB5	TB3.5
	Not used	CCI5B			Not used
	DVSS	GND			
	DVCC	V_{CC}			
P6.5	TB3.6	CCI6A	CCR6	TB6	TB3.6
	Not used	CCI6B			Not used
	DVSS	GND			
	DVCC	V_{CC}			

The interconnection of Timer0_B3 and Timer1_B3 can be used to modulate the eUSCI_A pin of UCA0TXD/UCA0SIMO in either ASK or FSK mode, with which a user can easily acquire a modulated infrared command for directly driving an external IR diode. The IR functions are fully controlled by SYS configuration registers 1 including IREN (enable), IRPSEL (polarity select), IRMSEL (mode select), IRDSSEL (data select), and IRDATA (data) bits. For more information, see the SYS chapter in the *MSP430FR4xx and MSP430FR2xx Family User's Guide*.

The Timer_B module feature the function to put Timer_B all outputs into a high impedance state when the selected source is triggered. The source can be selected from external pin or internal of the device, it is controlled by TBxTRG in SYS. For more information, see the SYS chapter in the *MSP430FR4xx and MSP430FR2xx Family User's Guide*.

The Timer2_B3 CCR0 is tied with the Manchester function module (MFM).

Copyright © 2018–2019, Texas Instruments Incorporated

表 6-20 lists the Timer_B high-impedance trigger sources.

表 6-20. TBxOUTH

TBxTRGSEL	TBxOUTH TRIGGER SOURCE SELECTION	TIMER_B PAD OUTPUT HIGH IMPEDANCE
TB0TRGSEL = 0	eCOMP0 output (internal)	P1.6, P1.7
TB0TRGSEL= 1	P1.2	
TB1TRGSEL = 0	eCOMP0 output (internal)	P2.0, P2.1
TB1TRGSEL = 1	P2.3	
TB2TRGSEL = 0	eCOMP1 output (internal)	P5.0, P5.1
TB2TRGSEL = 1	P5.3	
TB3TRGSEL = 0	eCOMP1 output (internal)	P6.0, P6.1, P6.2, P6.3, P6.4, P6.5
TB3TRGSEL = 1	N/A	

6.10.10 Backup Memory (BKMEM)

The BKMEM supports data retention functionality during LPM3.5 mode. This device provides up to 32 bytes that are retained during LPM3.5.

6.10.11 Real-Time Clock (RTC) Counter

The RTC counter is a 16-bit modulo counter that is functional in AM, LPM0, LPM3, LPM4, and LPM3.5. This module can periodically wake up the CPU from LPM0, LPM3, LPM4, and LPM3.5 based on timing from a low-power clock source such as the XT1, ACLK, and VLO clocks. In AM, RTC can be driven by SMCLK to generate high-frequency timing events and interrupts. ACLK and SMCLK both can source to the RTC; however, only one of them can be selected at a time. The RTC overflow events can trigger:

- Timer0_B3 CCI0A
- ADC conversion trigger when ADCSHSx bits are set as 01b

6.10.12 12-Bit Analog-to-Digital Converter (ADC)

The 12-bit ADC module supports fast 12-bit analog-to-digital conversions with single-ended input. The module implements a 12-bit SAR core, sample select control, reference generator and a conversion result buffer. A window comparator with a lower and upper limits allows CPU-independent result monitoring with three window comparator interrupt flags.

The ADC supports 12 external inputs and four internal inputs (see 表 6-21).

表 6-21. ADC Channel Connections

ADCINCHx	ADC CHANNELS	EXTERNAL PIN OUTPUT
0	A0/Veref+	P1.0
1	A1/	P1.1
2	A2/Veref-	P1.2
3	A3	P1.3
4	A4	P1.4
5	A5	P1.5
6	A6	P1.6
7	A7 (1)	P1.7
8	A8	P5.0
9	A9	P5.1
10	A10	P5.2
11	A11	P5.3
12	On-chip temperature sensor	N/A
13	Internal shared reference voltage (1.5 V, 2.0 V, or 2.5 V)	N/A
14	DVSS	N/A
15	DVCC	N/A

(1) When A7 is used, the PMM 1.2-V reference voltage can be output to this pin by setting the PMM control register. The 1.2-V voltage can be measured by channel A7.

The analog-to-digital conversion can be started by software or a hardware trigger. 表 6-22 lists the trigger sources that are available.

表 6-22. ADC Trigger Signal Connections

ADCSHSx		TRIGGER SOURCE
BINARY	DECIMAL	
00	0	ADCSC bit (software trigger)
01	1	RTC event
10	2	TB1.1B
11	3	eCOMP0 COUT

Copyright © 2018–2019, Texas Instruments Incorporated

6.10.13 Enhanced Comparator

This device features two enhanced comparators: eCOMP0 and eCOMP1. The enhanced comparator is an analog voltage comparator with a built-in 6-bit DAC as an internal voltage reference. The integrated 6-bit DAC can be set to 64 steps for the comparator reference voltage. This module has 4-level programmable hysteresis and configurable power modes: high-power mode or low-power mode.

The eCOMP0 supports a propagation delay up to 1 µs in high-power mode. In low-power mode, eCOMP0 supports 3.2-µs delay with 1.5-µA leakage at room temperature, which can be an ideal wake-up source in LPM3 for a voltage monitor.

The eCOMP1 supports a propagation delay up to 100 ns in high-power mode. In low-power mode, eCOMP1 supports 320-ns delay with 10-µA leakage at room temperature.

Both eCOMP0 and eCOMP1 contains a programmable 6-bit DAC that can use internal shared reference (1.5, 2.0, or 2.5-V) for high precision comparison threshold. In addition to internal shared reference, a low-power 1.2-V reference is fixed at channel 2 of both inverting and non-inverting path that allows the DAC turned off for saving powers.

The eCOMP0 supports external inputs and internal inputs (see 表 6-23) and outputs (see 表 6-25)

表 6-23. eCOMP0 Input Channel Connections

CPPSEL	eCOMP0 CHANNELS	CPNSEL	eCOMP0 CHANNELS
000	P1.0/COMP0.0/A0	000	P1.0/COMP0.0/A0
001	P1.1/OA0O/COMP0.1/A1	001	P1.1/OA0O/COMP0.1/A1
010	Low-power 1.2-V reference	010	Low-power 1.2-V reference
011	N/A	011	N/A
100	N/A	100	N/A
101	P1.1/OA0O/COMP0.1/A1	101	P3.1/OA2O
110	eCOMP0 6-bit DAC	110	eCOMP0 6-bit DAC

表 6-24. eCOMP1 Input Channel Connections

CPPSEL	eCOMP1 CHANNELS	CPNSEL	eCOMP1 CHANNELS
000	P2.5/COMP1.0	000	P2.5/COMP1.0
001	P2.4/COMP1.1	001	P2.4/COMP1.1
010	Low-power 1.2-V reference	010	Low-power 1.2-V reference
011	N/A	011	N/A
100	N/A	100	N/A
101	P1.5/OA1O/A5	101	P3.5/OA3O
110	eCOMP1 6-bit DAC	110	eCOMP1 6-bit DAC

表 6-25. eCOMP0 Output Channel Connections

ECOMP0 OUT	EXTERNAL PINOUT, MODULE
1	P2.0
2	TB0.1B, TB0 (TB0OUTH), TB1 (TB1OUTH), ADC trigger
3	Reserved
4	Reserved

表 6-26. eCOMP1 Output Channel Connections

ECOMP1 OUT	EXTERNAL PINOUT, MODULE
1	P2.1
2	TB2.1B, TB2 (TB2OUTH), TB3 (TB3OUTH)
3	Reserved
4	MFM input

6.10.14 Manchester Function Module (MFM)

The MFM is a dedicated module residing between a pair of pins and eUSCI_B1 to encode and decode Manchester-coded data. For more information, see the MFM chapter in the *MSP430FR4xx and MSP430FR2xx Family User's Guide*.

When enabled by setting PSEL, the MFM module receives and transmits data through P5.0/TB2.1/MFM.RX/A8 and P5.1/TB2.2/MFM.TX/A9, respectively. The MFM always works in SPI master mode, and the eUSCI_B1 must be configured in 4-wire SPI slave mode.

6.10.15 Smart Analog Combo (SAC) (MSP430FR235x Devices Only)

The MSP430FR235x devices integrate four SAC modules: SAC0, SAC1, SAC2, and SAC3. The SAC integrates a high-performance low-power operational amplifier. SAC-L3 supports a hybrid configuration of general-purpose amplifier, 12-bit voltage reference DAC, and a multiplex switch array. For more information, see the SAC chapter in the *MSP430FR4xx and MSP430FR2xx Family User's Guide*. Only MSP430FR235x devices implement the SAC modules. MSP430FR215x devices do not support SAC modules.

The SAC0 and SAC2 are interconnected and support external inputs and internal inputs (see 表 6-27 and 表 6-28).

表 6-27. SAC0 Channel Connections

PSEL	SAC0 OA NONINVERTING CHANNELS	NSEL	SAC0 OA INVERTING CHANNELS
00	P1.3/OA0+/A3	00	P1.2/OA0-/A2
01	SAC0 12-bit DAC	01	PGA feedback
10	P3.1/OA2O, SAC2 OA output	10	P3.1/OA2O, SAC2 OA output
11	N/A	11	N/A

表 6-28. SAC2 Channel Connections

PSEL	SAC2 OA NONINVERTING CHANNELS	NSEL	SAC2 OA INVERTING CHANNELS
00	P3.3/OA2+	00	P3.2/OA2-
01	SAC2 12-bit DAC	01	PGA feedback
10	P1.1/UCB0CLK/ACLK/OA0O/COMP0.1/A1, SAC0 OA output	10	P1.1/UCB0CLK/ACLK/OA0O/COMP0.1/A1, SAC0 OA output
11	N/A	11	N/A

The SAC1 and SAC3 are interconnected and support external inputs and internal inputs (see 表 6-29 and 表 6-30).

表 6-29. SAC1 Channel Connections

PSEL	SAC1 OA NONINVERTING CHANNELS	NSEL	SAC1 OA INVERTING CHANNELS
00	P1.7/OA1+/A7	00	P1.6/OA1-/A6
01	SAC1 12-bit DAC	01	PGA feedback
10	P3.5/OA3O, SAC3 OA output	10	P3.5/OA3O, SAC3 OA output
11	N/A	11	N/A

Copyright © 2018–2019, Texas Instruments Incorporated

表 6-30. SAC3 Channel Connections

PSEL	SAC3 OA NONINVERTING CHANNELS	NSEL	SAC3 OA INVERTING CHANNELS
00	P3.7/OA3+	00	P3.6/OA3-
01	SAC3 12-bit DAC	01	PGA feedback
10	P1.5/OA1O/A5, SAC1 OA output	10	P1.5/OA1O/A5, SAC1 OA output
11	N/A	11	N/A

Each SAC DAC supports two selectable voltage references (see 表 6-31).

表 6-31. SACx DAC Reference Selection

DACSREF	SACx DAC REFERENCE SELECTION
0	DVCC
1	Internal shared reference (1.5, 2.0, or 2.5 V)
DACSREF	**SAC1 DAC REFERENCE**
0	DVCC
1	Internal shared reference (1.5, 2.0, or 2.5 V)
DACSREF	**SAC2 DAC REFERENCE**
0	DVCC
1	Internal shared reference (1.5, 2.0, or 2.5 V)
DACSREF	**SAC3 DAC REFERENCE**
0	DVCC
1	Internal shared reference (1.5, 2.0, or 2.5 V)

Each SAC DAC supports one software trigger and two hardware trigger from chip signals.

表 6-32. SACx DAC Hardware Trigger Selection

DACLSEL	SAC0 DAC HARDWARE TRIGGER	DACLSEL	SAC1 DAC HARDWARE TRIGGER
00	Writing SAC0DACDAT register	00	Writing SAC1DACDAT register
01	N/A	01	N/A
10	TB2.1	10	TB2.1
11	TB2.2	11	TB2.2
DACLSEL	**SAC2 DAC HARDWARE TRIGGER**	**DACLSEL**	**SAC3 DAC HARDWARE TRIGGER**
00	Writing SAC2DACDAT register	00	Writing SAC3DACDAT register
01	N/A	01	N/A
10	TB2.1	10	TB2.1
11	TB2.2	11	TB2.2

6.10.16 eCOMP0, eCOMP1, SAC0, SAC1, SAC2, and SAC3 Interconnection (MSP430FR235x Devices Only)

The high-performance analog modules of eCOMP0, SAC0, and SAC2 are internally connected (see 図 6-1).

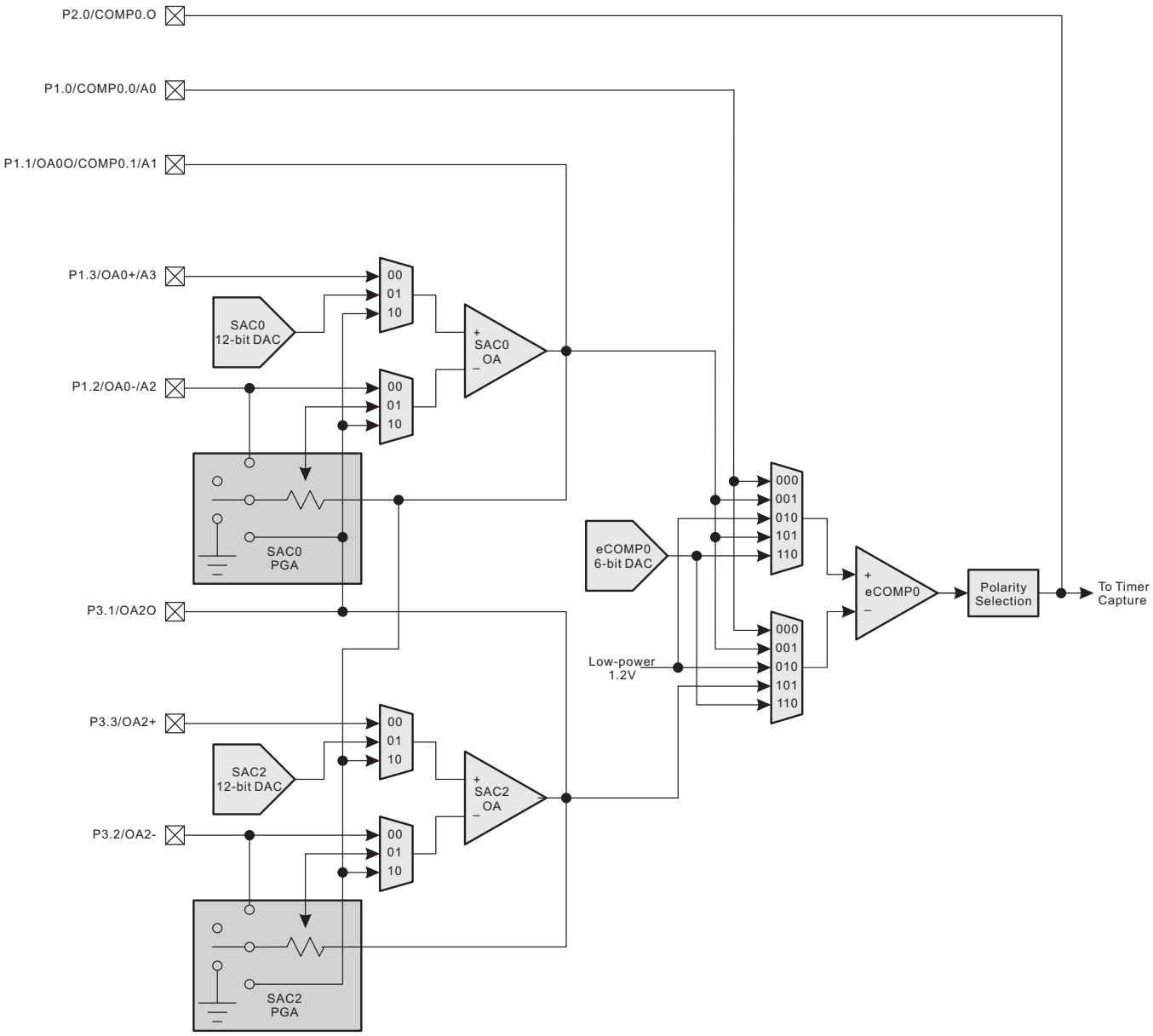

図 6-1. eCOMP0, SAC0, SAC2 Interconnection

Copyright © 2018–2019, Texas Instruments Incorporated

The high-performance analog modules of eCOMP1, SAC1, and SAC3 are internally connected (see 図 6-2):

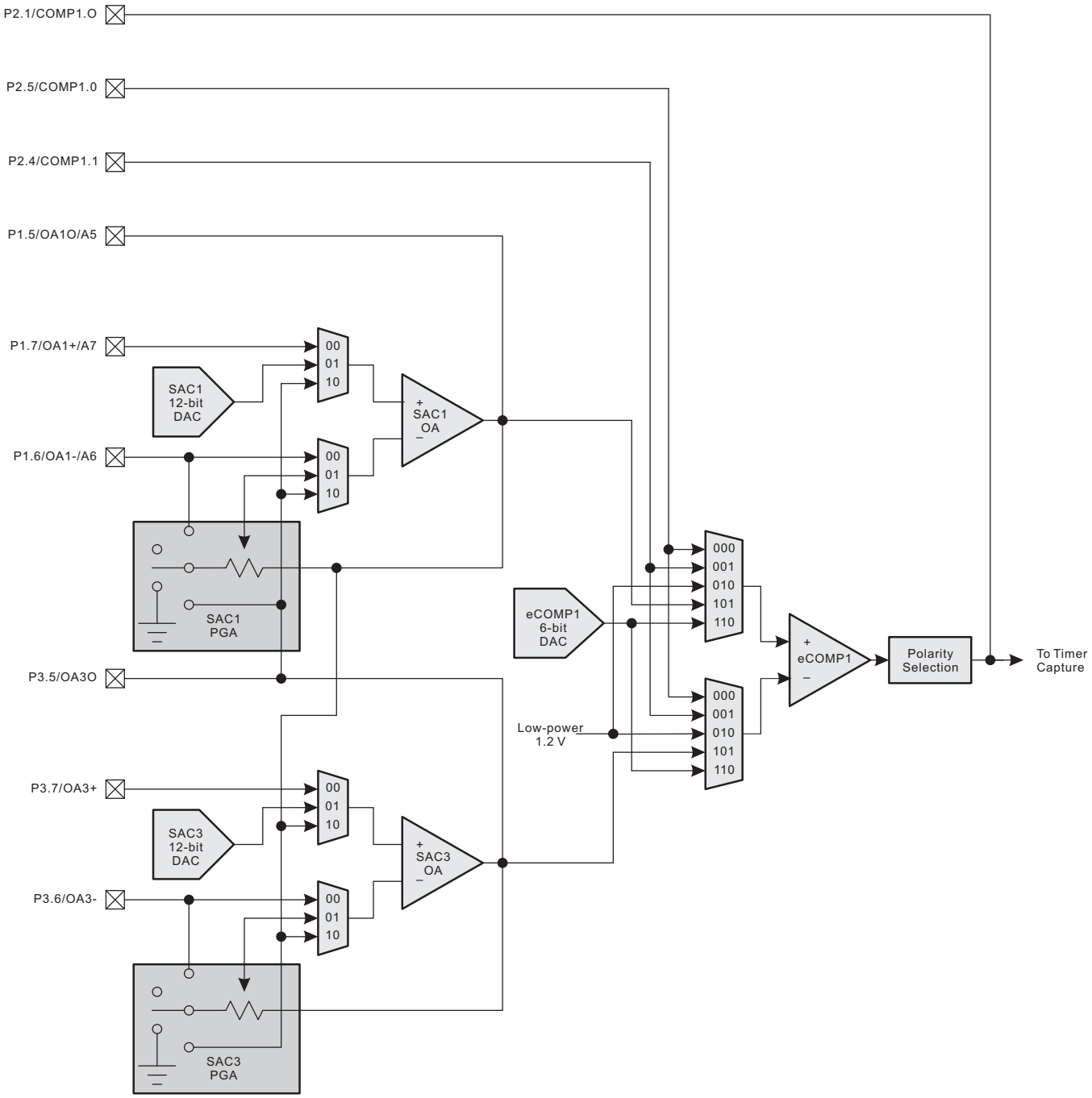

図 6-2. eCOMP1, SAC1, SAC3 Interconnection

6.10.17 Cross-Chip Interconnection (SACx are MSP430FR235x Devices Only)

This section describes the cross-chip interconnections in a full-featured view.

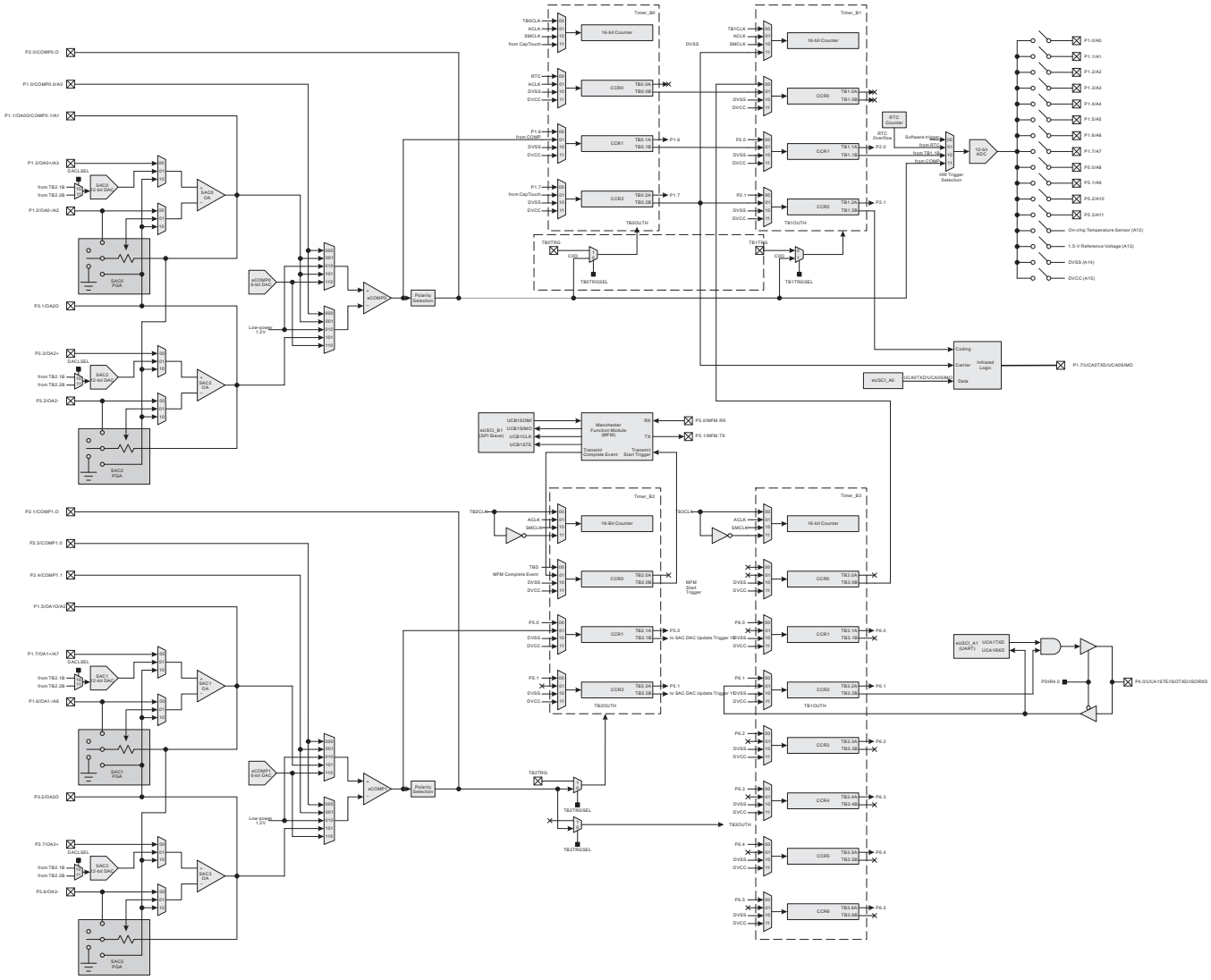

図 6-3. Cross-Chip Interconnection

Copyright © 2018–2019, Texas Instruments Incorporated

6.10.18 Embedded Emulation Module (EEM)

The EEM supports real-time in-system debugging. The EEM on these devices has the following features:

- Three hardware triggers or breakpoints on memory access
- One hardware trigger or breakpoint on CPU register write access
- Up to four hardware triggers can be combined to form complex triggers or breakpoints
- One cycle counter
- Clock control on module level

6.10.19 Peripheral File Map

表 6-33 lists the base address and the memory size of each peripheral's registers.

表 6-33. Peripherals Summary

MODULE NAME	BASE ADDRESS	SIZE
Special Functions (see 表 6-34)	0100h	0010h
PMM (see 表 6-35)	0120h	0020h
SYS (see 表 6-36)	0140h	0040h
CS (see 表 6-37)	0180h	0020h
FRAM (see 表 6-38)	01A0h	0010h
CRC (see 表 6-39)	01C0h	0008h
WDT (see 表 6-40)	01CCh	0002h
Port P1, P2 (see 表 6-41)	0200h	0020h
Port P3, P4 (see 表 6-42)	0220h	0020h
Port P5, P6 (see 表 6-43)	0240h	0020h
RTC (see 表 6-44)	0300h	0010h
Timer0_B3 (see 表 6-45)	0380h	0030h
Timer1_B3 (see 表 6-46)	03C0h	0030h
Timer2_B3 (see 表 6-47)	0400h	0030h
Timer3_B7 (see 表 6-48)	0440h	0030h
MPY32 (see 表 6-49)	04C0h	0030h
eUSCI_A0 (see 表 6-50)	0500h	0020h
eUSCI_B0 (see 表 6-51)	0540h	0030h
eUSCI_A1 (see 表 6-52)	0580h	0020h
eUSCI_B1 (see 表 6-53)	05C0h	0030h
Backup Memory (see 表 6-54)	0660h	0020h
ICC (see 表 6-55)	06C0h	0010h
ADC (see 表 6-56)	0700h	0040h
eCOMP0 (see 表 6-57)	08E0h	0020h
eCOMP1 (see 表 6-58)	0900h	0020h
SAC0 (see 表 6-59) (1)	0C80h	0010h
SAC1 (see 表 6-60) (1)	0C90h	0010h
SAC2 (see 表 6-61) (1)	0CA0h	0010h
SAC3 (see 表 6-62) (1)	0CB0h	0010h

(1) MSP430FR235x devices only

表 6-34. Special Function Registers (Base Address: 0100h)

REGISTER DESCRIPTION	ACRONYM	OFFSET
SFR interrupt enable	SFRIE1	00h
SFR interrupt flag	SFRIFG1	02h
SFR reset pin control	SFRRPCR	04h

表 6-35. PMM Registers (Base Address: 0120h)

REGISTER DESCRIPTION	ACRONYM	OFFSET
PMM control 0	PMMCTL0	00h
PMM control 1	PMMCTL1	02h
PMM control 2	PMMCTL2	04h
PMM interrupt flags	PMMIFG	0Ah
PM5 control 0	PM5CTL0	10h

表 6-36. SYS Registers (Base Address: 0140h)

REGISTER DESCRIPTION	ACRONYM	OFFSET
System control	SYSCTL	00h
Bootloader configuration area	SYSBSLC	02h
JTAG mailbox control	SYSJMBC	06h
JTAG mailbox input 0	SYSJMBI0	08h
JTAG mailbox input 1	SYSJMBI1	0Ah
JTAG mailbox output 0	SYSJMBO0	0Ch
JTAG mailbox output 1	SYSJMBO1	0Eh
User NMI vector generator	SYSUNIV	1Ah
System NMI vector generator	SYSSNIV	1Ch
Reset vector generator	SYSRSTIV	1Eh
System configuration 0	SYSCFG0	20h
System configuration 1	SYSCFG1	22h
System configuration 2	SYSCFG2	24h
System configuration 3	SYSCFG3	26h

表 6-37. CS Registers (Base Address: 0180h)

REGISTER DESCRIPTION	ACRONYM	OFFSET
CS control 0	CSCTL0	00h
CS control 1	CSCTL1	02h
CS control 2	CSCTL2	04h
CS control 3	CSCTL3	06h
CS control 4	CSCTL4	08h
CS control 5	CSCTL5	0Ah
CS control 6	CSCTL6	0Ch
CS control 7	CSCTL7	0Eh
CS control 8	CSCTL8	10h

Copyright © 2018–2019, Texas Instruments Incorporated

表 6-38. FRAM Registers (Base Address: 01A0h)

REGISTER DESCRIPTION	ACRONYM	OFFSET
FRAM control 0	FRCTL0	00h
General control 0	GCCTL0	04h
General control 1	GCCTL1	06h

表 6-39. CRC Registers (Base Address: 01C0h)

REGISTER DESCRIPTION	ACRONYM	OFFSET
CRC data input	CRC16DI	00h
CRC data input reverse byte	CRCDIRB	02h
CRC initialization and result	CRCINIRES	04h
CRC result reverse byte	CRCRESR	06h

表 6-40. WDT Registers (Base Address: 01CCh)

REGISTER DESCRIPTION	ACRONYM	OFFSET
Watchdog timer control	WDTCTL	00h

表 6-41. Port P1, P2 Registers (Base Address: 0200h)

REGISTER DESCRIPTION	ACRONYM	OFFSET
Port P1 input	P1IN	00h
Port P1 output	P1OUT	02h
Port P1 direction	P1DIR	04h
Port P1 pulling enable	P1REN	06h
Port P1 selection 0	P1SEL0	0Ah
Port P1 selection 1	P1SEL1	0Ch
Port P1 interrupt vector word	P1IV	0Eh
Port P1 complement selection	P1SELC	16h
Port P1 interrupt edge select	P1IES	18h
Port P1 interrupt enable	P1IE	1Ah
Port P1 interrupt flag	P1IFG	1Ch
Port P2 input	P2IN	01h
Port P2 output	P2OUT	03h
Port P2 direction	P2DIR	05h
Port P2 pulling enable	P2REN	07h
Port P2 selection 0	P2SEL0	0Bh
Port P2 selection 1	P2SEL1	0Dh
Port P2 interrupt vector word	P2IV	1Eh
Port P2 complement selection	P2SELC	17h
Port P2 interrupt edge select	P2IES	19h
Port P2 interrupt enable	P2IE	1Bh
Port P2 interrupt flag	P2IFG	1Dh

Copyright © 2018–2019, Texas Instruments Incorporated

表 6-42. Port P3, P4 Registers (Base Address: 0220h)

REGISTER DESCRIPTION	ACRONYM	OFFSET
Port P3 input	P3IN	00h
Port P3 output	P3OUT	02h
Port P3 direction	P3DIR	04h
Port P3 pulling enable	P3REN	06h
Port P3 selection 0	P3SEL0	0Ah
Port P3 selection 1	P3SEL1	0Ch
Port P3 interrupt vector word	P3IV	0Eh
Port P3 complement selection	P3SELC	16h
Port P3 interrupt edge select	P3IES	18h
Port P3 interrupt enable	P3IE	1Ah
Port P3 interrupt flag	P3IFG	1Ch
Port P4 input	P4IN	01h
Port P4 output	P4OUT	03h
Port P4 direction	P4DIR	05h
Port P4 pulling enable	P4REN	07h
Port P4 selection 0	P4SEL0	0Bh
Port P4 selection 1	P4SEL1	0Dh
Port P4 interrupt vector word	P4IV	1Eh
Port P4 complement selection	P4SELC	17h
Port P4 interrupt edge select	P4IES	19h
Port P4 interrupt enable	P4IE	1Bh
Port P4 interrupt flag	P4IFG	1Dh

表 6-43. Port P5, P6 Registers (Base Address: 0240h)

REGISTER DESCRIPTION	ACRONYM	OFFSET
Port P5 input	P5IN	00h
Port P5 output	P5OUT	02h
Port P5 direction	P5DIR	04h
Port P5 pulling enable	P5REN	06h
Port P5 selection 0	P5SEL0	0Ah
Port P5 selection 1	P5SEL1	0Ch
Port P5 complement selection	P5SELC	16h
Port P6 input	P6IN	01h
Port P6 output	P6OUT	03h
Port P6 direction	P6DIR	05h
Port P6 pulling enable	P6REN	07h
Port P6 selection 0	P6SEL0	0Bh
Port P6 selection 1	P6SEL1	0Dh
Port P6 complement selection	P6SELC	17h

表 6-44. RTC Registers (Base Address: 0300h)

REGISTER DESCRIPTION	ACRONYM	OFFSET
RTC control	RTCCTL	00h
RTC interrupt vector	RTCIV	04h
RTC modulo	RTCMOD	08h
RTC counter	RTCCNT	0Ch

Copyright © 2018–2019, Texas Instruments Incorporated

表 6-45. Timer0_B3 Registers (Base Address: 0380h)

REGISTER DESCRIPTION	ACRONYM	OFFSET
TB0 control	TB0CTL	00h
Capture/compare control 0	TB0CCTL0	02h
Capture/compare control 1	TB0CCTL1	04h
Capture/compare control 2	TB0CCTL2	06h
TB0 counter	TB0R	10h
Capture/compare 0	TB0CCR0	12h
Capture/compare 1	TB0CCR1	14h
Capture/compare 2	TB0CCR2	16h
TB0 expansion 0	TB0EX0	20h
TB0 interrupt vector	TB0IV	2Eh

表 6-46. Timer1_B3 Registers (Base Address: 03C0h)

REGISTER DESCRIPTION	ACRONYM	OFFSET
TB1 control	TB1CTL	00h
Capture/compare control 0	TB1CCTL0	02h
Capture/compare control 1	TB1CCTL1	04h
Capture/compare control 2	TB1CCTL2	06h
TB1 counter	TB1R	10h
Capture/compare 0	TB1CCR0	12h
Capture/compare 1	TB1CCR1	14h
Capture/compare 2	TB1CCR2	16h
TB1 expansion 0	TB1EX0	20h
TB1 interrupt vector	TB1IV	2Eh

表 6-47. Timer2_B3 Registers (Base Address: 0400h)

REGISTER DESCRIPTION	ACRONYM	OFFSET
TB2 control	TB2CTL	00h
Capture/compare control 0	TB2CCTL0	02h
Capture/compare control 1	TB2CCTL1	04h
Capture/compare control 2	TB2CCTL2	06h
TB2 counter	TB2R	10h
Capture/compare 0	TB2CCR0	12h
Capture/compare 1	TB2CCR1	14h
Capture/compare 2	TB2CCR2	16h
TB2 expansion 0	TB2EX0	20h
TB2 interrupt vector	TB2IV	2Eh

Copyright © 2018–2019, Texas Instruments Incorporated

表 6-48. Timer3_B7 Registers (Base Address: 0440h)

REGISTER DESCRIPTION	ACRONYM	OFFSET
TB3 control	TB3CTL	00h
Capture/compare control 0	TB3CCTL0	02h
Capture/compare control 1	TB3CCTL1	04h
Capture/compare control 2	TB3CCTL2	06h
Capture/compare control 3	TB3CCTL3	08h
Capture/compare control 4	TB3CCTL4	0Ah
Capture/compare control 5	TB3CCTL5	0Ch
Capture/compare control 6	TB3CCTL6	0Eh
TB3 counter	TB3R	10h
Capture/compare 0	TB3CCR0	12h
Capture/compare 1	TB3CCR1	14h
Capture/compare 2	TB3CCR2	16h
Capture/compare 3	TB3CCR3	18h
Capture/compare 4	TB3CCR4	1Ah
Capture/compare 5	TB3CCR5	1Ch
Capture/compare 6	TB3CCR6	1Eh
TB3 expansion 0	TB3EX0	20h
TB3 interrupt vector	TB3IV	2Eh

表 6-49. MPY32 Registers (Base Address: 04C0h)

REGISTER DESCRIPTION	ACRONYM	OFFSET
16-bit operand 1 – multiply	MPY	00h
16-bit operand 1 – signed multiply	MPYS	02h
16-bit operand 1 – multiply accumulate	MAC	04h
16-bit operand 1 – signed multiply accumulate	MACS	06h
16-bit operand 2	OP2	08h
16 × 16 result low word	RESLO	0Ah
16 × 16 result high word	RESHI	0Ch
16 × 16 sum extension	SUMEXT	0Eh
32-bit operand 1 – multiply low word	MPY32L	10h
32-bit operand 1 – multiply high word	MPY32H	12h
32-bit operand 1 – signed multiply low word	MPYS32L	14h
32-bit operand 1 – signed multiply high word	MPYS32H	16h
32-bit operand 1 – multiply accumulate low word	MAC32L	18h
32-bit operand 1 – multiply accumulate high word	MAC32H	1Ah
32-bit operand 1 – signed multiply accumulate low word	MACS32L	1Ch
32-bit operand 1 – signed multiply accumulate high word	MACS32H	1Eh
32-bit operand 2 – low word	OP2L	20h
32-bit operand 2 – high word	OP2H	22h
32 × 32 result 0 – least significant word	RES0	24h
32 × 32 result 1	RES1	26h
32 × 32 result 2	RES2	28h
32 × 32 result 3 – most significant word	RES3	2Ah
MPY32 control 0	MPY32CTL0	2Ch

Copyright © 2018–2019, Texas Instruments Incorporated

表 6-50. eUSCI_A0 Registers (Base Address: 0500h)

REGISTER DESCRIPTION	ACRONYM	OFFSET
eUSCI_A control word 0	UCA0CTLW0	00h
eUSCI_A control word 1	UCA0CTLW1	02h
eUSCI_A control rate 0	UCA0BR0	06h
eUSCI_A control rate 1	UCA0BR1	07h
eUSCI_A modulation control	UCA0MCTLW	08h
eUSCI_A status	UCA0STAT	0Ah
eUSCI_A receive buffer	UCA0RXBUF	0Ch
eUSCI_A transmit buffer	UCA0TXBUF	0Eh
eUSCI_A LIN control	UCA0ABCTL	10h
eUSCI_A IrDA transmit control	IUCA0IRTCTL	12h
eUSCI_A IrDA receive control	IUCA0IRRCTL	13h
eUSCI_A interrupt enable	UCA0IE	1Ah
eUSCI_A interrupt flags	UCA0IFG	1Ch
eUSCI_A interrupt vector word	UCA0IV	1Eh

表 6-51. eUSCI_B0 Registers (Base Address: 0540h)

REGISTER DESCRIPTION	ACRONYM	OFFSET
eUSCI_B control word 0	UCB0CTLW0	00h
eUSCI_B control word 1	UCB0CTLW1	02h
eUSCI_B bit rate 0	UCB0BR0	06h
eUSCI_B bit rate 1	UCB0BR1	07h
eUSCI_B status word	UCB0STATW	08h
eUSCI_B byte counter threshold	UCB0TBCNT	0Ah
eUSCI_B receive buffer	UCB0RXBUF	0Ch
eUSCI_B transmit buffer	UCB0TXBUF	0Eh
eUSCI_B I2C own address 0	UCB0I2COA0	14h
eUSCI_B I2C own address 1	UCB0I2COA1	16h
eUSCI_B I2C own address 2	UCB0I2COA2	18h
eUSCI_B I2C own address 3	UCB0I2COA3	1Ah
eUSCI_B receive address	UCB0ADDRX	1Ch
eUSCI_B address mask	UCB0ADDMASK	1Eh
eUSCI_B I2C slave address	UCB0I2CSA	20h
eUSCI_B interrupt enable	UCB0IE	2Ah
eUSCI_B interrupt flags	UCB0IFG	2Ch
eUSCI_B interrupt vector word	UCB0IV	2Eh

Copyright © 2018–2019, Texas Instruments Incorporated

表 6-52. eUSCI_A1 Registers (Base Address: 0580h)

REGISTER DESCRIPTION	ACRONYM	OFFSET
eUSCI_A control word 0	UCA1CTLW0	00h
eUSCI_A control word 1	UCA1CTLW1	02h
eUSCI_A control rate 0	UCA1BR0	06h
eUSCI_A control rate 1	UCA1BR1	07h
eUSCI_A modulation control	UCA1MCTLW	08h
eUSCI_A status	UCA1STAT	0Ah
eUSCI_A receive buffer	UCA1RXBUF	0Ch
eUSCI_A transmit buffer	UCA1TXBUF	0Eh
eUSCI_A LIN control	UCA1ABCTL	10h
eUSCI_A IrDA transmit control	lUCA1IRTCTL	12h
eUSCI_A IrDA receive control	lUCA1IRRCTL	13h
eUSCI_A interrupt enable	UCA1IE	1Ah
eUSCI_A interrupt flags	UCA1IFG	1Ch
eUSCI_A interrupt vector word	UCA1IV	1Eh

表 6-53. eUSCI_B1 Registers (Base Address: 05C0h)

REGISTER DESCRIPTION	ACRONYM	OFFSET
eUSCI_B control word 0	UCB1CTLW0	00h
eUSCI_B control word 1	UCB1CTLW1	02h
eUSCI_B bit rate 0	UCB1BR0	06h
eUSCI_B bit rate 1	UCB1BR1	07h
eUSCI_B status word	UCB1STATW	08h
eUSCI_B byte counter threshold	UCB1TBCNT	0Ah
eUSCI_B receive buffer	UCB1RXBUF	0Ch
eUSCI_B transmit buffer	UCB1TXBUF	0Eh
eUSCI_B I2C own address 0	UCB1I2COA0	14h
eUSCI_B I2C own address 1	UCB1I2COA1	16h
eUSCI_B I2C own address 2	UCB1I2COA2	18h
eUSCI_B I2C own address 3	UCB1I2COA3	1Ah
eUSCI_B receive address	UCB1ADDRX	1Ch
eUSCI_B address mask	UCB1ADDMASK	1Eh
eUSCI_B I2C slave address	UCB1I2CSA	20h
eUSCI_B interrupt enable	UCB1IE	2Ah
eUSCI_B interrupt flags	UCB1IFG	2Ch
eUSCI_B interrupt vector word	UCB1IV	2Eh

Copyright © 2018–2019, Texas Instruments Incorporated

表 6-54. Backup Memory Registers (Base Address: 0660h)

REGISTER DESCRIPTION	ACRONYM	OFFSET
Backup memory 0	BAKMEM0	00h
Backup memory 1	BAKMEM1	02h
Backup memory 2	BAKMEM2	04h
Backup memory 3	BAKMEM3	06h
Backup memory 4	BAKMEM4	08h
Backup memory 5	BAKMEM5	0Ah
Backup memory 6	BAKMEM6	0Ch
Backup memory 7	BAKMEM7	0Eh
Backup memory 8	BAKMEM8	10h
Backup memory 9	BAKMEM9	12h
Backup memory 10	BAKMEM10	14h
Backup memory 11	BAKMEM11	16h
Backup memory 12	BAKMEM12	18h
Backup memory 13	BAKMEM13	1Ah
Backup memory 14	BAKMEM14	1Ch
Backup memory 15	BAKMEM15	1Eh

表 6-55. ICC Registers (Base Address: 06C0h)

REGISTER DESCRIPTION	ACRONYM	OFFSET
ICC status and control	ICCSC	00h
ICC mask virtual stack	ICCMVS	02h
ICC interrupt level setting 0	ICCILSR0	04h
ICC interrupt level setting 1	ICCILSR1	06h
ICC interrupt level setting 2	ICCILSR2	08h
ICC interrupt level setting 3	ICCILSR3	0Ah

表 6-56. ADC Registers (Base Address: 0700h)

REGISTER DESCRIPTION	ACRONYM	OFFSET
ADC control 0	ADCCTL0	00h
ADC control 1	ADCCTL1	02h
ADC control 2	ADCCTL2	04h
ADC window comparator low threshold	ADCLO	06h
ADC window comparator high threshold	ADCHI	08h
ADC memory control 0	ADCMCTL0	0Ah
ADC conversion memory	ADCMEM0	12h
ADC interrupt enable	ADCIE	1Ah
ADC interrupt flags	ADCIFG	1Ch
ADC interrupt vector word	ADCIV	1Eh

Copyright © 2018–2019, Texas Instruments Incorporated

表 6-57. eCOMP0 Registers (Base Address: 08E0h)

REGISTER DESCRIPTION	ACRONYM	OFFSET
Comparator control 0	CP0CTL0	00h
Comparator control 1	CP0CTL1	02h
Comparator interrupt	CP0INT	06h
Comparator interrupt vector	CP0IV	08h
Comparator built-in DAC control	CP0DACCTL	10h
Comparator built-in DAC data	CP0DACDATA	12h

表 6-58. eCOMP1 Registers (Base Address: 0900h)

REGISTER DESCRIPTION	ACRONYM	OFFSET
Comparator control 0	CP1CTL0	00h
Comparator control 1	CP1CTL1	02h
Comparator interrupt	CP1INT	06h
Comparator interrupt vector	CP1IV	08h
Comparator built-in DAC control	CP1DACCTL	10h
Comparator built-in DAC data	CP1DACDATA	12h

表 6-59. SAC0 Registers (Base Address: 0C80h, MSP430FR235x Devices Only)

REGISTER DESCRIPTION	ACRONYM	OFFSET
SAC0 OA control	SAC0OA	00h
SAC0 PGA control	SAC0PGA	02h
SAC0 DAC control	SAC0DAC	04h
SAC0 DAC data	SAC0DAT	06h
SAC0 DAC status	SAC0DATSTS	08h
SAC0 interrupt vector	SAC0IV	0Ah

表 6-60. SAC1 Registers (Base Address: 0C90h, MSP430FR235x Devices Only)

REGISTER DESCRIPTION	ACRONYM	OFFSET
SAC1 OA control	SAC1OA	00h
SAC1 PGA control	SAC1PGA	02h
SAC1 DAC control	SAC1DAC	04h
SAC1 DAC data	SAC1DAT	06h
SAC1 DAC status	SAC1DATSTS	08h
SAC1 interrupt vector	SAC1IV	0Ah

表 6-61. SAC2 Registers (Base Address: 0CA0h, MSP430FR235x Devices Only)

REGISTER DESCRIPTION	ACRONYM	OFFSET
SAC2 OA control	SAC2OA	00h
SAC2 PGA control	SAC2PGA	02h
SAC2 DAC control	SAC2DAC	04h
SAC2 DAC data	SAC2DAT	06h
SAC2 DAC status	SAC2DATSTS	08h
SAC2 interrupt vector	SAC2IV	0Ah

Copyright © 2018–2019, Texas Instruments Incorporated

表 6-62. SAC3 Registers (Base Address: 0CB0h, MSP430FR235x Devices Only)

REGISTER DESCRIPTION	ACRONYM	OFFSET
SAC3 OA control	SAC3OA	00h
SAC3 PGA control	SAC3PGA	02h
SAC3 DAC control	SAC3DAC	04h
SAC3 DAC data	SAC3DAT	06h
SAC3 DAC status	SAC3DATSTS	08h
SAC3 interrupt vector	SAC3IV	0Ah

6.11 Input/Output Diagrams

6.11.1 Port P1 Input/Output With Schmitt Trigger

図 6-4 shows the port diagram. 表 6-63 summarizes the selection of the port function.

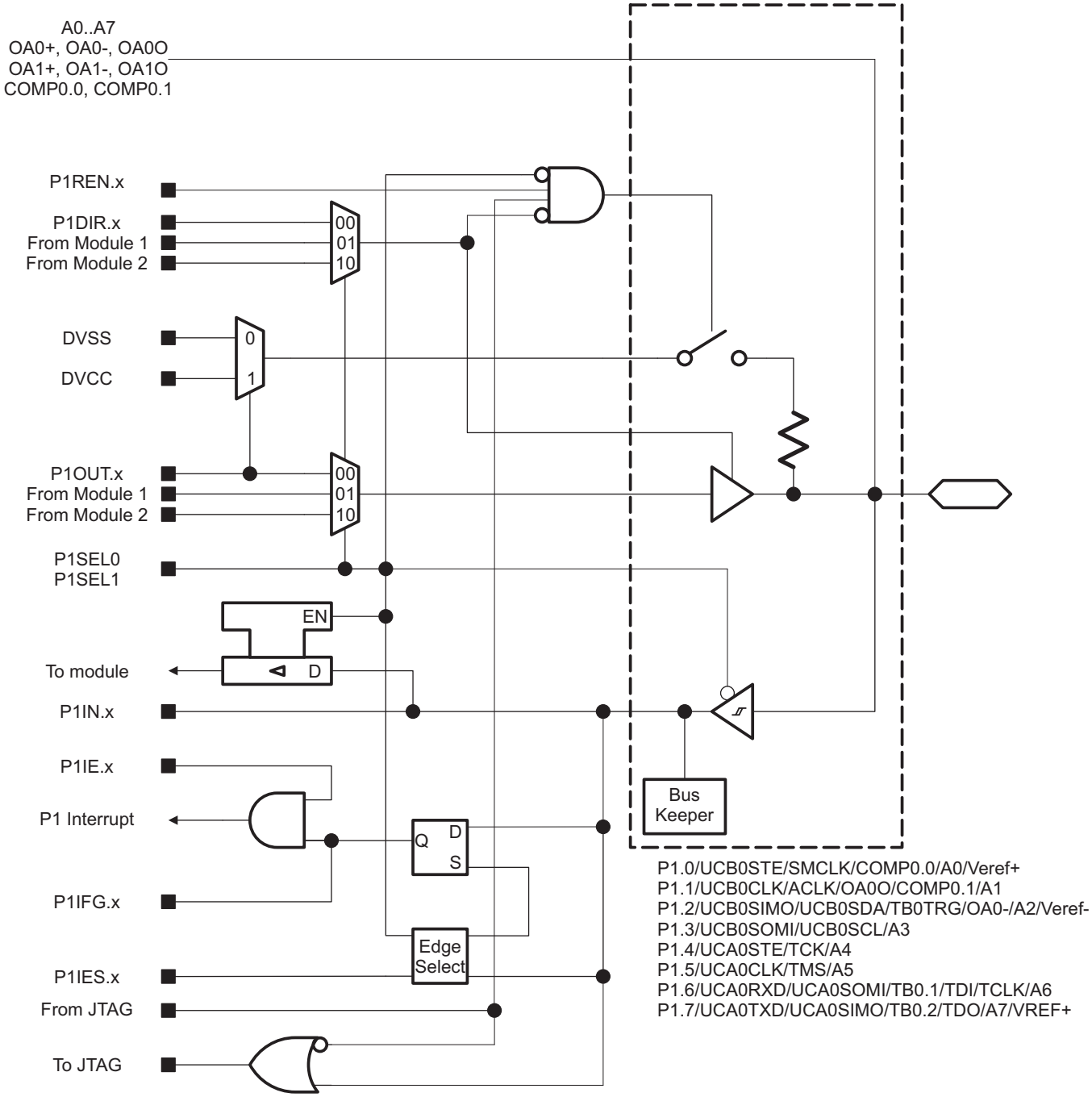

図 6-4. Port P1 Input/Output With Schmitt Trigger

Copyright © 2018–2019, Texas Instruments Incorporated

表 6-63. Port P1 Pin Functions

PIN NAME (P1.x)	x	FUNCTION	CONTROL BITS AND SIGNALS[1]		
			P1DIR.x	P1SELx	JTAG
P1.0/UCB0STE/SMCLK/ COMP0.0/A0/Veref+	0	P1.0 (I/O)	I: 0; O: 1	00	N/A
		UCB0STE	X	01	N/A
		SMCLK	1	10	N/A
		VSS	0		
		COMP0.0, A0/Veref+	X	11	N/A
P1.1/UCB0CLK/ACLK/ OA0O/COMP0.1/A1	1	P1.1 (I/O)	I: 0; O: 1	0	N/A
		UCB0CLK	X	01	N/A
		ACLK	1	10	N/A
		VSS	0		
		OA0O[2], COMP0.1, A1	X	11	N/A
P1.2/UCB0SIMO/ UCB0SDA/TB0TRG/ OA0-/A2/Veref-	2	P1.2 (I/O)	I: 0; O: 1	00	N/A
		UCB0SIMO/UCB0SDA	X	01	N/A
		TB0TRG	0	10	N/A
		OA0-[2], A2/Veref-	X	11	N/A
P1.3/UCB0SOMI/ UCB0SCL/OA0+/A3	3	P1.3 (I/O)	I: 0; O: 1	00	N/A
		UCB0SOMI/UCB0SCL	X	01	N/A
		OA0+[2], A3	X	11	N/A
P1.4/UCA0STE/TCK/A4	4	P1.4 (I/O)	I: 0; O: 1	00	Disabled
		UCA0STE	X	01	Disabled
		A4	X	11	Disabled
		JTAG TCK	X	X	TCK
P1.5/UCA0CLK/TMS/ OA1O/A5	5	P1.5 (I/O)	I: 0; O: 1	00	Disabled
		UCA0CLK	X	01	Disabled
		OA1O[2], A5	X	11	Disabled
		JTAG TMS	X	X	TMS
P1.6/UCA0RXD/ UCA0SOMI/TB0.1/TDI/ TCLK/OA1-/A6	6	P1.6 (I/O)	I: 0; O: 1	00	Disabled
		UCA0RXD/UCA0SOMI	X	01	Disabled
		TB0.CCI1A	0	10	Disabled
		TB0.1	1		
		OA1-[2], A6	X	11	Disabled
		JTAG TDI/TCLK	X	X	TDI/TCLK
P1.7/UCA0TXD/ UCA0SIMO/TB0.2/TDO/ OA1+/A7/VREF+	7	P1.7 (I/O)	I: 0; O: 1	00	Disabled
		UCA0TXD/UCA0SIMO	X	01	Disabled
		TB0.CCI2A	0	10	Disabled
		TB0.2	1		
		OA1+[2], A7, VREF+	X	11	Disabled
		JTAG TDO	X	X	TDO

(1) X = don't care
(2) MSP430FR235x devices only

6.11.2 Port P2 Input/Output With Schmitt Trigger

図 6-5 shows the port diagram. 表 6-64 summarizes the selection of the port function.

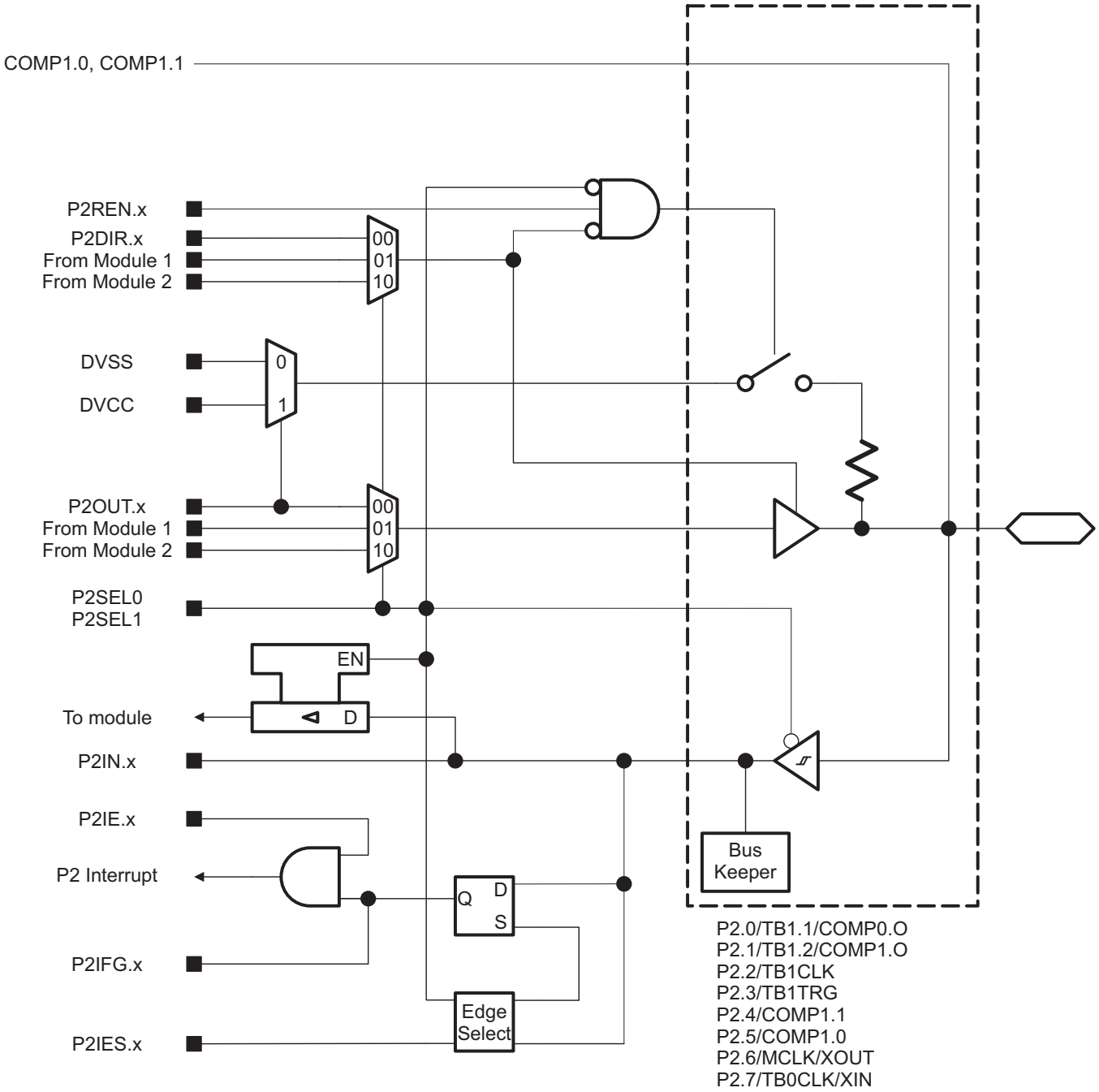

図 6-5. Port P2 Input/Output With Schmitt Trigger

Copyright © 2018–2019, Texas Instruments Incorporated

表 6-64. Port P2 Pin Functions

PIN NAME (P2.x)	x	FUNCTION	CONTROL BITS AND SIGNALS[1]	
			P2DIR.x	P2SELx
P2.0/TB1.1/COMP0.O	0	P2.0 (I/O)	I: 0; O: 1	00
		TB1.CCI1A	0	01
		TB1.1	1	
		COMP0.O	1	10
P2.1/TB1.2	1	P2.1 (I/O)0	I: 0; O: 1	00
		TB1.CCI2A	0	01
		TB1.2	1	
		COMP1.O	1	10
P2.2/TB1CLK	2	P2.2 (I/O)	I: 0; O: 1	00
		TB1CLK	0	01
P2.3/UCB0CLK/TB1TRG	3	P2.3 (I/O)	I: 0; O: 1	00
		TB1TRG	0	01
		VSS	1	
P2.4/COMP1.1	4	P2.4 (I/O)	I: 0; O: 1	00
		COMP1.1	X	11
P2.5/COMP1.0	5	P2.5 (I/O)	I: 0; O: 1	00
		COMP1.0	X	11
P2.6/MCLK/XOUT	6	P2.6 (I/O)	I: 0; O: 1	00
		MCLK	1	01
		VSS	0	
		XOUT	X	10
P2.7/TB0CLK/XIN	7	P2.7 (I/O)	I: 0; O: 1	00
		TB0CLK	0	01
		VSS	1	
		XIN	X	10

(1) X = don't care

6.11.3 Port P3 Input/Output With Schmitt Trigger

図 6-6 shows the port diagram. 表 6-65 summarizes the selection of the port function.

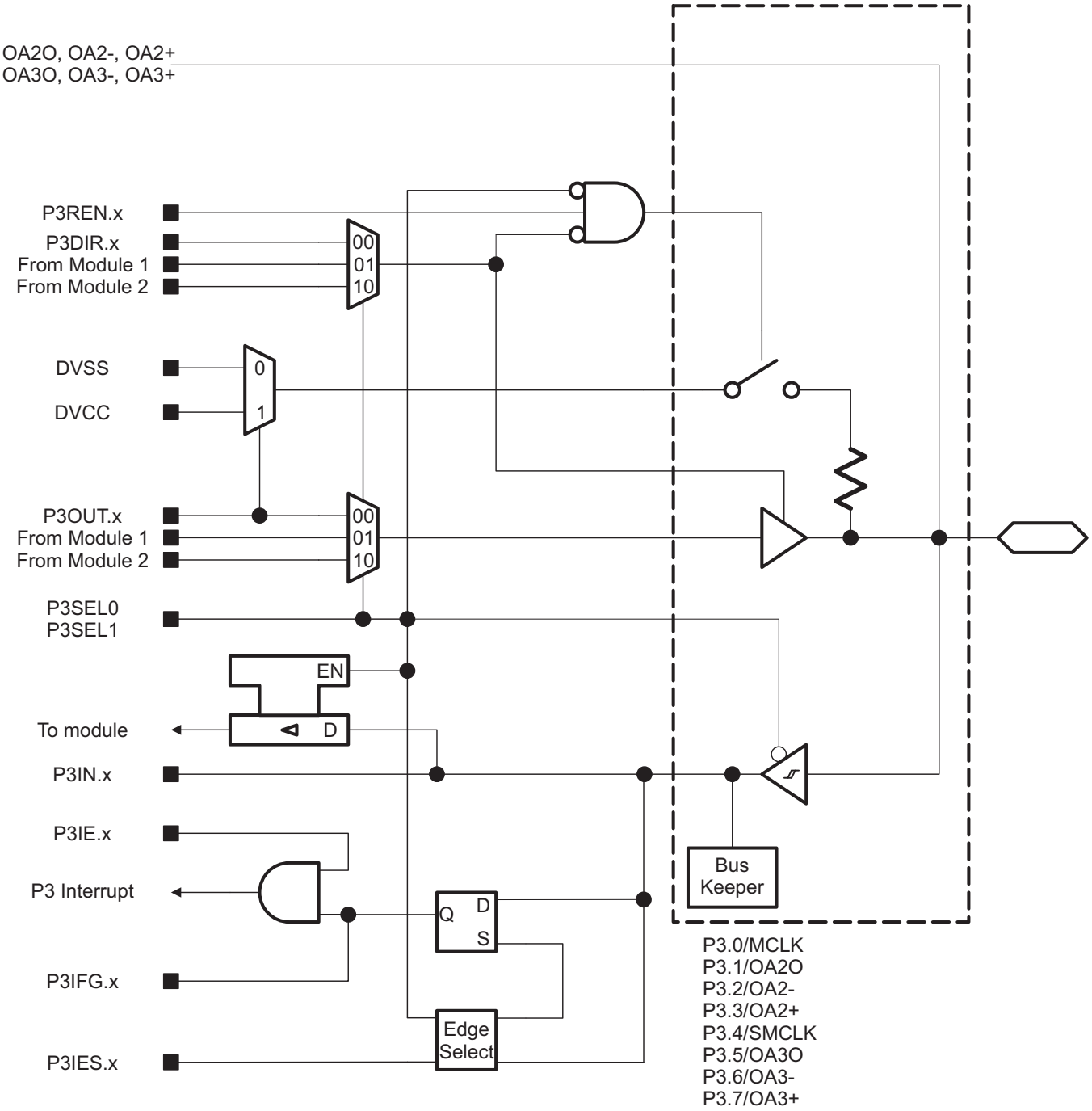

図 6-6. Port P3 Input/Output With Schmitt Trigger

Copyright © 2018–2019, Texas Instruments Incorporated

表 6-65. Port P3 Pin Functions

PIN NAME (P3.x)	x	FUNCTION	CONTROL BITS AND SIGNALS[1]	
			P3DIR.x	P3SELx
P3.0/MCLK	0	P3.0 (I/O)	I: 0; O: 1	00
		MCLK	1	01
		VSS	0	
P3.1/OA2O	1	P3.1 (I/O)	I: 0; O: 1	00
		OA2O[2]	X	11
P3.2/OA2-	2	P3.2 (I/O)	I: 0; O: 1	00
		OA2-[2]	X	11
P3.3/OA2+	3	P3.3 (I/O)	I: 0; O: 1	00
		OA2+[2]	X	11
P3.4/SMCLK	4	P3.4 (I/O)	I: 0; O: 1	00
		SMCLK	1	01
		VSS	0	
P3.5/OA3O	5	P3.5 (I/O)	I: 0; O: 1	00
		OA3O[2]	X	11
P3.6/OA3-	6	P3.6 (I/O)	I: 0; O: 1	00
		OA3-[2]	X	11
P3.7/OA3+	7	P3.7 (I/O)	I: 0; O: 1	00
		OA3+[2]	X	11

(1) X = don't care
(2) MSP430FR235x devices only

6.11.4 Port P4 Input/Output With Schmitt Trigger

図 6-7 shows the port diagram. 表 6-66 summarizes the selection of the port function.

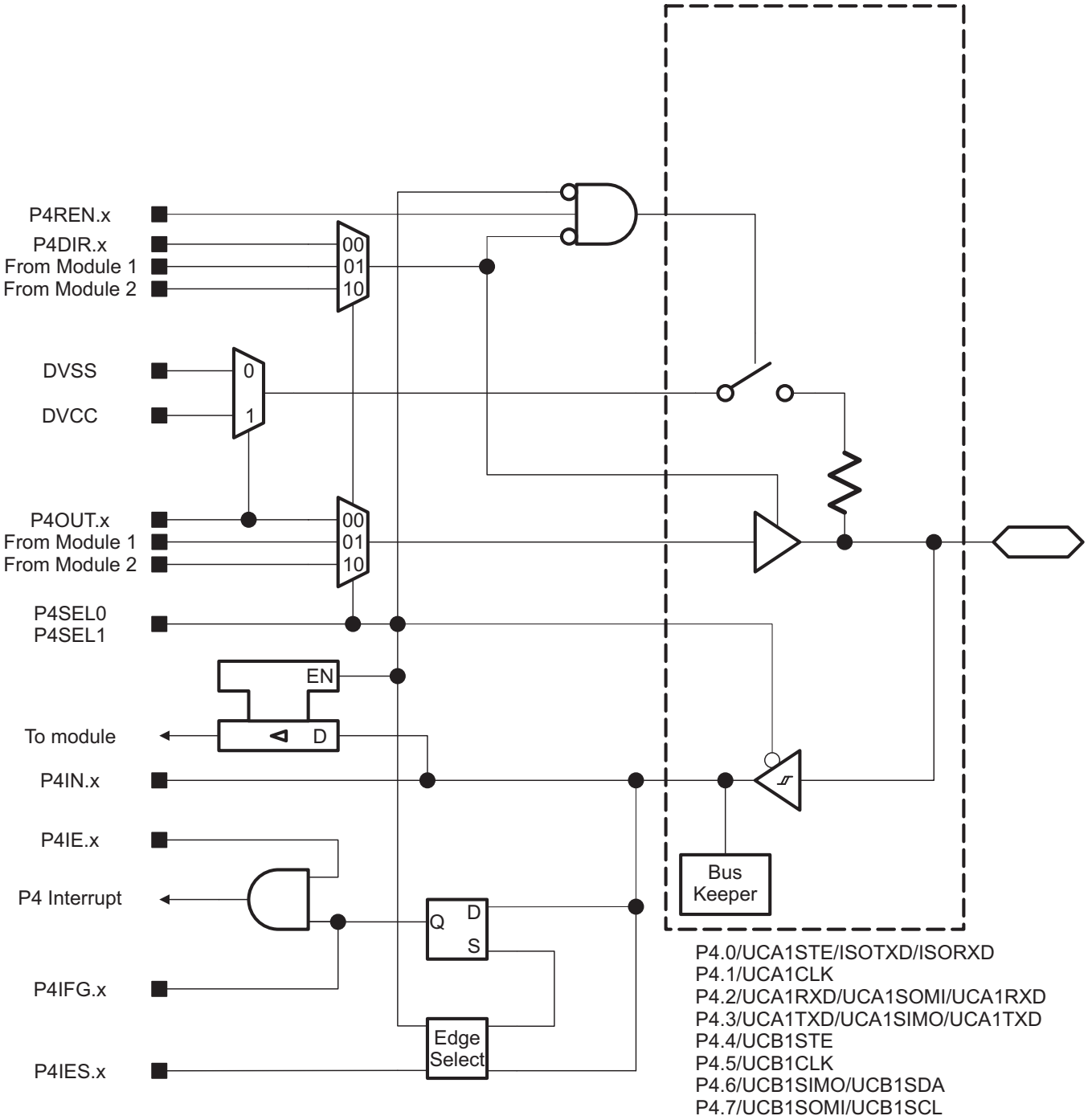

図 6-7. Port P4 Input/Output With Schmitt Trigger

Copyright © 2018–2019, Texas Instruments Incorporated

表 6-66. Port P4 Pin Functions

PIN NAME (P4.x)	x	FUNCTION	CONTROL BITS AND SIGNALS[1]	
			P4DIR.x	P4SELx
P4.0/UCA1STE	0	P4.0 (I/O)	I: 0; O: 1	00
		UCA1STE	X	01
		UCA1RXD, TB3.CCI2B	0	10
		UCA1TXD logic-AND TB3.2B	1	
P4.1/UCA1CLK	1	P4.1 (I/O)	I: 0; O: 1	00
		UCA1CLK	X	01
P4.2/UCA1RXD/ UCA1SOMI/$\overline{\text{UCA1RXD}}$	2	P4.2 (I/O)	I: 0; O: 1	00
		UCA1RXD/UCA1SOMI	X	01
		$\overline{\text{UCA1RXD}}$	X	10
P4.3/UCA1TXD/ UCA1SIMO/$\overline{\text{UCA1TXD}}$	3	P4.3 (I/O)	I: 0; O: 1	00
		UCA1TXD/UCA1SIMO	X	01
		$\overline{\text{UCA1TXD}}$	X	10
P4.4/UCB1STE	4	P4.4 (I/O)	I: 0; O: 1	00
		UCB1STE	X	01
P4.5/UCB1CLK	5	P4.5 (I/O)	I: 0; O: 1	00
		UCB1CLK	X	01
P4.6/UCB1SIMO/UCB1SDA	6	P4.6 (I/O)	I: 0; O: 1	00
		UCB1SIMO/UCB1SDA	X	01
P4.7/UCB1SOMI/UCB1SCL	7	P4.7 (I/O)	I: 0; O: 1	00
		UCB1SOMI/UCB1SCL	X	01

(1) X = don't care

6.11.5 Port P5 Input/Output With Schmitt Trigger

図 6-8 shows the port diagram. 表 6-67 summarizes the selection of the port function.

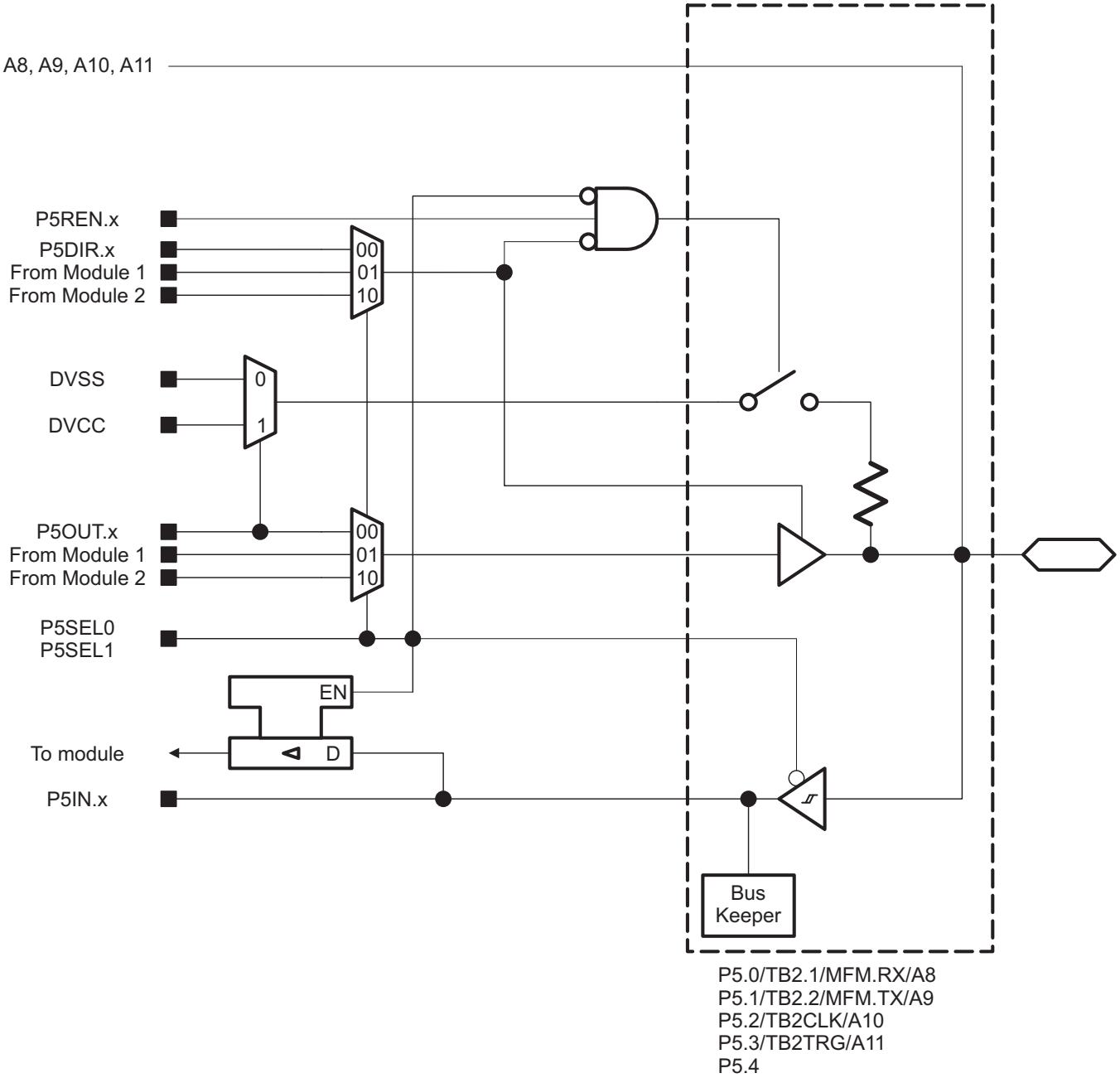

図 6-8. Port P5 Input/Output With Schmitt Trigger

Copyright © 2018–2019, Texas Instruments Incorporated

表 6-67. Port P5 Pin Functions

PIN NAME (P5.x)	x	FUNCTION	CONTROL BITS AND SIGNALS(1)	
			P5DIR.x	P5SELx
P5.0/TB2.1/MFM.RX/A8	0	P5.0 (I/O)	I: 0; O: 1	00
		TB2.CCI1A	I	01
		TB2.1	O	
		MFM.RX	X	10
		A8	X	11
P5.1/TB2.2/MFM.TX/A9	1	P5.1 (I/O)	I: 0; O: 1	00
		TB2.CCI2A	I	01
		TB2.2	O	
		MFM.TX	X	10
		A9	X	11
P5.2/TB2CLK/A10	2	P5.2 (I/O)	I: 0; O: 1	00
		TB2CLK	I	01
		VSS	O	
		A10	X	11
P5.3/TB2TRG/A11	3	P5.3 (I/O)	I: 0; O: 1	00
		TB2TRG	I	01
		VSS	O	
		A11	X	11
P5.4	4	P5.4 (I/O)	I: 0; O: 1	00

(1) X = don't care

6.11.6 Port P6 Input/Output With Schmitt Trigger

図 6-9 shows the port diagram. 表 6-68 summarizes the selection of the port function.

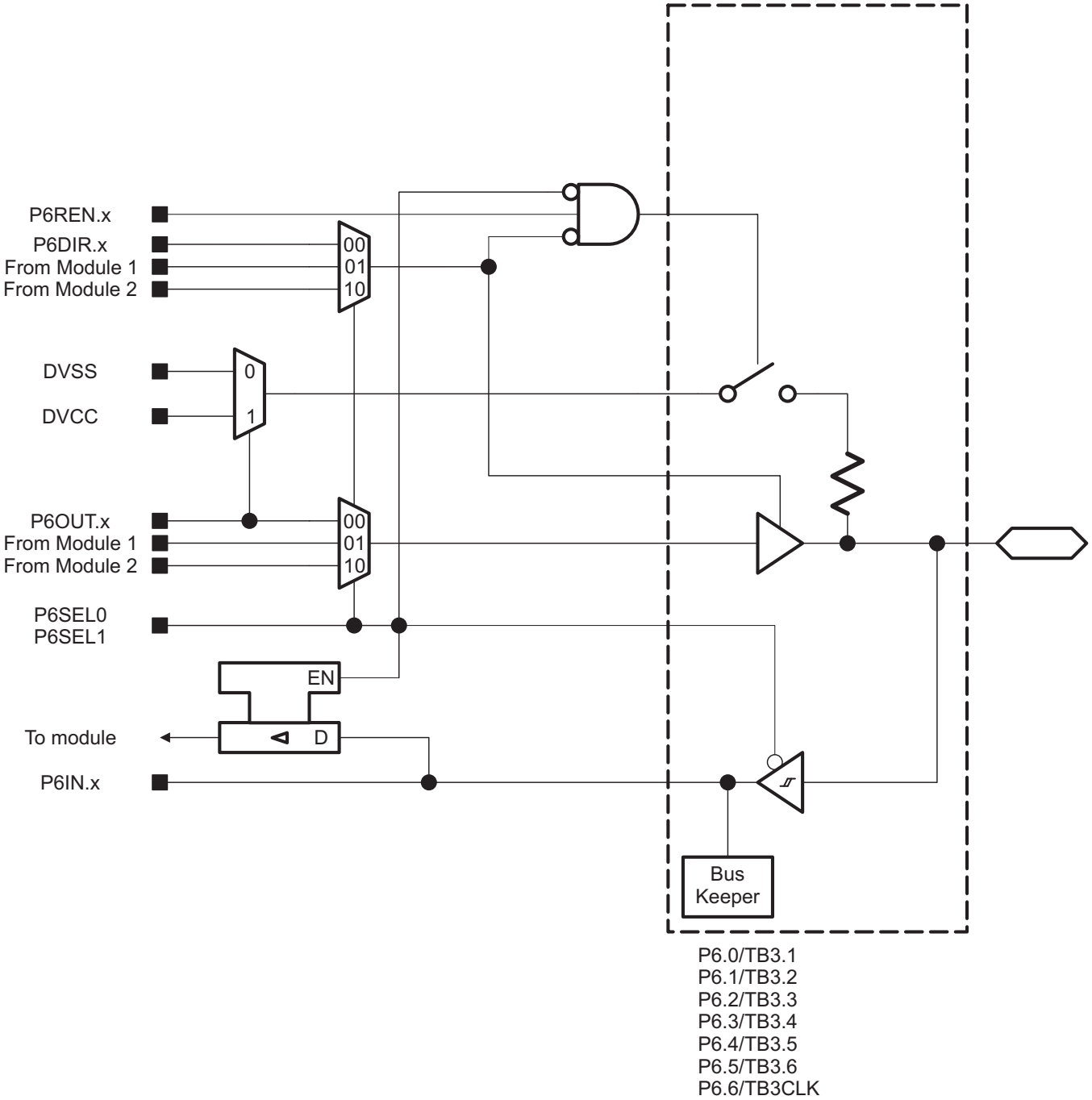

図 6-9. Port P6 Input/Output With Schmitt Trigger

Copyright © 2018–2019, Texas Instruments Incorporated

表 6-68. Port P6 Pin Functions

PIN NAME (P6.x)	x	FUNCTION	CONTROL BITS AND SIGNALS(1)	
			P6DIR.x	P6SELx
P6.0/TB3.1	0	P6.0 (I/O)	I: 0; O: 1	00
		TB3.CCI1A	0	01
		TB3.1	1	
P6.1/TB3.2	1	P6.1 (I/O)	I: 0; O: 1	00
		TB3.CCI2A	0	01
		TB3.2	1	
P6.2/TB3.3	2	P6.2 (I/O)	I: 0; O: 1	00
		TB3.CCI3A	0	01
		TB3.3	1	
P6.3/TB3.4	3	P6.3 (I/O)	I: 0; O: 1	00
		TB3.CCI4A	0	01
		TB3.4	1	
P6.4/TB3.5	4	P6.4 (I/O)	I: 0; O: 1	00
		TB3.CCI5A	0	01
		TB3.5	1	
P6.5/TB3.6	5	P6.5 (I/O)	I: 0; O: 1	00
		TB3.CCI6A	0	01
		TB3.6	1	
P6.6/TB3CLK	6	P6.6 (I/O)	I: 0; O: 1	00
		TB3CLK	0	01
		VSS	1	

(1) X = don't care

6.12 Device Descriptors (TLV)

表 6-69 lists the Device IDs. 表 6-70 lists the contents of the device descriptor tag-length-value (TLV) structure.

表 6-69. Device IDs

DEVICE	DEVICE ID	
	1A04h	1A05h
MSP430FR2355	0C	83
MSP430FR2353	0D	83
MSP430FR2155	1E	83
MSP430FR2153	1D	83

表 6-70. Device Descriptors

DESCRIPTION		ADDRESS	VALUE
Information block	Info length	1A00h	06h
	CRC length	1A01h	06h
	CRC value (1)	1A02h	Per unit
		1A03h	Per unit
	Device ID	1A04h	See (2)
		1A05h	
	Hardware revision	1A06h	Per unit
	Firmware revision	1A07h	Per unit
Die record	Die record tag	1A08h	08h
	Die record length	1A09h	0Ah
	Lot wafer ID	1A0Ah	Per unit
		1A0Bh	Per unit
		1A0Ch	Per unit
		1A0Dh	Per unit
	Die X position	1A0Eh	Per unit
		1A0Fh	Per unit
	Die Y position	1A10h	Per unit
		1A11h	Per unit
	Test result	1A12h	Per unit
		1A13h	Per unit

(1) CRC value covers the checksum from 0x1A04h to 0x1AF7h by applying CRC-CCITT-16 polynomial of $x^{16} + x^{12} + x^5 + 1$
(2) MSP430FR235x devices only

Copyright © 2018–2019, Texas Instruments Incorporated

表 6-70. Device Descriptors (continued)

DESCRIPTION		ADDRESS	VALUE
ADC calibration	ADC calibration tag	1A14h	11h
	ADC calibration length	1A15h	10h
	ADC gain factor	1A16h	Per unit
		1A17h	Per unit
	ADC offset	1A18h	Per unit
		1A19h	Per unit
	ADC internal shared 1.5-V reference, temperature 30°C	1A1Ah	Per unit
		1A1Bh	Per unit
	ADC internal shared 1.5-V reference, high temperature (3)	1A1Ch	Per unit
		1A1Dh	Per unit
	ADC internal shared 2.0-V reference, temperature 30°C	1A1Eh	Per unit
		1A1Fh	Per unit
	ADC internal shared 2.0-V reference, high temperature (3)	1A20h	Per unit
		1A21h	Per unit
	ADC internal shared 2.5-V reference, temperature 30°C	1A22h	Per unit
		1A23h	Per unit
	ADC internal shared 2.5-V reference, high temperature (3)	1A24h	Per unit
		1A25h	Per unit
Reference and DCO calibration	Calibration tag	1A26h	12h
	Calibration length	1A27h	0Ah
	Internal shared 1.5-V reference factor	1A28h	Per unit
		1A29h	Per unit
	Internal shared 2.0-V reference factor	1A2Ah	Per unit
		1A2Bh	Per unit
	Internal shared 2.5-V reference factor	1A2Ch	Per unit
		1A2Dh	Per unit
	DCO tap settings for 16 MHz, temperature 30°C	1A2Eh	Per unit
		1A2Fh	Per unit
	DCO tap settings for 24 MHz, temperature 30°C (4)	1A30h	Per unit
		1A31h	Per unit

(3) The calibration value is device dependent at 105°C.
(4) This value can be directly loaded into the DCO bits in the CSCTL0 register to get an accurate 24-MHz frequency at room temperature, especially when MCU exits from LPM3 and below. TI also suggests to use a predivider to decrease the frequency if the temperature drift might result an overshoot faster than 24 MHz.

6.13 Identification

6.13.1 Revision Identification

The device revision information is shown as part of the top-side marking on the device package. The device-specific errata sheet describes these markings. For links to all of the errata sheets for the devices in this data sheet, see 8.4.

The hardware revision is also stored in the Device Descriptor structure in the Info Block section. For details on this value, see the "Hardware Revision" entries in 6.12.

6.13.2 Device Identification

The device type can be identified from the top-side marking on the device package. The device-specific errata sheet describes these markings. For links to all of the errata sheets for the devices in this data sheet, see 8.4.

A device identification value is also stored in the Device Descriptor structure in the Info Block section. For details on this value, see the "Device ID" entries in 6.12.

6.13.3 JTAG Identification

Programming through the JTAG interface, including reading and identifying the JTAG ID, is described in detail in the *MSP430 Programming With the JTAG Interface*.

Copyright © 2018–2019, Texas Instruments Incorporated

7 Applications, Implementation, and Layout

注: Information in the following applications sections is not part of the TI component specification, and TI does not warrant its accuracy or completeness. TI's customers are responsible for determining suitability of components for their purposes. Customers should validate and test their implementation to confirm system functionality.

7.1 Device Connection and Layout Fundamentals

This section discusses the recommended guidelines when designing with the MSP430 MCU. These guidelines are to make sure that the device has proper connections for powering, programming, debugging, and optimum analog performance.

7.1.1 Power Supply Decoupling and Bulk Capacitors

It is recommended to connect a combination of a 10-µF plus a 100-nF low-ESR ceramic decoupling capacitor to the DVCC pin. Higher-value capacitors can be used but can impact supply rail ramp-up time. Place the decoupling capacitors as close as possible to the pins that they decouple (within a few millimeters).

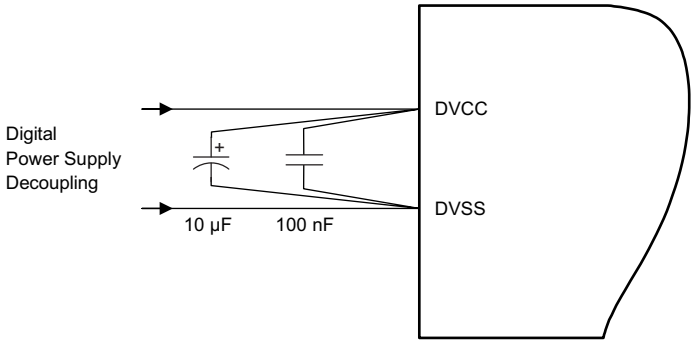

図 7-1. Power Supply Decoupling

7.1.2 External Oscillator

Depending on the device variant (see 3), the device can support a low-frequency crystal (32 kHz) on the LFXT pins, a high-frequency crystal on the HFXT pins, or both. External bypass capacitors for the crystal oscillator pins are required.

It is also possible to apply digital clock signals to the LFXIN and HFXIN input pins that meet the specifications of the respective oscillator if the appropriate LFXTBYPASS or HFXTBYPASS mode is selected. In this case, the associated LFXOUT and HFXOUT pins can be used for other purposes. If they are left unused, they must be terminated according to 4.6.

図 7-2 shows a typical connection diagram.

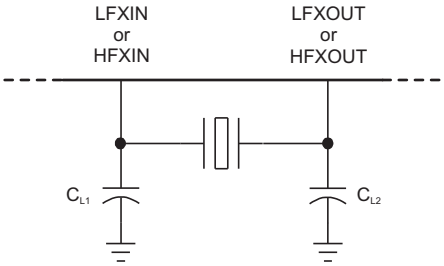

図 7-2. Typical Crystal Connection

See *MSP430 32-kHz Crystal Oscillators* for more information on selecting, testing, and designing a crystal oscillator with MSP430 MCUs.

7.1.3 JTAG

With the proper connections, the debugger and a hardware JTAG interface (such as the MSP-FET or MSP-FET430UIF) can be used to program and debug code on the target board. In addition, the connections also support the MSP-GANG production programmers, thus providing an easy way to program prototype boards, if desired. 図 7-3 shows the connections between the 14-pin JTAG connector and the target device required to support in-system programming and debugging for 4-wire JTAG communication. 図 7-4 shows the connections for 2-wire JTAG mode (Spy-Bi-Wire).

The connections for the MSP-FET and MSP-FET430UIF interface modules and the MSP-GANG are identical. Both can supply V_{CC} to the target board (through pin 2). In addition, the MSP-FET and MSP-FET430UIF interface modules and MSP-GANG have a V_{CC} sense feature that, if used, requires an alternate connection (pin 4 instead of pin 2). The VCC-sense feature senses the local V_{CC} present on the target board (that is, a battery or other local power supply) and adjusts the output signals accordingly. 図 7-3 and 図 7-4 show a jumper block that supports both scenarios of supplying V_{CC} to the target board. If this flexibility is not required, the desired V_{CC} connections can be hard-wired to eliminate the jumper block. Pins 2 and 4 must not be connected at the same time.

For additional design information regarding the JTAG interface, see the MSP430 hardware tools user's guide.

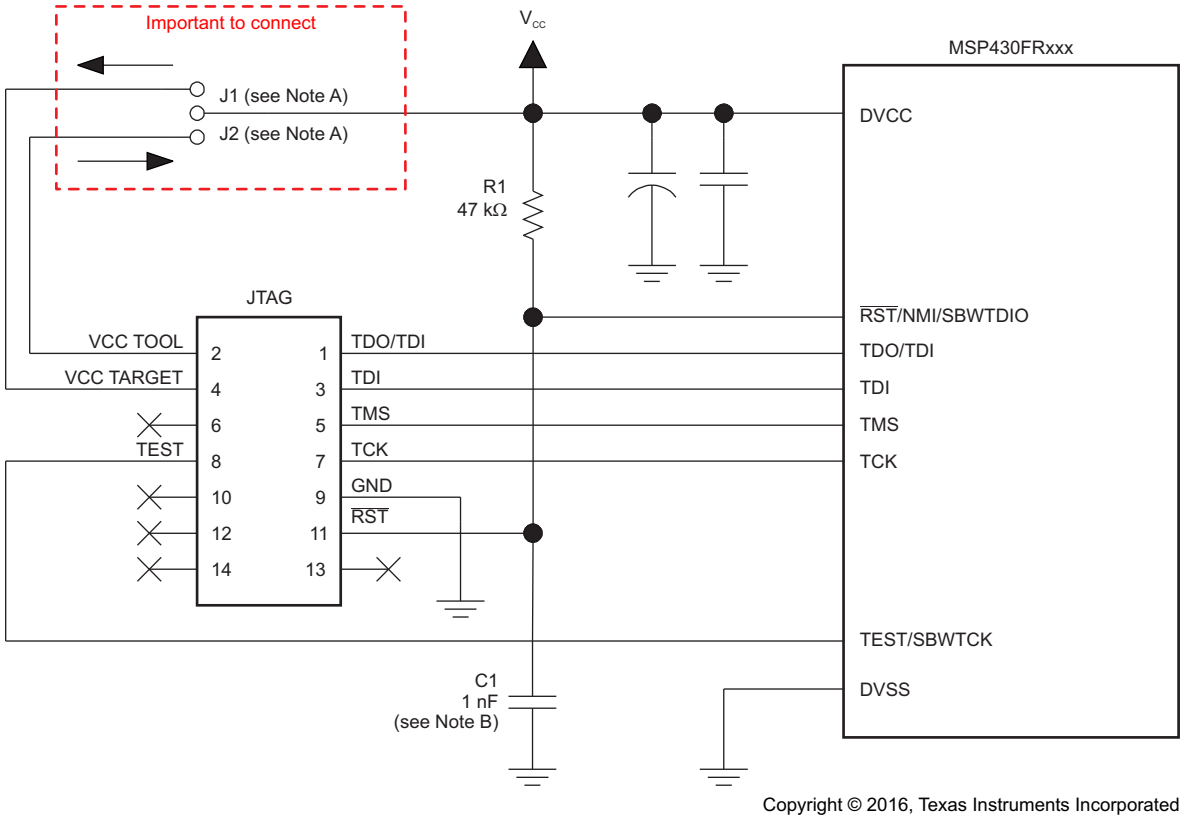

Copyright © 2016, Texas Instruments Incorporated

A. If a local target power supply is used, make connection J1. If power from the debug or programming adapter is used, make connection J2.

B. The upper limit for C1 is 1.1 nF when using current TI tools.

図 7-3. Signal Connections for 4-Wire JTAG Communication

Copyright © 2018–2019, Texas Instruments Incorporated

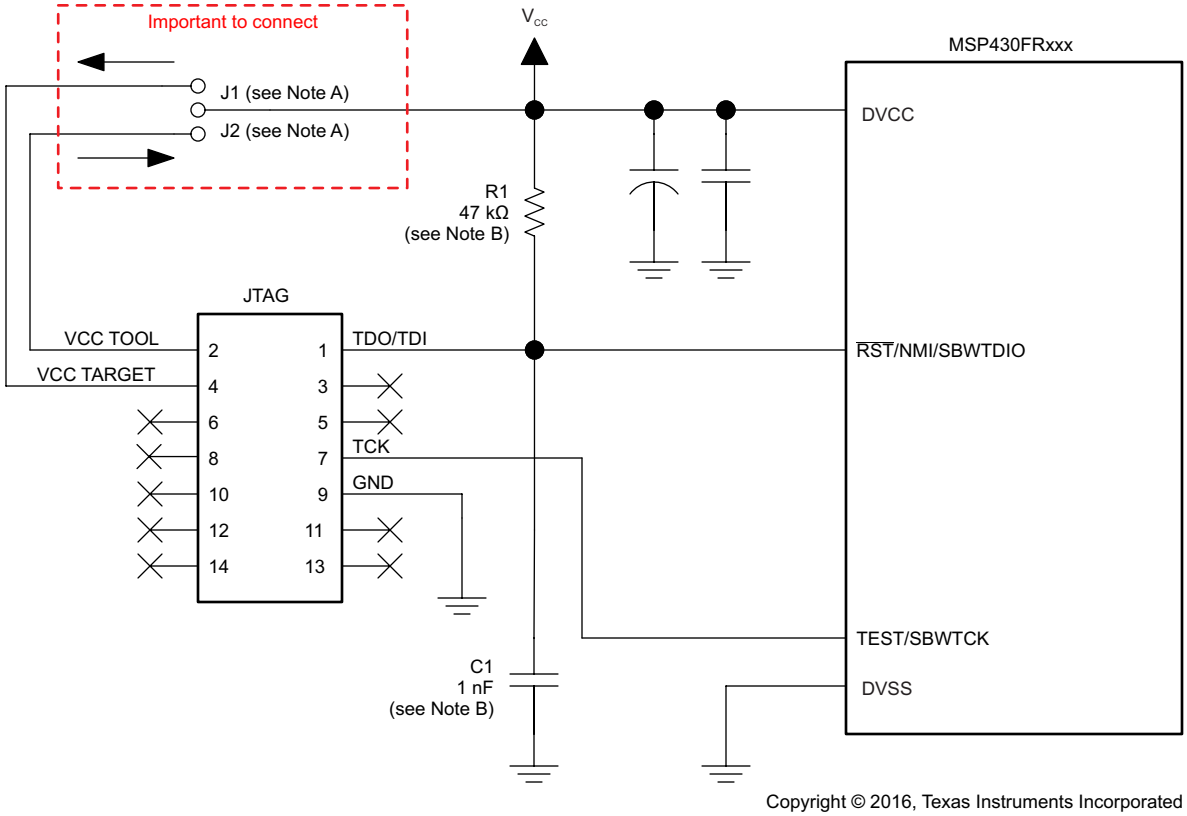

A. Make connection J1 if a local target power supply is used, or make connection J2 if the target is powered from the debug or programming adapter.

B. The device $\overline{\text{RST}}$/NMI/SBWTDIO pin is used in 2-wire mode for bidirectional communication with the device during JTAG access, and any capacitance that is attached to this signal can affect the ability to establish a connection with the device. The upper limit for C1 is 1.1 nF when using current TI tools.

図 7-4. Signal Connections for 2-Wire JTAG Communication (Spy-Bi-Wire)

7.1.4 Reset

The reset pin can be configured as a reset function (default) or as an NMI function in the special function register (SFR), SFRRPCR.

In reset mode, the $\overline{\text{RST}}$/NMI pin is active low, and a pulse applied to this pin that meets the reset timing specifications generates a BOR-type device reset.

Setting SYSNMI causes the $\overline{\text{RST}}$/NMI pin to be configured as an external NMI source. The external NMI is edge sensitive, and its edge is selectable by SYSNMIIES. Setting the NMIIE enables the interrupt of the external NMI. When an external NMI event occurs, the NMIIFG is set.

The $\overline{\text{RST}}$/NMI pin can have either a pullup or pulldown that is enabled or not. SYSRSTUP selects either pullup or pulldown, and SYSRSTRE causes the pullup (default) or pulldown to be enabled (default) or not. If the $\overline{\text{RST}}$/NMI pin is unused, it is required either to select and enable the internal pullup or to connect an external 47-kΩ pullup resistor to the $\overline{\text{RST}}$/NMI pin with a 2.2-nF pulldown capacitor. The pulldown capacitor should not exceed 1.1 nF when using devices with Spy-Bi-Wire interface in Spy-Bi-Wire mode or in 4-wire JTAG mode with TI tools like FET interfaces or GANG programmers.

See the *MSP430FR4xx and MSP430FR2xx Family User's Guide* for more information on the referenced control registers and bits.

7.1.5 Unused Pins

For details on the connection of unused pins, see 4.6.

7.1.6 General Layout Recommendations

- Proper grounding and short traces for external crystal to reduce parasitic capacitance. See *MSP430 32-kHz Crystal Oscillators* for recommended layout guidelines.
- Proper bypass capacitors on DVCC, AVCC, and reference pins if used.
- Avoid routing any high-frequency signal close to an analog signal line. For example, keep digital switching signals such as PWM or JTAG signals away from the oscillator circuit and ADC signals.
- Proper ESD level protection should be considered to protect the device from unintended high-voltage electrostatic discharge. See *MSP430 System-Level ESD Considerations* for guidelines.

7.1.7 Do's and Don'ts

During power up, power down, and device operation, the voltage difference between AVCC and DVCC must not exceed the limits specified in the Absolute Maximum Ratings section. Exceeding the specified limits can cause malfunction of the device including erroneous writes to RAM and FRAM.

7.2 Peripheral- and Interface-Specific Design Information

7.2.1 ADC Peripheral

7.2.1.1 Partial Schematic

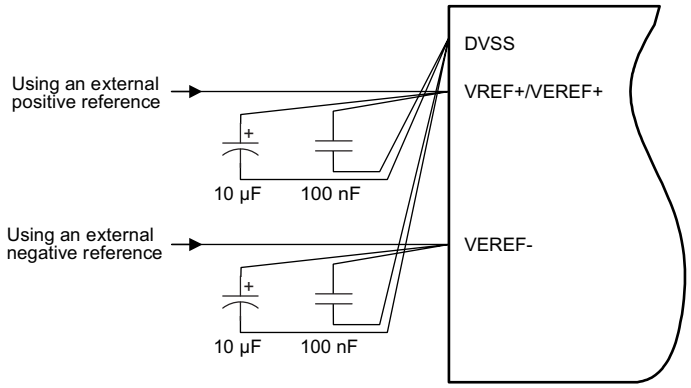

図 7-5. ADC Grounding and Noise Considerations

7.2.1.2 Design Requirements

As with any high-resolution ADC, appropriate printed-circuit-board layout and grounding techniques should be followed to eliminate ground loops, unwanted parasitic effects, and noise.

Ground loops are formed when return current from the ADC flows through paths that are common with other analog or digital circuitry. This current can generate small unwanted offset voltages that can add to or subtract from the reference or input voltages of the ADC. The general guidelines in 7.1.1 combined with the connections shown in 図 7-5 prevent these offset voltages.

In addition to grounding, ripple and noise spikes on the power-supply lines that are caused by digital switching or switching power supplies can corrupt the conversion result. TI recommends a noise-free design using separate analog and digital ground planes with a single-point connection to achieve high accuracy.

図 7-5 shows the recommended decoupling circuit when an external voltage reference is used. The internal reference module has a maximum drive current as described in the sections *ADC Pin Enable* and *1.2-V Reference Settings* of the *MSP430FR4xx and MSP430FR2xx Family User's Guide*.

The reference voltage must be a stable voltage for accurate measurements. The capacitor values that are selected in the general guidelines filter out the high- and low-frequency ripple before the reference voltage enters the device. In this case, the 10-µF capacitor buffers the reference pin and filters low-frequency ripple, and the 100-nF bypass capacitor filters high-frequency noise.

Copyright © 2018–2019, Texas Instruments Incorporated

7.2.1.3 Layout Guidelines

Components that are shown in the partial schematic (see 図 7-5) should be placed as close as possible to the respective device pins to avoid long traces, because they add additional parasitic capacitance, inductance, and resistance on the signal.

Avoid routing analog input signals close to a high-frequency pin (for example, a high-frequency PWM), because the high-frequency switching can be coupled into the analog signal.

7.3 ROM Libraries

The MSP430FR235x and MSP430FR215x devices in the MSP430FR4xx family have MSP430 Driver Library and FFT Library in ROM.

MSP430 software libraries in ROM are tested to work with both Code Composer Studio and IAR Embedded Workbench toolchains.

- For the ROM image to be compatible between CCS and IAR tool chains, there are certain project properties restrictions. See the TI.com attribute guide for more details.
- To use DriverLib in ROM, #include "rom_driverlib.h". Header file checks continue to provide helpful hints at build time until the user application adheres to __cc_rom.
- To use FFTLib in ROM, #include "DSPLib.h". FFTLib is a subset of the MSP software library DSPLib.
- For more information, see the MSP430 Driver Library for MSP430FR2xx_4xx ROM README and MSP DSP Library ROM README in MSP430Ware. The library ROM image is located above the 64KB memory address. Application code using ROM must be large code model (20-bit address pointer rather than 16-bit address pointer).

Benefits of ROM library use include:

- Code execution at clock speeds that exceed 8 MHz is faster from ROM than from FRAM, because the code avoids FRAM wait states (except FRAM controller cache hits). Without FRAM wait states, code execution performance is limited by only the processor clock, which is generally faster than other subsystems. Executing code from RAM gives comparable performance, but the available RAM size is typically more limited.
- More nonvolatile storage (FRAM) available in the device is left for application code.

7.4 Typical Applications

表 7-1 lists TI reference designs that use the MSP430FR235x devices in real-world application scenarios. Consult these designs for additional guidance regarding schematic, layout, and software implementation. For the most up-to-date list of available TI reference designs, visit the TI reference designs library.

表 7-1. Tools and Reference Designs

DESIGN NAME	LINK
4- to 20-mA Loop-Powered RTD Temperature Transmitter Reference Design With MSP430 Smart Analog Combo	TIDM-01000
MSP430FR2355 LaunchPad development kit	MSP-EXP430FR2355

8 デバイスおよびドキュメントのサポート

8.1 はじめに

MSP430™ファミリのデバイス、および開発に役立つツールやライブラリの詳細については、「MSP430™超低消費電力センシング/測定マイコンの概要」を参照してください。

8.2 デバイスの項目表記

製品開発サイクルの段階を示すために、TIではMSP MCUデバイスのすべての型番に接頭辞が割り当てられています。MSP MCU商用ファミリの各番号には、MSP、XMSのいずれかの接頭辞があります。これらの接頭辞は、製品開発の進展段階を表します。段階には、エンジニアリング・プロトタイプ(XMS)から、完全認定済みの量産デバイス(MSP)までがあります。

XMS - 実験段階のデバイスで、最終的なデバイスの電気的仕様を表しているとは限りません。

MSP - 完全に認定済みの量産版デバイスです。

XMSデバイスは、次の免責事項付きで出荷されます。

「開発中の製品は、社内での評価用です。」

MSPデバイスの特性は完全に明確化されており、デバイスの品質と信頼性が十分に示されています。TIの標準保証が適用されます。

プロトタイプ・デバイス(XMS)は標準の量産デバイスよりも故障率が高いことが予想されます。これらのデバイスは、予測される最終使用時の故障率が未定義であるため、TIはそれらのデバイスを量産システムで使用しないよう推奨しています。認定された量産デバイスのみを使用する必要があります。

TIデバイスの項目表記には、デバイス・ファミリ名の接尾辞も含まれます。この接尾辞は、温度範囲、パッケージ・タイプ、配布形式を示しています。デバイス名の各部の読み方を図 8-1に示します。

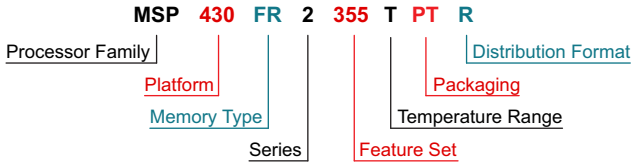

Processor Family	MSP = Mixed-Signal Processor XMS = Experimental Silicon	
Platform	430 = MSP430 16-Bit Low-Power Microcontroller	
Memory Type	FR = FRAM	
Series	2 = FRAM 2 Series, up to 24 MHz without LCD	
Feature Set	**First and Second Digits:** SAC Level / ADC Channels / COMP / 16-bit Timers / I/Os 35 = SAC-L3 / Up to 12 / 2 / 4 / Up to 44 15 = No SAC / Up to 12 / 2 / 4 / Up to 44	**Third Digit:** FRAM (KB) / SRAM (KB) 5 = 32 / 4 3 = 16 / 2
Temperature Range	T = –40°C to 105°C	
Packaging	http://www.ti.com/packaging	
Distribution Format	T = Small reel R = Large reel No marking = Tube or tray	

図 8-1. デバイスの項目表記

Copyright © 2018–2019, Texas Instruments Incorporated

8.3 ツールとソフトウェア

利用可能な機能の詳細については、*『Code Composer Studio™ IDE for MSP430™ MCUs User's Guide』(英語)* を参照してください。

MSP430FR235xおよびMSP430FR215xマイクロコントローラでサポートされているデバッグ機能の一覧を、表 8-1に示します。

表 8-1. ハードウェアの特長

MSP430のアーキテクチャ	4線式JTAG	2線式JTAG	ブレーク・ポイント (N)	範囲ブレーク・ポイント	クロック制御	状態シーケンサ	トレース・バッファ	LPMx.5デバッグ・サポート	EEMのバージョン
MSP430Xv2	○	○	3	○	○	×	×	×	S

設計キットと評価基板

MSP430FR2355 LaunchPad開発キット

MSP-EXP430FR2355 LaunchPad 開発キットは使いやすい評価基板 (EVM) で、超低消費電力の MSP430FR215x および MSP430FR235x FRAM マイクロコントローラ・ファミリを使用して開発を開始するため必要な、プログラミング、デバッグ、エネルギー測定用のオンボードのデバッグ・プローブなど、すべてのものが含まれています。

MSP-TS430PT48ターゲット開発基板

MSP-TS430PT48ターゲット開発基板は48ピンZIFソケットのターゲット基板で、JTAGインターフェイスまたはSpy-Bi-Wire (2線式JTAG)プロトコルによりMSP430 MCUをインシステムでプログラムおよびデバッグするために使用されます。

ソフトウェア

MSP430Ware™ソフトウェア

MSP430Wareソフトウェアは、すべてのMSP430デバイス向けのサンプル・コード、データシート、その他の設計リソースを、1つの便利なパッケージとしてまとめたものです。既存のMSP430用設計リソースの完全なコレクションに加えて、MSP430Wareソフトウェアにはドライバ・ライブラリという高レベルのAPIも含まれています。このライブラリにより、MSP430ハードウェアを簡単にプログラムできます。MSP430WareソフトウェアはCCSのコンポーネントとして、またはスタンドアロンのパッケージとして入手できます。

MSP430FR235xおよびMSP430FR215xのサンプル・コード

すべての MSP デバイス用に、内蔵の各ペリフェラルをさまざまなアプリケーションの要求に応じて構成するための C コード・サンプルが用意されています。

MSP ドライバ・ライブラリ

MSPドライバ・ライブラリの抽象化されたAPIには、使いやすい関数呼び出しが含まれているため、MSP430ハードウェアのビットやバイトを直接操作する煩雑さから解放されます。使いやすいAPIガイドにより包括的な技術資料が参照でき、それぞれの関数呼び出しと、認識されるパラメータの詳細が記載されています。開発者は、ドライバ・ライブラリの関数を使用して、最小限のオーバーヘッドで完全なプロジェクトを作成できます。

MSP EnergyTrace™ テクノロジ

MSP430 マイコン向け EnergyTrace テクノロジはエネルギー・ベースのコード分析ツールで、アプリケーションのエネルギー・プロファイルの測定と表示を行うとともに、消費電力の大幅な低減のための最適化も可能です。

ULP (超低消費電力) Advisor

ULP Advisor™ソフトウェアは、MSP430および MSP432™マイクロコントローラ独自の超低消費電力機能を十分に活用できる、より効率的なコードを開発者が作成できるよう手引きするツールです。ULP Advisorはマイクロコントローラに熟練した開発者と、新しい開発者の両方を対象としており、包括的なULPチェックリストを使用してコードをチェックし、アプリケーションのエネルギー消費を最小化するため役立ちます。ビルド時に、消費電力低減のためさらに最適化が可能なコードの部分を明らかにするため通知と注釈を出力します。

MSP超低消費電力マイクロコントローラ用FRAM組み込みソフトウェア・ユーティリティ

FRAMユーティリティは、組み込みソフトウェア・ユーティリティのコレクションとして成長するように設計されており、超低消費電力とほぼ無限の書き込み耐性というFRAMの特長を活用できます。このユーティリティはMSP430FRxx FRAMマイクロコントローラで利用でき、アプリケーション開発に役立つサンプル・コードを提供します。搭載されているユーティリティには、Compute Through Power Loss (CTPL)があります。CTPLはユーティリティAPIセットで、LPMx.5低消費電力モードにより使いやすさを実現する一方、強力なシャットダウン・モードにより、停電検出時にアプリケーションが重要なシステム・コンポーネントを保存・復元できます。

IEC60730 ソフトウェア・パッケージ

IEC60730 MSP430ソフトウェア・パッケージは、クラスBまでの製品について、お客様がIEC 60730-1:2010 (家庭および同様な用途に使用される自動電気制御 – 第1部: 一般的な要件)に準拠するため役立つよう開発されています。この分類には家電機器、アーク検出器、電力コンバータ、電動工具、電動アシスト自転車、その他多くの製品が含まれます。IEC60730 MSP430 ソフトウェア・パッケージはMSP430 MCUで実行するお客様のアプリケーションに組み込むことができるため、消費者向けデバイスがIEC 60730-1:2010クラスBの機能安全性に準拠していることの認定作業を簡素化できます。

MSP 用の固定小数点算術ライブラリ

MSP IQmathおよびQmathライブラリは、Cプログラマ向けの高度に最適化された高精度の算術関数のコレクションで、浮動小数点アルゴリズムをMSP430およびMSP432デバイスの固定小数点コードへシームレスに移行できます。これらのルーチンは通常、最適な実行速度、高精度、超低消費電力が重視される、演算集中型のリアルタイム・アプリケーションで使用されます。IQmathライブラリとQmathライブラリを使用すると、浮動小数点演算を使用して記述した同等のコードに比べて、実行速度を大幅に高速化するとともに、消費電力の大幅な削減が可能です。

MSP430 用の浮動小数点算術ライブラリ

低消費電力で低コストのマイクロコントローラ分野にさらなる革新を引き起こすため、TIはMSPMATHLIBを提供します。この浮動小数点算術ライブラリは、弊社デバイスのインテリジェントなペリフェラルを活用し、標準のMSP430算術関数よりも最高で26倍も高速なスカラー関数です。Mathlibは、設計へ簡単に組み入れることができます。このライブラリは無償で、Code Composer Studio IDEとIAR Embedded Workbench IDEの両方に組み込まれています。

開発ツール

Code Composer Studio™: MSPマイクロコントローラ用の統合開発環境

Code Composer Studio (CCS)は、すべてのMSPマイクロコントローラ・デバイスをサポートする統合開発環境(IDE)です。CCSは、組み込みアプリケーションの開発とデバッグに使用される、組み込み用ソフトウェア・ユーティリティのスイートです。最適化C/C++コンパイラ、ソース・コード・エディタ、プロジェクト・ビルド環境、デバッガ、プロファイラなど、多数の機能が含まれています。

IAR Embedded Workbench® IDE

MSP430 MCU用のIAR Embedded Workbench IDEは、MSP430マイクロコントローラをベースとする組込みアプリケーションのビルドとデバッグに使用する包括的なC/C++コンパイラ・ツールチェーンです。このデバッガは、ソースと逆アセンブリの両方のコードで使用でき、複雑なコードおよびデータのブレークポイントをサポートしています。また、ハードウェア・シミュレータが用意されており、物理的なターゲットを接続しなくてもデバッグを行えます。

Uniflashスタンドアロン・フラッシュ・ツール

Uniflash スタンドアロン・フラッシュ・ツールは、TI MCU のオンチップのフラッシュ・メモリをプログラムするために使用されます。Uniflashは、GUI、コマンド・ライン、スクリプト・インターフェイスを備えています。Uniflashソフトウェア・ツールはTIクラウド・ツールで利用することも、TI Webページからデスクトップ・アプリケーションとしてダウンロードすることもできます。

MSP MCU プログラマおよびデバッガ

MSP-FETは強力なエミュレーション開発ツールで、多くの場合にデバッグ・プローブと呼ばれます。ユーザーはこのツールを使用して、MSP低消費電力MCUのアプリケーション開発をすぐに始めることができます。MCUのソフトウェアを作成する場合は通常、結果として得られたバイナリ・プログラムをMSPデバイスにダウンロードし、検証とデバッグを行う必要があります。

Copyright © 2018–2019, Texas Instruments Incorporated

MSP-GANG量産プログラマ

MSP Gang プログラマは MSP430 または MSP432 用のデバイス・プログラマで、8つまでの同一の MSP430 または MSP432 のフラッシュまたは FRAM デバイスを同時にプログラムできます。MSP Gang プログラマは、標準の RS-232 または USB 接続を使用してホスト PC と接続し、柔軟なプログラミング・オプションが用意されているため、ユーザーはプロセスを完全にカスタマイズ可能です。

TIREX Resource Explorer (TIRex)

デバイスと開発基板用のサンプル、ライブラリ、実行形式ファイル、ドキュメントのオンライン・ポータルです。TIRex は、Code Composer Studio IDEまたはTIクラウド・ツールから直接アクセスできます。

TIクラウド・ツール

dev.ti.comで、すぐに開発を開始できます。Resource Explorerインターフェイスにより、必要なすべてのファイルを迅速に検索できます。その後で、業界最先端のCode Composer Studio Cloud IDEを使用して、クラウド内で組み込みアプリケーションの編集、ビルド、デバッグを行えます。

GCC - MSP用コンパイラ

MSP430 および MSP432 GCC オープン・ソース・パッケージは、MSP430 および MSP432 マイクロコントローラをベースとする組み込みアプリケーションのビルドとデバッグを行うための、完全なデバッガとオープン・ソース C/C++ コンパイラのツールチェーンです。これらの無償 GCC コンパイラは、すべての MSP430 および MSP432 デバイスをサポートし、コード・サイズの制限もありません。さらに、これらのコンパイラはコマンドラインからスタンドアロンで使用することも、Code Composer Studio v6.0 またはそれ以降から使用することもできます。使用環境が Windows®、Linux®、macOS®のいずれであっても、すぐに開発を開始できます。

8.4 ドキュメントのサポート

以下のドキュメントには、MSP430FR235xおよびMSP430FR215xマイクロコントローラについて記載されています。

ドキュメントの更新通知を受け取る方法

ドキュメント更新の通知を、シリコンの正誤表も含めて受け取るには、ti.com でお使いの製品のフォルダへ移動します (プロダクト・フォルダへのリンクについては、8.5 を参照してください)。右上の「アラートを受け取る」ボタンをクリックします。これによって登録が行われ、変更された製品情報の概要を毎週受け取ることができます。変更の詳細については、修正されたドキュメントに含まれている改訂履歴をご覧ください。

正誤表

『MSP430FR2355 デバイス正誤表』

このデバイスにおけるすべてのシリコンのリビジョンについて、機能仕様に関する既知の例外が記載されています。

『MSP430FR2353 デバイス正誤表』

このデバイスにおけるすべてのシリコンのリビジョンについて、機能仕様に関する既知の例外が記載されています。

『MSP430FR2155 デバイス正誤表』

このデバイスにおけるすべてのシリコンのリビジョンについて、機能仕様に関する既知の例外が記載されています。

『MSP430FR2153 デバイス正誤表』

このデバイスにおけるすべてのシリコンのリビジョンについて、機能仕様に関する既知の例外が記載されています。

ユーザー・ガイド

『MSP430FR4xxおよびMSP430FR2xxファミリ ユーザー・ガイド』

このデバイス・ファミリで利用可能なすべてのモジュールとペリフェラルについての詳細情報です。

『MSP430 FRAMデバイス・ブートローダ(BSL) ユーザー・ガイド』

MSP430 MCUに搭載されたブートローダ(BSL)を使用すると、プロトタイプ作成フェーズ、最終的な量産、およびサービス中に、MSP430 MCUの組み込みメモリと通信できます。必要に応じて、プログラム可能メモリ(フラッシュ・メモリ)とデータ・メモリ(RAM)の両方を変更できます。

『JTAGインターフェイスによるMSP430のプログラミング』

このドキュメントでは、JTAG通信ポートを使用してMSP430のフラッシュ・ベースおよびFRAMベースのマイクロコントローラ・ファミリのメモリ・モジュールを消去、プログラム、検証するために必要な機能について解説しています。さらに、すべてのMSP430デバイスで利用可能なJTAGアクセス・セキュリティ・ヒューズのプログラム方法についても解説しています。このドキュメントには、標準の4線式JTAGインターフェイスと2線式JTAGインターフェイスの両方を使用してデバイスにアクセスする方法が解説されています。2線式JTAGインターフェイスはSpy-Bi-Wire (SBW)とも呼ばれます。

『MSP430ハードウェア・ツール ユーザー・ガイド』

このマニュアルには、TI MSP-FET430フラッシュ・エミュレーション・ツール(FET)のハードウェアについて解説されています。このFETは、MSP430超低消費電力マイクロコントローラ用のプログラム開発ツールです。利用可能なインターフェイスとして、パラレル・ポート・インターフェイスとUSBインターフェイスの両方について解説されています。

アプリケーション・レポート

『MSP430™ 32kHz 水晶発振器』

適切な水晶、正しい負荷回路、および適切な基板レイアウトの選択は、安定した水晶発振器のために重要です。このアプリケーション・レポートでは、水晶発振器の機能について要約し、MSP430の超低消費電力動作用の適切な水晶を選択するためのパラメータについて説明します。また、正しい基板レイアウトについてのヒントや例も紹介しています。このドキュメントには、量産時の安定した発振器の動作を保証するために行うことができる、発振器のテストについての詳細情報も記載されています。

『MSP430 システム・レベルESDの考慮事項』

シリコン・テクノロジのスケーリングによる低電圧化の進行と、コスト効率の優れた超低消費電力コンポーネントを設計する必要性の高まりにより、システム・レベルの ESD の要求はますます高まっています。このアプリケーション・レポートでは、基板設計者と OEM が堅牢なシステム・レベルのデザインを理解し設計できるよう、各種の ESD トピックについて扱います。

8.5 関連リンク

表 8-2 に、クイック・アクセス・リンクの一覧を示します。カテゴリには、技術資料、サポートおよびコミュニティ・リソース、ツールとソフトウェア、およびご注文へのクイック・アクセスが含まれます。

表 8-2. 関連リンク

製品	プロダクト・フォルダ	ご注文はこちら	技術資料	ツールとソフトウェア	サポートとコミュニティ
MSP430FR2355	ここをクリック	ここをクリック	ここをクリック	ここをクリック	ここをクリック
MSP430FR2353	ここをクリック	ここをクリック	ここをクリック	ここをクリック	ここをクリック
MSP430FR2155	ここをクリック	ここをクリック	ここをクリック	ここをクリック	ここをクリック
MSP430FR2153	ここをクリック	ここをクリック	ここをクリック	ここをクリック	ここをクリック

Copyright © 2018–2019, Texas Instruments Incorporated

8.6 商標

LaunchPad, MSP430, MSP430Ware, Code Composer Studio, E2E, EnergyTrace, ULP Advisor, MSP432 are trademarks of Texas Instruments.
macOS is a registered trademark of Apple, Inc.
IAR Embedded Workbench is a registered trademark of IAR Systems.
Linux is a registered trademark of Linus Torvalds.
Windows is a registered trademark of Microsoft Corporation.

8.7 静電気放電に関する注意事項

すべての集積回路は、適切なESD保護方法を用いて、取扱いと保存を行うようにして下さい。

静電気放電はわずかな性能の低下から完全なデバイスの故障に至るまで、様々な損傷を与えます。高精度の集積回路は、損傷に対して敏感であり、極めてわずかなパラメータの変化により、デバイスに規定された仕様に適合しなくなる場合があります。

8.8 Glossary

TI Glossary This glossary lists and explains terms, acronyms, and definitions.

9 メカニカル、パッケージ、および注文情報

以降のページには、メカニカル、パッケージ、および注文に関する情報が記載されています。この情報は、そのデバイスについて利用可能な最新のデータです。このデータは予告なく変更されることがあり、ドキュメントが改訂される場合もあります。本データシートのブラウザ版を使用されている場合は、画面左側の説明をご覧ください。

Copyright © 2018–2019, Texas Instruments Incorporated

PACKAGING INFORMATION

Orderable part number	Status (1)	Material type (2)	Package | Pins	Package qty | Carrier	RoHS (3)	Lead finish/ Ball material (4)	MSL rating/ Peak reflow (5)	Op temp (°C)	Part marking (6)
M430FR2155TRSMTG4	Active	Production	VQFN (RSM) | 32	250 | SMALL T&R	Yes	NIPDAU	Level-1-260C-UNLIM	-40 to 105	FR2155
M430FR2155TRSMTG4.A	Active	Production	VQFN (RSM) | 32	250 | SMALL T&R	Yes	NIPDAU	Level-1-260C-UNLIM	-40 to 105	FR2155
M430FR2355TRSMRG4	Active	Production	VQFN (RSM) | 32	3000 | LARGE T&R	Yes	NIPDAU	Level-1-260C-UNLIM	-40 to 105	FR2355
M430FR2355TRSMRG4.A	Active	Production	VQFN (RSM) | 32	3000 | LARGE T&R	Yes	NIPDAU	Level-1-260C-UNLIM	-40 to 105	FR2355
MSP430FR2153TDBT	Active	Production	TSSOP (DBT) | 38	50 | TUBE	Yes	NIPDAU	Level-2-260C-1 YEAR	-40 to 105	430FR2153
MSP430FR2153TDBT.A	Active	Production	TSSOP (DBT) | 38	50 | TUBE	Yes	NIPDAU	Level-2-260C-1 YEAR	-40 to 105	430FR2153
MSP430FR2153TDBTR	Active	Production	TSSOP (DBT) | 38	2000 | LARGE T&R	Yes	NIPDAU	Level-2-260C-1 YEAR	-40 to 105	430FR2153
MSP430FR2153TDBTR.A	Active	Production	TSSOP (DBT) | 38	2000 | LARGE T&R	Yes	NIPDAU	Level-2-260C-1 YEAR	-40 to 105	430FR2153
MSP430FR2153TPT	Active	Production	LQFP (PT) | 48	250 | JEDEC TRAY (10+1)	Yes	NIPDAU | NIPDAU	Level-3-260C-168 HR	-40 to 105	430FR2153
MSP430FR2153TPT.A	Active	Production	LQFP (PT) | 48	250 | JEDEC TRAY (10+1)	Yes	NIPDAU	Level-3-260C-168 HR	-40 to 105	430FR2153
MSP430FR2153TPTR	Active	Production	LQFP (PT) | 48	1000 | LARGE T&R	Yes	NIPDAU | NIPDAU	Level-3-260C-168 HR	-40 to 105	430FR2153
MSP430FR2153TPTR.A	Active	Production	LQFP (PT) | 48	1000 | LARGE T&R	Yes	NIPDAU	Level-3-260C-168 HR	-40 to 105	430FR2153
MSP430FR2153TRHAR	Active	Production	VQFN (RHA) | 40	2500 | LARGE T&R	Yes	NIPDAU	Level-1-260C-UNLIM	-40 to 105	FR2153
MSP430FR2153TRHAR.A	Active	Production	VQFN (RHA) | 40	2500 | LARGE T&R	Yes	NIPDAU	Level-1-260C-UNLIM	-40 to 105	FR2153
MSP430FR2153TRHAT	Active	Production	VQFN (RHA) | 40	250 | SMALL T&R	Yes	NIPDAU	Level-1-260C-UNLIM	-40 to 105	FR2153
MSP430FR2153TRHAT.A	Active	Production	VQFN (RHA) | 40	250 | SMALL T&R	Yes	NIPDAU	Level-1-260C-UNLIM	-40 to 105	FR2153
MSP430FR2153TRSMR	Active	Production	VQFN (RSM) | 32	3000 | LARGE T&R	Yes	NIPDAU	Level-1-260C-UNLIM	-40 to 105	FR2153
MSP430FR2153TRSMR.A	Active	Production	VQFN (RSM) | 32	3000 | LARGE T&R	Yes	NIPDAU	Level-1-260C-UNLIM	-40 to 105	FR2153
MSP430FR2153TRSMT	Active	Production	VQFN (RSM) | 32	250 | SMALL T&R	Yes	NIPDAU	Level-1-260C-UNLIM	-40 to 105	FR2153
MSP430FR2153TRSMT.A	Active	Production	VQFN (RSM) | 32	250 | SMALL T&R	Yes	NIPDAU	Level-1-260C-UNLIM	-40 to 105	FR2153
MSP430FR2155TDBT	Active	Production	TSSOP (DBT) | 38	50 | TUBE	Yes	NIPDAU	Level-2-260C-1 YEAR	-40 to 105	430FR2155
MSP430FR2155TDBT.A	Active	Production	TSSOP (DBT) | 38	50 | TUBE	Yes	NIPDAU	Level-2-260C-1 YEAR	-40 to 105	430FR2155
MSP430FR2155TDBTR	Active	Production	TSSOP (DBT) | 38	2000 | LARGE T&R	Yes	NIPDAU	Level-2-260C-1 YEAR	-40 to 105	430FR2155
MSP430FR2155TDBTR.A	Active	Production	TSSOP (DBT) | 38	2000 | LARGE T&R	Yes	NIPDAU	Level-2-260C-1 YEAR	-40 to 105	430FR2155
MSP430FR2155TPT	Active	Production	LQFP (PT) | 48	250 | JEDEC TRAY (10+1)	Yes	NIPDAU | NIPDAU	Level-3-260C-168 HR	-40 to 105	430FR2155
MSP430FR2155TPT.A	Active	Production	LQFP (PT) | 48	250 | JEDEC TRAY (10+1)	Yes	NIPDAU	Level-3-260C-168 HR	-40 to 105	430FR2155

Orderable part number	Status (1)	Material type (2)	Package | Pins	Package qty | Carrier	RoHS (3)	Lead finish/ Ball material (4)	MSL rating/ Peak reflow (5)	Op temp (°C)	Part marking (6)
MSP430FR2155TPTR	Active	Production	LQFP (PT) | 48	1000 | LARGE T&R	Yes	NIPDAU | NIPDAU	Level-3-260C-168 HR	-40 to 105	430FR2155
MSP430FR2155TPTR.A	Active	Production	LQFP (PT) | 48	1000 | LARGE T&R	Yes	NIPDAU	Level-3-260C-168 HR	-40 to 105	430FR2155
MSP430FR2155TRHAR	Active	Production	VQFN (RHA) | 40	2500 | LARGE T&R	Yes	NIPDAU	Level-1-260C-UNLIM	-40 to 105	FR2155
MSP430FR2155TRHAR.A	Active	Production	VQFN (RHA) | 40	2500 | LARGE T&R	Yes	NIPDAU	Level-1-260C-UNLIM	-40 to 105	FR2155
MSP430FR2155TRHAT	Active	Production	VQFN (RHA) | 40	250 | SMALL T&R	Yes	NIPDAU	Level-1-260C-UNLIM	-40 to 105	FR2155
MSP430FR2155TRHAT.A	Active	Production	VQFN (RHA) | 40	250 | SMALL T&R	Yes	NIPDAU	Level-1-260C-UNLIM	-40 to 105	FR2155
MSP430FR2155TRSMR	Active	Production	VQFN (RSM) | 32	3000 | LARGE T&R	Yes	NIPDAU	Level-1-260C-UNLIM	-40 to 105	FR2155
MSP430FR2155TRSMR.A	Active	Production	VQFN (RSM) | 32	3000 | LARGE T&R	Yes	NIPDAU	Level-1-260C-UNLIM	-40 to 105	FR2155
MSP430FR2155TRSMT	Active	Production	VQFN (RSM) | 32	250 | SMALL T&R	Yes	NIPDAU	Level-1-260C-UNLIM	-40 to 105	FR2155
MSP430FR2155TRSMT.A	Active	Production	VQFN (RSM) | 32	250 | SMALL T&R	Yes	NIPDAU	Level-1-260C-UNLIM	-40 to 105	FR2155
MSP430FR2353TDBT	Active	Production	TSSOP (DBT) | 38	50 | TUBE	Yes	NIPDAU	Level-2-260C-1 YEAR	-40 to 105	430FR2353
MSP430FR2353TDBT.A	Active	Production	TSSOP (DBT) | 38	50 | TUBE	Yes	NIPDAU	Level-2-260C-1 YEAR	-40 to 105	430FR2353
MSP430FR2353TDBTR	Active	Production	TSSOP (DBT) | 38	2000 | LARGE T&R	Yes	NIPDAU	Level-2-260C-1 YEAR	-40 to 105	430FR2353
MSP430FR2353TDBTR.A	Active	Production	TSSOP (DBT) | 38	2000 | LARGE T&R	Yes	NIPDAU	Level-2-260C-1 YEAR	-40 to 105	430FR2353
MSP430FR2353TPT	Active	Production	LQFP (PT) | 48	250 | JEDEC TRAY (10+1)	Yes	NIPDAU | NIPDAU	Level-3-260C-168 HR	-40 to 105	430FR2353
MSP430FR2353TPT.A	Active	Production	LQFP (PT) | 48	250 | JEDEC TRAY (10+1)	Yes	NIPDAU	Level-3-260C-168 HR	-40 to 105	430FR2353
MSP430FR2353TPTR	Active	Production	LQFP (PT) | 48	1000 | LARGE T&R	Yes	NIPDAU | NIPDAU	Level-3-260C-168 HR	-40 to 105	430FR2353
MSP430FR2353TPTR.A	Active	Production	LQFP (PT) | 48	1000 | LARGE T&R	Yes	NIPDAU	Level-3-260C-168 HR	-40 to 105	430FR2353
MSP430FR2353TRHAR	Active	Production	VQFN (RHA) | 40	2500 | LARGE T&R	Yes	NIPDAU	Level-1-260C-UNLIM	-40 to 105	FR2353
MSP430FR2353TRHAR.A	Active	Production	VQFN (RHA) | 40	2500 | LARGE T&R	Yes	NIPDAU	Level-1-260C-UNLIM	-40 to 105	FR2353
MSP430FR2353TRHAT	Active	Production	VQFN (RHA) | 40	250 | SMALL T&R	Yes	NIPDAU	Level-1-260C-UNLIM	-40 to 105	FR2353
MSP430FR2353TRHAT.A	Active	Production	VQFN (RHA) | 40	250 | SMALL T&R	Yes	NIPDAU	Level-1-260C-UNLIM	-40 to 105	FR2353
MSP430FR2353TRSMR	Active	Production	VQFN (RSM) | 32	3000 | LARGE T&R	Yes	NIPDAU	Level-1-260C-UNLIM	-40 to 105	FR2353
MSP430FR2353TRSMR.A	Active	Production	VQFN (RSM) | 32	3000 | LARGE T&R	Yes	NIPDAU	Level-1-260C-UNLIM	-40 to 105	FR2353
MSP430FR2353TRSMT	Active	Production	VQFN (RSM) | 32	250 | SMALL T&R	Yes	NIPDAU	Level-1-260C-UNLIM	-40 to 105	FR2353
MSP430FR2353TRSMT.A	Active	Production	VQFN (RSM) | 32	250 | SMALL T&R	Yes	NIPDAU	Level-1-260C-UNLIM	-40 to 105	FR2353
MSP430FR2355TDBT	Active	Production	TSSOP (DBT) | 38	50 | TUBE	Yes	NIPDAU	Level-2-260C-1 YEAR	-40 to 105	430FR2355
MSP430FR2355TDBT.A	Active	Production	TSSOP (DBT) | 38	50 | TUBE	Yes	NIPDAU	Level-2-260C-1 YEAR	-40 to 105	430FR2355
MSP430FR2355TDBTR	Active	Production	TSSOP (DBT) | 38	2000 | LARGE T&R	Yes	NIPDAU	Level-2-260C-1 YEAR	-40 to 105	430FR2355

Orderable part number	Status (1)	Material type (2)	Package | Pins	Package qty | Carrier	RoHS (3)	Lead finish/ Ball material (4)	MSL rating/ Peak reflow (5)	Op temp (°C)	Part marking (6)
MSP430FR2355TDBTR.A	Active	Production	TSSOP (DBT) | 38	2000 | LARGE T&R	Yes	NIPDAU	Level-2-260C-1 YEAR	-40 to 105	430FR2355
MSP430FR2355TPT	Active	Production	LQFP (PT) | 48	250 | JEDEC TRAY (10+1)	Yes	NIPDAU | NIPDAU	Level-3-260C-168 HR	-40 to 105	430FR2355
MSP430FR2355TPT.A	Active	Production	LQFP (PT) | 48	250 | JEDEC TRAY (10+1)	Yes	NIPDAU	Level-3-260C-168 HR	-40 to 105	430FR2355
MSP430FR2355TPTR	Active	Production	LQFP (PT) | 48	1000 | LARGE T&R	Yes	NIPDAU | NIPDAU	Level-3-260C-168 HR	-40 to 105	430FR2355
MSP430FR2355TPTR.A	Active	Production	LQFP (PT) | 48	1000 | LARGE T&R	Yes	NIPDAU	Level-3-260C-168 HR	-40 to 105	430FR2355
MSP430FR2355TRHAR	Active	Production	VQFN (RHA) | 40	2500 | LARGE T&R	Yes	NIPDAU	Level-1-260C-UNLIM	-40 to 105	FR2355
MSP430FR2355TRHAR.A	Active	Production	VQFN (RHA) | 40	2500 | LARGE T&R	Yes	NIPDAU	Level-1-260C-UNLIM	-40 to 105	FR2355
MSP430FR2355TRHAT	Active	Production	VQFN (RHA) | 40	250 | SMALL T&R	Yes	NIPDAU	Level-1-260C-UNLIM	-40 to 105	FR2355
MSP430FR2355TRHAT.A	Active	Production	VQFN (RHA) | 40	250 | SMALL T&R	Yes	NIPDAU	Level-1-260C-UNLIM	-40 to 105	FR2355
MSP430FR2355TRSMR	Active	Production	VQFN (RSM) | 32	3000 | LARGE T&R	Yes	NIPDAU	Level-1-260C-UNLIM	-40 to 105	FR2355
MSP430FR2355TRSMR.A	Active	Production	VQFN (RSM) | 32	3000 | LARGE T&R	Yes	NIPDAU	Level-1-260C-UNLIM	-40 to 105	FR2355
MSP430FR2355TRSMT	Active	Production	VQFN (RSM) | 32	250 | SMALL T&R	Yes	NIPDAU	Level-1-260C-UNLIM	-40 to 105	FR2355
MSP430FR2355TRSMT.A	Active	Production	VQFN (RSM) | 32	250 | SMALL T&R	Yes	NIPDAU	Level-1-260C-UNLIM	-40 to 105	FR2355

(1) **Status:** For more details on status, see our product life cycle.

(2) **Material type:** When designated, preproduction parts are prototypes/experimental devices, and are not yet approved or released for full production. Testing and final process, including without limitation quality assurance, reliability performance testing, and/or process qualification, may not yet be complete, and this item is subject to further changes or possible discontinuation. If available for ordering, purchases will be subject to an additional waiver at checkout, and are intended for early internal evaluation purposes only. These items are sold without warranties of any kind.

(3) **RoHS values:** Yes, No, RoHS Exempt. See the TI RoHS Statement for additional information and value definition.

(4) **Lead finish/Ball material:** Parts may have multiple material finish options. Finish options are separated by a vertical ruled line. Lead finish/Ball material values may wrap to two lines if the finish value exceeds the maximum column width.

(5) **MSL rating/Peak reflow:** The moisture sensitivity level ratings and peak solder (reflow) temperatures. In the event that a part has multiple moisture sensitivity ratings, only the lowest level per JEDEC standards is shown. Refer to the shipping label for the actual reflow temperature that will be used to mount the part to the printed circuit board.

(6) **Part marking:** There may be an additional marking, which relates to the logo, the lot trace code information, or the environmental category of the part.

Multiple part markings will be inside parentheses. Only one part marking contained in parentheses and separated by a "~" will appear on a part. If a line is indented then it is a continuation of the previous line and the two combined represent the entire part marking for that device.

Important Information and Disclaimer: The information provided on this page represents TI's knowledge and belief as of the date that it is provided. TI bases its knowledge and belief on information provided by third parties, and makes no representation or warranty as to the accuracy of such information. Efforts are underway to better integrate information from third parties. TI has taken and continues to take reasonable steps to provide representative and accurate information but may not have conducted destructive testing or chemical analysis on incoming materials and chemicals. TI and TI suppliers consider certain information to be proprietary, and thus CAS numbers and other limited information may not be available for release.

In no event shall TI's liability arising out of such information exceed the total purchase price of the TI part(s) at issue in this document sold by TI to Customer on an annual basis.

TAPE AND REEL INFORMATION

REEL DIMENSIONS

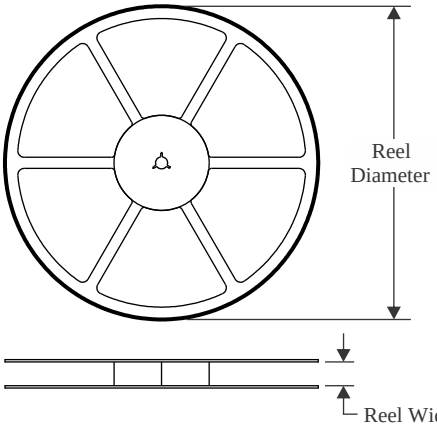

TAPE DIMENSIONS

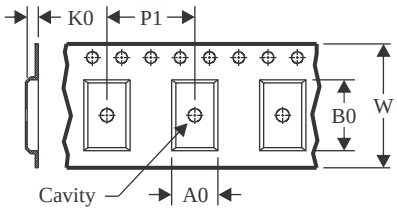

A0	Dimension designed to accommodate the component width
B0	Dimension designed to accommodate the component length
K0	Dimension designed to accommodate the component thickness
W	Overall width of the carrier tape
P1	Pitch between successive cavity centers

QUADRANT ASSIGNMENTS FOR PIN 1 ORIENTATION IN TAPE

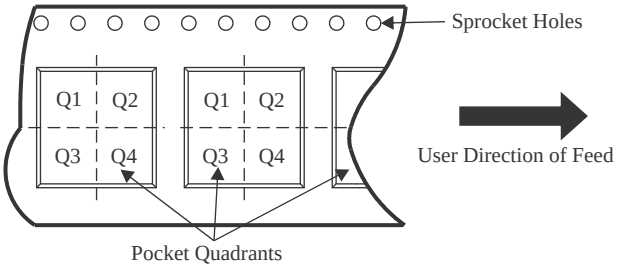

*All dimensions are nominal

Device	Package Type	Package Drawing	Pins	SPQ	Reel Diameter (mm)	Reel Width W1 (mm)	A0 (mm)	B0 (mm)	K0 (mm)	P1 (mm)	W (mm)	Pin1 Quadrant
M430FR2155TRSMTG4	VQFN	RSM	32	250	180.0	12.4	4.25	4.25	1.15	8.0	12.0	Q2
M430FR2355TRSMRG4	VQFN	RSM	32	3000	330.0	12.4	4.25	4.25	1.15	8.0	12.0	Q2
MSP430FR2153TDBTR	TSSOP	DBT	38	2000	330.0	16.4	6.9	10.2	1.8	12.0	16.0	Q1
MSP430FR2153TPTR	LQFP	PT	48	1000	330.0	16.4	9.6	9.6	1.9	12.0	16.0	Q2
MSP430FR2153TRHAR	VQFN	RHA	40	2500	330.0	16.4	6.3	6.3	1.1	12.0	16.0	Q2
MSP430FR2153TRHAT	VQFN	RHA	40	250	180.0	16.4	6.3	6.3	1.1	12.0	16.0	Q2
MSP430FR2153TRSMR	VQFN	RSM	32	3000	330.0	12.4	4.25	4.25	1.15	8.0	12.0	Q2
MSP430FR2153TRSMT	VQFN	RSM	32	250	180.0	12.4	4.25	4.25	1.15	8.0	12.0	Q2
MSP430FR2155TDBTR	TSSOP	DBT	38	2000	330.0	16.4	6.9	10.2	1.8	12.0	16.0	Q1
MSP430FR2155TPTR	LQFP	PT	48	1000	330.0	16.4	9.6	9.6	1.9	12.0	16.0	Q2
MSP430FR2155TRHAR	VQFN	RHA	40	2500	330.0	16.4	6.3	6.3	1.1	12.0	16.0	Q2
MSP430FR2155TRHAT	VQFN	RHA	40	250	180.0	16.4	6.3	6.3	1.1	12.0	16.0	Q2
MSP430FR2155TRSMR	VQFN	RSM	32	3000	330.0	12.4	4.25	4.25	1.15	8.0	12.0	Q2
MSP430FR2155TRSMT	VQFN	RSM	32	250	180.0	12.4	4.25	4.25	1.15	8.0	12.0	Q2
MSP430FR2353TDBTR	TSSOP	DBT	38	2000	330.0	16.4	6.9	10.2	1.8	12.0	16.0	Q1
MSP430FR2353TPTR	LQFP	PT	48	1000	330.0	16.4	9.6	9.6	1.9	12.0	16.0	Q2

Device	Package Type	Package Drawing	Pins	SPQ	Reel Diameter (mm)	Reel Width W1 (mm)	A0 (mm)	B0 (mm)	K0 (mm)	P1 (mm)	W (mm)	Pin1 Quadrant
MSP430FR2353TRHAR	VQFN	RHA	40	2500	330.0	16.4	6.3	6.3	1.1	12.0	16.0	Q2
MSP430FR2353TRHAT	VQFN	RHA	40	250	180.0	16.4	6.3	6.3	1.1	12.0	16.0	Q2
MSP430FR2353TRSMR	VQFN	RSM	32	3000	330.0	12.4	4.25	4.25	1.15	8.0	12.0	Q2
MSP430FR2353TRSMT	VQFN	RSM	32	250	180.0	12.4	4.25	4.25	1.15	8.0	12.0	Q2
MSP430FR2355TDBTR	TSSOP	DBT	38	2000	330.0	16.4	6.9	10.2	1.8	12.0	16.0	Q1
MSP430FR2355TPTR	LQFP	PT	48	1000	330.0	16.4	9.6	9.6	1.9	12.0	16.0	Q2
MSP430FR2355TRHAR	VQFN	RHA	40	2500	330.0	16.4	6.3	6.3	1.1	12.0	16.0	Q2
MSP430FR2355TRHAT	VQFN	RHA	40	250	180.0	16.4	6.3	6.3	1.1	12.0	16.0	Q2
MSP430FR2355TRSMR	VQFN	RSM	32	3000	330.0	12.4	4.25	4.25	1.15	8.0	12.0	Q2
MSP430FR2355TRSMT	VQFN	RSM	32	250	180.0	12.4	4.25	4.25	1.15	8.0	12.0	Q2

TAPE AND REEL BOX DIMENSIONS

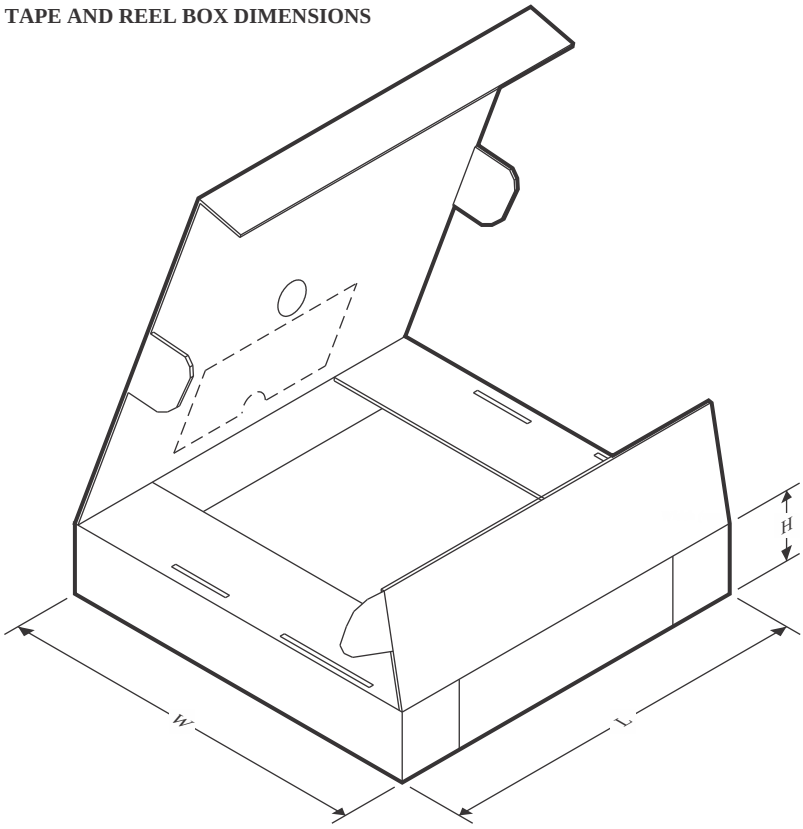

*All dimensions are nominal

Device	Package Type	Package Drawing	Pins	SPQ	Length (mm)	Width (mm)	Height (mm)
M430FR2155TRSMTG4	VQFN	RSM	32	250	210.0	185.0	35.0
M430FR2355TRSMRG4	VQFN	RSM	32	3000	367.0	367.0	35.0
MSP430FR2153TDBTR	TSSOP	DBT	38	2000	350.0	350.0	43.0
MSP430FR2153TPTR	LQFP	PT	48	1000	336.6	336.6	31.8
MSP430FR2153TRHAR	VQFN	RHA	40	2500	367.0	367.0	35.0
MSP430FR2153TRHAT	VQFN	RHA	40	250	210.0	185.0	35.0
MSP430FR2153TRSMR	VQFN	RSM	32	3000	367.0	367.0	35.0
MSP430FR2153TRSMT	VQFN	RSM	32	250	210.0	185.0	35.0
MSP430FR2155TDBTR	TSSOP	DBT	38	2000	350.0	350.0	43.0
MSP430FR2155TPTR	LQFP	PT	48	1000	336.6	336.6	31.8
MSP430FR2155TRHAR	VQFN	RHA	40	2500	367.0	367.0	35.0
MSP430FR2155TRHAT	VQFN	RHA	40	250	210.0	185.0	35.0
MSP430FR2155TRSMR	VQFN	RSM	32	3000	367.0	367.0	35.0
MSP430FR2155TRSMT	VQFN	RSM	32	250	210.0	185.0	35.0
MSP430FR2353TDBTR	TSSOP	DBT	38	2000	350.0	350.0	43.0
MSP430FR2353TPTR	LQFP	PT	48	1000	336.6	336.6	31.8
MSP430FR2353TRHAR	VQFN	RHA	40	2500	367.0	367.0	35.0
MSP430FR2353TRHAT	VQFN	RHA	40	250	210.0	185.0	35.0

Device	Package Type	Package Drawing	Pins	SPQ	Length (mm)	Width (mm)	Height (mm)
MSP430FR2353TRSMR	VQFN	RSM	32	3000	367.0	367.0	35.0
MSP430FR2353TRSMT	VQFN	RSM	32	250	210.0	185.0	35.0
MSP430FR2355TDBTR	TSSOP	DBT	38	2000	350.0	350.0	43.0
MSP430FR2355TPTR	LQFP	PT	48	1000	336.6	336.6	31.8
MSP430FR2355TRHAR	VQFN	RHA	40	2500	367.0	367.0	35.0
MSP430FR2355TRHAT	VQFN	RHA	40	250	210.0	185.0	35.0
MSP430FR2355TRSMR	VQFN	RSM	32	3000	367.0	367.0	35.0
MSP430FR2355TRSMT	VQFN	RSM	32	250	210.0	185.0	35.0

TUBE

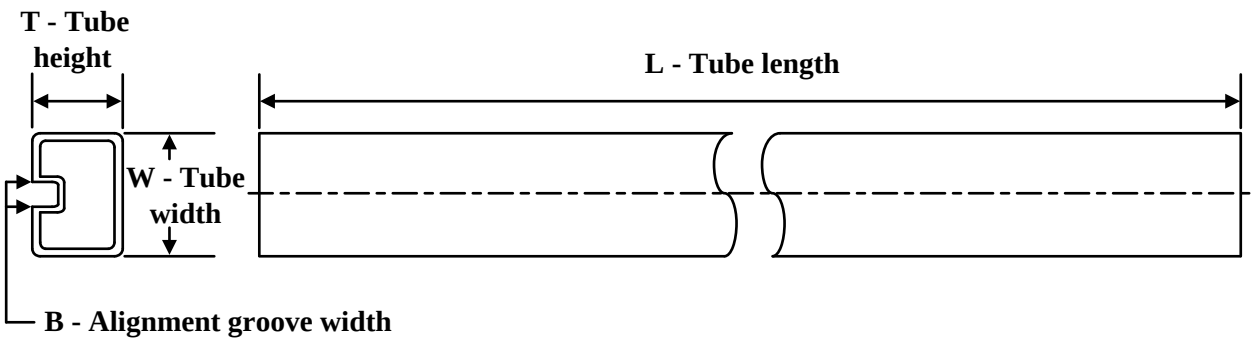

*All dimensions are nominal

Device	Package Name	Package Type	Pins	SPQ	L (mm)	W (mm)	T (µm)	B (mm)
MSP430FR2153TDBT	DBT	TSSOP	38	50	530	10.2	3600	3.5
MSP430FR2153TDBT.A	DBT	TSSOP	38	50	530	10.2	3600	3.5
MSP430FR2155TDBT	DBT	TSSOP	38	50	530	10.2	3600	3.5
MSP430FR2155TDBT.A	DBT	TSSOP	38	50	530	10.2	3600	3.5
MSP430FR2353TDBT	DBT	TSSOP	38	50	530	10.2	3600	3.5
MSP430FR2353TDBT.A	DBT	TSSOP	38	50	530	10.2	3600	3.5
MSP430FR2355TDBT	DBT	TSSOP	38	50	530	10.2	3600	3.5
MSP430FR2355TDBT.A	DBT	TSSOP	38	50	530	10.2	3600	3.5

TRAY

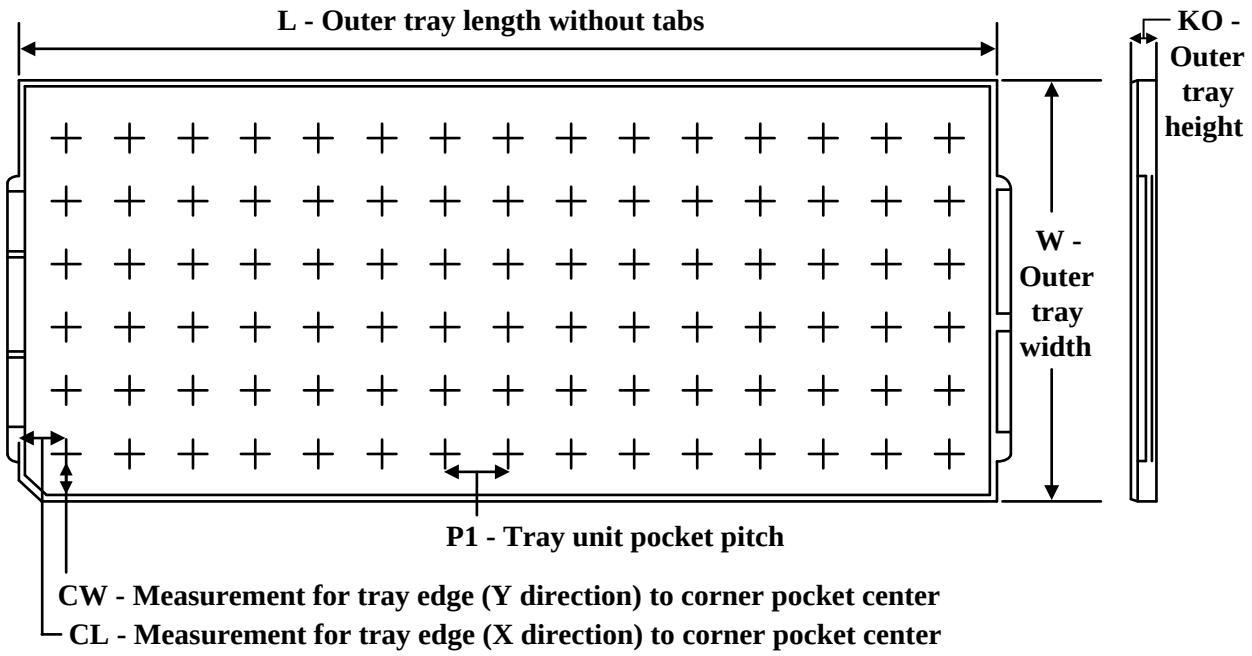

Chamfer on Tray corner indicates Pin 1 orientation of packed units.

*All dimensions are nominal

Device	Package Name	Package Type	Pins	SPQ	Unit array matrix	Max temperature (°C)	L (mm)	W (mm)	K0 (µm)	P1 (mm)	CL (mm)	CW (mm)
MSP430FR2153TPT	PT	LQFP	48	250	10 x 25	150	315	135.9	7620	12.2	11.1	11.25
MSP430FR2153TPT	PT	LQFP	48	250	10 x 25	150	315	135.9	7620	12.2	11.1	11.25
MSP430FR2153TPT.A	PT	LQFP	48	250	10 x 25	150	315	135.9	7620	12.2	11.1	11.25
MSP430FR2153TPT.A	PT	LQFP	48	250	10 x 25	150	315	135.9	7620	12.2	11.1	11.25
MSP430FR2155TPT	PT	LQFP	48	250	10 x 25	150	315	135.9	7620	12.2	11.1	11.25
MSP430FR2155TPT	PT	LQFP	48	250	10 x 25	150	315	135.9	7620	12.2	11.1	11.25
MSP430FR2155TPT.A	PT	LQFP	48	250	10 x 25	150	315	135.9	7620	12.2	11.1	11.25
MSP430FR2155TPT.A	PT	LQFP	48	250	10 x 25	150	315	135.9	7620	12.2	11.1	11.25
MSP430FR2353TPT	PT	LQFP	48	250	10 x 25	150	315	135.9	7620	12.2	11.1	11.25
MSP430FR2353TPT	PT	LQFP	48	250	10 x 25	150	315	135.9	7620	12.2	11.1	11.25
MSP430FR2353TPT.A	PT	LQFP	48	250	10 x 25	150	315	135.9	7620	12.2	11.1	11.25
MSP430FR2353TPT.A	PT	LQFP	48	250	10 x 25	150	315	135.9	7620	12.2	11.1	11.25
MSP430FR2355TPT	PT	LQFP	48	250	10 x 25	150	315	135.9	7620	12.2	11.1	11.25
MSP430FR2355TPT	PT	LQFP	48	250	10 x 25	150	315	135.9	7620	12.2	11.1	11.25
MSP430FR2355TPT.A	PT	LQFP	48	250	10 x 25	150	315	135.9	7620	12.2	11.1	11.25
MSP430FR2355TPT.A	PT	LQFP	48	250	10 x 25	150	315	135.9	7620	12.2	11.1	11.25

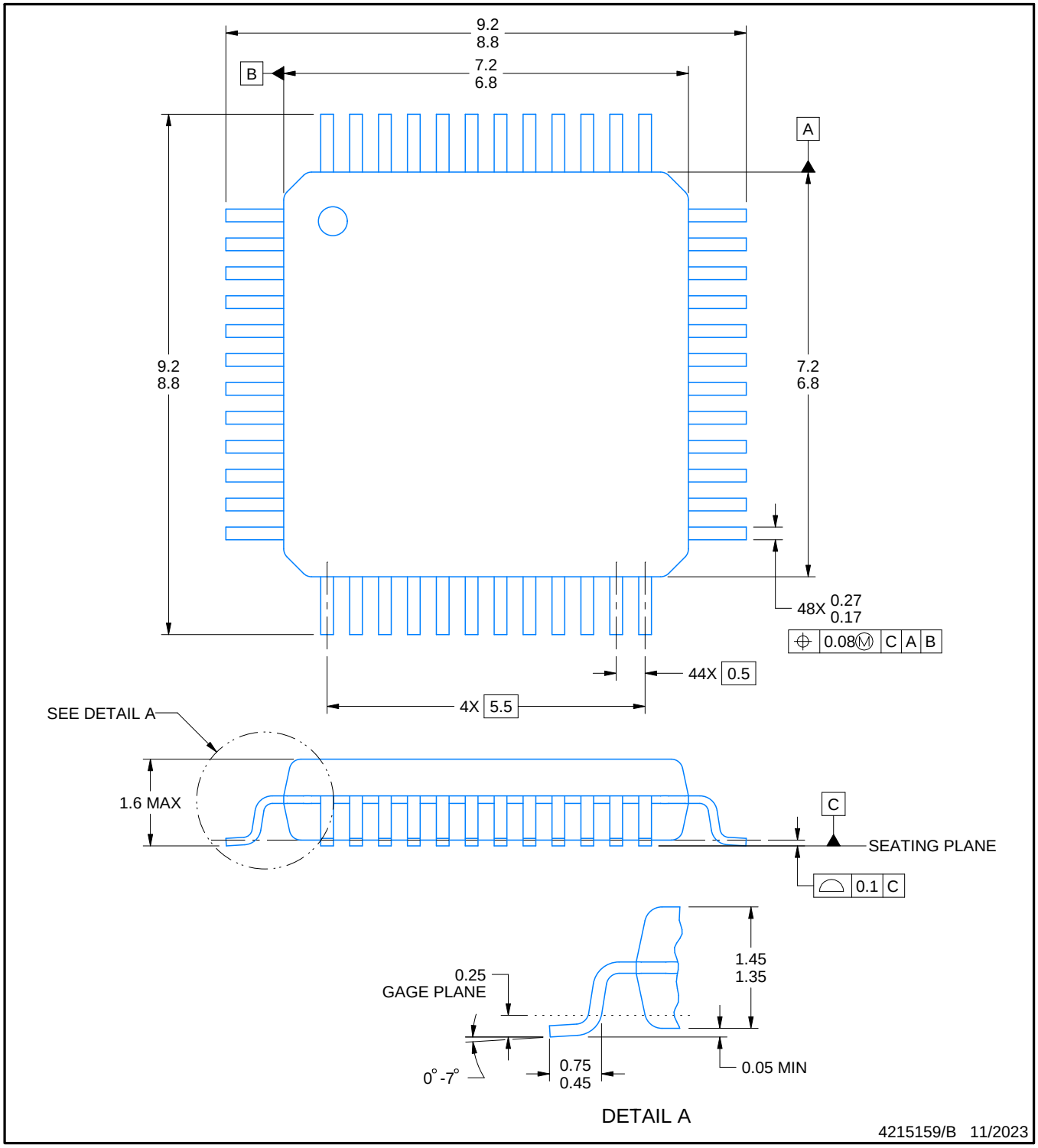

NOTES:

1. All linear dimensions are in millimeters. Any dimensions in parenthesis are for reference only. Dimensioning and tolerancing per ASME Y14.5M.
2. This drawing is subject to change without notice.
3. Reference JEDEC registration MS-026.
4. This may also be a thermally enhanced plastic package with leads conected to the die pads.

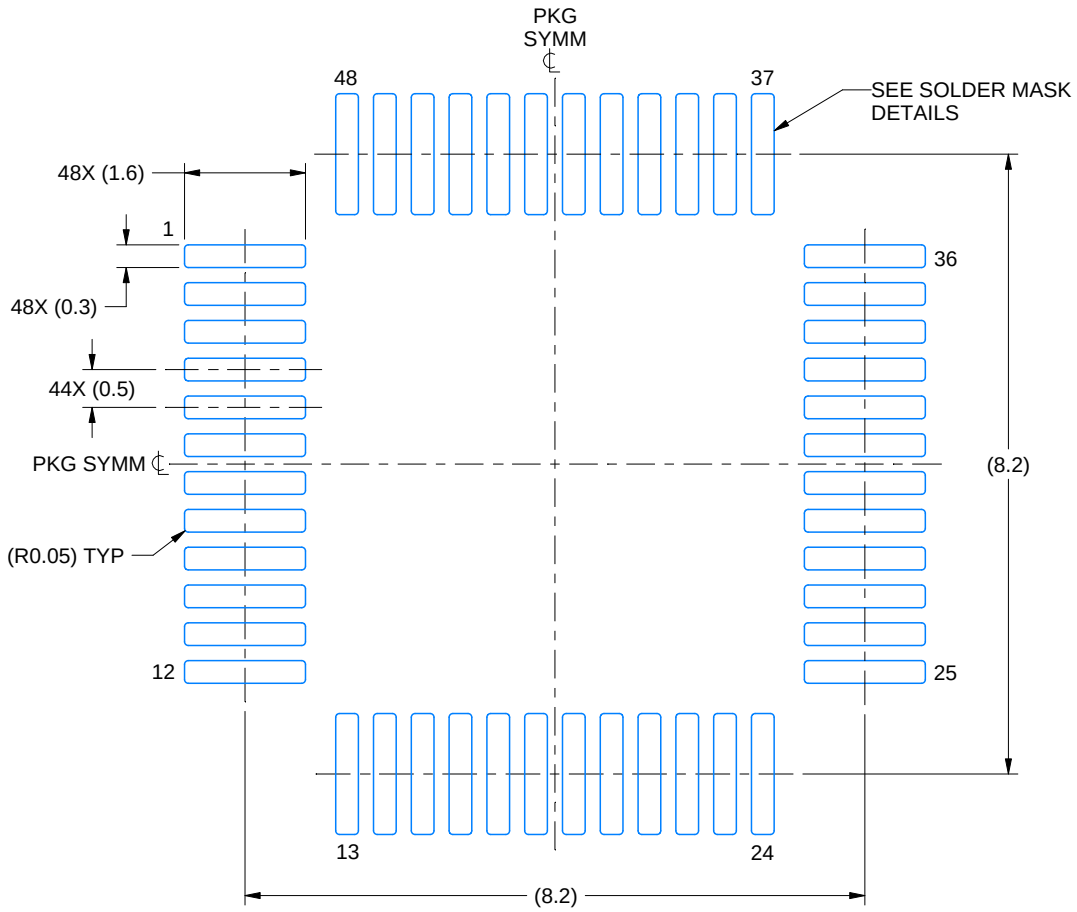

LAND PATTERN EXAMPLE
EXPOSED METAL SHOWN
SCALE 10.000

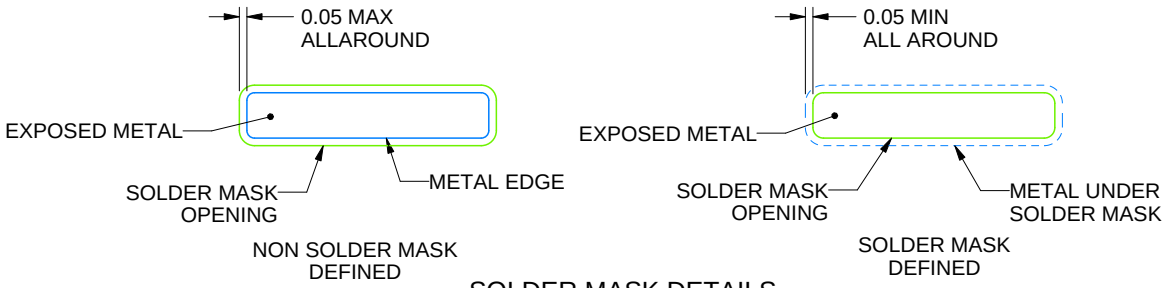

SOLDER MASK DETAILS

4215159/B 11/2023

NOTES: (continued)

5. Publication IPC-7351 may have alternate designs.
6. Solder mask tolerances between and around signal pads can vary based on board fabrication site.

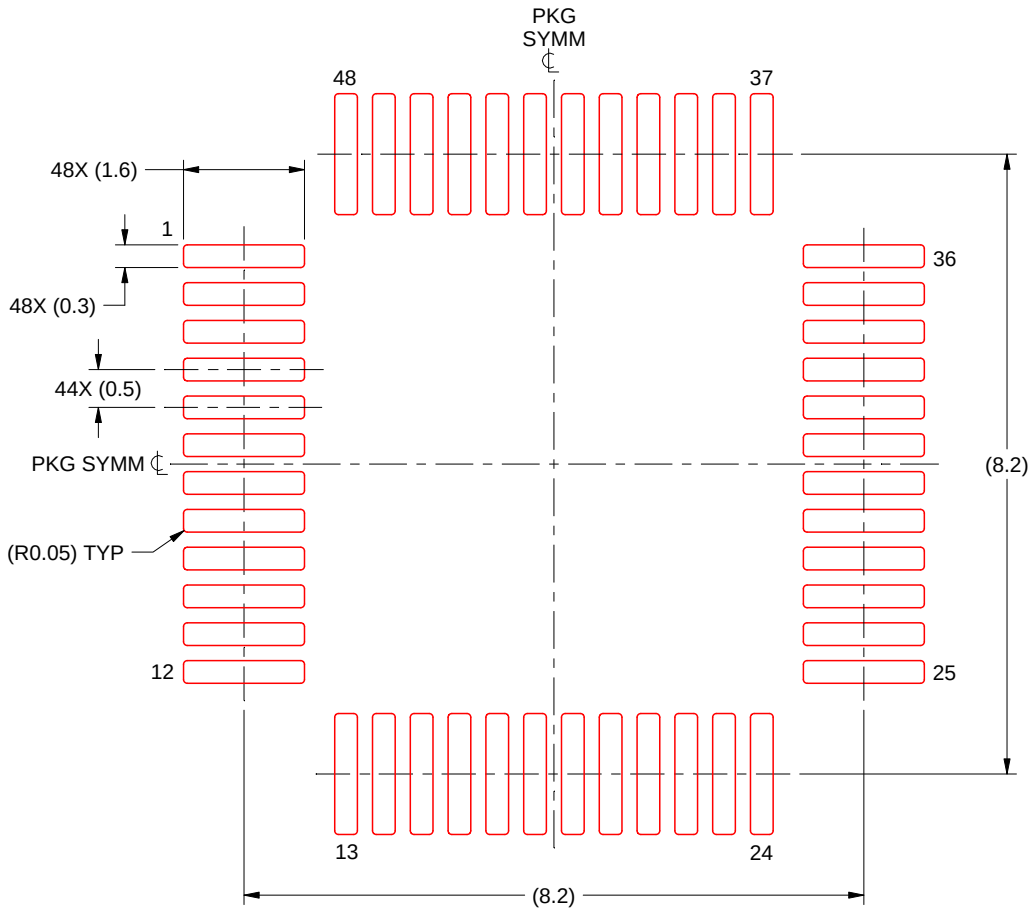

SOLDER PASTE EXAMPLE
BASED ON 0.1 mm THICK STENCIL
SCALE: 10X

4215159/B 11/2023

NOTES: (continued)

7. Laser cutting apertures with trapezoidal walls and rounded corners may offer better paste release. IPC-7525 may have alternate design recommendations.
8. Board assembly site may have different recommendations for stencil design.

GENERIC PACKAGE VIEW

RSM 32

VQFN - 1 mm max height

4 x 4, 0.4 mm pitch

PLASTIC QUAD FLATPACK - NO LEAD

This image is a representation of the package family, actual package may vary.
Refer to the product data sheet for package details.

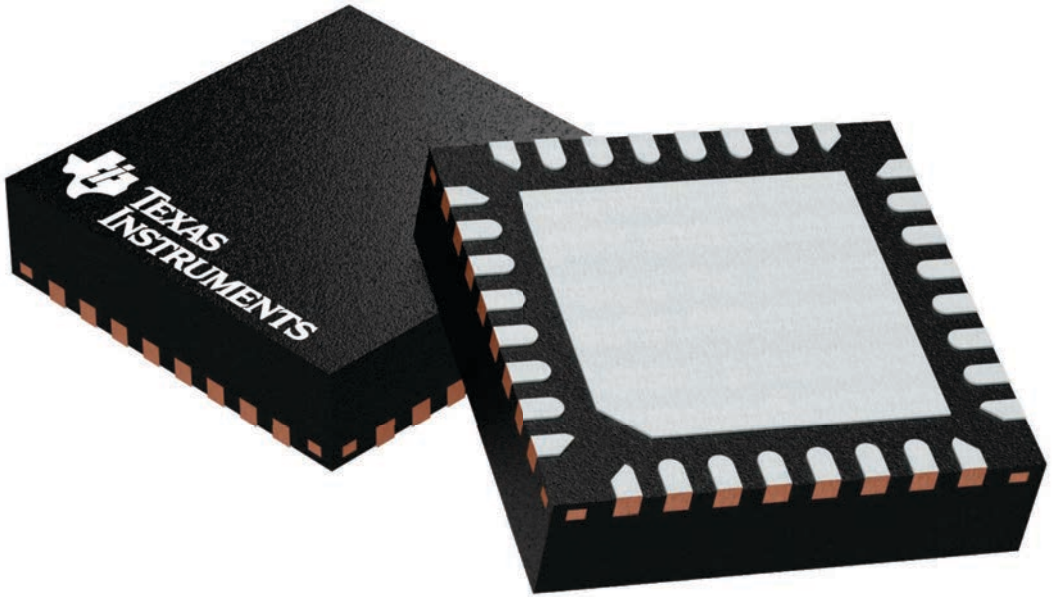

4224982/A

RSM0032B

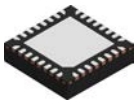

PACKAGE OUTLINE

VQFN - 1 mm max height

PLASTIC QUAD FLATPACK - NO LEAD

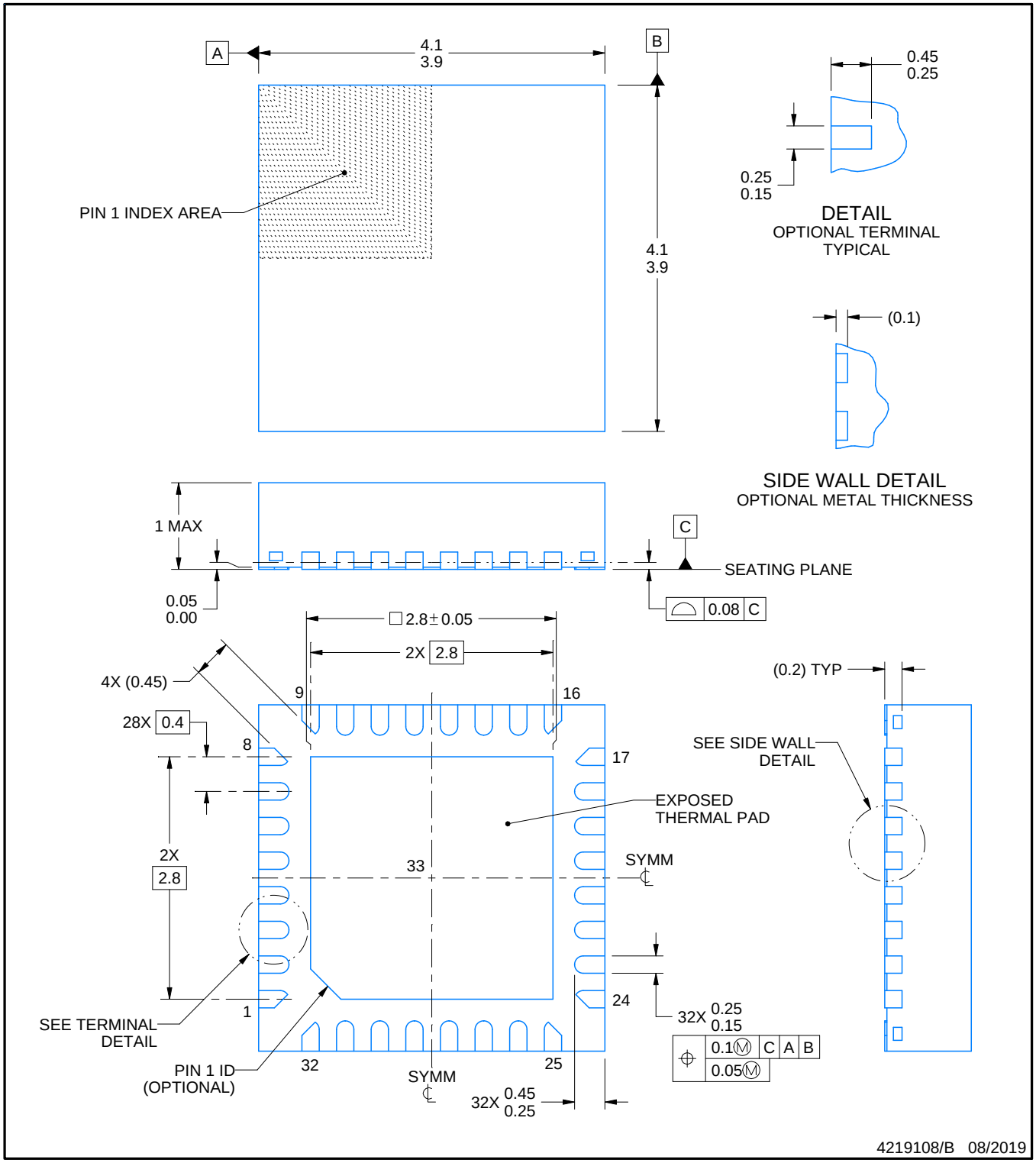

NOTES:

1. All linear dimensions are in millimeters. Any dimensions in parenthesis are for reference only. Dimensioning and tolerancing per ASME Y14.5M.
2. This drawing is subject to change without notice.
3. The package thermal pad must be soldered to the printed circuit board for thermal and mechanical performance.

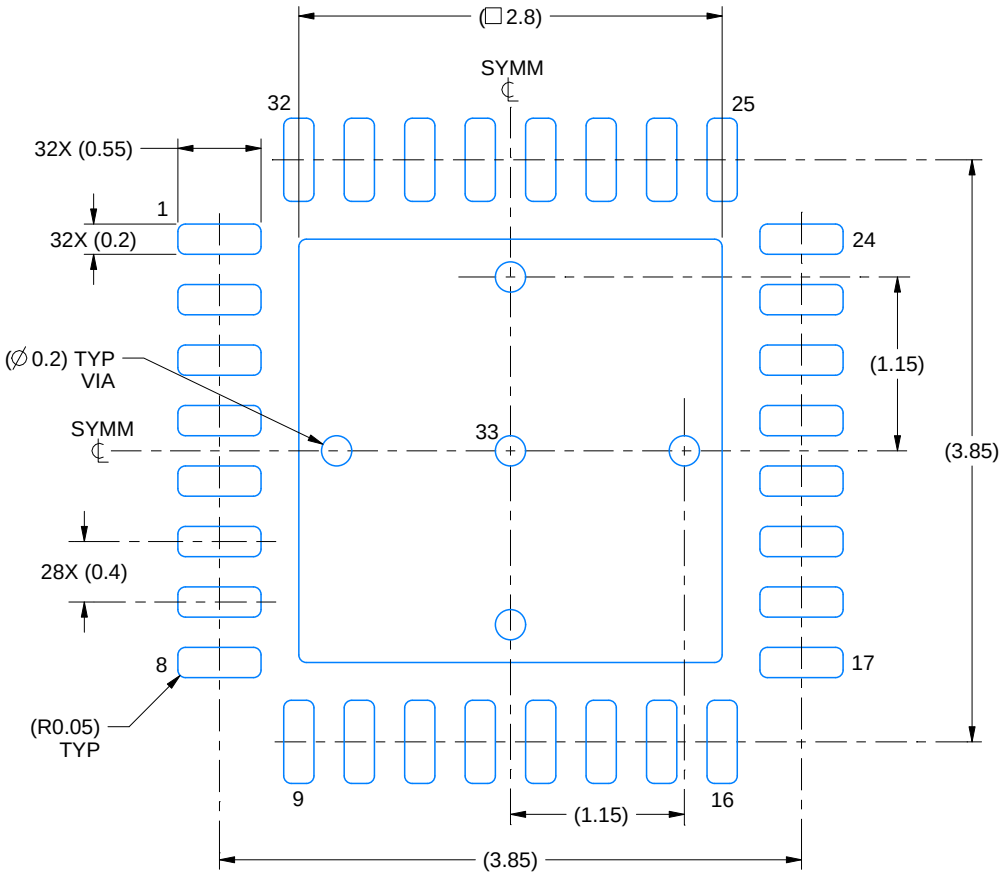

LAND PATTERN EXAMPLE
EXPOSED METAL SHOWN
SCALE:20X

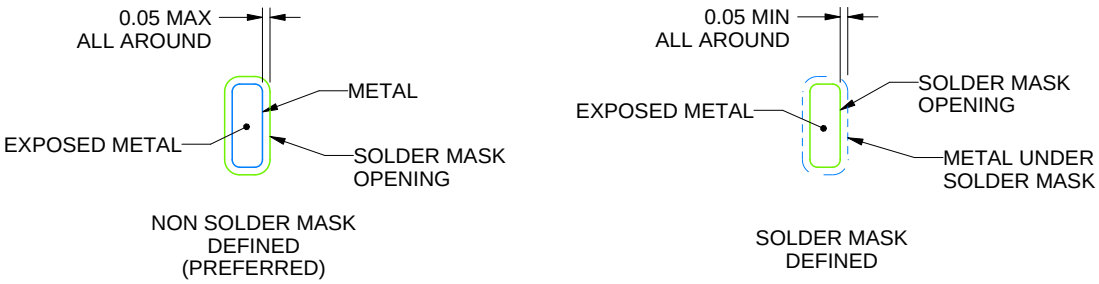

SOLDER MASK DETAILS

4219108/B 08/2019

NOTES: (continued)

4. This package is designed to be soldered to a thermal pad on the board. For more information, see Texas Instruments literature number SLUA271 (www.ti.com/lit/slua271).
5. Vias are optional depending on application, refer to device data sheet. If any vias are implemented, refer to their locations shown on this view. It is recommended that vias under paste be filled, plugged or tented.

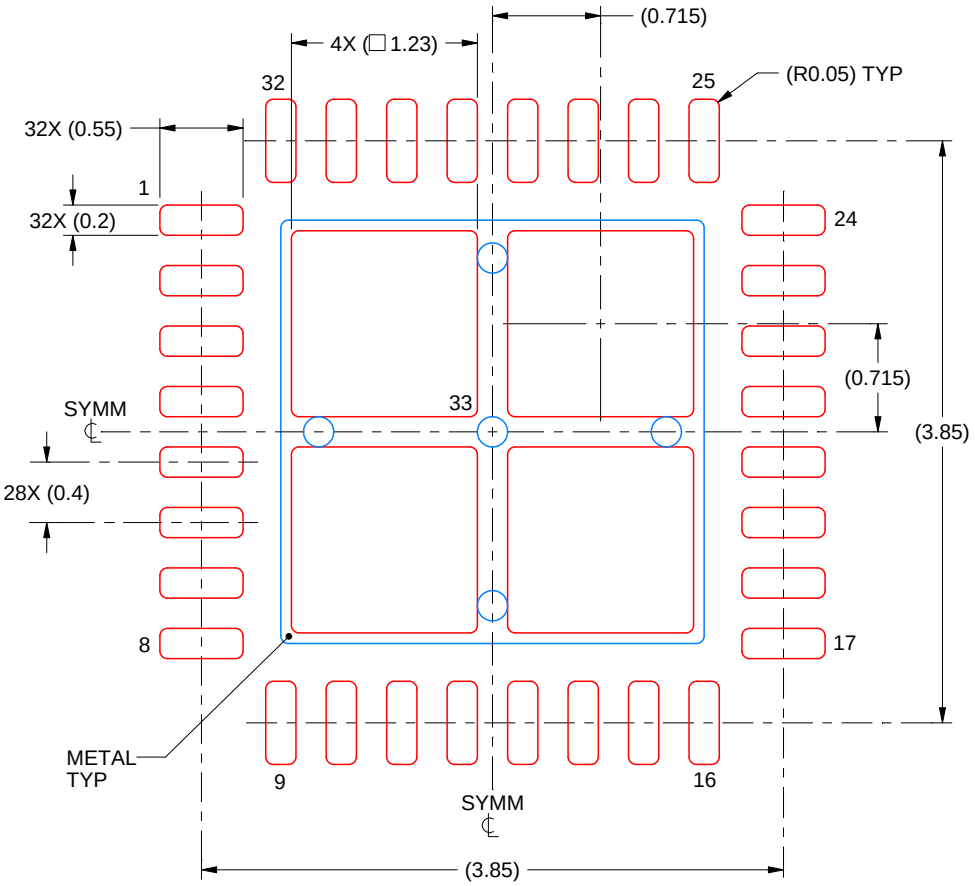

SOLDER PASTE EXAMPLE
BASED ON 0.1 mm THICK STENCIL

EXPOSED PAD 33:
77% PRINTED SOLDER COVERAGE BY AREA UNDER PACKAGE
SCALE:20X

4219108/B 08/2019

NOTES: (continued)

6. Laser cutting apertures with trapezoidal walls and rounded corners may offer better paste release. IPC-7525 may have alternate design recommendations.

DBT0038A

TSSOP - 1.2 mm max height

SMALL OUTLINE PACKAGE

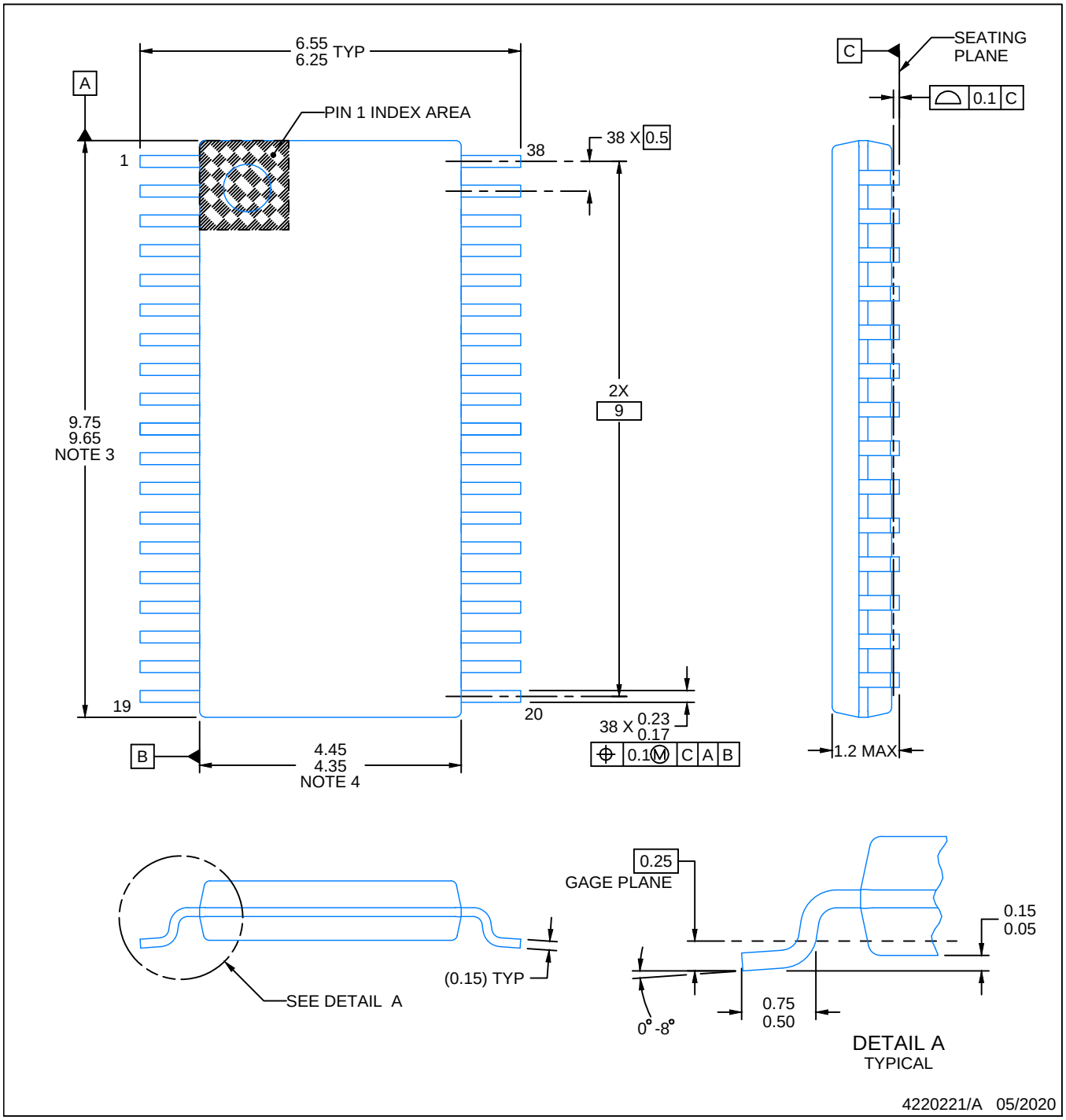

NOTES:

1. All linear dimensions are in millimeters. Any dimensions in parenthesis are for reference only. Dimensioning and tolerancing per ASME Y14.5M.
2. This drawing is subject to change without notice.
3. This dimension does not include mold flash, protrusions, or gate burrs. Mold flash, protrusions, or gate burrs shall not exceed 0.15 mm per side.
4. This dimension does not include interlead flash. Interlead flash shall not exceed 0.25 mm per side.
5. Reference JEDEC registration MO-153.

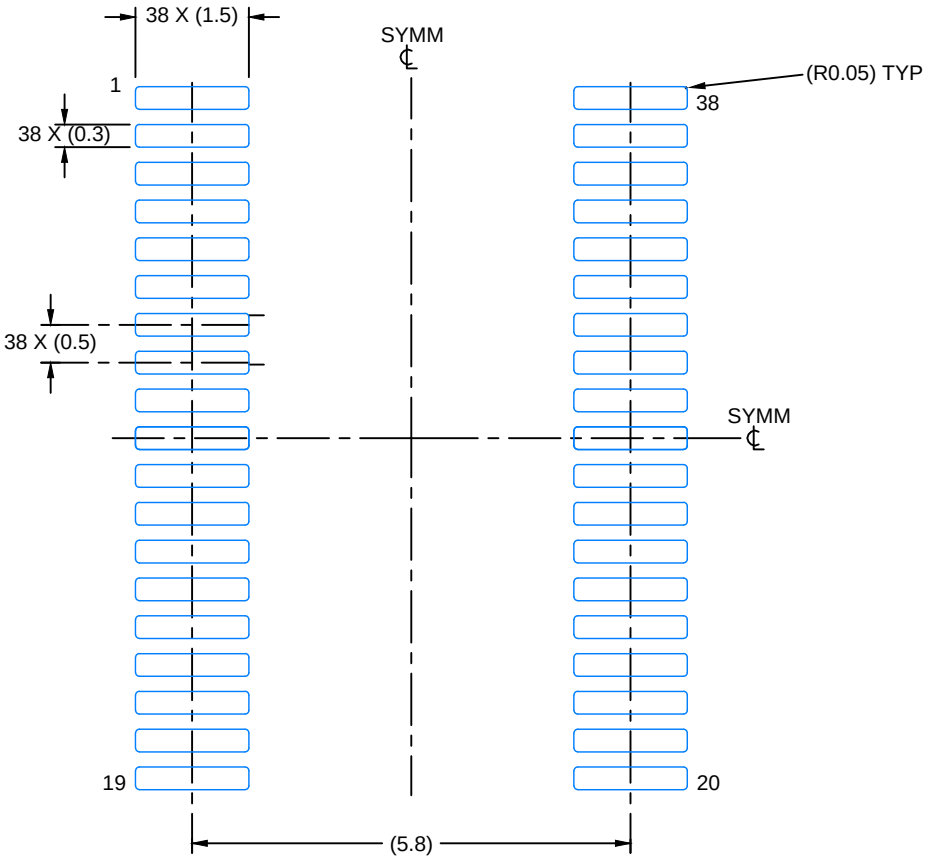

LAND PATTERN EXAMPLE
EXPOSED METAL SHOWN
SCALE: 10X

SOLDER MASK DETAILS

4220221/A 05/2020

NOTES: (continued)

6. Publication IPC-7351 may have alternate designs.
7. Solder mask tolerances between and around signal pads can vary based on board fabrication site.

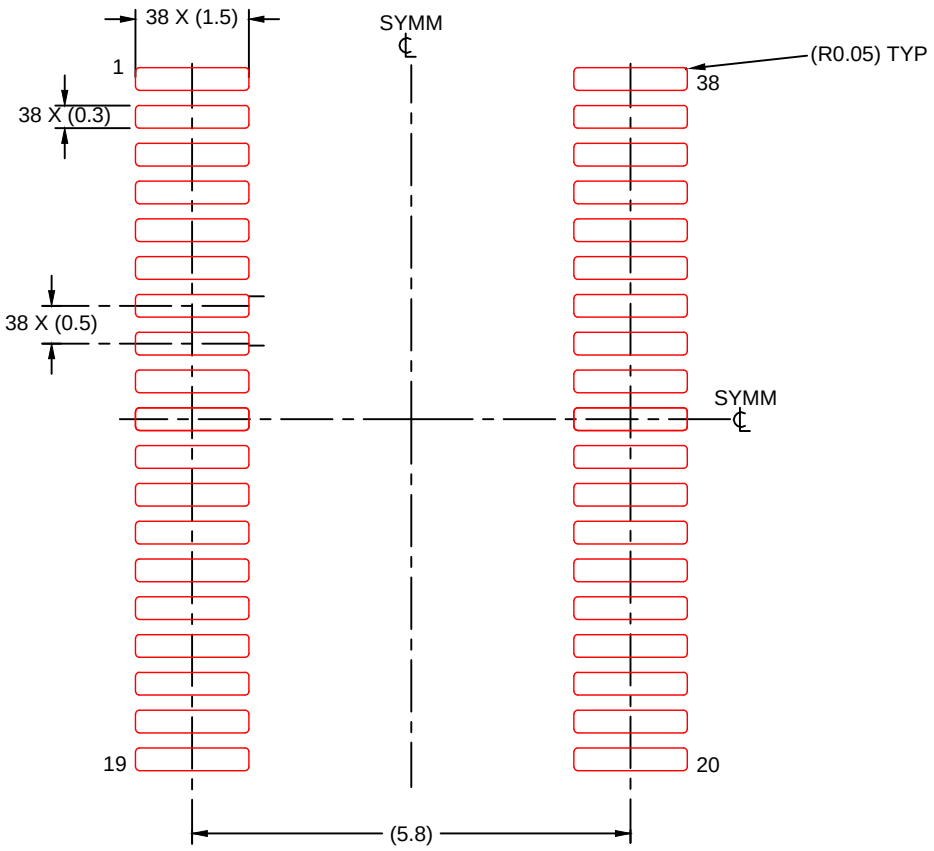

SOLDER PASTE EXAMPLE
BASED ON 0.125 mm THICK STENCIL
SCALE: 10X

4220221/A 05/2020

NOTES: (continued)

8. Laser cutting apertures with trapezoidal walls and rounded corners may offer better paste release. IPC-7525 may have alternate design recommendations.
9. Board assembly site may have different recommendations for stencil design.

GENERIC PACKAGE VIEW

RHA 40

VQFN - 1 mm max height

6 x 6, 0.5 mm pitch

PLASTIC QUAD FLATPACK - NO LEAD

This image is a representation of the package family, actual package may vary.
Refer to the product data sheet for package details.

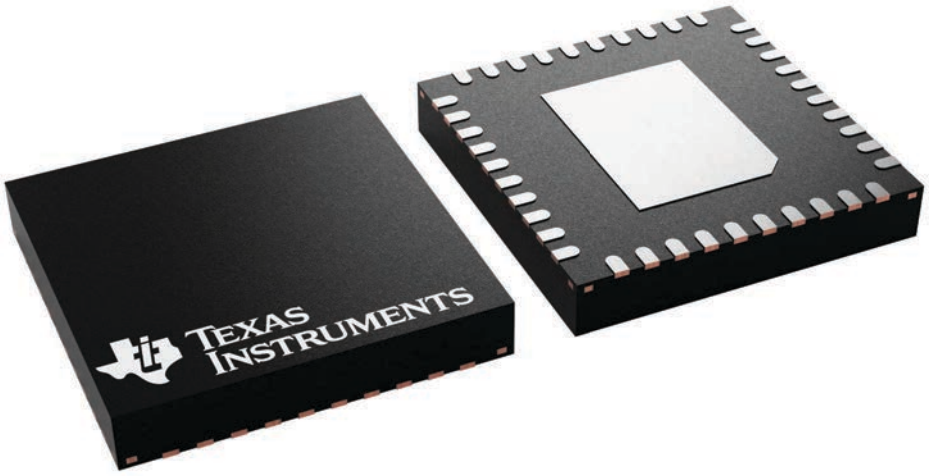

4225870/A

PACKAGE OUTLINE

RHA0040E

VQFN - 1 mm max height

PLASTIC QUAD FLATPACK - NO LEAD

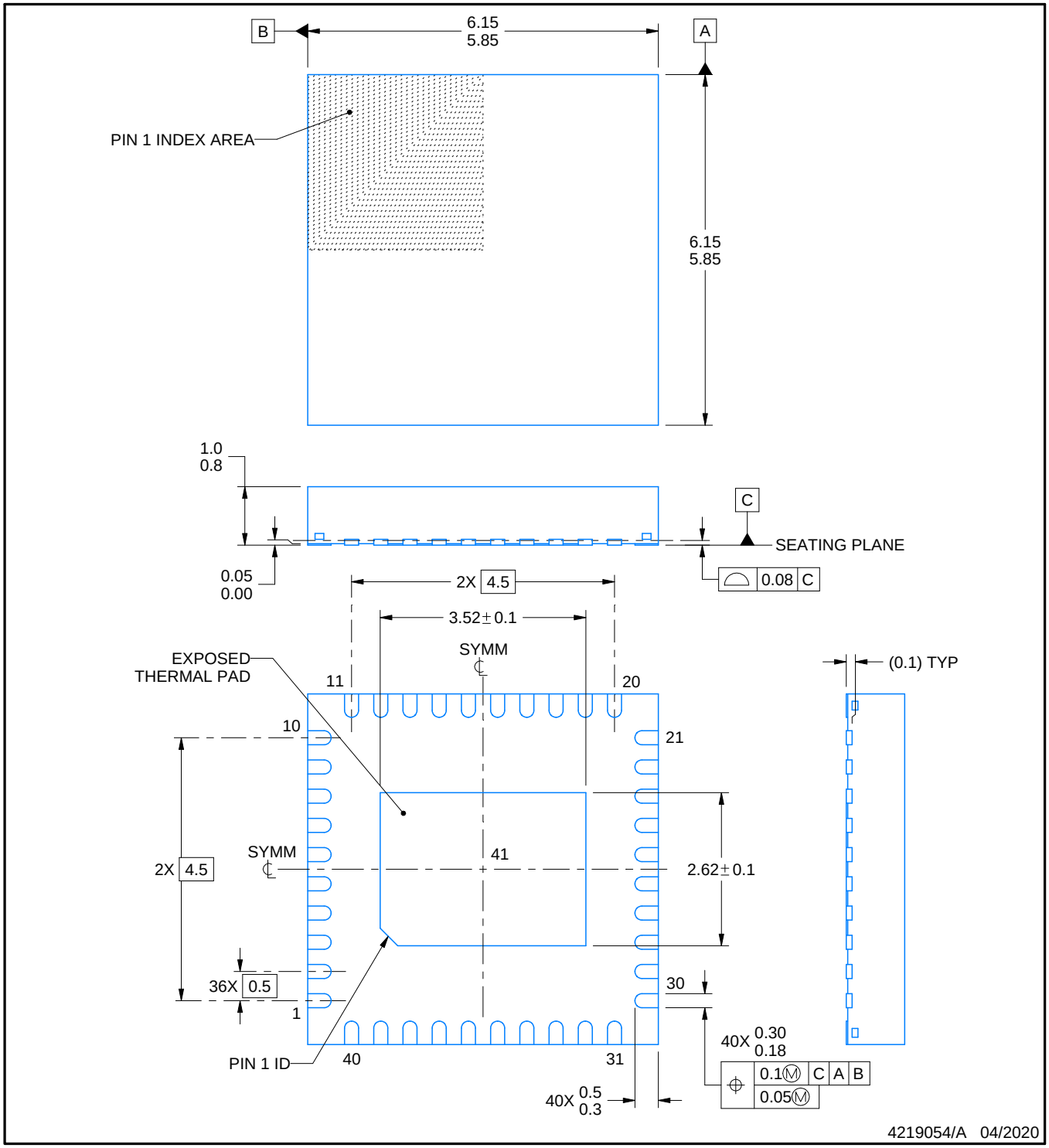

NOTES:

1. All linear dimensions are in millimeters. Any dimensions in parenthesis are for reference only. Dimensioning and tolerancing per ASME Y14.5M.
2. This drawing is subject to change without notice.
3. The package thermal pad must be soldered to the printed circuit board for thermal and mechanical performance.

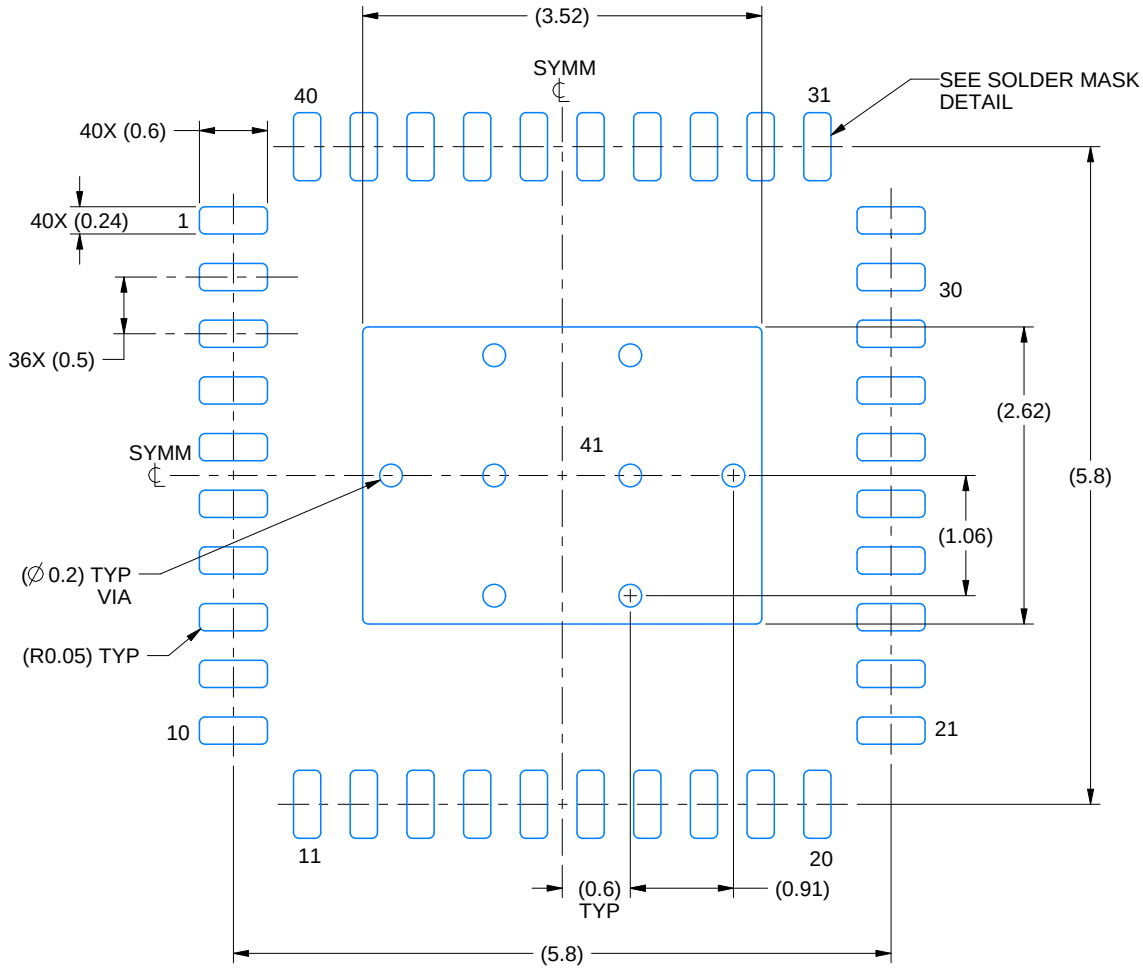

LAND PATTERN EXAMPLE
EXPOSED METAL SHOWN
SCALE: 15X

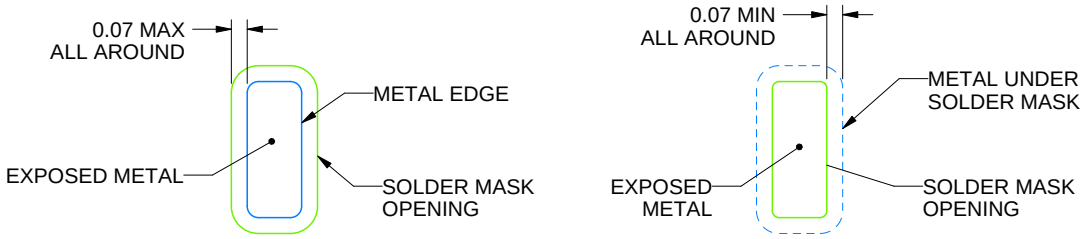

NON SOLDER MASK DEFINED (PREFERRED)

SOLDER MASK DEFINED

SOLDER MASK DETAILS

4219054/A 04/2020

NOTES: (continued)

4. This package is designed to be soldered to a thermal pad on the board. For more information, see Texas Instruments literature number SLUA271 (www.ti.com/lit/slua271).
5. Vias are optional depending on application, refer to device data sheet. If any vias are implemented, refer to their locations shown on this view. It is recommended that vias under paste be filled, plugged or tented.

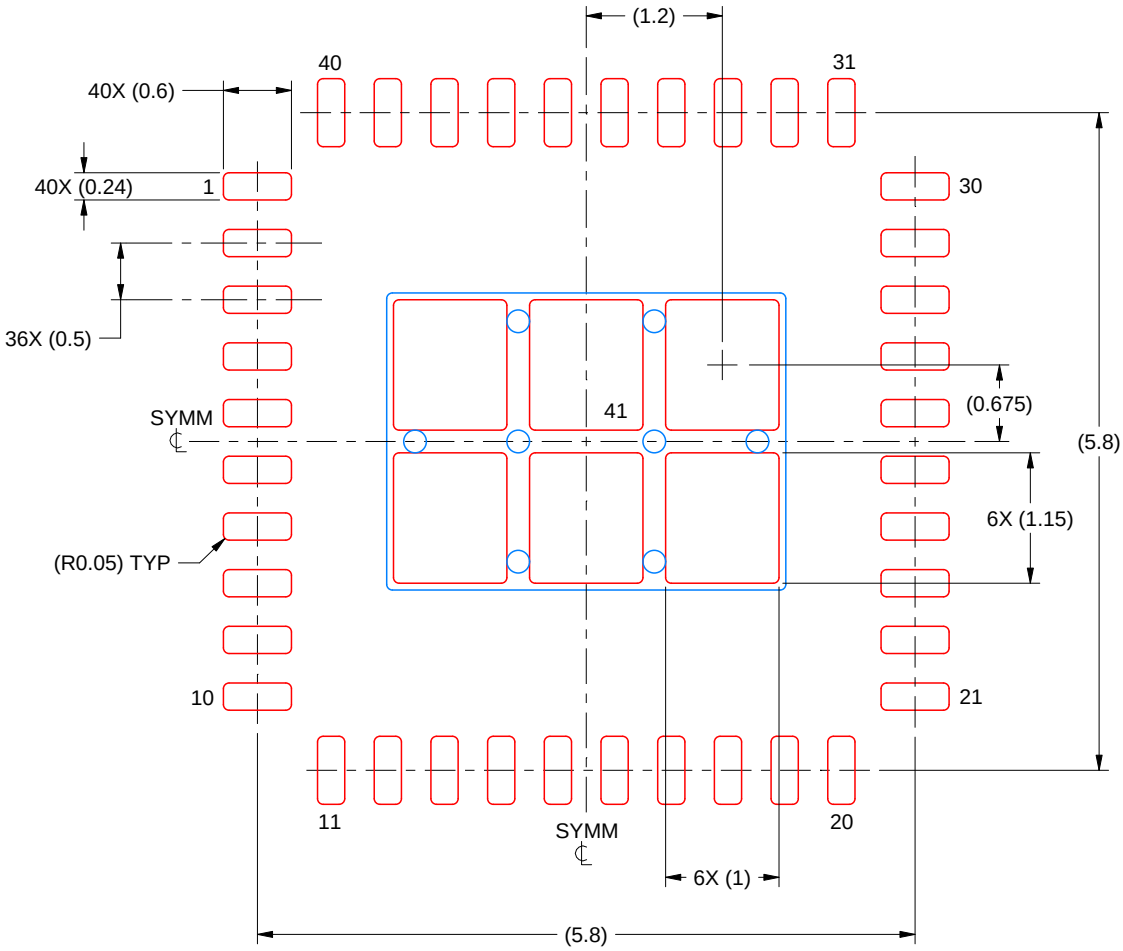

SOLDER PASTE EXAMPLE
BASED ON 0.125 MM THICK STENCIL
SCALE: 15X

EXPOSED PAD 41
75% PRINTED SOLDER COVERAGE BY AREA UNDER PACKAGE

4219054/A 04/2020

NOTES: (continued)

6. Laser cutting apertures with trapezoidal walls and rounded corners may offer better paste release. IPC-7525 may have alternate design recommendations.

重要なお知らせと免責事項

テキサス· インスツルメンツは、技術データと信頼性データ (データシートを含みます)、設計リソース (リファレンス デザインを含みます)、アプリケーションや設計に関する各種アドバイス、Web ツール、安全性情報、その他のリソースを、欠陥が存在する可能性のある「現状のまま」提供しており、商品性および特定目的に対する適合性の黙示保証、第三者の知的財産権の非侵害保証を含むいかなる保証も、明示的または黙示的にかかわらず拒否します。

これらのリソースは、 テキサス· インスツルメンツ製品を使用する設計の経験を積んだ開発者への提供を意図したものです。(1) お客様のアプリケーションに適した テキサス· インスツルメンツ製品の選定、(2) お客様のアプリケーションの設計、検証、試験、(3) お客様のアプリケーションに該当する各種規格や、その他のあらゆる安全性、セキュリティ、規制、または他の要件への確実な適合に関する責任を、お客様のみが単独で負うものとします。

上記の各種リソースは、予告なく変更される可能性があります。これらのリソースは、リソースで説明されている テキサス· インスツルメンツ製品を使用するアプリケーションの開発の目的でのみ、 テキサス· インスツルメンツはその使用をお客様に許諾します。これらのリソースに関して、他の目的で複製することや掲載することは禁止されています。 テキサス· インスツルメンツや第三者の知的財産権のライセンスが付与されている訳ではありません。お客様は、これらのリソースを自身で使用した結果発生するあらゆる申し立て、損害、費用、損失、責任について、 テキサス· インスツルメンツおよびその代理人を完全に補償するものとし、 テキサス· インスツルメンツは一切の責任を拒否します。

テキサス· インスツルメンツの製品は、 テキサス· インスツルメンツの販売条件、または ti.com やかかる テキサス· インスツルメンツ製品の関連資料などのいずれかを通じて提供する適用可能な条項の下で提供されています。 テキサス· インスツルメンツがこれらのリソースを提供することは、適用される テキサス· インスツルメンツの保証または他の保証の放棄の拡大や変更を意味するものではありません。

お客様がいかなる追加条項または代替条項を提案した場合でも、 テキサス· インスツルメンツはそれらに異議を唱え、拒否します。

郵送先住所：Texas Instruments, Post Office Box 655303, Dallas, Texas 75265
Copyright © 2025, Texas Instruments Incorporated