MSP430F643x ミクスト・シグナル・マイクロコントローラ

1 特長

- 低い電源電圧範囲:1.8V～3.6V
- 超低消費電力
  - アクティブ・モード (AM):
    すべてのシステム・クロックがアクティブ:
    270µA/MHz (8MHz、3.0V)、フラッシュ・プログラム実行時 (標準値)
  - スタンバイ・モード(LPM3):
    ウォッチドッグ (水晶振動子を使用)、電源スーパーバイザが動作、すべての RAM を保持、高速ウェークアップ:
    1.8µA (2.2V)、2.1µA (3.0V) (標準値)
  - シャットダウン・リアルタイム・クロック(RTC)モード (LPM3.5) :
    シャットダウン・モード、RTC (水晶振動子を使用) が動作:
    1.1µA (3.0V) (標準値)
  - シャットダウン・モード (LPM4.5):
    0.3µA (3.0V) (標準値)
- スタンバイ・モードから 3µs (標準値) でウェークアップ
- 16 ビット RISC アーキテクチャ、拡張メモリ、最大 20MHz のシステム・クロック
- 柔軟な電力管理システム
  - プログラム可能な、レギュレートされたコア電源電圧を持つ、完全に統合された LDO
  - 電源電圧の管理、監視、およびブラウンアウト
- 統合クロック・システム
  - FLL 制御ループによる周波数安定化
  - 低電力、低周波数の内部クロック・ソース (VLO)
  - 調整済みの低周波数内部基準源 (REFO)
  - 32kHz の水晶振動子 (XT1)
  - 最高 32MHz の高周波数水晶振動子(XT2)
- 4 個の 16 ビット・タイマと 3、5、または 7 個のキャプチャ/ 比較レジスタ
- 2 つのユニバーサル・シリアル通信インターフェイス (USCI)
  - USCI_A0、USCI_A1 がそれぞれ次の機能をサポート:
    - 自動ボーレート検出機能付きの拡張 UART
    - IrDA エンコーダおよびデコーダ
    - 同期 SPI
  - USCI_B0、USCI_B1 がそれぞれ次の機能をサポート:
    - I^2C
    - 同期 SPI
- 3.3V 電源システム内蔵
- 共有基準電圧、サンプル・アンド・ホールド、自動スキャン機能を内蔵した 12 ビット A/D コンバータ(ADC)
- 同期機能付きの 2 つの 12 ビット D/A コンバータ (DAC)
- 電圧コンパレータ
- コントラスト制御を搭載し、最大 160 セグメントに対応する内蔵 LCD ドライバ
- ハードウェア乗算器で 32 ビットの演算をサポート
- シリアルのオンボード・プログラミング、外部のプログラミング電圧不要
- 6 チャネルの内蔵 DMA
- 電源電圧バックアップ・スイッチ付きの RTC モジュール
- 「デバイスの比較」に、提供しているファミリ製品をまとめています。

2 アプリケーション

- アナログおよびデジタル・センサ・システム
- デジタル・モーター制御
- リモート・コントロール
- サーモスタット
- デジタル・タイマ
- ハンドヘルド・メータ

3 概要

TI MSP 430™ ファミリの超低消費電力マイクロコントローラは複数のデバイスで構成され、それぞれが各種のアプリケーションを対象とする異なるペリフェラルを搭載しています。このアーキテクチャは 5 つの低消費電力モードを持ち、携帯用測定器用途でバッテリ駆動時間を延長するよう最適化されています。このデバイスには、強力な 16 ビット RISC CPU、16 ビット・レジスタ、および定数ジェネレータが搭載されており、コード効率が最大限に発揮されます。デジタル制御発振器 (DCO) により、低消費電力モードからアクティブ・モードへ 3µs (標準値) でウェークアップできます。

MSP430F643x は、3.3V LDO、高性能 12 ビット ADC、コンパレータ、2 つの USCI、ハードウェア乗算器、DMA、4 つの 16 ビット・タイマ、アラーム機能付き RTC モジュール、LCD ドライバ、最大 74 本 の I/O ピンを搭載したマイクロコントローラです。

モジュールの完全な説明については、『MSP430F5xx および MSP430F6xx ファミリ・ユーザー・ガイド』を参照してください。

英語版の TI 製品についての情報を翻訳したこの資料は、製品の概要を確認する目的で便宜的に提供しているものです。該当する正式な英語版の最新情報は、www.ti.com で閲覧でき、その内容が常に優先されます。TI では翻訳の正確性および妥当性につきましては一切保証いたしません。実際の設計などの前には、必ず最新版の英語版をご参照くださいますようお願いいたします。

製品情報

部品番号(1)	パッケージ	本体サイズ(2)
MSP430F6438IPZ	LQFP (100)	14mm × 14mm
MSP430F6438IZCA	nFBGA (113)	7mm × 7mm
MSP430F6438IZQW(3)	MicroStar Junior™ BGA (113)	7mm × 7mm

(1) 最新のデバイス、パッケージ、および注文情報については、セクション 11 の「*付録: パッケージ・オプション*」または、www.tij.co.jp の TI Web サイトを参照してください。
(2) ここに記載されているサイズは概略です。許容公差を含めたパッケージの寸法については、セクション 11 の「*メカニカル・データ*」を参照してください。
(3) ZQW (MicroStar Junior BGA) パッケージのすべての注文可能な部品番号が「最終購入」のステータスに変更されました。このステータスの詳細については、製品ライフサイクルのページを参照してください。

Copyright © 2021 Texas Instruments Incorporated

4 機能ブロック図

図 4-1 に MSP430F6438、MSP430F6436 の機能ブロック図を示します。

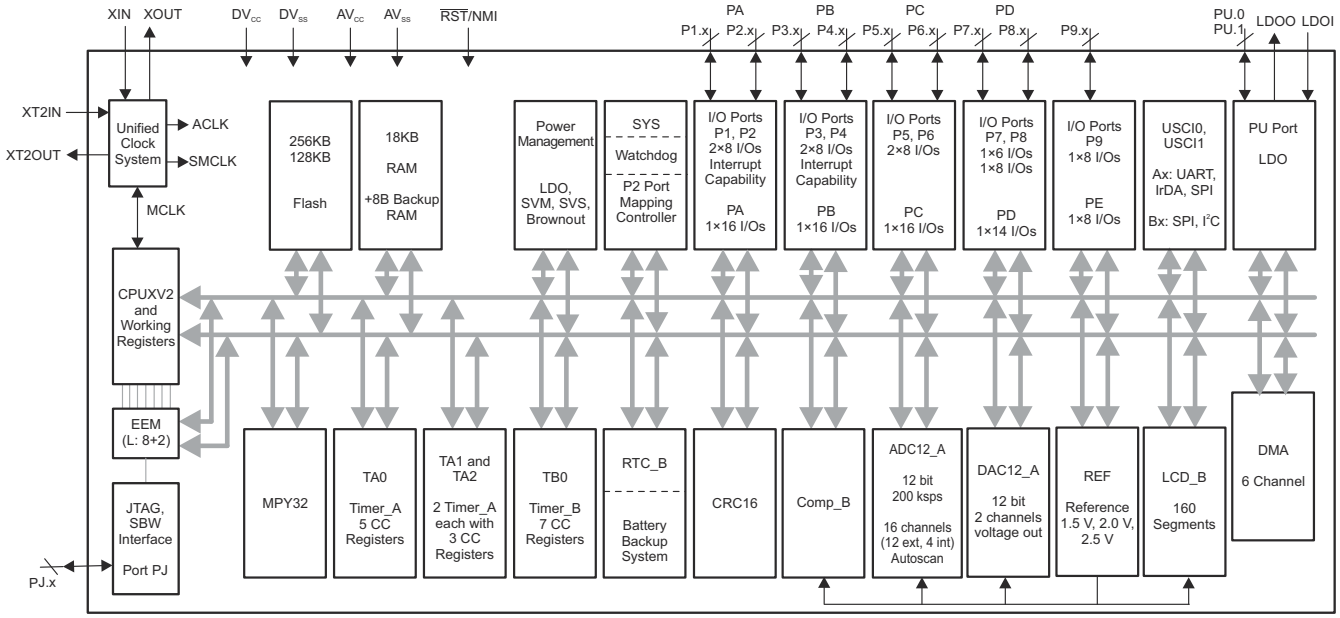

図 4-1. 機能ブロック図 – MSP430F6438、MSP430F6436

図 4-2 に MSP430F6435、MSP430F6433 の機能ブロック図を示します。

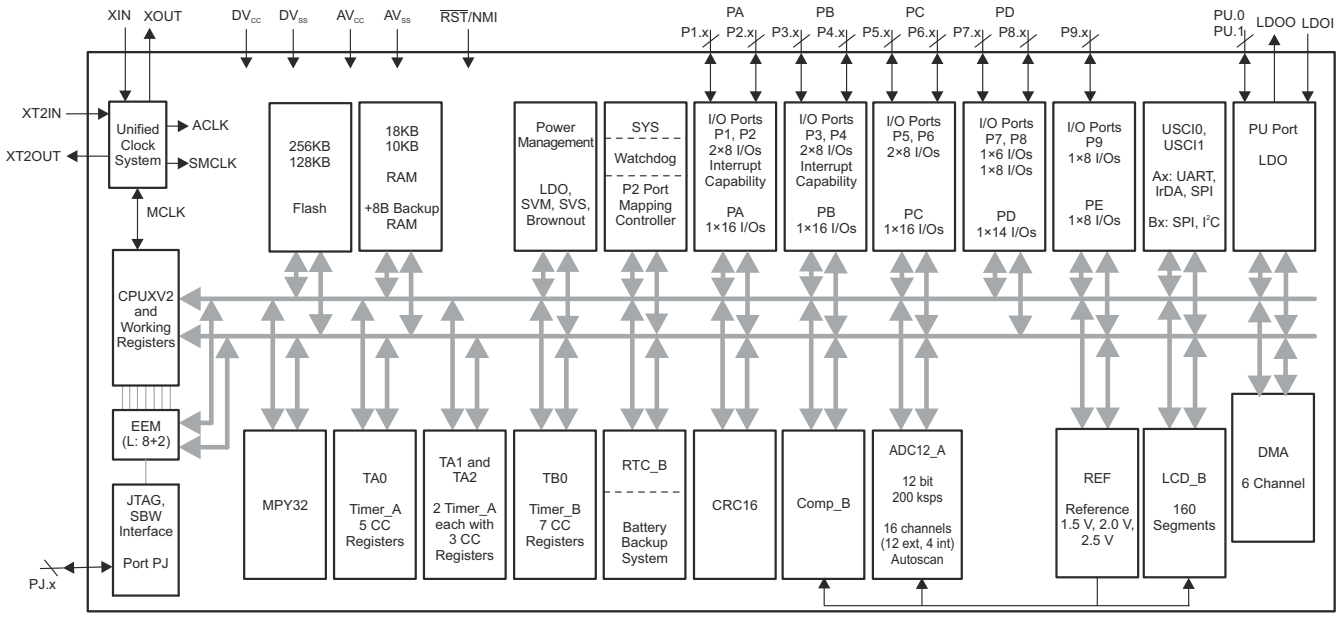

図 4-2. 機能ブロック図 – MSP430F6435、MSP430F6433

Table of Contents

1 特長 ... 1
2 アプリケーション ... 1
3 概要 ... 1
4 機能ブロック図 ... 3
5 Revision History ... 5
6 Device Comparison ... 7
6.1 Related Products ... 7
7 Terminal Configuration and Functions ... 8
7.1 Pin Diagrams ... 8
7.2 Signal Descriptions ... 11
8 Specifications ... 17
8.1 Absolute Maximum Ratings ... 17
8.2 ESD Ratings ... 17
8.3 Recommended Operating Conditions ... 17
8.4 Active Mode Supply Current Into V_{CC} Excluding External Current ... 19
8.5 Low-Power Mode Supply Currents (Into V_{CC}) Excluding External Current ... 19
8.6 Low-Power Mode With LCD Supply Currents (Into V_{CC}) Excluding External Current ... 21
8.7 Thermal Resistance Characteristics ... 21
8.8 Schmitt-Trigger Inputs – General-Purpose I/O ... 22
8.9 Inputs – Ports P1, P2, P3, and P4 ... 22
8.10 Leakage Current – General-Purpose I/O ... 22
8.11 Outputs – General-Purpose I/O (Full Drive Strength) ... 22
8.12 Outputs – General-Purpose I/O (Reduced Drive Strength) ... 23
8.13 Output Frequency – Ports P1, P2, and P3 ... 23
8.14 Typical Characteristics – Outputs, Reduced Drive Strength (PxDS.y = 0) ... 24
8.15 Typical Characteristics – Outputs, Full Drive Strength (PxDS.y = 1) ... 25
8.16 Crystal Oscillator, XT1, Low-Frequency Mode ... 26
8.17 Crystal Oscillator, XT2 ... 27
8.18 Internal Very-Low-Power Low-Frequency Oscillator (VLO) ... 28
8.19 Internal Reference, Low-Frequency Oscillator (REFO) ... 28
8.20 DCO Frequency ... 29
8.21 PMM, Brownout Reset (BOR) ... 30
8.22 PMM, Core Voltage ... 30
8.23 PMM, SVS High Side ... 31
8.24 PMM, SVM High Side ... 31
8.25 PMM, SVS Low Side ... 32
8.26 PMM, SVM Low Side ... 32
8.27 Wake-up Times From Low-Power Modes and Reset ... 32
8.28 Timer_A, Timers TA0, TA1, and TA2 ... 33
8.29 Timer_B, Timer TB0 ... 33
8.30 Battery Backup ... 34
8.31 USCI (UART Mode) ... 35
8.32 USCI (SPI Master Mode) ... 35
8.33 USCI (SPI Slave Mode) ... 37
8.34 USCI (I^2C Mode) ... 39
8.35 LCD_B, Recommended Operating Conditions ... 40
8.36 LCD_B, Electrical Characteristics ... 41
8.37 12-Bit ADC, Power Supply and Input Range Conditions ... 42
8.38 12-Bit ADC, Timing Parameters ... 42
8.39 12-Bit ADC, Linearity Parameters Using an External Reference Voltage ... 43
8.40 12-Bit ADC, Linearity Parameters Using AVCC as Reference Voltage ... 43
8.41 12-Bit ADC, Linearity Parameters Using the Internal Reference Voltage ... 43
8.42 12-Bit ADC, Temperature Sensor and Built-In V_{MID} ... 44
8.43 REF, External Reference ... 45
8.44 REF, Built-In Reference ... 46
8.45 12-Bit DAC, Supply Specifications ... 47
8.46 12-Bit DAC, Linearity Specifications ... 48
8.47 12-Bit DAC, Output Specifications ... 49
8.48 12-Bit DAC, Reference Input Specifications ... 50
8.49 12-Bit DAC, Dynamic Specifications ... 50
8.50 12-Bit DAC, Dynamic Specifications (Continued) ... 51
8.51 Comparator_B ... 52
8.52 Ports PU.0 and PU.1 ... 53
8.53 LDO-PWR (LDO Power System) ... 54
8.54 Flash Memory ... 55
8.55 JTAG and Spy-Bi-Wire Interface ... 55
9 Detailed Description ... 56
9.1 Overview ... 56
9.2 CPU ... 56
9.3 Instruction Set ... 57
9.4 Operating Modes ... 58
9.5 Interrupt Vector Addresses ... 59
9.6 Memory ... 60
9.7 Bootloader (BSL) ... 60
9.8 JTAG Operation ... 61
9.9 Flash Memory ... 61
9.10 RAM ... 62
9.11 Backup RAM ... 62
9.12 Peripherals ... 62
9.13 Input/Output Diagrams ... 84
9.14 Device Descriptors ... 107
10 Device and Documentation Support ... 108
10.1 Getting Started and Next Steps ... 108
10.2 Device Nomenclature ... 108
10.3 Tools and Software ... 110
10.4 Documentation Support ... 112
10.5 Related Links ... 114
10.6 サポート・リソース ... 114
10.7 Trademarks ... 114
10.8 静電気放電に関する注意事項 ... 114
10.9 Export Control Notice ... 114
10.10 用語集 ... 114
11 Mechanical, Packaging, and Orderable Information ... 115

Copyright © 2021 Texas Instruments Incorporated

5 Revision History

資料番号末尾の英字は改訂を表しています。その改訂履歴は英語版に準じています。

Changes from revision E to revision F

Changes from September 18, 2018 to September 10, 2020	Page
• 文書全体にわたってセクション、表、図、相互参照の採番方法を更新	1
• 文書全体にわたって nFBGA パッケージ (ZCA) の情報を追加	1
• Removed package options that are no longer available in 表 6-1, *Device Comparison* (MSP430F6436 in ZQW)	7
• Updated the list of devices available in the 113-Pin ZQW package in the caption of 図 7-3	8
• Changed the MAX value of the I_{ERASE} and I_{MERASE}, I_{BANK} parameters in セクション 8.54, *Flash Memory*	55
• Corrected the connection of the P7SEL.x signal in 図 9-11, *Port P7 (P7.4 to P7.7) Diagram*	98

Changes from revision D to revision E

Changes from December 9, 2015 to September 17, 2018	Page
• Added セクション 6.1, *Related Products*	7
• Added typical conditions statements at the beginning of セクション 8, *Specifications*	17
• Changed the MIN value of the $V_{(DVCC_BOR_hys)}$ parameter from 60 mV to 50 mV in セクション 8.21, *PMM, Brownout Reset (BOR)*	30
• Updated notes (1) and (2) and added note (3) in セクション 8.27, *Wake-up Times From Low-Power Modes and Reset*	32
• Removed ADC12DIV from the formula for the TYP value in the second row of the $t_{CONVERT}$ parameter in セクション 8.38, *12-Bit ADC, Timing Parameters*, because ADC12CLK is after division	42
• Removed the note that started "This impedance depends on..." from the "Reference input resistance" parameter in セクション 8.48, *12-Bit DAC, Reference Input Specifications*	50
• Added second row for t_{EN_CMP} with Test Conditions of "CBPWRMD = 10" and MAX value of 100 µs in セクション 8.51, *Comparator_B*	52
• Renamed FCTL4.MGR0 and MGR1 in the $f_{MCLK,MGR}$ parameter in セクション 8.54, *Flash Memory* to be consistent with header files	55
• Replaced former section *Development Tools Support* with セクション 10.3, *Tools and Software*	110

Changes from revision C to revision D

Changes from August 6, 2013 to December 8, 2015	Page
• 全体を通してドキュメントのフォーマットと編成を変更、セクションの番号追加も含む	1
• すべての機能ブロック図をセクション 4「*機能ブロック図*」に移動	3
• Added USB column to 表 6-1, *Family Members*	7
• Added セクション 6, *Device Comparison*, and moved 表 6-1 to it	7
• Added "Port U is supplied by the LDOO rail" to the PU.0 and PU.1 descriptions in セクション 7.2, *Signal Descriptions*	11
• Added セクション 8.2, *ESD Ratings*	17
• Added note to C_{VCORE}	17
• Added セクション 8.7, *Thermal Resistance Characteristics*	21
• Added note to R_{Pull}	22
• Changed TYP value of $C_{L,eff}$ with Test Conditions of "XTS = 0, XCAPx = 0" from 2 pF to 1 pF	26
• In V_{BAT3} parameter description, changed from "$V_{BAT3} \neq V_{BAT}/3$" to "$V_{BAT3} = V_{BAT}/3$"	34
• Changed from f_{DAC12_0OUT} to f_{DAC12_1OUT} in the first row of the Test Conditions for the "Channel-to-channel crosstalk" parameter	51
• Changed the value of DAC12_xDAT from 7F7h to F7Fh and changed the x-axis label from f_{Toggle} to $1/f_{Toggle}$ in 図 8-22, *Crosstalk Test Conditions*	51

- Corrected the spelling of the MRG bits in the $f_{MCLK,MRG}$ parameter in セクション 8.54, *Flash Memory* 55
- Removed RTC_B from LPM4.5 wake-up options..... 58
- Throughout document, changed all instances of "bootstrap loader" to "bootloader" 60
- Added the paragraph that starts "*Using the MSP430 RTC_B Module With Battery Backup Supply* describes how..." 64
- Corrected names of interrupt events PMMSWBOR (BOR) and PMMSWPOR (POR) in 表 9-10, *System Module Interrupt Vector Registers* 65
- Corrected spelling of NMIIFG (added missing "I") in 表 9-10, *System Module Interrupt Vector Registers* 65
- Added connection from "LCDS40...LCDS42" to AND gate in 図 9-7, *Port P5 (P5.2 to P5.7) Diagram* 93
- Added P7SEL.2 and XT2BYPASS inputs with AND and OR gates in 図 9-10, *Port P7 (P7.3) Diagram* 97
- Changed P7SEL.3 column from X to 0 for "P7.3 (I/O)" rows..... 97
- Changed 表 9-61, *Port PU.0, PU.1 Functions* 104
- Added セクション 10 and moved *Development Tools Support*, *Device and Development Tool Nomenclature*, *Trademarks*, and *Electrostatic Discharge Caution* sections to it.....108
- Added セクション 11, *Mechanical, Packaging, and Orderable Information* 115

The following table lists the changes to this data sheet from the original release through revision C.

REVISION	COMMENTS
SLAS720C August 2013	セクション 7.2, Added note regarding pullup resistor to $\overline{RST}$/NMI/SBWTDIO pin. Added Applications, Development Tools Support, and Device and Development Tool Nomenclature セクション 9.12.1, Changed the description of the number of I/Os in each port. 表 9-18, Added PM5CTL0 register. セクション 8.45, Fixed typo in I_{DD} Test Conditions (changed from DAC12IOG to DAC12OG). セクション 8.54, Changed I_{ERASE} and I_{MERASE}, I_{BANK} limits.
SLAS720B August 2012	Changed ACLK description in セクション 7.2. Changed typos to Interrupt Flag names on Timer TA2 rows in 表 9-3. Changed notes on セクション 8.44. Changed SYSRSTIV, System Reset offset 1Ch to Reserved in 表 9-10. Corrected names of SVMLVLRIFG and SVMHVLRIFG bits in 表 9-10. Changed $t_{SENSOR(sample)}$ MIN to 100 µs in セクション 8.42. Changed note (2) in セクション 8.42. Editorial changes throughout.
SLAS720A September 2011	Production Data release
SLAS720 August 2010	Product Preview release

Copyright © 2021 Texas Instruments Incorporated

6 Device Comparison

表 6-1 summarizes the available family members.

表 6-1. Device Comparison

DEVICE(1) (2)	FLASH (KB)	SRAM (KB)	Timer_A(3)	Timer_B(4)	USCI_A: UART, IrDA, SPI	USCI_B: SPI, I²C	ADC12_A (Ch)	DAC12_A (Ch)	Comp_B (Ch)	USB	I/O	PACKAGE
MSP430F6438	256	18	5, 3, 3	7	2	2	12 ext, 4 int	2	12	No	74	100 PZ, 113 ZCA, 113 ZQW
MSP430F6436	128	18	5, 3, 3	7	2	2	12 ext, 4 int	2	12	No	74	100 PZ
MSP430F6435	256	18	5, 3, 3	7	2	2	12 ext, 4 int	–	12	No	74	100 PZ, 113 ZCA, 113 ZQW
MSP430F6433	128	10	5, 3, 3	7	2	2	12 ext, 4 int	–	12	No	74	100 PZ, 113 ZCA, 113 ZQW

(1) For the most current package and ordering information, see the *Package Option Addendum* in セクション 11, or see the TI website at www.ti.com.
(2) Package drawings, standard packing quantities, thermal data, symbolization, and PCB design guidelines are available at www.ti.com/packaging.
(3) Each number in the sequence represents an instantiation of Timer_A with its associated number of capture/compare registers and PWM output generators available. For example, a number sequence of 3, 5 would represent two instantiations of Timer_A, the first instantiation having 3 and the second instantiation having 5 capture/compare registers and PWM output generators, respectively.
(4) Each number in the sequence represents an instantiation of Timer_B with its associated number of capture/compare registers and PWM output generators available. For example, a number sequence of 3, 5 would represent two instantiations of Timer_B, the first instantiation having 3 and the second instantiation having 5 capture/compare registers and PWM output generators, respectively.

6.1 Related Products

For information about other devices in this family of products or related products, see the following links.

TI 16-bit and 32-bit microcontrollers

High-performance, low-power solutions to enable the autonomous future

Products for MSP430 ultra-low-power sensing & measurement MCUs

One platform. One ecosystem. Endless possibilities.

Companion products for MSP430F6438

Review products that are frequently purchased or used in conjunction with this product.

Reference designs

Find reference designs leveraging the best in TI technology to solve your system-level challenges

7 Terminal Configuration and Functions

7.1 Pin Diagrams

図 7-1 shows the pinout for the MSP430F6438 and MSP430F6436 devices in the 100-pin PZ package.

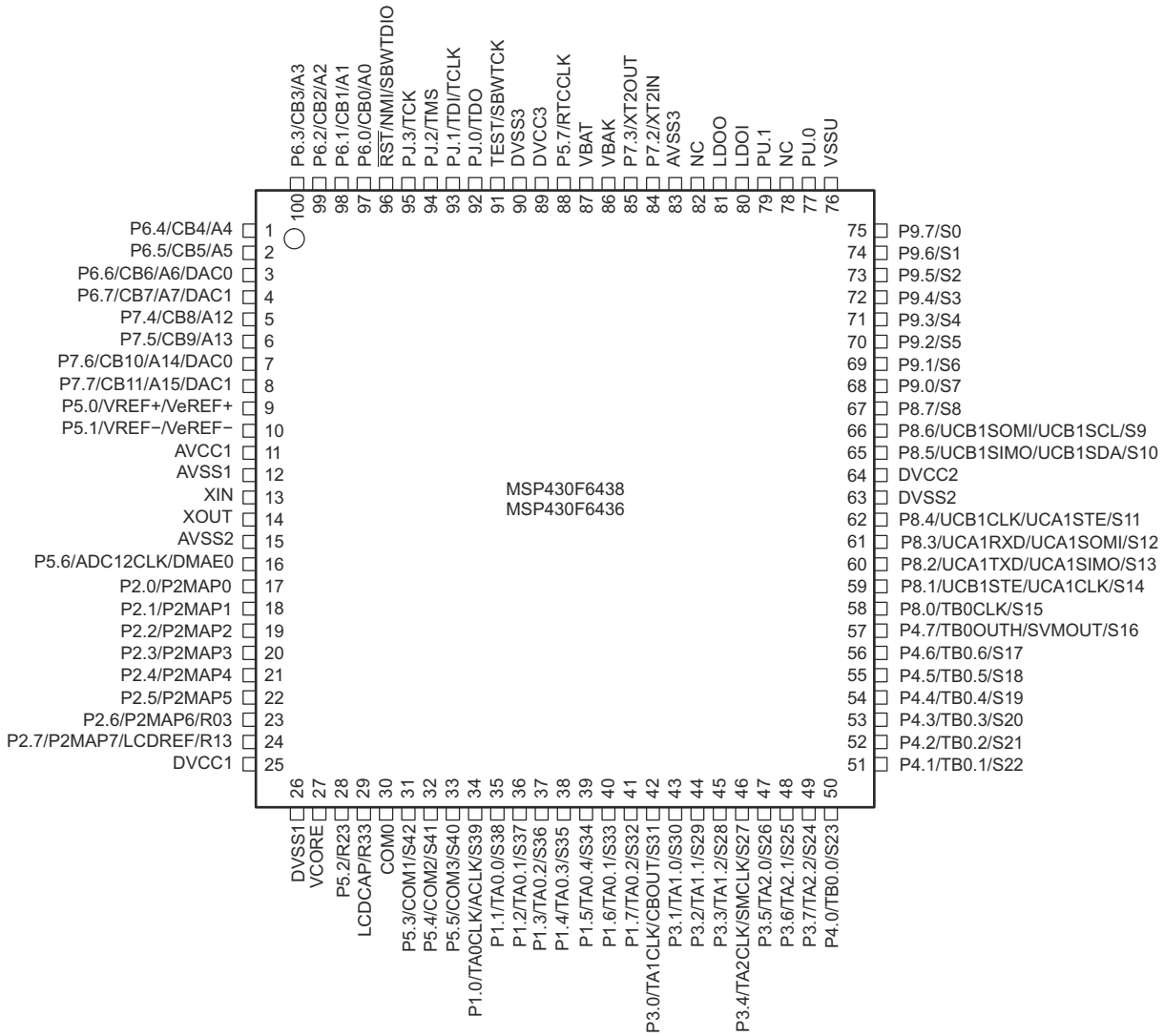

CAUTION: LCDCAP/R33 must be connected to DV_{SS} if not used.

図 7-1. 100-Pin PZ Package (Top View) – MSP430F6438, MSP430F6436

Copyright © 2021 Texas Instruments Incorporated

図 7-2 shows the pinout for the MSP430F6435 and MSP430F6433 devices in the 100-pin PZ package.

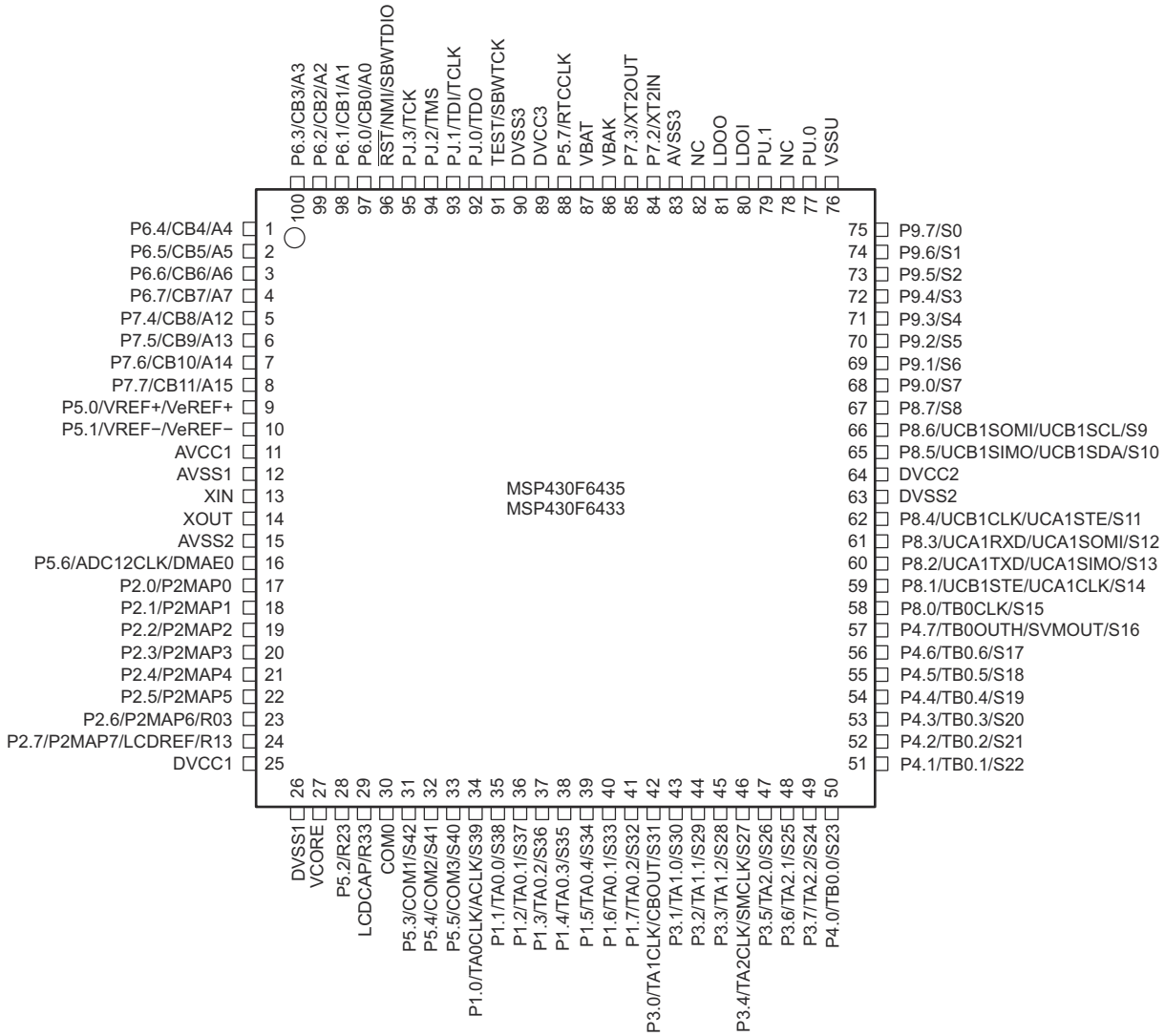

CAUTION: LCDCAP/R33 must be connected to DV_{SS} if not used.

図 7-2. 100-Pin PZ Package (Top View) – MSP430F6435, MSP430F6433

図 7-3 shows the pinout for all devices in the 113-pinZCA or ZQW package. See 表 7-1 for pin assignments and descriptions.

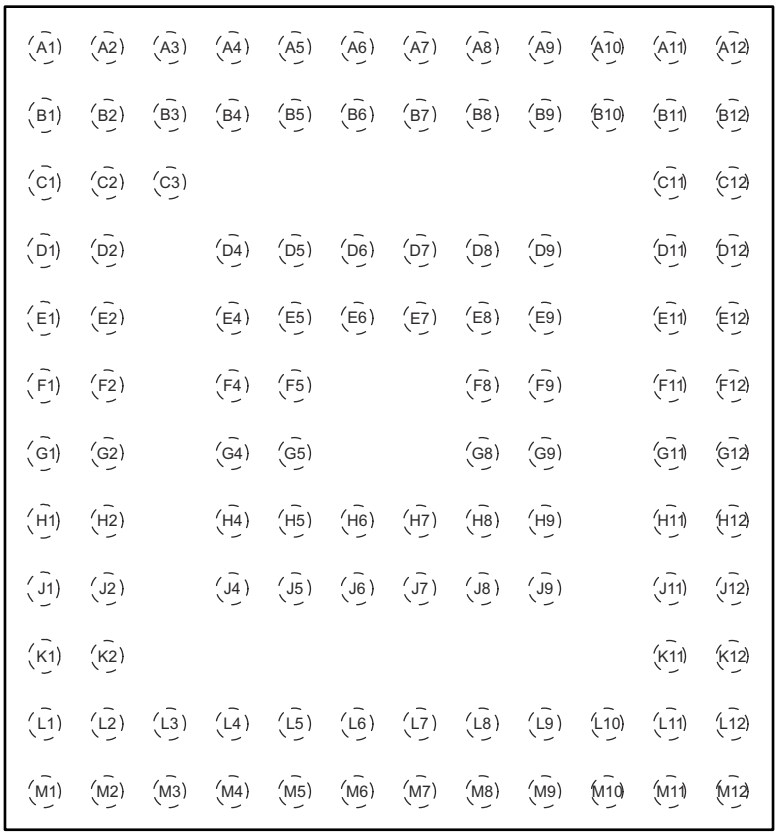

NOTE: For terminal assignments, see 表 7-1.

図 7-3. 113-Pin ZCA or ZQW Package (Top View) – MSP430F6438, MSP430F6435, MSP430F6433

Copyright © 2021 Texas Instruments Incorporated

7.2 Signal Descriptions

表 7-1 describes the signals for all device variants and packages.

表 7-1. Signal Descriptions

TERMINAL			I/O[1]	DESCRIPTION
NAME	NO.[4]			
	PZ	ZCA, ZQW		
P6.4/CB4/A4	1	A1	I/O	General-purpose digital I/O Comparator_B input CB4 Analog input A4 – ADC
P6.5/CB5/A5	2	B2	I/O	General-purpose digital I/O Comparator_B input CB5 Analog input A5 – ADC
P6.6/CB6/A6/DAC0	3	B1	I/O	General-purpose digital I/O Comparator_B input CB6 Analog input A6 – ADC DAC12.0 output (not available on F6435 and F6433 devices)
P6.7/CB7/A7/DAC1	4	C2	I/O	General-purpose digital I/O Comparator_B input CB7 Analog input A7 – ADC DAC12.1 output (not available on F6435 and F6433 devices)
P7.4/CB8/A12	5	C1	I/O	General-purpose digital I/O Comparator_B input CB8 Analog input A12 –ADC
P7.5/CB9/A13	6	C3	I/O	General-purpose digital I/O Comparator_B input CB9 Analog input A13 – ADC
P7.6/CB10/A14/DAC0	7	D2	I/O	General-purpose digital I/O Comparator_B input CB10 Analog input A14 – ADC DAC12.0 output (not available on F6435 and F6433 devices)
P7.7/CB11/A15/DAC1	8	D1	I/O	General-purpose digital I/O Comparator_B input CB11 Analog input A15 – ADC DAC12.1 output (not available on F6435 and F6433 devices)
P5.0/VREF+/VeREF+	9	D4	I/O	General-purpose digital I/O Output of reference voltage to the ADC Input for an external reference voltage to the ADC
P5.1/VREF-/VeREF-	10	E4	I/O	General-purpose digital I/O Negative terminal for the reference voltage of the ADC for both sources, the internal reference voltage, or an external applied reference voltage
AVCC1	11	E1, E2		Analog power supply
AVSS1	12	F2		Analog ground supply
XIN	13	F1	I	Input terminal for crystal oscillator XT1
XOUT	14	G1	O	Output terminal of crystal oscillator XT1
AVSS2	15	G2		Analog ground supply
P5.6/ADC12CLK/DMAE0	16	H1	I/O	General-purpose digital I/O Conversion clock output ADC DMA external trigger input

表 7-1. Signal Descriptions (continued)

TERMINAL			I/O[1]	DESCRIPTION
NAME	NO.[4]			
	PZ	ZCA, ZQW		
P2.0/P2MAP0	17	G4	I/O	General-purpose digital I/O with port interrupt and mappable secondary function Default mapping: USCI_B0 SPI slave transmit enable; USCI_A0 clock input/output
P2.1/P2MAP1	18	H2	I/O	General-purpose digital I/O with port interrupt and mappable secondary function Default mapping: USCI_B0 SPI slave in/master out; USCI_B0 I^2C data
P2.2/P2MAP2	19	J1	I/O	General-purpose digital I/O with port interrupt and mappable secondary function Default mapping: USCI_B0 SPI slave out/master in; USCI_B0 I^2C clock
P2.3/P2MAP3	20	H4	I/O	General-purpose digital I/O with port interrupt and mappable secondary function Default mapping: USCI_B0 clock input/output; USCI_A0 SPI slave transmit enable
P2.4/P2MAP4	21	J2	I/O	General-purpose digital I/O with port interrupt and mappable secondary function Default mapping: USCI_A0 UART transmit data; USCI_A0 SPI slave in/master out
P2.5/P2MAP5	22	K1	I/O	General-purpose digital I/O with port interrupt and mappable secondary function Default mapping: USCI_A0 UART receive data; USCI_A0 slave out/master in
P2.6/P2MAP6/R03	23	K2	I/O	General-purpose digital I/O with port interrupt and mappable secondary function Default mapping: no secondary function Input/output port of lowest analog LCD voltage (V5)
P2.7/P2MAP7/LCDREF/R13	24	L2	I/O	General-purpose digital I/O with port interrupt and mappable secondary function Default mapping: no secondary function External reference voltage input for regulated LCD voltage Input/output port of third most positive analog LCD voltage (V3 or V4)
DVCC1	25	L1		Digital power supply
DVSS1	26	M1		Digital ground supply
VCORE[2]	27	M2		Regulated core power supply (internal use only, no external current loading)
P5.2/R23	28	L3	I/O	General-purpose digital I/O Input/output port of second most positive analog LCD voltage (V2)
LCDCAP/R33	29	M3	I/O	LCD capacitor connection Input/output port of most positive analog LCD voltage (V1) **CAUTION** **CAUTION:** LCDCAP/R33 must be connected to DV_{SS} if not used.
COM0	30	J4	O	LCD common output COM0 for LCD backplane
P5.3/COM1/S42	31	L4	I/O	General-purpose digital I/O LCD common output COM1 for LCD backplane LCD segment output S42
P5.4/COM2/S41	32	M4	I/O	General-purpose digital I/O LCD common output COM2 for LCD backplane LCD segment output S41
P5.5/COM3/S40	33	J5	I/O	General-purpose digital I/O LCD common output COM3 for LCD backplane LCD segment output S40
P1.0/TA0CLK/ACLK/S39	34	L5	I/O	General-purpose digital I/O with port interrupt Timer TA0 clock signal TACLK input ACLK output (divided by 1, 2, 4, 8, 16, or 32) LCD segment output S39

Copyright © 2021 Texas Instruments Incorporated

表 7-1. Signal Descriptions (continued)

TERMINAL			I/O[1]	DESCRIPTION
NAME	NO.[4]			
	PZ	ZCA, ZQW		
P1.1/TA0.0/S38	35	M5	I/O	General-purpose digital I/O with port interrupt Timer TA0 CCR0 capture: CCI0A input, compare: Out0 output BSL transmit output LCD segment output S38
P1.2/TA0.1/S37	36	J6	I/O	General-purpose digital I/O with port interrupt Timer TA0 CCR1 capture: CCI1A input, compare: Out1 output BSL receive input LCD segment output S37
P1.3/TA0.2/S36	37	H6	I/O	General-purpose digital I/O with port interrupt Timer TA0 CCR2 capture: CCI2A input, compare: Out2 output LCD segment output S36
P1.4/TA0.3/S35	38	M6	I/O	General-purpose digital I/O with port interrupt Timer TA0 CCR3 capture: CCI3A input compare: Out3 output LCD segment output S35
P1.5/TA0.4/S34	39	L6	I/O	General-purpose digital I/O with port interrupt Timer TA0 CCR4 capture: CCI4A input, compare: Out4 output LCD segment output S34
P1.6/TA0.1/S33	40	J7	I/O	General-purpose digital I/O with port interrupt Timer TA0 CCR1 capture: CCI1B input, compare: Out1 output LCD segment output S33
P1.7/TA0.2/S32	41	M7	I/O	General-purpose digital I/O with port interrupt Timer TA0 CCR2 capture: CCI2B input, compare: Out2 output LCD segment output S32
P3.0/TA1CLK/CBOUT/S31	42	L7	I/O	General-purpose digital I/O with port interrupt Timer TA1 clock input Comparator_B output LCD segment output S31
P3.1/TA1.0/S30	43	H7	I/O	General-purpose digital I/O with port interrupt Timer TA1 capture CCR0: CCI0A/CCI0B input, compare: Out0 output LCD segment output S30
P3.2/TA1.1/S29	44	M8	I/O	General-purpose digital I/O with port interrupt Timer TA1 capture CCR1: CCI1A/CCI1B input, compare: Out1 output LCD segment output S29
P3.3/TA1.2/S28	45	L8	I/O	General-purpose digital I/O with port interrupt Timer TA1 capture CCR2: CCI2A/CCI2B input, compare: Out2 output LCD segment output S28
P3.4/TA2CLK/SMCLK/S27	46	J8	I/O	General-purpose digital I/O with port interrupt Timer TA2 clock input SMCLK output LCD segment output S27
P3.5/TA2.0/S26	47	M9	I/O	General-purpose digital I/O with port interrupt Timer TA2 capture CCR0: CCI0A/CCI0B input, compare: Out0 output LCD segment output S26
P3.6/TA2.1/S25	48	L9	I/O	General-purpose digital I/O with port interrupt Timer TA2 capture CCR1: CCI1A/CCI1B input, compare: Out1 output LCD segment output S25

Copyright © 2021 Texas Instruments Incorporated

表 7-1. Signal Descriptions (continued)

TERMINAL			I/O[1]	DESCRIPTION
NAME	NO.[4]			
	PZ	ZCA, ZQW		
P3.7/TA2.2/S24	49	M10	I/O	General-purpose digital I/O with port interrupt Timer TA2 capture CCR2: CCI2A/CCI2B input, compare: Out2 output LCD segment output S24
P4.0/TB0.0/S23	50	J9	I/O	General-purpose digital I/O with port interrupt Timer TB0 capture CCR0: CCI0A/CCI0B input, compare: Out0 output LCD segment output S23
P4.1/TB0.1/S22	51	M11	I/O	General-purpose digital I/O with port interrupt Timer TB0 capture CCR1: CCI1A/CCI1B input, compare: Out1 output LCD segment output S22
P4.2/TB0.2/S21	52	L10	I/O	General-purpose digital I/O with port interrupt Timer TB0 capture CCR2: CCI2A/CCI2B input, compare: Out2 output LCD segment output S21
P4.3/TB0.3/S20	53	M12	I/O	General-purpose digital I/O with port interrupt Timer TB0 capture CCR3: CCI3A/CCI3B input, compare: Out3 output LCD segment output S20
P4.4/TB0.4/S19	54	L12	I/O	General-purpose digital I/O with port interrupt Timer TB0 capture CCR4: CCI4A/CCI4B input, compare: Out4 output LCD segment output S19
P4.5/TB0.5/S18	55	L11	I/O	General-purpose digital I/O with port interrupt Timer TB0 capture CCR5: CCI5A/CCI5B input, compare: Out5 output LCD segment output S18
P4.6/TB0.6/S17	56	K11	I/O	General-purpose digital I/O with port interrupt Timer TB0 capture CCR6: CCI6A/CCI6B input, compare: Out6 output LCD segment output S17
P4.7/TB0OUTH/SVMOUT/S16	57	K12	I/O	General-purpose digital I/O with port interrupt Timer TB0: Switch all PWM outputs high impedance SVM output LCD segment output S16
P8.0/TB0CLK/S15	58	J11	I/O	General-purpose digital I/O Timer TB0 clock input LCD segment output S15
P8.1/UCB1STE/UCA1CLK/S14	59	J12	I/O	General-purpose digital I/O USCI_B1 SPI slave transmit enable; USCI_A1 clock input/output LCD segment output S14
P8.2/UCA1TXD/UCA1SIMO/S13	60	H11	I/O	General-purpose digital I/O USCI_A1 UART transmit data; USCI_A1 SPI slave in/master out LCD segment output S13
P8.3/UCA1RXD/UCA1SOMI/S12	61	H12	I/O	General-purpose digital I/O USCI_A1 UART receive data; USCI_A1 SPI slave out/master in LCD segment output S12
P8.4/UCB1CLK/UCA1STE/S11	62	G11	I/O	General-purpose digital I/O USCI_B1 clock input/output; USCI_A1 SPI slave transmit enable LCD segment output S11
DVSS2	63	G12		Digital ground supply
DVCC2	64	F12		Digital power supply

Copyright © 2021 Texas Instruments Incorporated

表 7-1. Signal Descriptions (continued)

TERMINAL			I/O[1]	DESCRIPTION
NAME	NO.[4]			
	PZ	ZCA, ZQW		
P8.5/UCB1SIMO/UCB1SDA/S10	65	F11	I/O	General-purpose digital I/O USCI_B1 SPI slave in/master out; USCI_B1 I^2C data LCD segment output S10
P8.6/UCB1SOMI/UCB1SCL/S9	66	G9	I/O	General-purpose digital I/O USCI_B1 SPI slave out/master in; USCI_B1 I^2C clock LCD segment output S9
P8.7/S8	67	E12	I/O	General-purpose digital I/O LCD segment output S8
P9.0/S7	68	E11	I/O	General-purpose digital I/O LCD segment output S7
P9.1/S6	69	F9	I/O	General-purpose digital I/O LCD segment output S6
P9.2/S5	70	D12	I/O	General-purpose digital I/O LCD segment output S5
P9.3/S4	71	D11	I/O	General-purpose digital I/O LCD segment output S4
P9.4/S3	72	E9	I/O	General-purpose digital I/O LCD segment output S3
P9.5/S2	73	C12	I/O	General-purpose digital I/O LCD segment output S2
P9.6/S1	74	C11	I/O	General-purpose digital I/O LCD segment output S1
P9.7/S0	75	D9	I/O	General-purpose digital I/O LCD segment output S0
VSSU	76	B11, B12		PU ground supply
PU.0	77	A12	I/O	General-purpose digital I/O, controlled by PU control register. Port U is supplied by the LDOO rail.
NC	78	B10		No connect
PU.1	79	A11	I/O	General-purpose digital I/O, controlled by PU control register. Port U is supplied by the LDOO rail.
LDOI	80	A10		LDO input
LDOO	81	A9		LDO output
NC	82	B9		No connect
AVSS3	83	A8		Analog ground supply
P7.2/XT2IN	84	B8	I/O	General-purpose digital I/O Input terminal for crystal oscillator XT2
P7.3/XT2OUT	85	B7	I/O	General-purpose digital I/O Output terminal of crystal oscillator XT2
VBAK	86	A7		Capacitor for backup subsystem. Do not load this pin externally. For capacitor values, see C_{BAK} in セクション 8.3.
VBAT	87	D8		Backup or secondary supply voltage. If backup voltage is not supplied, connect to DVCC externally.
P5.7/RTCCLK	88	D7	I/O	General-purpose digital I/O RTCCLK output
DVCC3	89	A6		Digital power supply

表 7-1. Signal Descriptions (continued)

TERMINAL			I/O[1]	DESCRIPTION
NAME	NO.[4]			
	PZ	ZCA, ZQW		
DVSS3	90	A5		Digital ground supply
TEST/SBWTCK	91	B6	I	Test mode pin; selects digital I/O on JTAG pins Spy-Bi-Wire input clock
PJ.0/TDO	92	B5	I/O	General-purpose digital I/O Test data output port
PJ.1/TDI/TCLK	93	A4	I/O	General-purpose digital I/O Test data input or test clock input
PJ.2/TMS	94	E7	I/O	General-purpose digital I/O Test mode select
PJ.3/TCK	95	D6	I/O	General-purpose digital I/O Test clock
$\overline{\text{RST}}$/NMI/SBWTDIO	96	A3	I/O	Reset input (active low)[3] Nonmaskable interrupt input Spy-Bi-Wire data input/output
P6.0/CB0/A0	97	B4	I/O	General-purpose digital I/O Comparator_B input CB0 Analog input A0 – ADC
P6.1/CB1/A1	98	B3	I/O	General-purpose digital I/O Comparator_B input CB1 Analog input A1 – ADC
P6.2/CB2/A2	99	A2	I/O	General-purpose digital I/O Comparator_B input CB2 Analog input A2 – ADC
P6.3/CB3/A3	100	D5	I/O	General-purpose digital I/O Comparator_B input CB3 Analog input A3 – ADC
Reserved	N/A	E5, E6, E8, F4, F5, F8, G5, G8, H5, H8, H9		Reserved. TI recommends connecting to ground (DVSS, AVSS).

(1) I = input, O = output, N/A = not available on this package offering
(2) VCORE is for internal use only. No external current loading is possible. VCORE should only be connected to the recommended capacitor value, C_{VCORE}.
(3) When this pin is configured as reset, the internal pullup resistor is enabled by default.
(4) See the *Package Option Addendum* in セクション 11 to determine which devices are available in each package.

Copyright © 2021 Texas Instruments Incorporated

8 Specifications

All graphs in this section are for typical conditions, unless otherwise noted.

Typical (TYP) values are specified at V_{CC} = 3.3 V and T_A = 25°C, unless otherwise noted.

8.1 Absolute Maximum Ratings

over operating free-air temperature range (unless otherwise noted) (1)

	MIN	MAX	UNIT
Voltage applied at V_{CC} to V_{SS}	–0.3	4.1	V
Voltage applied to any pin (excluding VCORE, VBUS, V18)(2)	–0.3	V_{CC} + 0.3	V
Diode current at any device pin		±2	mA
Maximum junction temperature, T_J		95	°C
Storage temperature, T_{stg} (3)	–55	150	°C

(1) Stresses beyond those listed under *Absolute Maximum Ratings* may cause permanent damage to the device. These are stress ratings only, and functional operation of the device at these or any other conditions beyond those indicated under *Recommended Operating Conditions* is not implied. Exposure to absolute-maximum-rated conditions for extended periods may affect device reliability.
(2) All voltages referenced to V_{SS}. VCORE is for internal device use only. No external DC loading or voltage should be applied.
(3) Higher temperature may be applied during board soldering according to the current JEDEC J-STD-020 specification with peak reflow temperatures not higher than classified on the device label on the shipping boxes or reels.

8.2 ESD Ratings

		VALUE	UNIT
$V_{(ESD)}$ Electrostatic discharge	Human-body model (HBM), per ANSI/ESDA/JEDEC JS-001(1)	±1000	V
	Charged-device model (CDM), per JEDEC specification JESD22-C101(2)	±250	

(1) JEDEC document JEP155 states that 500-V HBM allows safe manufacturing with a standard ESD control process. Pins listed as ±1000 V may actually have higher performance.
(2) JEDEC document JEP157 states that 250-V CDM allows safe manufacturing with a standard ESD control process. Pins listed as ±250 V may actually have higher performance.

8.3 Recommended Operating Conditions

			MIN	NOM	MAX	UNIT
V_{CC}	Supply voltage during program execution and flash programming (AVCC1 = DVCC1 = DVCC2 = DVCC3 = DV_{CC} = V_{CC})(1) (2)	PMMCOREVx = 0	1.8		3.6	V
		PMMCOREVx = 0, 1	2.0		3.6	
		PMMCOREVx = 0, 1, 2	2.2		3.6	
		PMMCOREVx = 0, 1, 2, 3	2.4		3.6	
V_{SS}	Supply voltage (AVSS1 = AVSS2 = AVSS3 = DVSS1 = DVSS2 = DVSS3 = V_{SS})			0		V
$V_{BAT,RTC}$	Backup-supply voltage with RTC operational	T_A = 0°C to 85°C	1.55		3.6	V
		T_A = –40°C to +85°C	1.70		3.6	
$V_{BAT,MEM}$	Backup-supply voltage with backup memory retained	T_A = –40°C to +85°C	1.20		3.6	V
T_A	Operating free-air temperature	I version	–40		85	°C
T_J	Operating junction temperature	I version	–40		85	°C
C_{BAK}	Capacitance at pin VBAK		1	4.7	10	nF
C_{VCORE}	Capacitor at VCORE(4)			470		nF
C_{DVCC}/ C_{VCORE}	Capacitor ratio of DVCC to VCORE		10			

8.3 Recommended Operating Conditions (continued)

			MIN	NOM	MAX	UNIT
f_{SYSTEM}	Processor frequency (maximum MCLK frequency)(3) (5) (see 図 8-1)	PMMCOREVx = 0, 1.8 V ≤ V_{CC} ≤ 3.6 V (default condition)	0		8.0	MHz
		PMMCOREVx = 1, 2 V ≤ V_{CC} ≤ 3.6 V	0		12.0	
		PMMCOREVx = 2, 2.2 V ≤ V_{CC} ≤ 3.6 V	0		16.0	
		PMMCOREVx = 3, 2.4 V ≤ V_{CC} ≤ 3.6 V	0		20.0	

(1) TI recommends powering AV_{CC} and DV_{CC} from the same source. A maximum difference of 0.3 V between AV_{CC} and DV_{CC} can be tolerated during power up and operation.
(2) The minimum supply voltage is defined by the supervisor SVS levels when it is enabled. See the threshold parameters in セクション 8.23 for the exact values and more details.
(3) The MSP430 CPU is clocked directly with MCLK. Both the high and low phase of MCLK must not exceed the pulse duration of the specified maximum frequency.
(4) A capacitor tolerance of ±20% or better is required.
(5) Modules may have a different maximum input clock specification. See the specification of the respective module in this data sheet.

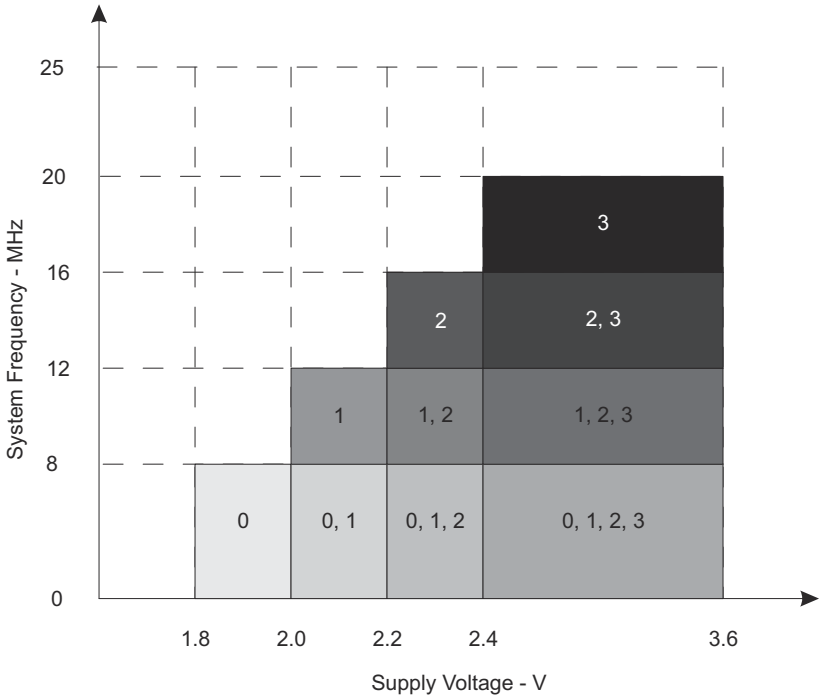

NOTE: The numbers within the fields denote the supported PMMCOREVx settings.

図 8-1. Frequency vs Supply Voltage

Copyright © 2021 Texas Instruments Incorporated

8.4 Active Mode Supply Current Into V_{CC} Excluding External Current

over recommended operating free-air temperature (unless otherwise noted)[1] [2] [3]

PARAMETER	EXECUTION MEMORY	V_{CC}	PMMCOREVx	FREQUENCY ($f_{DCO} = f_{MCLK} = f_{SMCLK}$)								UNIT
				1 MHz		8 MHz		12 MHz		20 MHz		
				TYP	MAX	TYP	MAX	TYP	MAX	TYP	MAX	
$I_{AM, Flash}$	Flash	3 V	0	0.32	0.36	2.1	2.4					mA
			1	0.36		2.4		3.6	4.0			
			2	0.37		2.5		3.8				
			3	0.39		2.7		4.0		6.6		
$I_{AM, RAM}$	RAM	3 V	0	0.18	0.21	1.0	1.2					mA
			1	0.20		1.2		1.7	1.9			
			2	0.22		1.3		2.0				
			3	0.23		1.4		2.1		3.6		

(1) All inputs are tied to 0 V or to V_{CC}. Outputs do not source or sink any current.
(2) The currents are characterized with a Micro Crystal MS1V-T1K crystal with a load capacitance of 12.5 pF. The internal and external load capacitance are chosen to closely match the required 12.5 pF.
(3) Characterized with program executing typical data processing. LDO disabled (LDOEN = 0).
f_{ACLK} = 32786 Hz, $f_{DCO} = f_{MCLK} = f_{SMCLK}$ at specified frequency.
XTS = CPUOFF = SCG0 = SCG1 = OSCOFF = SMCLKOFF = 0.

8.5 Low-Power Mode Supply Currents (Into V_{CC}) Excluding External Current

over recommended ranges of supply voltage and operating free-air temperature (unless otherwise noted)[1] [2]

PARAMETER		V_{CC}	PMMCOREVx	TEMPERATURE (T_A)								UNIT
				–40°C		25°C		60°C		85°C		
				TYP	MAX	TYP	MAX	TYP	MAX	TYP	MAX	
$I_{LPM0,1MHz}$	Low-power mode 0[3] [9]	2.2 V	0	71		75	87	81		85	99	µA
		3 V	3	78		83	98	89		94	108	
I_{LPM2}	Low-power mode 2[4] [9]	2.2 V	0	6.3		6.7	9.9	9.0		11	16	µA
		3 V	3	6.6		7.0	11	10		12	18	
$I_{LPM3,XT1LF}$	Low-power mode 3, crystal mode[5] [9]	2.2 V	0	1.6		1.8	2.4	4.7		6.5	10.5	µA
			1	1.6		1.9		4.8		6.6		
			2	1.7		2.0		4.9		6.7		
		3 V	0	1.9		2.1	2.7	5.0		6.8	10.8	
			1	1.9		2.1		5.1		7.0		
			2	2.0		2.2		5.2		7.1		
			3	2.0		2.2	2.9	5.4		7.3	12.6	
$I_{LPM3, VLO,WDT}$	Low-power mode 3, VLO mode, Watchdog enabled[6] [9]	3 V	0	0.9		1.2	1.9	4.0		5.9	10.3	µA
			1	0.9		1.2		4.1		6.0		
			2	1.0		1.3		4.2		6.1		
			3	1.0		1.3	2.2	4.3		6.3	11.3	
I_{LPM4}	Low-power mode 4[7] [9]	3 V	0	0.9		1.1	1.8	3.9		5.8	10	µA
			1	0.9		1.1		4.0		5.9		
			2	1.0		1.2		4.1		6.1		
			3	1.0		1.2	2.1	4.2		6.2	11	
$I_{LPM3.5, RTC,VCC}$	Low-power mode 3.5 (LPM3.5) current with active RTC into primary supply pin DV_{CC} [10]	3 V				0.5				0.8	1.4	µA

8.5 Low-Power Mode Supply Currents (Into V_{CC}) Excluding External Current (continued)

over recommended ranges of supply voltage and operating free-air temperature (unless otherwise noted)[1] [2]

PARAMETER		V_{CC}	PMMCOREVx	TEMPERATURE (T_A)								UNIT
				–40°C		25°C		60°C		85°C		
				TYP	MAX	TYP	MAX	TYP	MAX	TYP	MAX	
$I_{LPM3.5, RTC,VBAT}$	Low-power mode 3.5 (LPM3.5) current with active RTC into backup supply pin VBAT[11]	3 V				0.6				0.8	1.4	µA
$I_{LPM3.5, RTC,TOT}$	Total low-power mode 3.5 (LPM3.5) current with active RTC[12]	3 V		1.0		1.1		1.3		1.6	2.8	µA
$I_{LPM4.5}$	Low-power mode 4.5 (LPM4.5)[8]	3 V		0.2		0.3	0.6	0.7		0.9	1.4	µA

(1) All inputs are tied to 0 V or to V_{CC}. Outputs do not source or sink any current.
(2) The currents are characterized with a Micro Crystal CC4V-T1A SMD crystal with a load capacitance of 9 pF. The internal and external load capacitance are chosen to closely match the required 9 pF.
(3) Current for watchdog timer clocked by SMCLK included. ACLK = low-frequency crystal operation (XTS = 0, XT1DRIVEx = 0).
CPUOFF = 1, SCG0 = 0, SCG1 = 0, OSCOFF = 0 (LPM0), f_{ACLK} = 32768 Hz, f_{MCLK} = 0 MHz, f_{SMCLK} = f_{DCO} = 1 MHz
LDO disabled (LDOEN = 0).
(4) Current for watchdog timer clocked by ACLK and RTC clocked by LFXT1 (32768 Hz) included. ACLK = low-frequency crystal operation (XTS = 0, XT1DRIVEx = 0).
CPUOFF = 1, SCG0 = 0, SCG1 = 1, OSCOFF = 0 (LPM2), f_{ACLK} = 32768 Hz, f_{MCLK} = 0 MHz, f_{SMCLK} = f_{DCO} = 0 MHz; DCO setting = 1 MHz operation, DCO bias generator enabled.
LDO disabled (LDOEN = 0).
(5) Current for watchdog timer clocked by ACLK and RTC clocked by LFXT1 (32768 Hz) included. ACLK = low-frequency crystal operation (XTS = 0, XT1DRIVEx = 0).
CPUOFF = 1, SCG0 = 1, SCG1 = 1, OSCOFF = 0 (LPM3), f_{ACLK} = 32768 Hz, f_{MCLK} = f_{SMCLK} = f_{DCO} = 0 MHz
LDO disabled (LDOEN = 0).
(6) Current for watchdog timer clocked by VLO included.
CPUOFF = 1, SCG0 = 1, SCG1 = 1, OSCOFF = 0 (LPM3), f_{ACLK} = f_{MCLK} = f_{SMCLK} = f_{DCO} = 0 MHz
LDO disabled (LDOEN = 0).
(7) CPUOFF = 1, SCG0 = 1, SCG1 = 1, OSCOFF = 1 (LPM4), f_{DCO} = f_{ACLK} = f_{MCLK} = f_{SMCLK} = 0 MHz
LDO disabled (LDOEN = 0).
(8) Internal regulator disabled. No data retention.
CPUOFF = 1, SCG0 = 1, SCG1 = 1, OSCOFF = 1, PMMREGOFF = 1 (LPM4.5), f_{DCO} = f_{ACLK} = f_{MCLK} = f_{SMCLK} = 0 MHz
(9) Current for brownout included. Low-side supervisor (SVS_L) and low-side monitor (SVM_L) disabled. High-side supervisor (SVS_H) and high-side monitor (SVM_H) disabled. RAM retention enabled.
(10) V_{VBAT} = V_{CC} – 0.2 V, f_{DCO} = f_{MCLK} = f_{SMCLK} = 0 MHz, f_{ACLK} = 32768 Hz, PMMREGOFF = 1, RTC in backup domain active
(11) V_{VBAT} = V_{CC} – 0.2 V, f_{DCO} = f_{MCLK} = f_{SMCLK} = 0 MHz, f_{ACLK} = 32768 Hz, PMMREGOFF = 1, RTC in backup domain active, no current drawn on VBAK
(12) f_{DCO} = f_{MCLK} = f_{SMCLK} = 0 MHz, f_{ACLK} = 32768 Hz, PMMREGOFF = 1, RTC in backup domain active, no current drawn on VBAK

Copyright © 2021 Texas Instruments Incorporated

8.6 Low-Power Mode With LCD Supply Currents (Into V_{CC}) Excluding External Current

over recommended ranges of supply voltage and operating free-air temperature (unless otherwise noted)[(1) (2)]

PARAMETER		V_{CC}	PMMCOREVx	TEMPERATURE (T_A)								UNIT
				–40°C		25°C		60°C		85°C		
				TYP	MAX	TYP	MAX	TYP	MAX	TYP	MAX	
$I_{LPM3,}$ LCD, ext. bias	Low-power mode 3 (LPM3) current, LCD 4-mux mode, external biasing[(1) (2)]	3 V	0	2.3		2.7	3.1	5.4		7.4	11.5	µA
			1	2.3		2.7		5.6		7.5		
			2	2.4		2.8		5.8		7.7		
			3	2.4		2.8	3.5	5.9		7.9	13.2	
$I_{LPM3,}$ LCD, int. bias	Low-power mode 3 (LPM3) current, LCD 4-mux mode, internal biasing, charge pump disabled[(1) (3)]	3 V	0	2.7		3.2	3.8	5.9		7.9	12.2	µA
			1	2.7		3.2		6.1		8.1		
			2	2.8		3.3		6.2		8.3		
			3	2.8		3.3	4.9	6.4		8.4	13.7	
I_{LPM3} LCD,CP	Low-power mode 3 (LPM3) current, LCD 4-mux mode, internal biasing, charge pump enabled[(1) (4)]	2.2 V	0			3.8						µA
			1			3.9						
			2			4.0						
		3 V	0			4.0						µA
			1			4.1						
			2			4.2						
			3			4.2						

(1) Current for watchdog timer clocked by ACLK and RTC clocked by LFXT1 (32768 Hz) included. ACLK = low-frequency crystal operation (XTS = 0, XT1DRIVEx = 0).
CPUOFF = 1, SCG0 = 1, SCG1 = 1, OSCOFF = 0 (LPM3), f_{ACLK} = 32768 Hz, $f_{MCLK} = f_{SMCLK} = f_{DCO}$ = 0 MHz
Current for brownout included. Low-side supervisor and monitors disabled (SVS_L, SVM_L). High-side supervisor and monitor disabled (SVS_H, SVM_H). RAM retention enabled.

(2) LCDMx = 11 (4-mux mode), LCDREXT = 1, LCDEXTBIAS = 1 (external biasing), LCD2B = 0 (1/3 bias), LCDCPEN = 0 (charge pump disabled), LCDSSEL = 0, LCDPREx = 101, LCDDIVx = 00011 (f_{LCD} = 32768 Hz/32/4 = 256 Hz)
Current through external resistors not included (voltage levels are supplied by test equipment).
Even segments S0, S2,... = 0, odd segments S1, S3,... = 1. No LCD panel load.

(3) LCDMx = 11 (4-mux mode), LCDREXT = 0, LCDEXTBIAS = 0 (internal biasing), LCD2B = 0 (1/3 bias), LCDCPEN = 0 (charge pump disabled), LCDSSEL = 0, LCDPREx = 101, LCDDIVx = 00011 (f_{LCD} = 32768 Hz/32/4 = 256 Hz)
Even segments S0, S2,... = 0, odd segments S1, S3,... = 1. No LCD panel load.

(4) LCDMx = 11 (4-mux mode), LCDREXT = 0, LCDEXTBIAS = 0 (internal biasing), LCD2B = 0 (1/3 bias), LCDCPEN = 1 (charge pump enabled), VLCDx = 1000 (V_{LCD} = 3 V, typical), LCDSSEL = 0, LCDPREx = 101, LCDDIVx = 00011 (f_{LCD} = 32768 Hz/32/4 = 256 Hz)
Even segments S0, S2,... = 0, odd segments S1, S3,... = 1. No LCD panel load.

8.7 Thermal Resistance Characteristics

PARAMETER			VALUE	UNIT
$R\theta_{JA}$	Junction-to-ambient thermal resistance, still air[(1)]	LQFP (PZ)	122	°C/W
		BGA (ZQW)	108	
$R\theta_{JC(TOP)}$	Junction-to-case (top) thermal resistance[(2)]	LQFP (PZ)	83	°C/W
		BGA (ZQW)	72	
$R\theta_{JB}$	Junction-to-board thermal resistance[(3)]	LQFP (PZ)	98	°C/W
		BGA (ZQW)	76	

(1) The junction-to-ambient thermal resistance under natural convection is obtained in a simulation on a JEDEC-standard, High-K board, as specified in JESD51-7, in an environment described in JESD51-2a.

(2) The junction-to-case (top) thermal resistance is obtained by simulating a cold plate test on the package top. No specific JEDEC-standard test exists, but a close description can be found in the ANSI SEMI standard G30-88.

(3) The junction-to-board thermal resistance is obtained by simulating in an environment with a ring cold plate fixture to control the PCB temperature, as described in JESD51-8.

Copyright © 2021 Texas Instruments Incorporated

8.8 Schmitt-Trigger Inputs – General-Purpose I/O

over recommended ranges of supply voltage and operating free-air temperature (unless otherwise noted)[1]

PARAMETER		TEST CONDITIONS	V_{CC}	MIN	TYP	MAX	UNIT
V_{IT+}	Positive-going input threshold voltage		1.8 V	0.80		1.40	V
			3 V	1.50		2.10	
V_{IT-}	Negative-going input threshold voltage		1.8 V	0.45		1.00	V
			3 V	0.75		1.65	
V_{hys}	Input voltage hysteresis ($V_{IT+} – V_{IT-}$)		1.8 V	0.3		0.8	V
			3 V	0.4		1.0	
R_{Pull}	Pullup or pulldown resistor[2]	For pullup: $V_{IN} = V_{SS}$ For pulldown: $V_{IN} = V_{CC}$		20	35	50	kΩ
C_I	Input capacitance	$V_{IN} = V_{SS}$ or V_{CC}			5		pF

(1) Same parametrics apply to clock input pin when crystal bypass mode is used on XT1 (XIN) or XT2 (XT2IN).
(2) Also applies to $\overline{RST}$ pin when pullup or pulldown resistor is enabled.

8.9 Inputs – Ports P1, P2, P3, and P4

over recommended ranges of supply voltage and operating free-air temperature (unless otherwise noted)[1]

PARAMETER		TEST CONDITIONS	V_{CC}	MIN	MAX	UNIT
$t_{(int)}$	External interrupt timing[2]	Port P1, P2, P3, P4: P1.x to P4.x, External trigger pulse duration to set interrupt flag	2.2 V, 3 V	20		ns

(1) Some devices may contain additional ports with interrupts. See the block diagram and terminal function descriptions.
(2) An external signal sets the interrupt flag every time the minimum interrupt pulse duration $t_{(int)}$ is met. It may be set by trigger signals shorter than $t_{(int)}$.

8.10 Leakage Current – General-Purpose I/O

over recommended ranges of supply voltage and operating free-air temperature (unless otherwise noted)

PARAMETER		TEST CONDITIONS	V_{CC}	MIN	MAX	UNIT
$I_{lkg(Px.x)}$	High-impedance leakage current	See [1] [2]	1.8 V, 3 V		±50	nA

(1) The leakage current is measured with V_{SS} or V_{CC} applied to the corresponding pins, unless otherwise noted.
(2) The leakage of the digital port pins is measured individually. The port pin is selected for input and the pullup or pulldown resistor is disabled.

8.11 Outputs – General-Purpose I/O (Full Drive Strength)

over recommended ranges of supply voltage and operating free-air temperature (unless otherwise noted)

PARAMETER		TEST CONDITIONS	V_{CC}	MIN	MAX	UNIT
V_{OH}	High-level output voltage	$I_{(OHmax)}$ = –3 mA[1]	1.8 V	V_{CC} – 0.25	V_{CC}	V
		$I_{(OHmax)}$ = –10 mA[2]		V_{CC} – 0.60	V_{CC}	
		$I_{(OHmax)}$ = –5 mA[1]	3 V	V_{CC} – 0.25	V_{CC}	
		$I_{(OHmax)}$ = –15 mA[2]		V_{CC} – 0.60	V_{CC}	
V_{OL}	Low-level output voltage	$I_{(OLmax)}$ = 3 mA[1]	1.8 V	V_{SS}	V_{SS} + 0.25	V
		$I_{(OLmax)}$ = 10 mA[2]		V_{SS}	V_{SS} + 0.60	
		$I_{(OLmax)}$ = 5 mA[1]	3 V	V_{SS}	V_{SS} + 0.25	
		$I_{(OLmax)}$ = 15 mA[2]		V_{SS}	V_{SS} + 0.60	

(1) The maximum total current, $I_{(OHmax)}$ and $I_{(OLmax)}$, for all outputs combined should not exceed ±48 mA to hold the maximum voltage drop specified.
(2) The maximum total current, $I_{(OHmax)}$ and $I_{(OLmax)}$, for all outputs combined should not exceed ±100 mA to hold the maximum voltage drop specified.

Copyright © 2021 Texas Instruments Incorporated

8.12 Outputs – General-Purpose I/O (Reduced Drive Strength)

over recommended ranges of supply voltage and operating free-air temperature (unless otherwise noted)[3]

PARAMETER		TEST CONDITIONS	V_{CC}	MIN	MAX	UNIT
V_{OH}	High-level output voltage	$I_{(OHmax)}$ = –1 mA[1]	1.8 V	V_{CC} – 0.25	V_{CC}	V
		$I_{(OHmax)}$ = –3 mA[2]		V_{CC} – 0.60	V_{CC}	
		$I_{(OHmax)}$ = –2 mA[1]	3 V	V_{CC} – 0.25	V_{CC}	
		$I_{(OHmax)}$ = –6 mA[2]		V_{CC} – 0.60	V_{CC}	
V_{OL}	Low-level output voltage	$I_{(OLmax)}$ = 1 mA[1]	1.8 V	V_{SS}	V_{SS} + 0.25	V
		$I_{(OLmax)}$ = 3 mA[2]		V_{SS}	V_{SS} + 0.60	
		$I_{(OLmax)}$ = 2 mA[1]	3 V	V_{SS}	V_{SS} + 0.25	
		$I_{(OLmax)}$ = 6 mA[2]		V_{SS}	V_{SS} + 0.60	

(1) The maximum total current, $I_{(OHmax)}$ and $I_{(OLmax)}$, for all outputs combined, should not exceed ±48 mA to hold the maximum voltage drop specified.
(2) The maximum total current, $I_{(OHmax)}$ and $I_{(OLmax)}$, for all outputs combined, should not exceed ±100 mA to hold the maximum voltage drop specified.
(3) Selecting reduced drive strength may reduce EMI.

8.13 Output Frequency – Ports P1, P2, and P3

over recommended ranges of supply voltage and operating free-air temperature (unless otherwise noted)

PARAMETER		TEST CONDITIONS		MIN	MAX	UNIT
$f_{Px.y}$	Port output frequency (with load)	P3.4/TA2CLK/SMCLK/S27, C_L = 20 pF, R_L = 1 kΩ[1] or 3.2 kΩ[2] [3]	V_{CC} = 1.8 V, PMMCOREVx = 0		8	MHz
			V_{CC} = 3 V, PMMCOREVx = 3		20	
f_{Port_CLK}	Clock output frequency	P1.0/TA0CLK/ACLK/S39, P3.4/TA2CLK/SMCLK/S27, P2.0/P2MAP0 (P2MAP0 = PM_MCLK), C_L = 20 pF[3]	V_{CC} = 1.8 V, PMMCOREVx = 0		8	MHz
			V_{CC} = 3 V, PMMCOREVx = 3		20	

(1) Full drive strength of port: A resistive divider with 2 × 0.5 kΩ between V_{CC} and V_{SS} is used as load. The output is connected to the center tap of the divider.
(2) Reduced drive strength of port: A resistive divider with 2 × 1.6 kΩ between V_{CC} and V_{SS} is used as load. The output is connected to the center tap of the divider.
(3) The output voltage reaches at least 10% and 90% V_{CC} at the specified toggle frequency.

Copyright © 2021 Texas Instruments Incorporated

8.14 Typical Characteristics – Outputs, Reduced Drive Strength (PxDS.y = 0)

over recommended ranges of supply voltage and operating free-air temperature (unless otherwise noted)

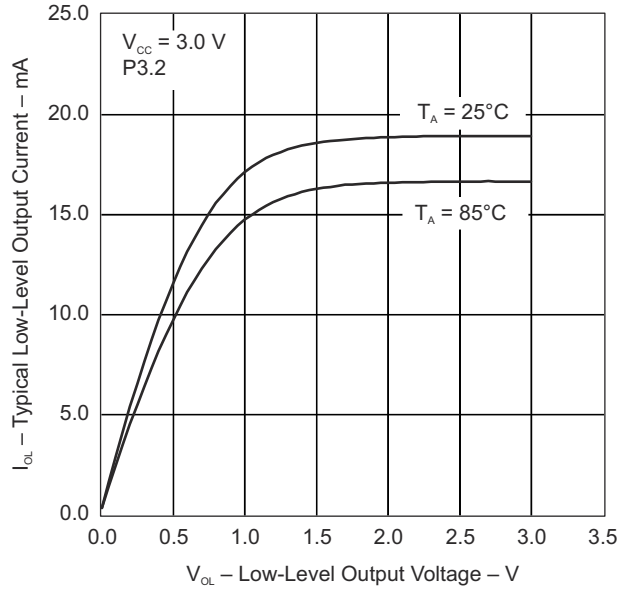

図 8-2. Typical Low-Level Output Current vs Low-Level Output Voltage

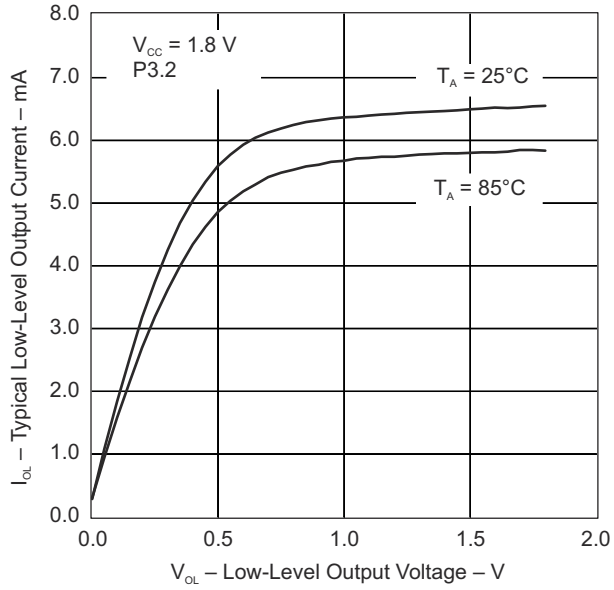

図 8-3. Typical Low-Level Output Current vs Low-Level Output Voltage

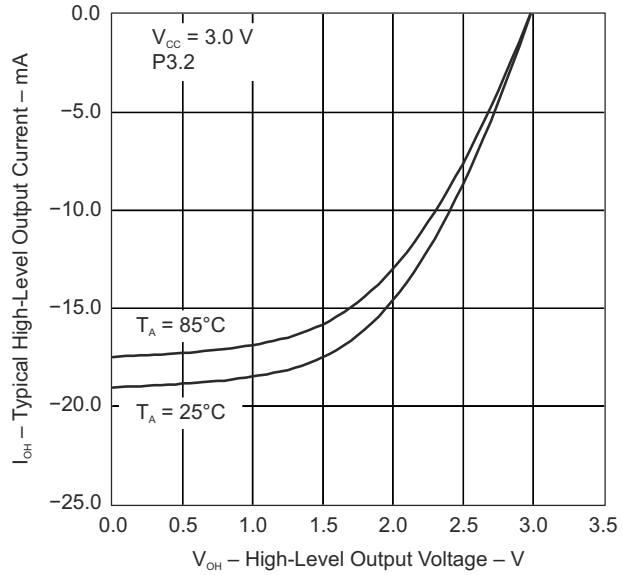

図 8-4. Typical High-Level Output Current vs High-Level Output Voltage

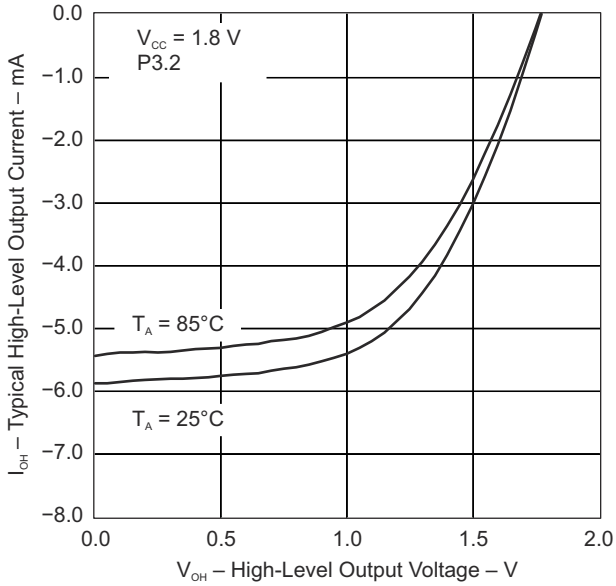

図 8-5. Typical High-Level Output Current vs High-Level Output Voltage

Copyright © 2021 Texas Instruments Incorporated

8.15 Typical Characteristics – Outputs, Full Drive Strength (PxDS.y = 1)

over recommended ranges of supply voltage and operating free-air temperature (unless otherwise noted)

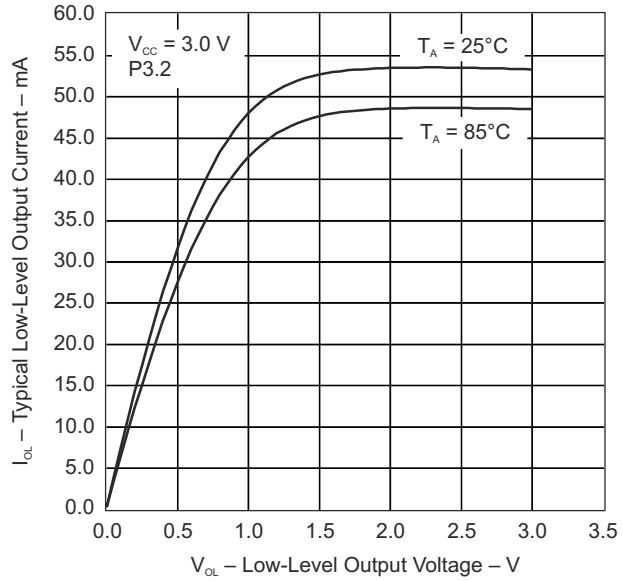

図 8-6. Typical Low-Level Output Current vs Low-Level Output Voltage

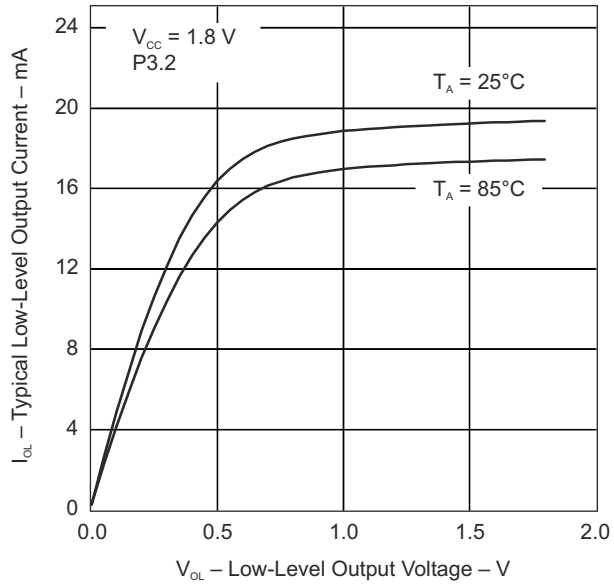

図 8-7. Typical Low-Level Output Current vs Low-Level Output Voltage

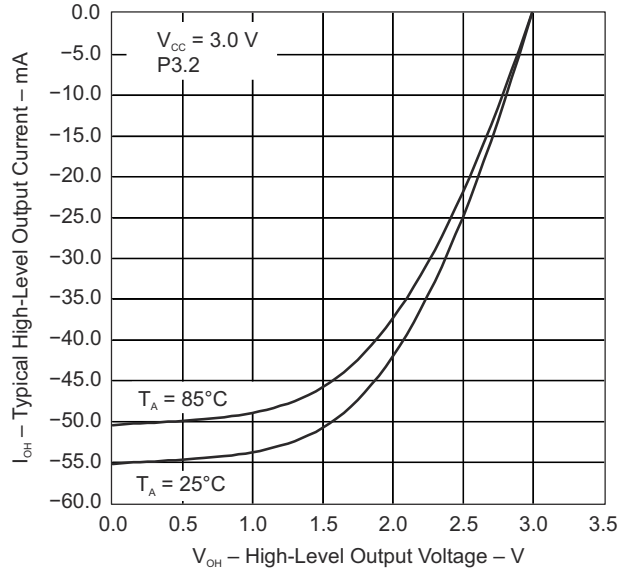

図 8-8. Typical High-Level Output Current vs High-Level Output Voltage

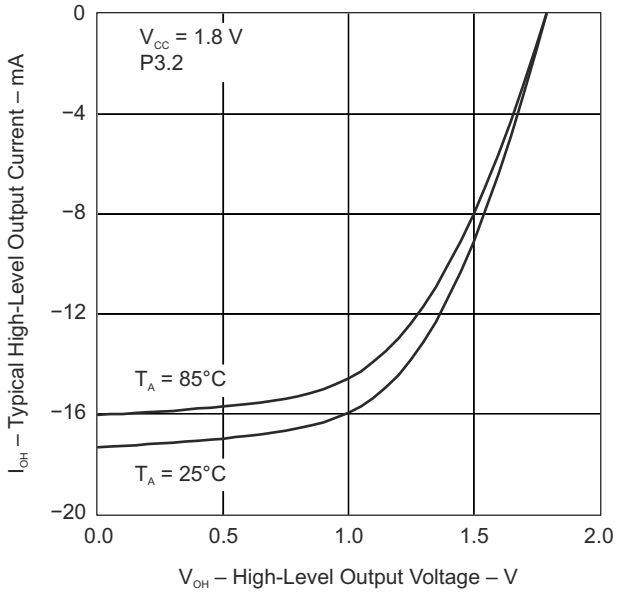

図 8-9. Typical High-Level Output Current vs High-Level Output Voltage

8.16 Crystal Oscillator, XT1, Low-Frequency Mode

over recommended ranges of supply voltage and operating free-air temperature (unless otherwise noted)[5]

PARAMETER		TEST CONDITIONS	V_{CC}	MIN	TYP	MAX	UNIT
$\Delta I_{DVCC,LF}$	Differential XT1 oscillator crystal current consumption from lowest drive setting, LF mode	f_{OSC} = 32768 Hz, XTS = 0, XT1BYPASS = 0, XT1DRIVEx = 1, T_A = 25°C	3 V		0.075		μA
		f_{OSC} = 32768 Hz, XTS = 0, XT1BYPASS = 0, XT1DRIVEx = 2, T_A = 25°C			0.170		
		f_{OSC} = 32768 Hz, XTS = 0, XT1BYPASS = 0, XT1DRIVEx = 3, T_A = 25°C			0.290		
$f_{XT1,LF0}$	XT1 oscillator crystal frequency, LF mode	XTS = 0, XT1BYPASS = 0			32768		Hz
$f_{XT1,LF,SW}$	XT1 oscillator logic-level square-wave input frequency, LF mode	XTS = 0, XT1BYPASS = 1[6] [7]		10	32.768	50	kHz
OA_{LF}	Oscillation allowance for LF crystals[8]	XTS = 0, XT1BYPASS = 0, XT1DRIVEx = 0, $f_{XT1,LF}$ = 32768 Hz, $C_{L,eff}$ = 6 pF			210		kΩ
		XTS = 0, XT1BYPASS = 0, XT1DRIVEx = 1, $f_{XT1,LF}$ = 32768 Hz, $C_{L,eff}$ = 12 pF			300		
$C_{L,eff}$	Integrated effective load capacitance, LF mode[1]	XTS = 0, XCAPx = 0[2]			1		pF
		XTS = 0, XCAPx = 1			5.5		
		XTS = 0, XCAPx = 2			8.5		
		XTS = 0, XCAPx = 3			12.0		
	Duty cycle, LF mode	XTS = 0, Measured at ACLK, $f_{XT1,LF}$ = 32768 Hz		30%		70%	
$f_{Fault,LF}$	Oscillator fault frequency, LF mode[4]	XTS = 0[3]		10		10000	Hz
$t_{START,LF}$	Start-up time, LF mode	f_{OSC} = 32768 Hz, XTS = 0, XT1BYPASS = 0, XT1DRIVEx = 0, T_A = 25°C, $C_{L,eff}$ = 6 pF	3 V		1000		ms
		f_{OSC} = 32768 Hz, XTS = 0, XT1BYPASS = 0, XT1DRIVEx = 3, T_A = 25°C, $C_{L,eff}$ = 12 pF			500		

(1) Includes parasitic bond and package capacitance (approximately 2 pF per pin).
Because the PCB adds additional capacitance, TI recommends verifying the correct load by measuring the ACLK frequency. For a correct setup, the effective load capacitance should always match the specification of the used crystal.
(2) Requires external capacitors at both terminals. Values are specified by crystal manufacturers.
(3) Measured with logic-level input frequency but also applies to operation with crystals.
(4) Frequencies below the MIN specification set the fault flag. Frequencies above the MAX specification do not set the fault flag. Frequencies in between might set the flag.
(5) To improve EMI on the XT1 oscillator, the following guidelines should be observed.
- Keep the trace between the device and the crystal as short as possible.
- Design a good ground plane around the oscillator pins.
- Prevent crosstalk from other clock or data lines into oscillator pins XIN and XOUT.
- Avoid running PCB traces underneath or adjacent to the XIN and XOUT pins.
- Use assembly materials and processes that avoid any parasitic load on the oscillator XIN and XOUT pins.
- If conformal coating is used, make sure that it does not induce capacitive or resistive leakage between the oscillator pins.

(6) When XT1BYPASS is set, XT1 circuit is automatically powered down. Input signal is a digital square wave with parametrics defined in the Schmitt-trigger Inputs section of this datasheet.
(7) Maximum frequency of operation of the entire device cannot be exceeded.

Copyright © 2021 Texas Instruments Incorporated

(8) Oscillation allowance is based on a safety factor of 5 for recommended crystals. The oscillation allowance is a function of the XT1DRIVEx settings and the effective load. In general, comparable oscillator allowance can be achieved based on the following guidelines, but should be evaluated based on the actual crystal selected for the application:

- For XT1DRIVEx = 0, $C_{L,eff} \leq 6$ pF.
- For XT1DRIVEx = 1, 6 pF $\leq C_{L,eff} \leq$ 9 pF.
- For XT1DRIVEx = 2, 6 pF $\leq C_{L,eff} \leq$ 10 pF.
- For XT1DRIVEx = 3, $C_{L,eff} \geq 6$ pF.

8.17 Crystal Oscillator, XT2

over recommended ranges of supply voltage and operating free-air temperature (unless otherwise noted)[(2) (5)]

PARAMETER		TEST CONDITIONS	V_{CC}	MIN	TYP	MAX	UNIT
$I_{DVCC,XT2}$	XT2 oscillator crystal current consumption	f_{OSC} = 4 MHz, XT2OFF = 0, XT2BYPASS = 0, XT2DRIVEx = 0, T_A = 25°C	3 V		200		µA
		f_{OSC} = 12 MHz, XT2OFF = 0, XT2BYPASS = 0, XT2DRIVEx = 1, T_A = 25°C			260		
		f_{OSC} = 20 MHz, XT2OFF = 0, XT2BYPASS = 0, XT2DRIVEx = 2, T_A = 25°C			325		
		f_{OSC} = 32 MHz, XT2OFF = 0, XT2BYPASS = 0, XT2DRIVEx = 3, T_A = 25°C			450		
$f_{XT2,HF0}$	XT2 oscillator crystal frequency, mode 0	XT2DRIVEx = 0, XT2BYPASS = 0[(7)]		4		8	MHz
$f_{XT2,HF1}$	XT2 oscillator crystal frequency, mode 1	XT2DRIVEx = 1, XT2BYPASS = 0[(7)]		8		16	MHz
$f_{XT2,HF2}$	XT2 oscillator crystal frequency, mode 2	XT2DRIVEx = 2, XT2BYPASS = 0[(7)]		16		24	MHz
$f_{XT2,HF3}$	XT2 oscillator crystal frequency, mode 3	XT2DRIVEx = 3, XT2BYPASS = 0[(7)]		24		32	MHz
$f_{XT2,HF,SW}$	XT2 oscillator logic-level square-wave input frequency	XT2BYPASS = 1[(6) (7)]		0.7		32	MHz
OA_{HF}	Oscillation allowance for HF crystals[(8)]	XT2DRIVEx = 0, XT2BYPASS = 0, $f_{XT2,HF0}$ = 6 MHz, $C_{L,eff}$ = 15 pF			450		Ω
		XT2DRIVEx = 1, XT2BYPASS = 0, $f_{XT2,HF1}$ = 12 MHz, $C_{L,eff}$ = 15 pF			320		
		XT2DRIVEx = 2, XT2BYPASS = 0, $f_{XT2,HF2}$ = 20 MHz, $C_{L,eff}$ = 15 pF			200		
		XT2DRIVEx = 3, XT2BYPASS = 0, $f_{XT2,HF3}$ = 32 MHz, $C_{L,eff}$ = 15 pF			200		
$t_{START,HF}$	Start-up time	f_{OSC} = 6 MHz XT2BYPASS = 0, XT2DRIVEx = 0, T_A = 25°C, $C_{L,eff}$ = 15 pF	3 V		0.5		ms
		f_{OSC} = 20 MHz XT2BYPASS = 0, XT2DRIVEx = 3, T_A = 25°C, $C_{L,eff}$ = 15 pF			0.3		
$C_{L,eff}$	Integrated effective load capacitance, HF mode[(1) (2)]				1		pF
	Duty cycle	Measured at ACLK, $f_{XT2,HF2}$ = 20 MHz		40%	50%	60%	
$f_{Fault,HF}$	Oscillator fault frequency[(4)]	XT2BYPASS = 1[(3)]		30		300	kHz

(1) Includes parasitic bond and package capacitance (approximately 2 pF per pin).
Because the PCB adds additional capacitance, TI recommends verifying the correct load by measuring the ACLK frequency. For a correct setup, the effective load capacitance should always match the specification of the used crystal.
(2) Requires external capacitors at both terminals. Values are specified by crystal manufacturers.
(3) Measured with logic-level input frequency but also applies to operation with crystals.

(4) Frequencies below the MIN specification set the fault flag. Frequencies above the MAX specification do not set the fault flag. Frequencies between the MIN and MAX specifications might set the flag.
(5) To improve EMI on the XT2 oscillator the following guidelines should be observed.
- Keep the traces between the device and the crystal as short as possible.
- Design a good ground plane around the oscillator pins.
- Prevent crosstalk from other clock or data lines into oscillator pins XT2IN and XT2OUT.
- Avoid running PCB traces underneath or adjacent to the XT2IN and XT2OUT pins.
- Use assembly materials and processes that avoid any parasitic load on the oscillator XT2IN and XT2OUT pins.
- If conformal coating is used, make sure that it does not induce capacitive or resistive leakage between the oscillator pins.

(6) When XT2BYPASS is set, the XT2 circuit is automatically powered down.
(7) Maximum frequency of operation of the entire device cannot be exceeded.
(8) Oscillation allowance is based on a safety factor of 5 for recommended crystals.

8.18 Internal Very-Low-Power Low-Frequency Oscillator (VLO)

over recommended ranges of supply voltage and operating free-air temperature (unless otherwise noted)

PARAMETER		TEST CONDITIONS	V_{CC}	MIN	TYP	MAX	UNIT
f_{VLO}	VLO frequency	Measured at ACLK	1.8 V to 3.6 V	6	9.4	14	kHz
df_{VLO}/d_T	VLO frequency temperature drift	Measured at ACLK(1)	1.8 V to 3.6 V		0.5		%/°C
df_{VLO}/dV_{CC}	VLO frequency supply voltage drift	Measured at ACLK(2)	1.8 V to 3.6 V		4		%/V
	Duty cycle	Measured at ACLK	1.8 V to 3.6 V	40%	50%	60%	

(1) Calculated using the box method: (MAX(–40°C to +85°C) – MIN(–40°C to +85°C)) / MIN(–40°C to +85°C) / (85°C – (–40°C))
(2) Calculated using the box method: (MAX(1.8 V to 3.6 V) – MIN(1.8 V to 3.6 V)) / MIN(1.8 V to 3.6 V) / (3.6 V – 1.8 V)

8.19 Internal Reference, Low-Frequency Oscillator (REFO)

over recommended ranges of supply voltage and operating free-air temperature (unless otherwise noted)

PARAMETER		TEST CONDITIONS	V_{CC}	MIN	TYP	MAX	UNIT
I_{REFO}	REFO oscillator current consumption	T_A = 25°C	1.8 V to 3.6 V		3		µA
f_{REFO}	REFO frequency calibrated	Measured at ACLK	1.8 V to 3.6 V		32768		Hz
	REFO absolute tolerance calibrated	Full temperature range	1.8 V to 3.6 V			±3.5%	
		T_A = 25°C	3 V			±1.5%	
df_{REFO}/d_T	REFO frequency temperature drift	Measured at ACLK(1)	1.8 V to 3.6 V		0.01		%/°C
df_{REFO}/dV_{CC}	REFO frequency supply voltage drift	Measured at ACLK(2)	1.8 V to 3.6 V		1.0		%/V
	Duty cycle	Measured at ACLK	1.8 V to 3.6 V	40%	50%	60%	
t_{START}	REFO start-up time	40%/60% duty cycle	1.8 V to 3.6 V		25		µs

(1) Calculated using the box method: (MAX(–40°C to +85°C) – MIN(–40°C to +85°C)) / MIN(–40°C to +85°C) / (85°C – (–40°C))
(2) Calculated using the box method: (MAX(1.8 V to 3.6 V) – MIN(1.8 V to 3.6 V)) / MIN(1.8 V to 3.6 V) / (3.6 V – 1.8 V)

Copyright © 2021 Texas Instruments Incorporated

8.20 DCO Frequency

over recommended ranges of supply voltage and operating free-air temperature (unless otherwise noted)

PARAMETER		TEST CONDITIONS	MIN	TYP	MAX	UNIT
$f_{DCO(0,0)}$	DCO frequency (0, 0)	DCORSELx = 0, DCOx = 0, MODx = 0	0.07		0.20	MHz
$f_{DCO(0,31)}$	DCO frequency (0, 31)	DCORSELx = 0, DCOx = 31, MODx = 0	0.70		1.70	MHz
$f_{DCO(1,0)}$	DCO frequency (1, 0)	DCORSELx = 1, DCOx = 0, MODx = 0	0.15		0.36	MHz
$f_{DCO(1,31)}$	DCO frequency (1, 31)	DCORSELx = 1, DCOx = 31, MODx = 0	1.47		3.45	MHz
$f_{DCO(2,0)}$	DCO frequency (2, 0)	DCORSELx = 2, DCOx = 0, MODx = 0	0.32		0.75	MHz
$f_{DCO(2,31)}$	DCO frequency (2, 31)	DCORSELx = 2, DCOx = 31, MODx = 0	3.17		7.38	MHz
$f_{DCO(3,0)}$	DCO frequency (3, 0)	DCORSELx = 3, DCOx = 0, MODx = 0	0.64		1.51	MHz
$f_{DCO(3,31)}$	DCO frequency (3, 31)	DCORSELx = 3, DCOx = 31, MODx = 0	6.07		14.0	MHz
$f_{DCO(4,0)}$	DCO frequency (4, 0)	DCORSELx = 4, DCOx = 0, MODx = 0	1.3		3.2	MHz
$f_{DCO(4,31)}$	DCO frequency (4, 31)	DCORSELx = 4, DCOx = 31, MODx = 0	12.3		28.2	MHz
$f_{DCO(5,0)}$	DCO frequency (5, 0)	DCORSELx = 5, DCOx = 0, MODx = 0	2.5		6.0	MHz
$f_{DCO(5,31)}$	DCO frequency (5, 31)	DCORSELx = 5, DCOx = 31, MODx = 0	23.7		54.1	MHz
$f_{DCO(6,0)}$	DCO frequency (6, 0)	DCORSELx = 6, DCOx = 0, MODx = 0	4.6		10.7	MHz
$f_{DCO(6,31)}$	DCO frequency (6, 31)	DCORSELx = 6, DCOx = 31, MODx = 0	39.0		88.0	MHz
$f_{DCO(7,0)}$	DCO frequency (7, 0)	DCORSELx = 7, DCOx = 0, MODx = 0	8.5		19.6	MHz
$f_{DCO(7,31)}$	DCO frequency (7, 31)	DCORSELx = 7, DCOx = 31, MODx = 0	60		135	MHz
$S_{DCORSEL}$	Frequency step between range DCORSEL and DCORSEL + 1	$S_{RSEL} = f_{DCO(DCORSEL+1,DCO)}/f_{DCO(DCORSEL,DCO)}$	1.2		2.3	ratio
S_{DCO}	Frequency step between tap DCO and DCO + 1	$S_{DCO} = f_{DCO(DCORSEL,DCO+1)}/f_{DCO(DCORSEL,DCO)}$	1.02		1.12	ratio
	Duty cycle	Measured at SMCLK	40%	50%	60%	
df_{DCO}/dT	DCO frequency temperature drift	f_{DCO} = 1 MHz		0.1		%/°C
df_{DCO}/dV_{CC}	DCO frequency voltage drift	f_{DCO} = 1 MHz		1.9		%/V

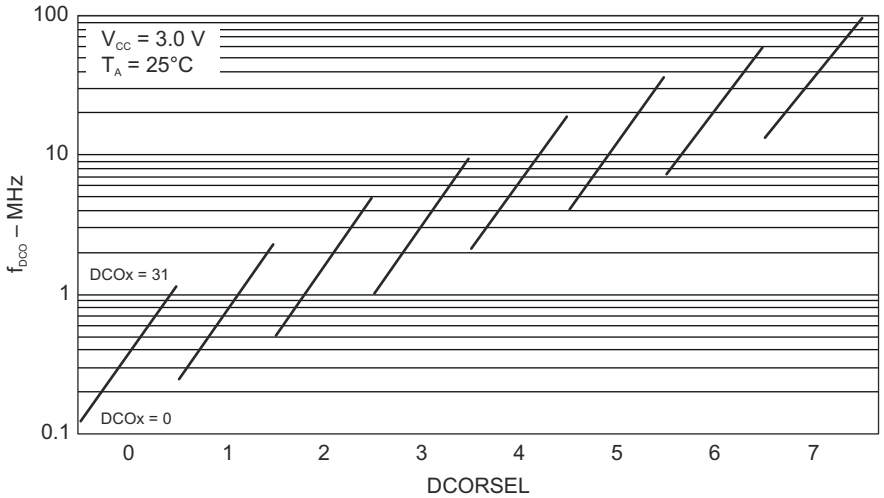

図 8-10. Typical DCO Frequency

8.21 PMM, Brownout Reset (BOR)

over recommended ranges of supply voltage and operating free-air temperature (unless otherwise noted)

PARAMETER		TEST CONDITIONS	MIN	TYP	MAX	UNIT
$V_{(DVCC_BOR_IT-)}$	BOR_H on voltage, DV_{CC} falling level	$\lvert dDV_{CC}/d_t \rvert < 3$ V/s			1.45	V
$V_{(DVCC_BOR_IT+)}$	BOR_H off voltage, DV_{CC} rising level	$\lvert dDV_{CC}/d_t \rvert < 3$ V/s	0.80	1.30	1.50	V
$V_{(DVCC_BOR_hys)}$	BOR_H hysteresis		50		250	mV
t_{RESET}	Pulse duration required at $\overline{RST}$/NMI pin to accept a reset		2			µs

8.22 PMM, Core Voltage

over recommended ranges of supply voltage and operating free-air temperature (unless otherwise noted)

PARAMETER		TEST CONDITIONS	MIN	TYP	MAX	UNIT
V_{CORE3}(AM)	Core voltage, active mode, PMMCOREV = 3	2.4 V ≤ DV_{CC} ≤ 3.6 V, 0 mA ≤ I(V_{CORE}) ≤ 21 mA		1.90		V
V_{CORE2}(AM)	Core voltage, active mode, PMMCOREV = 2	2.2 V ≤ DV_{CC} ≤ 3.6 V, 0 mA ≤ I(V_{CORE}) ≤ 21 mA		1.80		V
V_{CORE1}(AM)	Core voltage, active mode, PMMCOREV = 1	2 V ≤ DV_{CC} ≤ 3.6 V, 0 mA ≤ I(V_{CORE}) ≤ 17 mA		1.60		V
V_{CORE0}(AM)	Core voltage, active mode, PMMCOREV = 0	1.8 V ≤ DV_{CC} ≤ 3.6 V, 0 mA ≤ I(V_{CORE}) ≤ 13 mA		1.40		V
V_{CORE3}(LPM)	Core voltage, low-current mode, PMMCOREV = 3	2.4 V ≤ DV_{CC} ≤ 3.6 V, 0 µA ≤ I(V_{CORE}) ≤ 30 µA		1.94		V
V_{CORE2}(LPM)	Core voltage, low-current mode, PMMCOREV = 2	2.2 V ≤ DV_{CC} ≤ 3.6 V, 0 µA ≤ I(V_{CORE}) ≤ 30 µA		1.84		V
V_{CORE1}(LPM)	Core voltage, low-current mode, PMMCOREV = 1	2 V ≤ DV_{CC} ≤ 3.6 V, 0 µA ≤ I(V_{CORE}) ≤ 30 µA		1.64		V
V_{CORE0}(LPM)	Core voltage, low-current mode, PMMCOREV = 0	1.8 V ≤ DV_{CC} ≤ 3.6 V, 0 µA ≤ I(V_{CORE}) ≤ 30 µA		1.44		V

Copyright © 2021 Texas Instruments Incorporated

8.23 PMM, SVS High Side

over recommended ranges of supply voltage and operating free-air temperature (unless otherwise noted)

PARAMETER		TEST CONDITIONS	MIN	TYP	MAX	UNIT
$I_{(SVSH)}$	SVS current consumption	SVSHE = 0, DV_{CC} = 3.6 V		0		nA
		SVSHE = 1, DV_{CC} = 3.6 V, SVSHFP = 0		200		
		SVSHE = 1, DV_{CC} = 3.6 V, SVSHFP = 1		2.0		µA
$V_{(SVSH_IT-)}$	SVS_H on voltage level(1)	SVSHE = 1, SVSHRVL = 0	1.59	1.64	1.69	V
		SVSHE = 1, SVSHRVL = 1	1.79	1.84	1.91	
		SVSHE = 1, SVSHRVL = 2	1.98	2.04	2.11	
		SVSHE = 1, SVSHRVL = 3	2.10	2.16	2.23	
$V_{(SVSH_IT+)}$	SVS_H off voltage level(1)	SVSHE = 1, SVSMHRRL = 0	1.62	1.74	1.81	V
		SVSHE = 1, SVSMHRRL = 1	1.88	1.94	2.01	
		SVSHE = 1, SVSMHRRL = 2	2.07	2.14	2.21	
		SVSHE = 1, SVSMHRRL = 3	2.20	2.26	2.33	
		SVSHE = 1, SVSMHRRL = 4	2.32	2.40	2.48	
		SVSHE = 1, SVSMHRRL = 5	2.56	2.70	2.84	
		SVSHE = 1, SVSMHRRL = 6	2.85	3.00	3.15	
		SVSHE = 1, SVSMHRRL = 7	2.85	3.00	3.15	
$t_{pd(SVSH)}$	SVS_H propagation delay	SVSHE = 1, dV_{DVCC}/dt = 10 mV/µs, SVSHFP = 1		2.5		µs
		SVSHE = 1, dV_{DVCC}/dt = 1 mV/µs, SVSHFP = 0		20		
$t_{(SVSH)}$	SVS_H on or off delay time	SVSHE = 0→1, SVSHFP = 1		12.5		µs
		SVSHE = 0→1, SVSHFP = 0		100		
dV_{DVCC}/dt	DV_{CC} rise time		0		1000	V/s

(1) The SVS_H settings available depend on the VCORE (PMMCOREVx) setting. See the *Power Management Module and Supply Voltage Supervisor* chapter in the *MSP430F5xx and MSP430F6xx Family User's Guide* on recommended settings and usage.

8.24 PMM, SVM High Side

over recommended ranges of supply voltage and operating free-air temperature (unless otherwise noted)

PARAMETER		TEST CONDITIONS	MIN	TYP	MAX	UNIT
$I_{(SVMH)}$	SVM_H current consumption	SVMHE = 0, DVCC = 3.6 V		0		nA
		SVMHE = 1, DVCC = 3.6 V, SVMHFP = 0		200		
		SVMHE = 1, DVCC = 3.6 V, SVMHFP = 1		2.0		µA
$V_{(SVMH)}$	SVM_H on or off voltage level(1)	SVMHE = 1, SVSMHRRL = 0	1.65	1.74	1.86	V
		SVMHE = 1, SVSMHRRL = 1	1.85	1.94	2.02	
		SVMHE = 1, SVSMHRRL = 2	2.02	2.14	2.22	
		SVMHE = 1, SVSMHRRL = 3	2.18	2.26	2.35	
		SVMHE = 1, SVSMHRRL = 4	2.32	2.40	2.48	
		SVMHE = 1, SVSMHRRL = 5	2.56	2.70	2.84	
		SVMHE = 1, SVSMHRRL = 6	2.85	3.00	3.15	
		SVMHE = 1, SVSMHRRL = 7	2.85	3.00	3.15	
		SVMHE = 1, SVMHOVPE = 1		3.75		
$t_{pd(SVMH)}$	SVM_H propagation delay	SVMHE = 1, dV_{DVCC}/dt = 10 mV/µs, SVMHFP = 1		2.5		µs
		SVMHE = 1, dV_{DVCC}/dt = 1 mV/µs, SVMHFP = 0		20		
$t_{(SVMH)}$	SVM_H on or off delay time	SVMHE = 0→1, SVSMFP = 1		12.5		µs
		SVMHE = 0→1, SVMHFP = 0		100		

(1) The SVM_H settings available depend on the VCORE (PMMCOREVx) setting. See the *Power Management Module and Supply Voltage Supervisor* chapter in the *MSP430F5xx and MSP430F6xx Family User's Guide* on recommended settings and usage.

8.25 PMM, SVS Low Side

over recommended ranges of supply voltage and operating free-air temperature (unless otherwise noted)

PARAMETER		TEST CONDITIONS	MIN	TYP	MAX	UNIT
$I_{(SVSL)}$	SVS_L current consumption	SVSLE = 0, PMMCOREV = 2		0		nA
		SVSLE = 1, PMMCOREV = 2, SVSLFP = 0		200		
		SVSLE = 1, PMMCOREV = 2, SVSLFP = 1		2.0		µA
$t_{pd(SVSL)}$	SVS_L propagation delay	SVSLE = 1, dV_{CORE}/dt = 10 mV/µs, SVSLFP = 1		2.5		µs
		SVSLE = 1, dV_{CORE}/dt = 1 mV/µs, SVSLFP = 0		20		
$t_{(SVSL)}$	SVS_L on or off delay time	SVSLE = 0→1, SVSLFP = 1		12.5		µs
		SVSLE = 0→1, SVSLFP = 0		100		

8.26 PMM, SVM Low Side

over recommended ranges of supply voltage and operating free-air temperature (unless otherwise noted)

PARAMETER		TEST CONDITIONS	MIN	TYP	MAX	UNIT
$I_{(SVML)}$	SVM_L current consumption	SVMLE = 0, PMMCOREV = 2		0		nA
		SVMLE = 1, PMMCOREV = 2, SVMLFP = 0		200		
		SVMLE = 1, PMMCOREV = 2, SVMLFP = 1		2.0		µA
$t_{pd(SVML)}$	SVM_L propagation delay	SVMLE = 1, dV_{CORE}/dt = 10 mV/µs, SVMLFP = 1		2.5		µs
		SVMLE = 1, dV_{CORE}/dt = 1 mV/µs, SVMLFP = 0		20		
$t_{(SVML)}$	SVM_L on or off delay time	SVMLE = 0→1, SVMLFP = 1		12.5		µs
		SVMLE = 0→1, SVMLFP = 0		100		

8.27 Wake-up Times From Low-Power Modes and Reset

over recommended ranges of supply voltage and operating free-air temperature (unless otherwise noted)

PARAMETER		TEST CONDITIONS		MIN	TYP	MAX	UNIT
$t_{WAKE-UP-FAST}$	Wake-up time from LPM2, LPM3, or LPM4 to active mode[1]	PMMCOREV = SVSMLRRL = n (where n = 0, 1, 2, or 3), SVSLFP = 1	f_{MCLK} ≥ 4 MHz		3	6.5	µs
			1 MHz < f_{MCLK} < 4 MHz		4	8.0	
$t_{WAKE-UP-SLOW}$	Wake-up time from LPM2, LPM3, or LPM4 to active mode[2] [3]	PMMCOREV = SVSMLRRL = n (where n = 0, 1, 2, or 3), SVSLFP = 0			150	165	µs
$t_{WAKE-UP-LPM5}$	Wake-up time from LPM3.5 or LPM4.5 to active mode[4]				2	3	ms
$t_{WAKE-UP-RESET}$	Wake-up time from $\overline{RST}$ or BOR event to active mode[4]				2	3	ms

(1) This value represents the time from the wake-up event to the first active edge of MCLK. The wake-up time depends on the performance mode of the low-side supervisor (SVS_L) and low-side monitor (SVM_L). $t_{WAKE-UP-FAST}$ is possible with SVS_L and SVM_L in full performance mode or disabled. For specific register settings, see the *Low-Side SVS and SVM Control and Performance Mode Selection* section in the *Power Management Module and Supply Voltage Supervisor* chapter of the MSP430F5xx and MSP430F6xx Family User's Guide.

(2) This value represents the time from the wake-up event to the first active edge of MCLK. The wake-up time depends on the performance mode of the low-side supervisor (SVS_L) and low-side monitor (SVM_L). $t_{WAKE-UP-SLOW}$ is set with SVS_L and SVM_L in normal mode (low current mode). For specific register settings, see the *Low-Side SVS and SVM Control and Performance Mode Selection* section in the *Power Management Module and Supply Voltage Supervisor* chapter of the MSP430F5xx and MSP430F6xx Family User's Guide.

(3) The wake-up times from LPM0 and LPM1 to AM are not specified. They are proportional to MCLK cycle time but are not affected by the performance mode settings as for LPM2, LPM3, and LPM4.

(4) This value represents the time from the wake-up event to the reset vector execution.

Copyright © 2021 Texas Instruments Incorporated

8.28 Timer_A, Timers TA0, TA1, and TA2

over recommended ranges of supply voltage and operating free-air temperature (unless otherwise noted)

PARAMETER		TEST CONDITIONS	V_{CC}	MIN	MAX	UNIT
f_{TA}	Timer_A input clock frequency	Internal: SMCLK or ACLK, External: TACLK, Duty cycle = 50% ±10%	1.8 V, 3 V		20	MHz
$t_{TA,cap}$	Timer_A capture timing	All capture inputs, Minimum pulse duration required for capture	1.8 V, 3 V	20		ns

8.29 Timer_B, Timer TB0

over recommended ranges of supply voltage and operating free-air temperature (unless otherwise noted)

PARAMETER		TEST CONDITIONS	V_{CC}	MIN	MAX	UNIT
f_{TB}	Timer_B input clock frequency	Internal: SMCLK or ACLK, External: TBCLK, Duty cycle = 50% ±10%	1.8 V, 3 V		20	MHz
$t_{TB,cap}$	Timer_B capture timing	All capture inputs, Minimum pulse duration required for capture	1.8 V, 3 V	20		ns

Copyright © 2021 Texas Instruments Incorporated

8.30 Battery Backup

over operating free-air temperature range (unless otherwise noted)

PARAMETER		TEST CONDITIONS		V_{CC}	MIN	TYP	MAX	UNIT
I_{VBAT}	Current into VBAT terminal if no primary battery is connected	VBAT = 1.7 V, DVCC not connected, RTC running	T_A = –40°C			0.43		µA
			T_A = 25°C			0.52		
			T_A = 60°C			0.58		
			T_A = 85°C			0.64		
		VBAT = 2.2 V, DVCC not connected, RTC running	T_A = –40°C			0.50		
			T_A = 25°C			0.59		
			T_A = 60°C			0.64		
			T_A = 85°C			0.71		
		VBAT = 3 V, DVCC not connected, RTC running	T_A = –40°C			0.68		
			T_A = 25°C			0.75		
			T_A = 60°C			0.79		
			T_A = 85°C			0.86		
V_{SWITCH}	Switch-over level (V_{CC} to VBAT)	C_{VCC} = 4.7 µF	General			V_{SVSH_IT-}		V
			SVSHRL = 0		1.59		1.69	
			SVSHRL = 1		1.79		1.91	
			SVSHRL = 2		1.98		2.11	
			SVSHRL = 3		2.10		2.23	
R_{ON_VBAT}	ON-resistance of switch between VBAT and VBAK	V_{BAT} = 1.8 V		0 V		0.35	1	kΩ
V_{BAT3}	VBAT to ADC input channel 12: V_{BAT} divided, V_{BAT3} = V_{BAT}/3			1.8 V		0.6	±5%	V
				3 V		1.0	±5%	
				3.6 V		1.2	±5%	
$t_{Sample, VBAT3}$	VBAT to ADC: Sampling time required if VBAT3 selected	ADC12ON = 1, Error of conversion result ≤ 1 LSB			1000			ns
V_{CHVx}	Charger end voltage	CHVx = 2			2.65	2.7	2.9	V
R_{CHARGE}	Charge limiting resistor	CHCx = 1					5	kΩ
		CHCx = 2					10	
		CHCx = 3					20	

Copyright © 2021 Texas Instruments Incorporated

8.31 USCI (UART Mode)

over recommended ranges of supply voltage and operating free-air temperature (unless otherwise noted)

PARAMETER		TEST CONDITIONS	V_{CC}	MIN	MAX	UNIT
f_{USCI}	USCI input clock frequency	Internal: SMCLK or ACLK, External: UCLK, Duty cycle = 50% ±10%			f_{SYSTEM}	MHz
f_{BITCLK}	BITCLK clock frequency (equals baud rate in MBaud)				1	MHz
t_T	UART receive deglitch time[(1)]		2.2 V	50	600	ns
			3 V	50	600	

(1) Pulses on the UART receive input (UCxRX) shorter than the UART receive deglitch time are suppressed. To ensure that pulses are correctly recognized their width should exceed the maximum specification of the deglitch time.

8.32 USCI (SPI Master Mode)

over recommended ranges of supply voltage and operating free-air temperature (unless otherwise noted)[(1)]
(see 図 8-11 and 図 8-12)

PARAMETER		TEST CONDITIONS	V_{CC}	MIN	MAX	UNIT
f_{USCI}	USCI input clock frequency	SMCLK or ACLK, Duty cycle = 50% ±10%			f_{SYSTEM}	MHz
$t_{SU,MI}$	SOMI input data setup time	PMMCOREV = 0	1.8 V	55		ns
			3 V	38		
		PMMCOREV = 3	2.4 V	30		
			3 V	25		
$t_{HD,MI}$	SOMI input data hold time	PMMCOREV = 0	1.8 V	0		ns
			3 V	0		
		PMMCOREV = 3	2.4 V	0		
			3 V	0		
$t_{VALID,MO}$	SIMO output data valid time[(2)]	UCLK edge to SIMO valid, C_L = 20 pF, PMMCOREV = 0	1.8 V		20	ns
			3 V		18	
		UCLK edge to SIMO valid, C_L = 20 pF, PMMCOREV = 3	2.4 V		16	
			3 V		15	
$t_{HD,MO}$	SIMO output data hold time[(3)]	C_L = 20 pF, PMMCOREV = 0	1.8 V	–10		ns
			3 V	–8		
		C_L = 20 pF, PMMCOREV = 3	2.4 V	–10		
			3 V	–8		

(1) $f_{UCxCLK} = 1/2t_{LO/HI}$ with $t_{LO/HI} \geq \max(t_{VALID,MO(USCI)} + t_{SU,SI(Slave)}, t_{SU,MI(USCI)} + t_{VALID,SO(Slave)})$
For the slave parameters $t_{SU,SI(Slave)}$ and $t_{VALID,SO(Slave)}$, see the SPI parameters of the attached slave.
(2) Specifies the time to drive the next valid data to the SIMO output after the output changing UCLK clock edge. See the timing diagrams in 図 8-11 and 図 8-12.
(3) Specifies how long data on the SIMO output is valid after the output changing UCLK clock edge. Negative values indicate that the data on the SIMO output can become invalid before the output changing clock edge observed on UCLK. See the timing diagrams in 図 8-11 and 図 8-12.

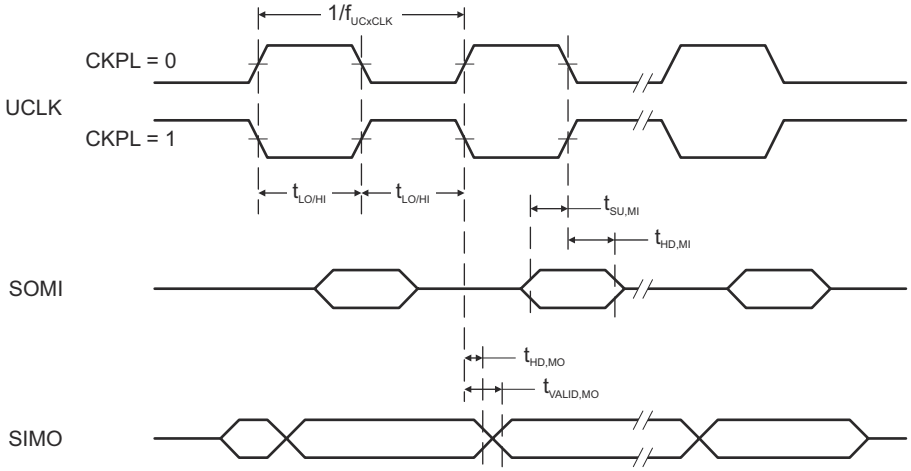

図 8-11. SPI Master Mode, CKPH = 0

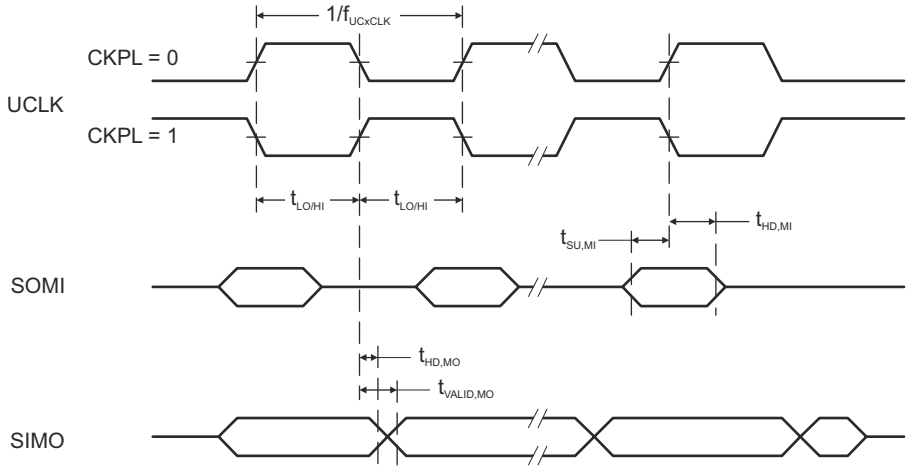

図 8-12. SPI Master Mode, CKPH = 1

Copyright © 2021 Texas Instruments Incorporated

8.33 USCI (SPI Slave Mode)

over recommended ranges of supply voltage and operating free-air temperature (unless otherwise noted)[1]
(see 図 8-13 and 図 8-14)

PARAMETER		TEST CONDITIONS	V_{CC}	MIN	MAX	UNIT
$t_{STE,LEAD}$	STE lead time, STE low to clock	PMMCOREV = 0	1.8 V	11		ns
			3 V	8		
		PMMCOREV = 3	2.4 V	7		
			3 V	6		
$t_{STE,LAG}$	STE lag time, Last clock to STE high	PMMCOREV = 0	1.8 V	3		ns
			3 V	3		
		PMMCOREV = 3	2.4 V	3		
			3 V	3		
$t_{STE,ACC}$	STE access time, STE low to SOMI data out	PMMCOREV = 0	1.8 V		66	ns
			3 V		50	
		PMMCOREV = 3	2.4 V		36	
			3 V		30	
$t_{STE,DIS}$	STE disable time, STE high to SOMI high impedance	PMMCOREV = 0	1.8 V		30	ns
			3 V		23	
		PMMCOREV = 3	2.4 V		16	
			3 V		13	
$t_{SU,SI}$	SIMO input data setup time	PMMCOREV = 0	1.8 V	5		ns
			3 V	5		
		PMMCOREV = 3	2.4 V	2		
			3 V	2		
$t_{HD,SI}$	SIMO input data hold time	PMMCOREV = 0	1.8 V	5		ns
			3 V	5		
		PMMCOREV = 3	2.4 V	5		
			3 V	5		
$t_{VALID,SO}$	SOMI output data valid time[2]	UCLK edge to SOMI valid, C_L = 20 pF, PMMCOREV = 0	1.8 V		76	ns
			3 V		60	
		UCLK edge to SOMI valid, C_L = 20 pF, PMMCOREV = 3	2.4 V		44	
			3 V		40	
$t_{HD,SO}$	SOMI output data hold time[3]	C_L = 20 pF, PMMCOREV = 0	1.8 V	18		ns
			3 V	12		
		C_L = 20 pF, PMMCOREV = 3	2.4 V	10		
			3 V	8		

(1) $f_{UCxCLK} = 1/2t_{LO/HI}$ with $t_{LO/HI} \geq \max(t_{VALID,MO(Master)} + t_{SU,SI(USCI)}, t_{SU,MI(Master)} + t_{VALID,SO(USCI)})$
For the master parameters $t_{SU,MI(Master)}$ and $t_{VALID,MO(Master)}$, see the SPI parameters of the attached master.

(2) Specifies the time to drive the next valid data to the SOMI output after the output changing UCLK clock edge. See the timing diagrams in 図 8-13 and 図 8-14.

(3) Specifies how long data on the SOMI output is valid after the output changing UCLK clock edge. See the timing diagrams in 図 8-13 and 図 8-14.

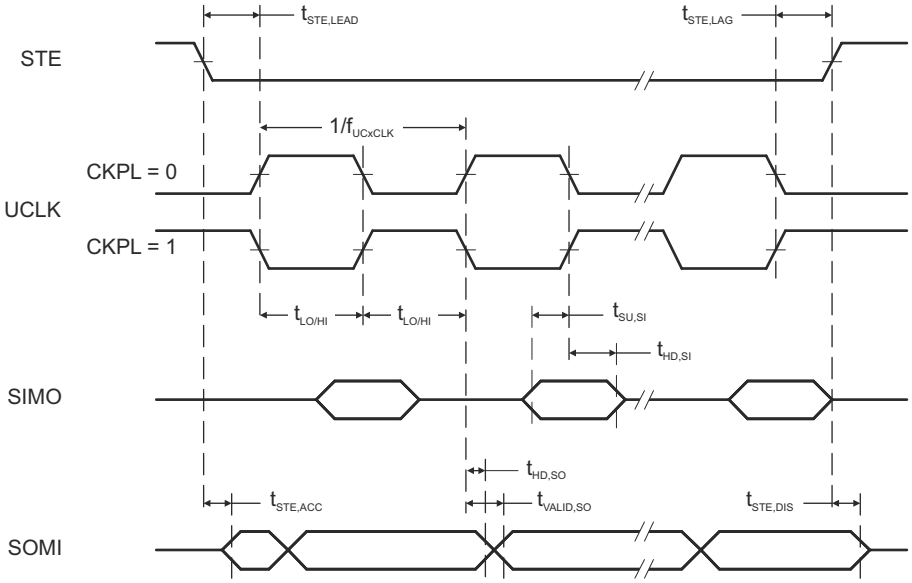

図 8-13. SPI Slave Mode, CKPH = 0

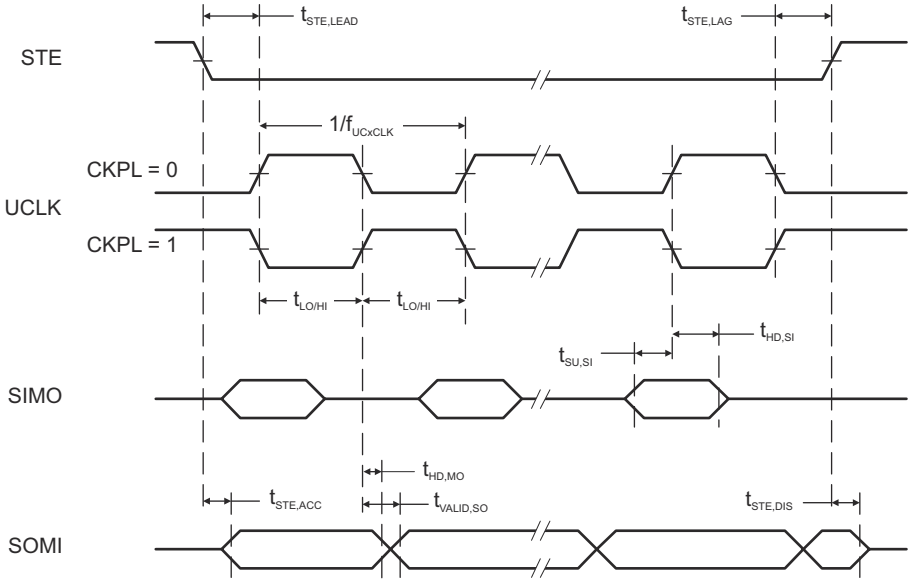

図 8-14. SPI Slave Mode, CKPH = 1

Copyright © 2021 Texas Instruments Incorporated

8.34 USCI (I^2C Mode)

over recommended ranges of supply voltage and operating free-air temperature (unless otherwise noted) (see 図 8-15)

PARAMETER		TEST CONDITIONS	V_{CC}	MIN	MAX	UNIT
f_{USCI}	USCI input clock frequency	Internal: SMCLK or ACLK, External: UCLK Duty cycle = 50% ±10%			f_{SYSTEM}	MHz
f_{SCL}	SCL clock frequency		2.2 V, 3 V	0	400	kHz
$t_{HD,STA}$	Hold time (repeated) START	f_{SCL} ≤ 100 kHz	2.2 V, 3 V	4.0		μs
		f_{SCL} > 100 kHz		0.6		
$t_{SU,STA}$	Setup time for a repeated START	f_{SCL} ≤ 100 kHz	2.2 V, 3 V	4.7		μs
		f_{SCL} > 100 kHz		0.6		
$t_{HD,DAT}$	Data hold time		2.2 V, 3 V	0		ns
$t_{SU,DAT}$	Data setup time		2.2 V, 3 V	250		ns
$t_{SU,STO}$	Setup time for STOP	f_{SCL} ≤ 100 kHz	2.2 V, 3 V	4.0		μs
		f_{SCL} > 100 kHz		0.6		
t_{SP}	Pulse duration of spikes suppressed by input filter		2.2 V	50	600	ns
			3 V	50	600	

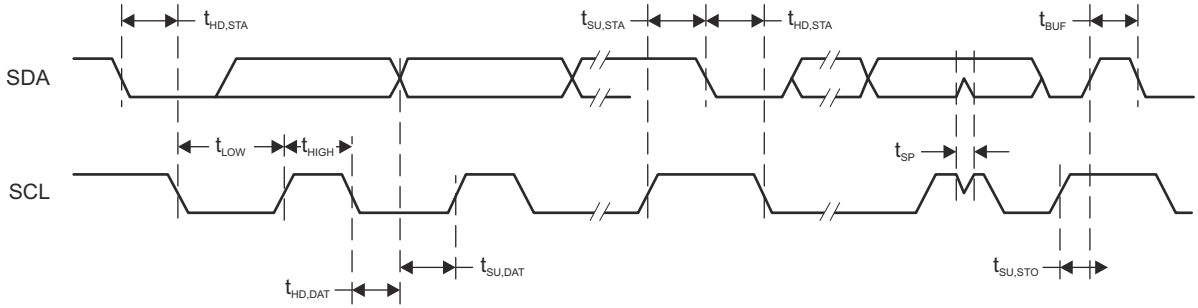

図 8-15. I^2C Mode Timing

8.35 LCD_B, Recommended Operating Conditions

PARAMETER		CONDITIONS	MIN	NOM	MAX	UNIT
$V_{CC,LCD_B,CP\ en,3.6}$	Supply voltage range, charge pump enabled, $V_{LCD} \leq 3.6$ V	LCDCPEN = 1, 0000 < VLCDx ≤ 1111 (charge pump enabled, $V_{LCD} \leq 3.6$ V)	2.2		3.6	V
$V_{CC,LCD_B,CP\ en,3.3}$	Supply voltage range, charge pump enabled, $V_{LCD} \leq 3.3$ V	LCDCPEN = 1, 0000 < VLCDx ≤ 1100 (charge pump enabled, $V_{LCD} \leq 3.3$ V)	2.0		3.6	V
$V_{CC,LCD_B,int.\ bias}$	Supply voltage range, internal biasing, charge pump disabled	LCDCPEN = 0, VLCDEXT = 0	2.4		3.6	V
$V_{CC,LCD_B,ext.\ bias}$	Supply voltage range, external biasing, charge pump disabled	LCDCPEN = 0, VLCDEXT = 0	2.4		3.6	V
$V_{CC,LCD_B,VLCDEXT}$	Supply voltage range, external LCD voltage, internal or external biasing, charge pump disabled	LCDCPEN = 0, VLCDEXT = 1	2.0		3.6	V
$V_{LCDCAP/R33}$	External LCD voltage at LCDCAP/R33, internal or external biasing, charge pump disabled	LCDCPEN = 0, VLCDEXT = 1	2.4		3.6	V
C_{LCDCAP}	Capacitor on LCDCAP when charge pump enabled	LCDCPEN = 1, VLCDx > 0000 (charge pump enabled)	4.7	4.7	10	µF
f_{Frame}	LCD frame frequency range	$f_{LCD} = 2 \times mux \times f_{FRAME}$ (mux = 1 (static), 2, 3, 4)	0		100	Hz
$f_{ACLK,in}$	ACLK input frequency range		30	32	40	kHz
C_{Panel}	Panel capacitance	100-Hz frame frequency			10000	pF
V_{R33}	Analog input voltage at R33	LCDCPEN = 0, VLCDEXT = 1	2.4		V_{CC} + 0.2	V
$V_{R23,1/3bias}$	Analog input voltage at R23	LCDREXT = 1, LCDEXTBIAS = 1, LCD2B = 0	V_{R13}	V_{R03} + 2/3 × (V_{R33} – V_{R03})	V_{R33}	V
$V_{R13,1/3bias}$	Analog input voltage at R13 with 1/3 biasing	LCDREXT = 1, LCDEXTBIAS = 1, LCD2B = 0	V_{R03}	V_{R03} + 1/3 × (V_{R33} – V_{R03})	V_{R23}	V
$V_{R13,1/2bias}$	Analog input voltage at R13 with 1/2 biasing	LCDREXT = 1, LCDEXTBIAS = 1, LCD2B = 1	V_{R03}	V_{R03} + 1/2 × (V_{R33} – V_{R03})	V_{R33}	V
V_{R03}	Analog input voltage at R03	R0EXT = 1	V_{SS}			V
V_{LCD}-V_{R03}	Voltage difference between V_{LCD} and R03	LCDCPEN = 0, R0EXT = 1	2.4		V_{CC}+0.2	V
$V_{LCDREF/R13}$	External LCD reference voltage applied at LCDREF/R13	VLCDREFx = 01	0.8	1.2	1.5	V

Copyright © 2021 Texas Instruments Incorporated

8.36 LCD_B, Electrical Characteristics

over operating free-air temperature range (unless otherwise noted)

PARAMETER		TEST CONDITIONS	V_{CC}	MIN	TYP	MAX	UNIT
V_{LCD}	LCD voltage	VLCDx = 0000, VLCDEXT = 0	2.4 V to 3.6 V		V_{CC}		V
		LCDCPEN = 1, VLCDx = 0001	2 V to 3.6 V		2.60		
		LCDCPEN = 1, VLCDx = 0010	2 V to 3.6 V		2.66		
		LCDCPEN = 1, VLCDx = 0011	2 V to 3.6 V		2.72		
		LCDCPEN = 1, VLCDx = 0100	2 V to 3.6 V		2.79		
		LCDCPEN = 1, VLCDx = 0101	2 V to 3.6 V		2.85		
		LCDCPEN = 1, VLCDx = 0110	2 V to 3.6 V		2.92		
		LCDCPEN = 1, VLCDx = 0111	2 V to 3.6 V		2.98		
		LCDCPEN = 1, VLCDx = 1000	2 V to 3.6 V		3.05		
		LCDCPEN = 1, VLCDx = 1001	2 V to 3.6 V		3.10		
		LCDCPEN = 1, VLCDx = 1010	2 V to 3.6 V		3.17		
		LCDCPEN = 1, VLCDx = 1011	2 V to 3.6 V		3.24		
		LCDCPEN = 1, VLCDx = 1100	2 V to 3.6 V		3.30		
		LCDCPEN = 1, VLCDx = 1101	2.2 V to 3.6 V		3.36		
		LCDCPEN = 1, VLCDx = 1110	2.2 V to 3.6 V		3.42		
		LCDCPEN = 1, VLCDx = 1111	2.2 V to 3.6 V		3.48	3.6	
$I_{CC,Peak,CP}$	Peak supply currents due to charge pump activities	LCDCPEN = 1, VLCDx = 1111	2.2 V		400		µA
$t_{LCD,CP,on}$	Time to charge C_{LCD} when discharged	C_{LCD} = 4.7 µF, LCDCPEN = 0→1, VLCDx = 1111	2.2 V		100	500	ms
$I_{CP,Load}$	Maximum charge pump load current	LCDCPEN = 1, VLCDx = 1111	2.2 V	50			µA
$R_{LCD,Seg}$	LCD driver output impedance, segment lines	LCDCPEN = 1, VLCDx = 1000, I_{LOAD} = ±10 µA	2.2 V			10	kΩ
$R_{LCD,COM}$	LCD driver output impedance, common lines	LCDCPEN = 1, VLCDx = 1000, I_{LOAD} = ±10 µA	2.2 V			10	kΩ

Copyright © 2021 Texas Instruments Incorporated

8.37 12-Bit ADC, Power Supply and Input Range Conditions

over recommended ranges of supply voltage and operating free-air temperature (unless otherwise noted)[2]

PARAMETER		TEST CONDITIONS	V_{CC}	MIN	TYP	MAX	UNIT
AV_{CC}	Analog supply voltage	AVCC and DVCC are connected together, AVSS and DVSS are connected together, $V_{(AVSS)} = V_{(DVSS)} = 0$ V		2.2		3.6	V
$V_{(Ax)}$	Analog input voltage range[3]	All ADC12 analog input pins Ax		0		AV_{CC}	V
I_{ADC12_A}	Operating supply current into AV_{CC} terminal[4]	$f_{ADC12CLK}$ = 5 MHz[1]	2.2 V		150	200	µA
			3 V		150	250	
C_I	Input capacitance	Only one terminal Ax can be selected at one time	2.2 V		20	25	pF
R_I	Input MUX ON resistance	$0 V \le V_{IN} \le V_{(AVCC)}$		10	200	1900	Ω

(1) ADC12ON = 1, REFON = 0, SHT0 = 0, SHT1 = 0, ADC12DIV = 0
(2) The leakage current is specified by the digital I/O input leakage.
(3) The analog input voltage range must be within the selected reference voltage range V_{R+} to V_{R-} for valid conversion results. If the reference voltage is supplied by an external source or if the internal voltage is used and REFOUT = 1, then decoupling capacitors are required. See セクション 8.43 and セクション 8.44.
(4) The internal reference supply current is not included in current consumption parameter I_{ADC12}.

8.38 12-Bit ADC, Timing Parameters

over recommended ranges of supply voltage and operating free-air temperature (unless otherwise noted)

PARAMETER		TEST CONDITIONS	V_{CC}	MIN	TYP	MAX	UNIT
$f_{ADC12CLK}$	ADC conversion clock	For specified performance of ADC12 linearity parameters using an external reference voltage or AVCC as reference[1]	2.2 V, 3 V	0.45	4.8	5.0	MHz
		For specified performance of ADC12 linearity parameters using the internal reference[2]		0.45	2.4	4.0	
		For specified performance of ADC12 linearity parameters using the internal reference[3]		0.45	2.4	2.7	
$f_{ADC12OSC}$	Internal ADC12 oscillator[5]	ADC12DIV = 0, $f_{ADC12CLK} = f_{ADC12OSC}$	2.2 V, 3 V	4.2	4.8	5.4	MHz
$t_{CONVERT}$	Conversion time	REFON = 0, Internal oscillator, ADC12OSC used for ADC conversion clock	2.2 V, 3 V	2.4		3.1	µs
		External $f_{ADC12CLK}$ from ACLK, MCLK or SMCLK, ADC12SSEL ≠ 0			13 × 1 / $f_{ADC12CLK}$		
t_{Sample}	Sampling time	R_S = 400 Ω, R_I = 200 Ω, C_I = 20 pF, $\tau = (R_S + R_I) \times C_I$ [4]	2.2 V, 3 V	1000			ns

(1) REFOUT = 0, external reference voltage: SREF2 = 0, SREF1 = 1, SREF0 = 0. AVCC as reference voltage: SREF2 = 0, SREF1 = 0, SREF0 = 0. The specified performance of the ADC12 linearity is ensured when using the ADC12OSC. For other clock sources, the specified performance of the ADC12 linearity is ensured with $f_{ADC12CLK}$ maximum of 5 MHz.
(2) SREF2 = 0, SREF1 = 1, SREF0 = 0, ADC12SR = 0, REFOUT = 1
(3) SREF2 = 0, SREF1 = 1, SREF0 = 0, ADC12SR = 0, REFOUT = 0. The specified performance of the ADC12 linearity is ensured when using the ADC12OSC divided by 2.
(4) Approximately 10 Tau (τ) are needed to get an error of less than ±0.5 LSB:
$t_{Sample} = \ln(2^{n+1}) \times (R_S + R_I) \times C_I + 800$ ns, where n = ADC resolution = 12, R_S = external source resistance
(5) The ADC12OSC is sourced directly from MODOSC inside the UCS.

Copyright © 2021 Texas Instruments Incorporated

8.39 12-Bit ADC, Linearity Parameters Using an External Reference Voltage

over recommended ranges of supply voltage and operating free-air temperature (unless otherwise noted)

PARAMETER		TEST CONDITIONS	V_{CC}	MIN	TYP	MAX	UNIT
E_I	Integral linearity error(2)	1.4 V ≤ dVREF ≤ 1.6 V(1)	2.2 V, 3 V			±2	LSB
		1.6 V < dVREF (1)				±1.7	
E_D	Differential linearity error(2)	See (1)	2.2 V, 3 V			±1	LSB
E_O	Offset error(3)	dVREF ≤ 2.2 V(1)	2.2 V, 3 V		±3	±5.6	LSB
		dVREF > 2.2 V(1)	2.2 V, 3 V		±1.5	±3.5	
E_G	Gain error(3)	See (1)	2.2 V, 3 V		±1	±2.5	LSB
E_T	Total unadjusted error	dVREF ≤ 2.2 V(1)	2.2 V, 3 V		±3.5	±7.1	LSB
		dVREF > 2.2 V(1)	2.2 V, 3 V		±2	±5	

(1) The external reference voltage is selected by: SREF2 = 0 or 1, SREF1 = 1, SREF0 = 0. dVREF = V_{R+} - V_{R-}. V_{R+} < AVCC. V_{R-} > AVSS. Unless otherwise mentioned, dVREF > 1.5 V. Impedance of the external reference voltage R < 100 Ω, and two decoupling capacitors, 10 µF and 100 nF, should be connected to VREF+/VREF- to decouple the dynamic current. See also the *MSP430F5xx and MSP430F6xx Family User's Guide*.
(2) Parameters are derived using the histogram method.
(3) Parameters are derived using a best fit curve.

8.40 12-Bit ADC, Linearity Parameters Using AVCC as Reference Voltage

over recommended ranges of supply voltage and operating free-air temperature (unless otherwise noted)

PARAMETER		TEST CONDITIONS	V_{CC}	MIN	TYP	MAX	UNIT
E_I	Integral linearity error(2)	See (1)	2.2 V, 3 V			±1.7	LSB
E_D	Differential linearity error(2)	See (1)	2.2 V, 3 V			±1	LSB
E_O	Offset error(3)	See (1)	2.2 V, 3 V		±1	±2	LSB
E_G	Gain error(3)	See (1)	2.2 V, 3 V		±2	±4	LSB
E_T	Total unadjusted error	See (1)	2.2 V, 3 V		±2	±5	LSB

(1) AVCC as reference voltage is selected by: SREF2 = 0, SREF1 = 0, SREF0 = 0.
(2) Parameters are derived using the histogram method.
(3) Parameters are derived using a best fit curve.

8.41 12-Bit ADC, Linearity Parameters Using the Internal Reference Voltage

over recommended ranges of supply voltage and operating free-air temperature (unless otherwise noted)

PARAMETER		TEST CONDITIONS(1)		V_{CC}	MIN	TYP	MAX	UNIT
E_I	Integral linearity error(2)	ADC12SR = 0, REFOUT = 1	$f_{ADC12CLK}$ ≤ 4.0 MHz	2.2 V, 3 V			±1.7	LSB
		ADC12SR = 0, REFOUT = 0	$f_{ADC12CLK}$ ≤ 2.7 MHz				±2.5	
E_D	Differential linearity error(2)	ADC12SR = 0, REFOUT = 1	$f_{ADC12CLK}$ ≤ 4.0 MHz	2.2 V, 3 V	–1		+1.5	LSB
		ADC12SR = 0, REFOUT = 1	$f_{ADC12CLK}$ ≤ 2.7 MHz				±1	
		ADC12SR = 0, REFOUT = 0	$f_{ADC12CLK}$ ≤ 2.7 MHz		–1		+2.5	
E_O	Offset error(3)	ADC12SR = 0, REFOUT = 1	$f_{ADC12CLK}$ ≤ 4.0 MHz	2.2 V, 3 V		±2	±4	LSB
		ADC12SR = 0, REFOUT = 0	$f_{ADC12CLK}$ ≤ 2.7 MHz			±2	±4	
E_G	Gain error(3)	ADC12SR = 0, REFOUT = 1	$f_{ADC12CLK}$ ≤ 4.0 MHz	2.2 V, 3 V		±1	±2.5	LSB
		ADC12SR = 0, REFOUT = 0	$f_{ADC12CLK}$ ≤ 2.7 MHz				±1%(4)	VREF
E_T	Total unadjusted error	ADC12SR = 0, REFOUT = 1	$f_{ADC12CLK}$ ≤ 4.0 MHz	2.2 V, 3 V		±2	±5	LSB
		ADC12SR = 0, REFOUT = 0	$f_{ADC12CLK}$ ≤ 2.7 MHz				±1%(4)	VREF

(1) The external reference voltage is selected by: SREF2 = 0, SREF1 = 0, SREF0 = 1. dVREF = V_{R+} - V_{R-}.
(2) Parameters are derived using the histogram method.
(3) Parameters are derived using a best fit curve.
(4) The gain error and the total unadjusted error are dominated by the accuracy of the integrated reference module absolute accuracy. In this mode the reference voltage used by the ADC12_A is not available on a pin.

Copyright © 2021 Texas Instruments Incorporated

8.42 12-Bit ADC, Temperature Sensor and Built-In V_{MID}

over recommended ranges of supply voltage and operating free-air temperature (unless otherwise noted)[1]

PARAMETER		TEST CONDITIONS	V_{CC}	MIN	TYP	MAX	UNIT
V_{SENSOR}	Temperature sensor voltage[2] (see)図 8-16	ADC12ON = 1, INCH = 0Ah, T_A = 0°C	2.2 V		680		mV
			3 V		680		
TC_{SENSOR}	Temperature coefficient of sensor[2]	ADC12ON = 1, INCH = 0Ah	2.2 V		2.25		mV/°C
			3 V		2.25		
$t_{SENSOR(sample)}$	Sample time required if channel 10 is selected[3]	ADC12ON = 1, INCH = 0Ah, Error of conversion result ≤ 1 LSB	2.2 V	100			µs
			3 V	100			
V_{MID}	AV_{CC} divider at channel 11	ADC12ON = 1, INCH = 0Bh, $V_{MID} \approx 0.5 \times V_{AVCC}$	2.2 V	1.06	1.1	1.14	V
			3 V	1.46	1.5	1.54	
$t_{VMID(sample)}$	Sample time required if channel 11 is selected[4]	ADC12ON = 1, INCH = 0Bh, Error of conversion result ≤ 1 LSB	2.2 V, 3 V	1000			ns

(1) The temperature sensor is provided by the REF module. See the REF module parametric, I_{REF+}, regarding the current consumption of the temperature sensor.
(2) The temperature sensor offset can be significant. TI recommends a single-point calibration to minimize the offset error of the built-in temperature sensor. The TLV structure contains calibration values for 30°C ±3°C and 85°C ±3°C for each of the available reference voltage levels. The sensor voltage can be computed as $V_{SENSE} = TC_{SENSOR} \times (\text{Temperature,°C}) + V_{SENSOR}$, where TC_{SENSOR} and V_{SENSOR} can be computed from the calibration values for higher accuracy. See also the *MSP430F5xx and MSP430F6xx Family User's Guide*.
(3) The typical equivalent impedance of the sensor is 51 kΩ. The sample time required includes the sensor-on time $t_{SENSOR(on)}$.
(4) The on-time $t_{VMID(on)}$ is included in the sampling time $t_{VMID(sample)}$; no additional on time is needed.

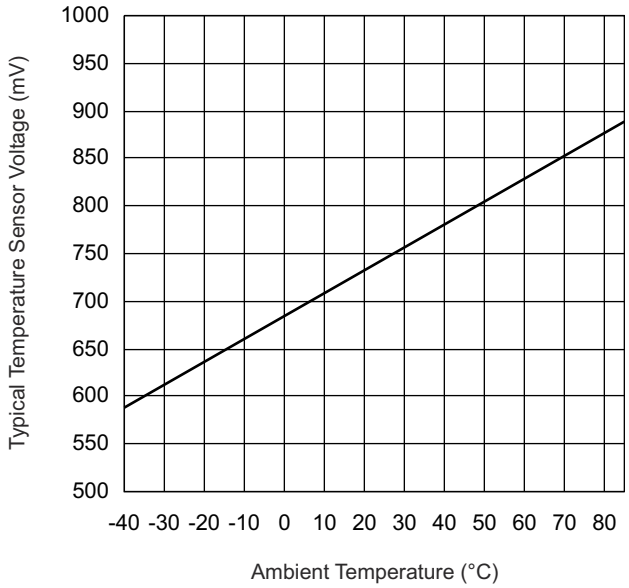

図 8-16. Typical Temperature Sensor Voltage

Copyright © 2021 Texas Instruments Incorporated

8.43 REF, External Reference

over recommended ranges of supply voltage and operating free-air temperature (unless otherwise noted)[1]

PARAMETER		TEST CONDITIONS	V_{CC}	MIN	MAX	UNIT
V_{eREF+}	Positive external reference voltage input	$V_{eREF+} > V_{REF-}/V_{eREF-}$ [2]		1.4	AV_{CC}	V
V_{REF-}/V_{eREF-}	Negative external reference voltage input	$V_{eREF+} > V_{REF-}/V_{eREF-}$ [3]		0	1.2	V
$V_{eREF+} – V_{REF-}/V_{eREF-}$	Differential external reference voltage input	$V_{eREF+} > V_{REF-}/V_{eREF-}$ [4]		1.4	AV_{CC}	V
I_{VeREF+}, $I_{VREF-/VeREF-}$	Static input current	1.4 V ≤ V_{eREF+} ≤ V_{AVCC} , V_{eREF-} = 0 V, $f_{ADC12CLK}$ = 5 MHz, ADC12SHTx = 1h, Conversion rate 200 ksps	2.2 V, 3 V	–26	26	µA
		1.4 V ≤ V_{eREF+} ≤ V_{AVCC} , V_{eREF-} = 0 V, $f_{ADC12CLK}$ = 5 MHz, ADC12SHTx = 8h, Conversion rate 20 ksps	2.2 V, 3 V	–1.2	+1.2	
$C_{VREF+/-}$	Capacitance at VREF+ or VREF- terminal[5]			10		µF

(1) The external reference is used during ADC conversion to charge and discharge the capacitance array. The input capacitance, C_i, is also the dynamic load for an external reference during conversion. The dynamic impedance of the reference supply should follow the recommendations on analog-source impedance to let the charge settle for 12-bit accuracy.
(2) The accuracy limits the minimum positive external reference voltage. Lower reference voltage levels may be applied with reduced accuracy requirements.
(3) The accuracy limits the maximum negative external reference voltage. Higher reference voltage levels may be applied with reduced accuracy requirements.
(4) The accuracy limits minimum external differential reference voltage. Lower differential reference voltage levels may be applied with reduced accuracy requirements.
(5) Connect two decoupling capacitors, 10 µF and 100 nF, to VREF to decouple the dynamic current required for an external reference source if it is used for the ADC12_A. Also see the MSP430F5xx and MSP430F6xx Family User's Guide.

8.44 REF, Built-In Reference

over recommended ranges of supply voltage and operating free-air temperature (unless otherwise noted)[1]

PARAMETER		TEST CONDITIONS		V_{CC}	MIN	TYP	MAX	UNIT
V_{REF+}	Positive built-in reference voltage output	REFVSEL = {2} for 2.5 V, REFON = REFOUT = 1 , I_{VREF+} = 0 A		3 V		2.5	±1%	V
		REFVSEL = {1} for 2 V, REFON = REFOUT = 1, I_{VREF+} = 0 A		3 V		2.0	±1%	
		REFVSEL = {0} for 1.5 V, REFON = REFOUT = 1, I_{VREF+} = 0 A		2.2 V, 3 V		1.5	±1%	
$AV_{CC(min)}$	AVCC minimum voltage, Positive built-in reference active	REFVSEL = {0} for 1.5 V			2.2			V
		REFVSEL = {1} for 2 V			2.3			
		REFVSEL = {2} for 2.5 V			2.8			
I_{REF+}	Operating supply current into AVCC terminal [2] [7]	ADC12SR = 1[8], REFON = 1, REFOUT = 0, REFBURST = 0		3 V		70	100	µA
		ADC12SR = 1[8], REFON = 1, REFOUT = 1, REFBURST = 0				0.45	0.75	mA
		ADC12SR = 0[8], REFON = 1, REFOUT = 0, REFBURST = 0				210	310	µA
		ADC12SR = 0[8], REFON = 1, REFOUT = 1, REFBURST = 0				0.95	1.7	mA
$I_{L(VREF+)}$	Load-current regulation, VREF+ terminal[3]	REFVSEL = {0, 1, 2}, I_{VREF+} = +10 µA , –1000 µA, AV_{CC} = $AV_{CC(min)}$ for each reference level, REFVSEL = {0, 1, 2}, REFON = REFOUT = 1				1500	2500	µV/mA
C_{VREF+}	Capacitance at VREF+ terminal	REFON = REFOUT = 1[6], 0 mA ≤ I_{VREF+} ≤ I_{VREF+}(max)		2.2 V, 3 V	20		100	pF
TC_{REF+}	Temperature coefficient of built-in reference[4]	I_{VREF+} is a constant in the range of 0 mA ≤ I_{VREF+} ≤ –1 mA	REFOUT = 0	2.2 V, 3 V		20		ppm/°C
TC_{REF+}	Temperature coefficient of built-in reference[4]	I_{VREF+} is a constant in the range of 0 mA ≤ I_{VREF+} ≤ –1 mA	REFOUT = 1	2.2 V, 3 V		20	50	ppm/°C
PSRR_DC	Power supply rejection ratio (DC)	AV_{CC} = AV_{CC}(min) to AV_{CC}(max), T_A = 25°C, REFVSEL = {0, 1, 2}, REFON = 1, REFOUT = 0 or 1				120	300	µV/V
PSRR_AC	Power supply rejection ratio (AC)	AV_{CC} = AV_{CC}(min) to AV_{CC}(max), T_A = 25°C, REFVSEL = {0, 1, 2}, REFON = 1, REFOUT = 0 or 1				1		mV/V
t_{SETTLE}	Settling time of reference voltage[5]	AV_{CC} = AV_{CC}(min) to AV_{CC}(max), REFVSEL = {0, 1, 2}, REFOUT = 0, REFON = 0 → 1				75		µs
		AV_{CC} = AV_{CC}(min) to AV_{CC}(max), C_{VREF} = C_{VREF}(max), REFVSEL = {0, 1, 2}, REFOUT = 1, REFON = 0 → 1				75		

(1) The reference is supplied to the ADC by the REF module and is buffered locally inside the ADC. The ADC uses two internal buffers, one smaller and one larger for driving the V_{REF+} terminal. When REFOUT = 1, the reference is available at the V_{REF+} terminal, as well as, used as the reference for the conversion and uses the larger buffer. When REFOUT = 0, the reference is only used as the reference for the conversion and uses the smaller buffer.
(2) The internal reference current is supplied by the AVCC terminal. Consumption is independent of the ADC12ON control bit, unless a conversion is active. REFOUT = 0 represents the current contribution of the smaller buffer. REFOUT = 1 represents the current contribution of the larger buffer without external load.
(3) Contribution only due to the reference and buffer including package. This does not include resistance due to PCB traces or other external factors.
(4) Calculated using the box method: (MAX(–40°C to +85°C) – MIN(–40°C to +85°C)) / MIN(–40°C to +85°C)/(85°C – (–40°C)).
(5) The condition is that the error in a conversion started after t_{REFON} is less than ±0.5 LSB. The settling time depends on the external capacitive load when REFOUT = 1.
(6) Connect two decoupling capacitors, 10 µF and 100 nF, to VREF to decouple the dynamic current required for an external reference source if it is used for the ADC12_A. Also see the MSP430F5xx and MSP430F6xx Family User's Guide.

Copyright © 2021 Texas Instruments Incorporated

(7) The temperature sensor is provided by the REF module. Its current is supplied by terminal AVCC and is equivalent to I_{REF+} with REFON = 1 and REFOUT = 0.
(8) For devices without the ADC12, the parametric with ADC12SR = 0 are applicable.

8.45 12-Bit DAC, Supply Specifications

over recommended ranges of supply voltage and operating free-air temperature (unless otherwise noted)

PARAMETER		TEST CONDITIONS	V_{CC}	MIN	TYP	MAX	UNIT
AV_{CC}	Analog supply voltage	$AV_{CC} = DV_{CC}$, $AV_{SS} = DV_{SS} = 0$ V		2.20		3.60	V
I_{DD}	Supply current, single DAC channel(1) (2)	DAC12AMPx = 2, DAC12IR = 0, DAC12OG = 1, DAC12_xDAT = 0800h, VeREF+ = VREF+ = 1.5 V	3 V		65	110	µA
		DAC12AMPx = 2, DAC12IR = 1, DAC12_xDAT = 0800h, VeREF+ = VREF+ = AV_{CC}	2.2 V, 3 V		125	165	
		DAC12AMPx = 5, DAC12IR = 1, DAC12_xDAT = 0800h, VeREF+ = VREF+ = AV_{CC}			250	350	
		DAC12AMPx = 7, DAC12IR = 1, DAC12_xDAT = 0800h, VeREF+ = VREF+ = AV_{CC}			750	1100	
PSRR	Power supply rejection ratio(3) (4)	DAC12_xDAT = 800h, VeREF+ = 1.5 V, ΔAV_{CC} = 100 mV	2.2 V		70		dB
		DAC12_xDAT = 800h, VeREF+ = 1.5 V or 2.5 V, ΔAV_{CC} = 100 mV	3 V		70		

(1) No load at the output pin, DAC12_0 or DAC12_1, assuming that the control bits for the shared pins are set properly.
(2) Current into reference terminals not included. If DAC12IR = 1 current flows through the input divider; see Reference Input specifications.
(3) PSRR = 20 log (ΔAV_{CC} / ΔV_{DAC12_xOUT})
(4) The internal reference is not used.

8.46 12-Bit DAC, Linearity Specifications

over recommended ranges of supply voltage and operating free-air temperature (unless otherwise noted) (see 図 8-17)

PARAMETER		TEST CONDITIONS		V_{CC}	MIN	TYP	MAX	UNIT
	Resolution	12-bit monotonic			12			bits
INL	Integral nonlinearity(2)	VeREF+ = 1.5 V, DAC12AMPx = 7, DAC12IR = 1		2.2 V		±2	±4(1)	LSB
		VeREF+ = 2.5 V, DAC12AMPx = 7, DAC12IR = 1		3 V		±2	±4	
DNL	Differential nonlinearity(2)	VeREF+ = 1.5 V, DAC12AMPx = 7, DAC12IR = 1		2.2 V		±0.4	±1(1)	LSB
		VeREF+ = 2.5 V, DAC12AMPx = 7, DAC12IR = 1		3 V		±0.4	±1	
E_O	Offset voltage	Without calibration(2) (3)	VeREF+ = 1.5 V, DAC12AMPx = 7, DAC12IR = 1	2.2 V			±21(1)	mV
			VeREF+ = 2.5 V, DAC12AMPx = 7, DAC12IR = 1	3 V			±21	
		With calibration(2) (3)	VeREF+ = 1.5 V, DAC12AMPx = 7, DAC12IR = 1	2.2 V			±1.5(1)	
			VeREF+ = 2.5 V, DAC12AMPx = 7, DAC12IR = 1	3 V			±1.5	
$d_{E(O)}/d_T$	Offset error temperature coefficient(2)	With calibration		2.2 V, 3 V		±10		µV/°C
E_G	Gain error	VeREF+ = 1.5 V		2.2 V			±2.5	%FSR
		VeREF+ = 2.5 V		3 V			±2.5	
$d_{E(G)}/d_T$	Gain temperature coefficient(2)			2.2 V, 3 V		10		ppm of FSR/ °C
t_{Offset_Cal}	Time for offset calibration(4)	DAC12AMPx = 2		2.2 V, 3 V			165	ms
		DAC12AMPx = 3, 5					66	
		DAC12AMPx = 4, 6, 7					16.5	

(1) This parameter is not production tested.
(2) Parameters calculated from the best-fit curve from 0x0F to 0xFFF. The best-fit curve method is used to deliver coefficients "a" and "b" of the first-order equation: y = a + bx. $V_{DAC12_xOUT} = E_O + (1 + E_G) \times (VeREF+ / 4095) \times DAC12_xDAT$, DAC12IR = 1.
(3) The offset calibration works on the output operational amplifier. Offset calibration is triggered by setting the DAC12CALON bit.
(4) The offset calibration can be done if DAC12AMPx = {2, 3, 4, 5, 6, 7}. The output operational amplifier is switched off with DAC12AMPx = {0, 1}. TI recommends configuring the DAC12 module before initiating calibration. Port activity during calibration may effect accuracy and is not recommended.

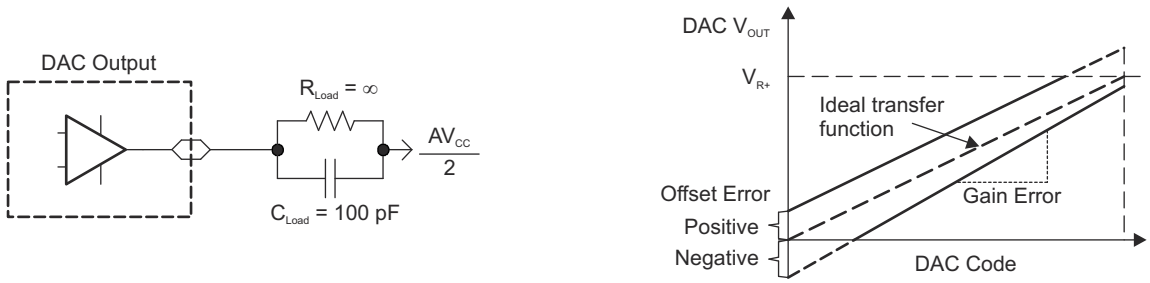

図 8-17. Linearity Test Load Conditions and Gain and Offset Definitions

Copyright © 2021 Texas Instruments Incorporated

8.47 12-Bit DAC, Output Specifications

over recommended ranges of supply voltage and operating free-air temperature (unless otherwise noted)

PARAMETER		TEST CONDITIONS	V_{CC}	MIN	TYP	MAX	UNIT
V_O	Output voltage range[(1)] (see 図 8-18)	No load, VeREF+ = AV_{CC}, DAC12_xDAT = 0h, DAC12IR = 1, DAC12AMPx = 7	2.2 V, 3 V	0		0.005	V
		No load, VeREF+ = AV_{CC}, DAC12_xDAT = 0FFFh, DAC12IR = 1, DAC12AMPx = 7		AV_{CC} – 0.05		AV_{CC}	
		R_{Load} = 3 kΩ, VeREF+ = AV_{CC}, DAC12_xDAT = 0h, DAC12IR = 1, DAC12AMPx = 7		0		0.1	
		R_{Load} = 3 kΩ, VeREF+ = AV_{CC}, DAC12_xDAT = 0FFFh, DAC12IR = 1, DAC12AMPx = 7		AV_{CC} – 0.13		AV_{CC}	
$C_{L(DAC12)}$	Maximum DAC12 load capacitance		2.2 V, 3 V			100	pF
$I_{L(DAC12)}$	Maximum DAC12 load current	DAC12AMPx = 2, DAC12_xDAT = 0FFFh, $V_{O/P(DAC12)}$ > AV_{CC} – 0.3	2.2 V, 3 V	–1			mA
		DAC12AMPx = 2, DAC12_xDAT = 0h, $V_{O/P(DAC12)}$ < 0.3 V				1	
$R_{O/P(DAC12)}$	Output resistance (see 図 8-18)	R_{Load} = 3 kΩ, $V_{O/P(DAC12)}$ < 0.3 V, DAC12AMPx = 2, DAC12_xDAT = 0h	2.2 V, 3 V		150	250	Ω
		R_{Load} = 3 kΩ, $V_{O/P(DAC12)}$ > AV_{CC} – 0.3 V, DAC12_xDAT = 0FFFh			150	250	
		R_{Load} = 3 kΩ, 0.3 V ≤ $V_{O/P(DAC12)}$ ≤ AV_{CC} – 0.3 V				6	

(1) Data is valid after the offset calibration of the output amplifier.

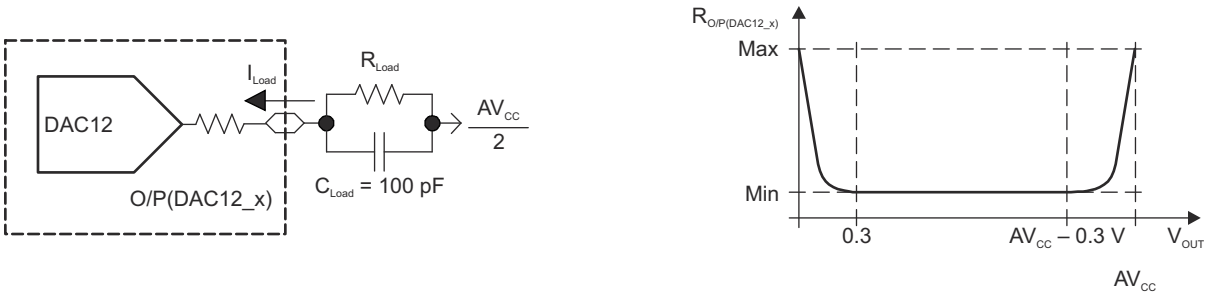

図 8-18. DAC12_x Output Resistance Tests

8.48 12-Bit DAC, Reference Input Specifications

over recommended ranges of supply voltage and operating free-air temperature (unless otherwise noted)

PARAMETER		TEST CONDITIONS	V_{CC}	MIN	TYP	MAX	UNIT
VeREF+	Reference input voltage range	DAC12IR = 0[(1) (2)]	2.2 V, 3 V		AV_{CC} / 3	AV_{CC} + 0.2	V
		DAC12IR = 1[(3) (4)]			AV_{CC}	AV_{CC} + 0.2	
$Ri_{(VREF+)}$, $Ri_{(VeREF+)}$	Reference input resistance	DAC12_0 IR = DAC12_1 IR = 0	2.2 V, 3 V	20			MΩ
		DAC12_0 IR = 1, DAC12_1 IR = 0			48		kΩ
		DAC12_0 IR = 0, DAC12_1 IR = 1			48		
		DAC12_0 IR = DAC12_1 IR = 1, DAC12_0 SREFx = DAC12_1 SREFx[(5)]			24		

(1) For a full-scale output, the reference input voltage can be as high as 1/3 of the maximum output voltage swing (AVCC).
(2) The maximum voltage applied at reference input voltage terminal VeREF+ = $(AV_{CC} – V_{E(O)}) / (3 × (1 + E_G))$.
(3) For a full-scale output, the reference input voltage can be as high as the maximum output voltage swing (AVCC).
(4) The maximum voltage applied at reference input voltage terminal VeREF+ = $(AV_{CC} – V_{E(O)}) / (1 + E_G)$.
(5) When DAC12IR = 1 and DAC12SREFx = 0 or 1 for both channels, the reference input resistive dividers for each DAC are in parallel reducing the reference input resistance.

8.49 12-Bit DAC, Dynamic Specifications

$V_{REF} = V_{CC}$, DAC12IR = 1 (see 図 8-19 and 図 8-20), over recommended ranges of supply voltage and operating free-air temperature (unless otherwise noted)

PARAMETER		TEST CONDITIONS		V_{CC}	MIN	TYP	MAX	UNIT
t_{ON}	DAC12 on time	DAC12_xDAT = 800h, $Error_{V(O)}$ < ±0.5 LSB[(1)] (see 図 8-19)	DAC12AMPx = 0 → {2, 3, 4}	2.2 V, 3 V		60	120	µs
			DAC12AMPx = 0 → {5, 6}			15	30	
			DAC12AMPx = 0 → 7			6	12	
$t_{S(FS)}$	Settling time, full scale	DAC12_xDAT = 80h → F7Fh → 80h	DAC12AMPx = 2	2.2 V, 3 V		100	200	µs
			DAC12AMPx = 3, 5			40	80	
			DAC12AMPx = 4, 6, 7			15	30	
$t_{S(C-C)}$	Settling time, code to code	DAC12_xDAT = 3F8h → 408h → 3F8h, BF8h → C08h → BF8h	DAC12AMPx = 2	2.2 V, 3 V		5		µs
			DAC12AMPx = 3, 5			2		
			DAC12AMPx = 4, 6, 7			1		
SR	Slew rate	DAC12_xDAT = 80h → F7Fh → 80h[(2)]	DAC12AMPx = 2	2.2 V, 3 V	0.05	0.35		V/µs
			DAC12AMPx = 3, 5		0.35	1.10		
			DAC12AMPx = 4, 6, 7		1.50	5.20		
	Glitch energy	DAC12_xDAT = 800h → 7FFh → 800h	DAC12AMPx = 7	2.2 V, 3 V		35		nV-s

(1) R_{Load} and C_{Load} connected to AV_{SS} (not $AV_{CC}/2$) in 図 8-19.
(2) Slew rate applies to output voltage steps ≥ 200 mV.

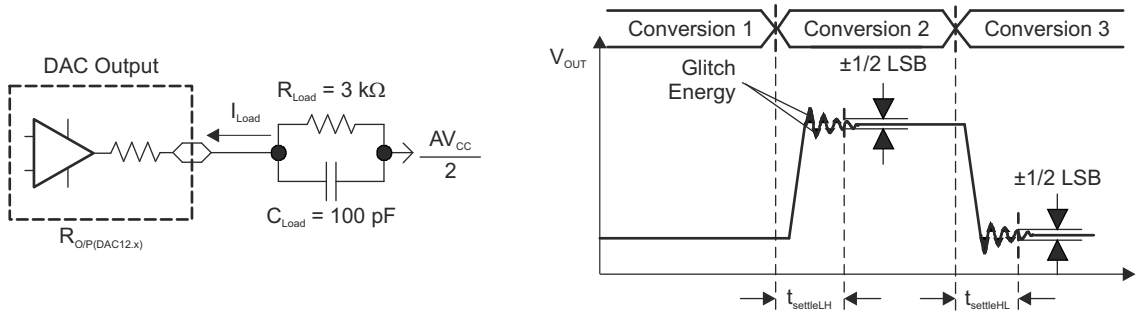

図 8-19. Settling Time and Glitch Energy Testing

Copyright © 2021 Texas Instruments Incorporated

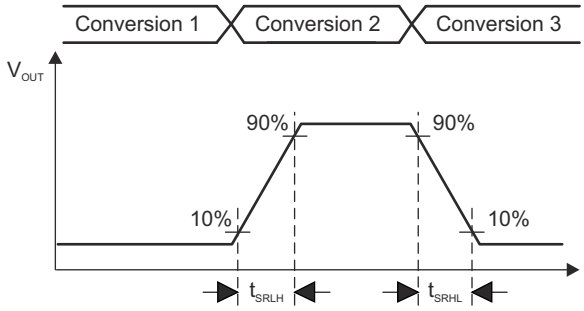

図 8-20. Slew Rate Testing

8.50 12-Bit DAC, Dynamic Specifications (Continued)

over recommended ranges of supply voltage and T_A = 25°C (unless otherwise noted)

PARAMETER		TEST CONDITIONS	V_{CC}	MIN	TYP	MAX	UNIT
BW_{-3dB}	3-dB bandwidth, V_{DC} = 1.5 V, V_{AC} = 0.1 V_{PP} (see 図 8-21)	DAC12AMPx = {2, 3, 4}, DAC12SREFx = 2, DAC12IR = 1, DAC12_xDAT = 800h	2.2 V, 3 V	40			kHz
		DAC12AMPx = {5, 6}, DAC12SREFx = 2, DAC12IR = 1, DAC12_xDAT = 800h		180			
		DAC12AMPx = 7, DAC12SREFx = 2, DAC12IR = 1, DAC12_xDAT = 800h		550			
	Channel-to-channel crosstalk(1) (see 図 8-22)	DAC12_0DAT = 800h, No load, DAC12_1DAT = 80h ↔ F7Fh, R_{Load} = 3 kΩ, f_{DAC12_1OUT} = 10 kHz at 50/50 duty cycle	2.2 V, 3 V		–80		dB
		DAC12_0DAT = 80h ↔ F7Fh, R_{Load} = 3 kΩ, DAC12_1DAT = 800h, No load, f_{DAC12_0OUT} = 10 kHz at 50/50 duty cycle			–80		

(1) R_{Load} = 3 kΩ, C_{Load} = 100 pF

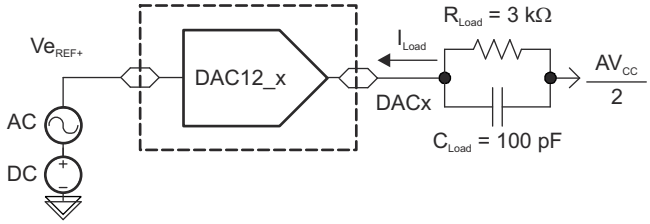

図 8-21. Test Conditions for 3-dB Bandwidth Specification

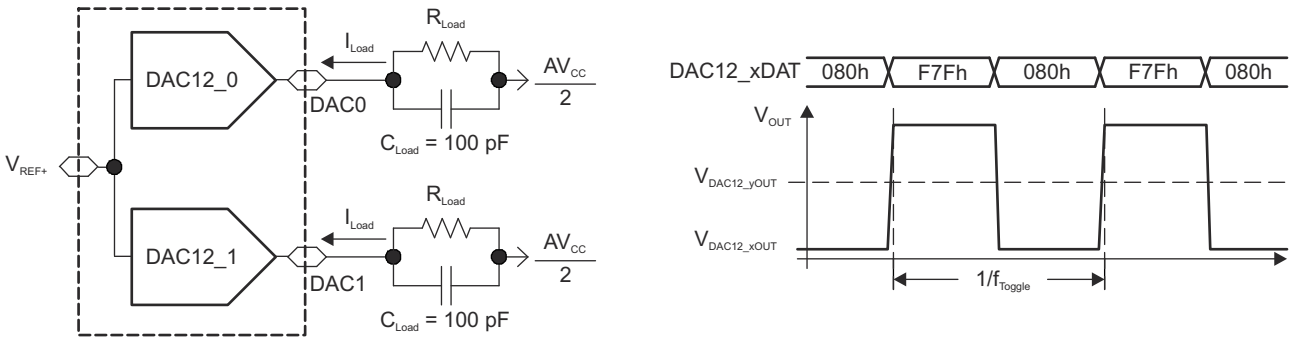

図 8-22. Crosstalk Test Conditions

8.51 Comparator_B

over recommended ranges of supply voltage and operating free-air temperature (unless otherwise noted)

PARAMETER		TEST CONDITIONS	V_{CC}	MIN	TYP	MAX	UNIT
V_{CC}	Supply voltage			1.8		3.6	V
I_{AVCC_COMP}	Comparator operating supply current into AVCC terminal, excludes reference resistor ladder	CBPWRMD = 00	1.8 V			40	µA
			2.2 V		30	50	
			3 V		40	65	
		CBPWRMD = 01	2.2 V, 3 V		10	30	
		CBPWRMD = 10	2.2 V, 3 V		0.1	0.5	
I_{AVCC_REF}	Quiescent current of local reference voltage amplifier into AVCC terminal	CBREFACC = 1, CBREFLx = 01				22	µA
V_{IC}	Common-mode input range			0		V_{CC} – 1	V
V_{OFFSET}	Input offset voltage	CBPWRMD = 00				±20	mV
		CBPWRMD = 01, 10				±10	
C_{IN}	Input capacitance				5		pF
R_{SIN}	Series input resistance	On (switch closed)			3	4	kΩ
		Off (switch open)		50			MΩ
t_{PD}	Propagation delay, response time	CBPWRMD = 00, CBF = 0				450	ns
		CBPWRMD = 01, CBF = 0				600	
		CBPWRMD = 10, CBF = 0				50	µs
$t_{PD,filter}$	Propagation delay with filter active	CBPWRMD = 00, CBON = 1, CBF = 1, CBFDLY = 00		0.35	0.6	1.0	µs
		CBPWRMD = 00, CBON = 1, CBF = 1, CBFDLY = 01		0.6	1.0	1.8	
		CBPWRMD = 00, CBON = 1, CBF = 1, CBFDLY = 10		1.0	1.8	3.4	
		CBPWRMD = 00, CBON = 1, CBF = 1, CBFDLY = 11		1.8	3.4	6.5	
t_{EN_CMP}	Comparator enable time, settling time	CBON = 0 to CBON = 1, CBPWRMD = 00, 01			1	2	µs
		CBON = 0 to CBON = 1, CBPWRMD = 10				100	
t_{EN_REF}	Resistor reference enable time	CBON = 0 to CBON = 1			0.3	1.5	µs
V_{CB_REF}	Reference voltage for a given tap	VIN = reference into resistor ladder, n = 0 to 31		VIN × (n + 0.5) / 32	VIN × (n + 1) / 32	VIN × (n + 1.5) / 32	V

Copyright © 2021 Texas Instruments Incorporated

8.52 Ports PU.0 and PU.1

over recommended ranges of supply voltage and operating free-air temperature (unless otherwise noted)

PARAMETER		TEST CONDITIONS	MIN	MAX	UNIT
V_{OH}	High-level output voltage	V_{LDOO} = 3.3 V ±10%, I_{OH} = –25 mA, See 図 8-24 for typical characteristics	2.4		V
V_{OL}	Low-level output voltage	V_{LDOO} = 3.3 V ±10%, I_{OL} = 25 mA, See 図 8-23 for typical characteristics		0.4	V
V_{IH}	High-level input voltage	V_{LDOO} = 3.3 V ±10%, See 図 8-25 for typical characteristics	2.0		V
V_{IL}	Low-level input voltage	V_{LDOO} = 3.3 V ±10%, See 図 8-25 for typical characteristics		0.8	V

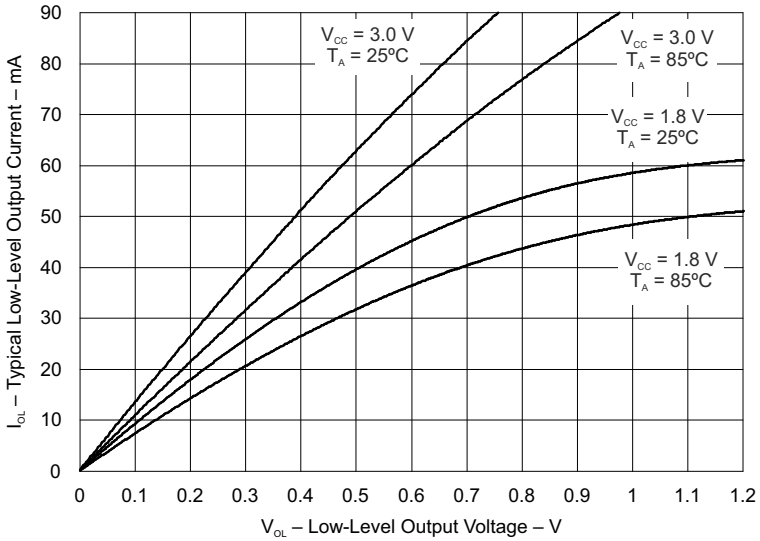

図 8-23. Ports PU.0, PU.1 Typical Low-Level Output Characteristics

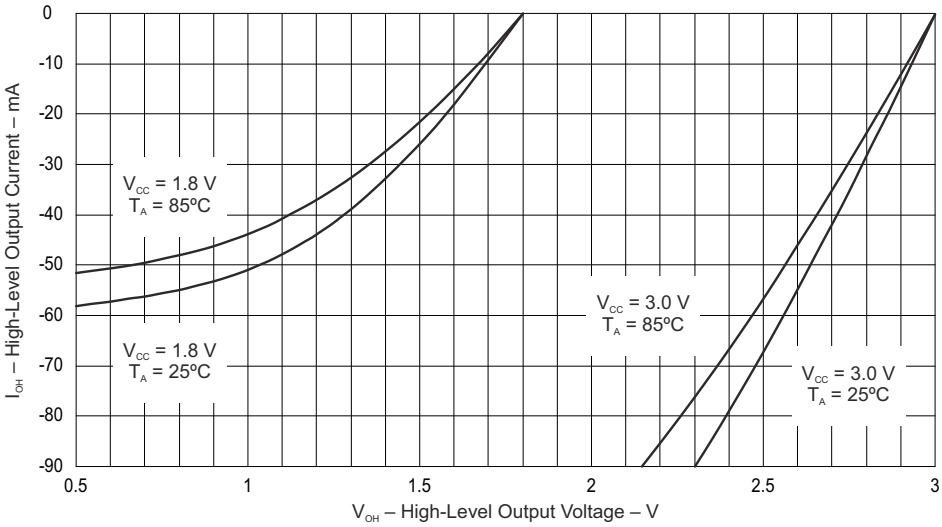

図 8-24. Ports PU.0, PU.1 Typical High-Level Output Characteristics

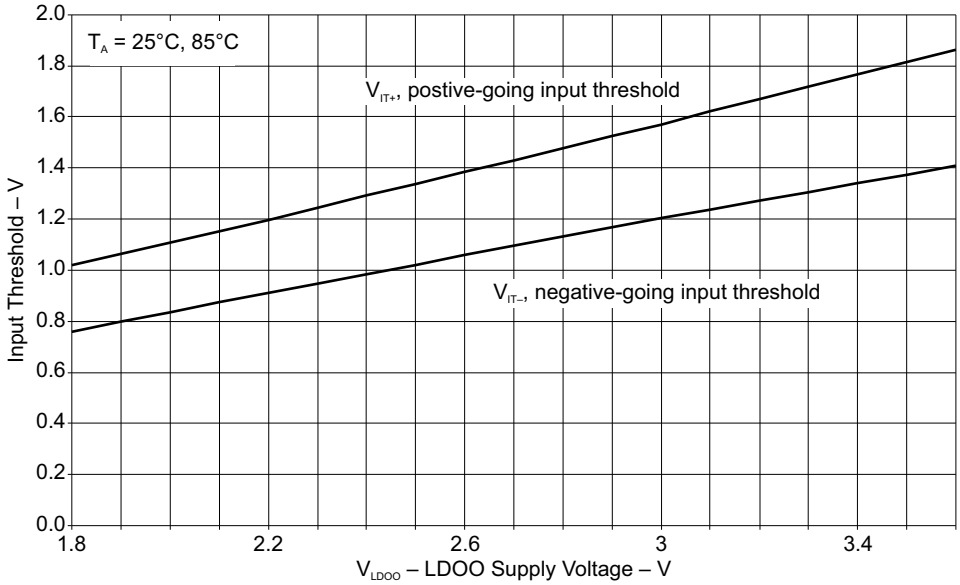

図 8-25. Ports PU.0, PU.1 Typical Input Threshold Characteristics

8.53 LDO-PWR (LDO Power System)

over recommended ranges of supply voltage and operating free-air temperature (unless otherwise noted)

PARAMETER		TEST CONDITIONS	MIN	TYP	MAX	UNIT
V_{LAUNCH}	LDO input detection threshold				3.75	V
V_{LDOI}	LDO input voltage	Normal operation	3.76		5.5	V
V_{LDO}	LDO output voltage			3.3	±9%	V
V_{LDO_EXT}	LDOO terminal input voltage with LDO disabled	LDO disabled	1.8		3.6	V
I_{LDOO}	Maximum external current from LDOO terminal	LDO is on			20	mA
I_{DET}	LDO current overload detection(1)		60		100	mA
C_{LDOI}	LDOI terminal recommended capacitance			4.7		µF
C_{LDOO}	LDOO terminal recommended capacitance			220		nF
t_{ENABLE}	Settling time V_{LDO}	Within 2%, recommended capacitances			2	ms

(1) A current overload is detected when the total current supplied from the LDO exceeds this value.

Copyright © 2021 Texas Instruments Incorporated

8.54 Flash Memory

over recommended ranges of supply voltage and operating free-air temperature (unless otherwise noted)

PARAMETER		T_J	MIN	TYP	MAX	UNIT
$DV_{CC(PGM/ERASE)}$	Program and erase supply voltage		1.8		3.6	V
I_{PGM}	Average supply current from DVCC during program			3	5	mA
I_{ERASE}	Average supply current from DVCC during erase			6	15	mA
I_{MERASE}, I_{BANK}	Average supply current from DVCC during mass erase or bank erase			6	15	mA
t_{CPT}	Cumulative program time(1)				16	ms
	Program and erase endurance		10^4	10^5		cycles
$t_{Retention}$	Data retention duration	25°C	100			years
t_{Word}	Word or byte program time(2)		64		85	µs
$t_{Block, 0}$	Block program time for first byte or word(2)		49		65	µs
$t_{Block, 1–(N–1)}$	Block program time for each additional byte or word, except for last byte or word(2)		37		49	µs
$t_{Block, N}$	Block program time for last byte or word(2)		55		73	µs
$t_{Seg\ Erase}$	Erase time for segment, mass erase, and bank erase when available(2)		23		32	ms
$f_{MCLK,MGR}$	MCLK frequency in marginal read mode (FCTL4.MGR0 = 1 or FCTL4.MGR1 = 1)		0		1	MHz

(1) The cumulative program time must not be exceeded when writing to a 128-byte flash block. This parameter applies to all programming methods: individual word or byte write and block write modes.
(2) These values are hardwired into the state machine of the flash controller.

8.55 JTAG and Spy-Bi-Wire Interface

over recommended ranges of supply voltage and operating free-air temperature (unless otherwise noted)

PARAMETER		TEST CONDITIONS	MIN	TYP	MAX	UNIT
f_{SBW}	Spy-Bi-Wire input frequency	2.2 V, 3 V	0		20	MHz
$t_{SBW,Low}$	Spy-Bi-Wire low clock pulse duration	2.2 V, 3 V	0.025		15	µs
$t_{SBW, En}$	Spy-Bi-Wire enable time (TEST high to acceptance of first clock edge)(1)	2.2 V, 3 V			1	µs
$t_{SBW,Rst}$	Spy-Bi-Wire return to normal operation time		15		100	µs
f_{TCK}	TCK input frequency (4-wire JTAG)(2)	2.2 V	0		5	MHz
		3 V	0		10	MHz
$R_{internal}$	Internal pulldown resistance on TEST	2.2 V, 3 V	45	60	80	kΩ

(1) Tools that access the Spy-Bi-Wire interface must wait for the $t_{SBW,En}$ time after pulling the TEST/SBWTCK pin high before applying the first SBWTCK clock edge.
(2) f_{TCK} may be restricted to meet the timing requirements of the module selected.

9 Detailed Description

9.1 Overview

The MSP430F643x devices include an integrated 3.3-V LDO, a high-performance 12-bit ADC, a comparator, two USCIs, a hardware multiplier, DMA, four 16-bit timers, an RTC module with alarm capabilities, an LCD driver, and up to 74 I/O pins.

9.2 CPU

The MSP430 CPU has a 16-bit RISC architecture that is highly transparent to the application. All operations, other than program-flow instructions, are performed as register operations in conjunction with seven addressing modes for source operand and four addressing modes for destination operand.

The CPU is integrated with 16 registers that provide reduced instruction execution time. The register-to-register operation execution time is one cycle of the CPU clock.

Four of the registers, R0 to R3, are dedicated as program counter, stack pointer, status register, and constant generator, respectively. The remaining registers are general-purpose registers (see 図 9-1).

Peripherals are connected to the CPU using data, address, and control buses. Peripherals can be managed with all instructions.

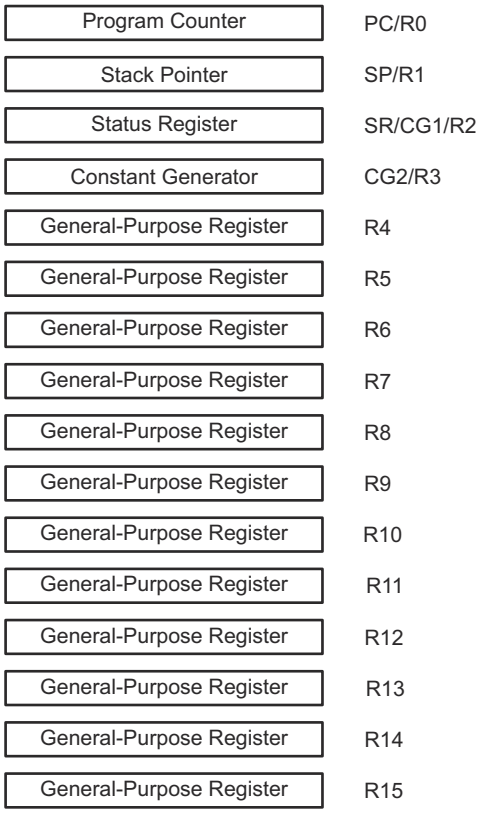

図 9-1. Integrated CPU Registers

Copyright © 2021 Texas Instruments Incorporated

9.3 Instruction Set

The instruction set consists of the original 51 instructions with three formats and seven address modes and additional instructions for the expanded address range. Each instruction can operate on word and byte data. 表 9-1 lists examples of the three types of instruction formats; 表 9-2 lists the address modes.

表 9-1. Instruction Word Formats

INSTRUCTION WORD FORMAT	EXAMPLE	OPERATION
Dual operands, source-destination	ADD R4,R5	R4 + R5 → R5
Single operands, destination only	CALL R8	PC → (TOS), R8 → PC
Relative jump, un/conditional	JNE	Jump-on-equal bit = 0

表 9-2. Address Mode Descriptions

ADDRESS MODE	S(1)	D(1)	SYNTAX	EXAMPLE	OPERATION
Register	+	+	MOV Rs,Rd	MOV R10,R11	R10 → R11
Indexed	+	+	MOV X(Rn),Y(Rm)	MOV 2(R5),6(R6)	M(2+R5) → M(6+R6)
Symbolic (PC relative)	+	+	MOV EDE,TONI		M(EDE) → M(TONI)
Absolute	+	+	MOV &MEM, &TCDAT		M(MEM) → M(TCDAT)
Indirect	+		MOV @Rn,Y(Rm)	MOV @R10,Tab(R6)	M(R10) → M(Tab+R6)
Indirect auto-increment	+		MOV @Rn+,Rm	MOV @R10+,R11	M(R10) → R11 R10 + 2 → R10
Immediate	+		MOV #X,TONI	MOV #45,TONI	#45 → M(TONI)

(1) S = source, D = destination

9.4 Operating Modes

These devices have one active mode and seven software-selectable low-power modes of operation. An interrupt event can wake up the device from any of the low-power modes, service the request, and restore back to the low-power mode on return from the interrupt program.

Software can configure the following operating modes:

- Active mode (AM)
  - All clocks are active
- Low-power mode 0 (LPM0)
  - CPU is disabled
  - ACLK and SMCLK remain active, MCLK is disabled
  - FLL loop control remains active
- Low-power mode 1 (LPM1)
  - CPU is disabled
  - FLL loop control is disabled
  - ACLK and SMCLK remain active, MCLK is disabled
- Low-power mode 2 (LPM2)
  - CPU is disabled
  - MCLK, FLL loop control, and DCOCLK are disabled
  - DC generator of the DCO remains enabled
  - ACLK remains active
- Low-power mode 3 (LPM3)
  - CPU is disabled
  - MCLK, FLL loop control, and DCOCLK are disabled
  - DC generator of the DCO is disabled
  - ACLK remains active
- Low-power mode 4 (LPM4)
  - CPU is disabled
  - ACLK is disabled
  - MCLK, FLL loop control, and DCOCLK are disabled
  - DC generator of the DCO is disabled
  - Crystal oscillator is stopped
  - Complete data retention
- Low-power mode 3.5 (LPM3.5)
  - Internal regulator disabled
  - No data retention
  - RTC enabled and clocked by low-frequency oscillator
  - Wake-up signal from $\overline{\text{RST}}$/NMI, RTC_B, P1, P2, P3, and P4
- Low-power mode 4.5 (LPM4.5)
  - Internal regulator disabled
  - No data retention
  - Wake-up signal from $\overline{\text{RST}}$/NMI, P1, P2, P3, and P4

Copyright © 2021 Texas Instruments Incorporated

9.5 Interrupt Vector Addresses

The interrupt vectors and the power-up start address are in the address range 0FFFFh to 0FF80h (see 表 9-3). The vector contains the 16-bit address of the appropriate interrupt-handler instruction sequence.

表 9-3. Interrupt Sources, Flags, and Vectors of MSP430F643x Configurations

INTERRUPT SOURCE	INTERRUPT FLAG	SYSTEM INTERRUPT	WORD ADDRESS	PRIORITY
System Reset Power-Up, External Reset Watchdog Time-out, Key Violation Flash Memory Key Violation	WDTIFG, KEYV (SYSRSTIV)(1) (3)	Reset	0FFFEh	63, highest
System NMI PMM Vacant Memory Access JTAG Mailbox	SVMLIFG, SVMHIFG, DLYLIFG, DLYHIFG, VLRLIFG, VLRHIFG, VMAIFG, JMBNIFG, JMBOUTIFG (SYSSNIV)(1)	(Non)maskable	0FFFCh	62
User NMI NMI Oscillator Fault Flash Memory Access Violation	NMIIFG, OFIFG, ACCVIFG, BUSIFG (SYSUNIV)(1) (3)	(Non)maskable	0FFFAh	61
Comp_B	Comparator B interrupt flags (CBIV)(1) (2)	Maskable	0FFF8h	60
Timer TB0	TB0CCR0 CCIFG0(2)	Maskable	0FFF6h	59
Timer TB0	TB0CCR1 CCIFG1 to TB0CCR6 CCIFG6, TB0IFG (TBIV)(1) (2)	Maskable	0FFF4h	58
Watchdog Interval Timer Mode	WDTIFG	Maskable	0FFF2h	57
USCI_A0 Receive or Transmit	UCA0RXIFG, UCA0TXIFG (UCA0IV)(1) (2)	Maskable	0FFF0h	56
USCI_B0 Receive or Transmit	UCB0RXIFG, UCB0TXIFG (UCB0IV)(1) (2)	Maskable	0FFEEh	55
ADC12_A	ADC12IFG0 to ADC12IFG15 (ADC12IV)(1) (2)	Maskable	0FFECh	54
Timer TA0	TA0CCR0 CCIFG0(2)	Maskable	0FFEAh	53
Timer TA0	TA0CCR1 CCIFG1 to TA0CCR4 CCIFG4, TA0IFG (TA0IV)(1) (2)	Maskable	0FFE8h	52
LDO-PWR	LDOOFFIG, LDOONIFG, LDOOVLIFG	Maskable	0FFE6h	51
DMA	DMA0IFG, DMA1IFG, DMA2IFG, DMA3IFG, DMA4IFG, DMA5IFG (DMAIV)(1) (2)	Maskable	0FFE4h	50
Timer TA1	TA1CCR0 CCIFG0(2)	Maskable	0FFE2h	49
Timer TA1	TA1CCR1 CCIFG1 to TA1CCR2 CCIFG2, TA1IFG (TA1IV)(1) (2)	Maskable	0FFE0h	48
I/O Port P1	P1IFG.0 to P1IFG.7 (P1IV)(1) (2)	Maskable	0FFDEh	47
USCI_A1 Receive or Transmit	UCA1RXIFG, UCA1TXIFG (UCA1IV)(1) (2)	Maskable	0FFDCh	46
USCI_B1 Receive or Transmit	UCB1RXIFG, UCB1TXIFG (UCB1IV)(1) (2)	Maskable	0FFDAh	45
I/O Port P2	P2IFG.0 to P2IFG.7 (P2IV)(1) (2)	Maskable	0FFD8h	44
LCD_B	LCD_B Interrupt Flags (LCDBIV)(1)	Maskable	0FFD6h	43
RTC_B	RTCRDYIFG, RTCTEVIFG, RTCAIFG, RT0PSIFG, RT1PSIFG, RTCOFIFG (RTCIV)(1) (2)	Maskable	0FFD4h	42
DAC12_A(5)	DAC12_0IFG, DAC12_1IFG(1) (2)	Maskable	0FFD2h	41
Timer TA2	TA2CCR0 CCIFG0(2)	Maskable	0FFD0h	40
Timer TA2	TA2CCR1 CCIFG1 to TA2CCR2 CCIFG2, TA2IFG (TA2IV)(1) (2)	Maskable	0FFCEh	39
I/O Port P3	P3IFG.0 to P3IFG.7 (P3IV)(1) (2)	Maskable	0FFCCh	38
I/O Port P4	P4IFG.0 to P4IFG.7 (P4IV)(1) (2)	Maskable	0FFCAh	37
Reserved	Reserved(4)		0FFC8h	36
			⋮	⋮
			0FF80h	0, lowest

(1) Multiple source flags
(2) Interrupt flags are in the module.
(3) A reset is generated if the CPU tries to fetch instructions from within peripheral space or vacant memory space. (Non)maskable: the individual interrupt-enable bit can disable an interrupt event, but the general-interrupt enable cannot disable it.
(4) Reserved interrupt vectors at addresses are not used in this device and can be used for regular program code if necessary. To maintain compatibility with other devices, TI recommends reserving these locations.

(5) Only on devices with peripheral module DAC12_A, otherwise reserved.

9.6 Memory

表 9-4 summarizes the memory map for all device variants.

表 9-4. Memory Organization

(1) (2)		MSP430F6433	MSP430F6436	MSP430F6438 MSP430F6435
Memory (flash) Main: interrupt vector	Total Size	128KB 00FFFFh to 00FF80h	128KB 00FFFFh to 00FF80h	256KB 00FFFFh to 00FF80h
Main: code memory	Bank 3	N/A	N/A	64KB 047FFF-038000h
	Bank 2	N/A	N/A	64KB 037FFF-028000h
	Bank 1	64KB 027FFF-018000h	64KB 027FFF-018000h	64KB 027FFF-018000h
	Bank 0	64KB 017FFF-008000h	64KB 017FFF-008000h	64KB 017FFF-008000h
RAM	Sector 3	N/A	4KB 0063FFh to 005400h	4KB 0063FFh to 005400h
	Sector 2	N/A	4KB 0053FFh to 004400h	4KB 0053FFh to 004400h
	Sector 1	4KB 0043FFh to 003400h	4KB 0043FFh to 003400h	4KB 0043FFh to 003400h
	Sector 0	4KB 0033FFh to 002400h	4KB 0033FFh to 002400h	4KB 0033FFh to 002400h
RAM	Sector 7	2KB 0023FFh to 001C00h	2KB 0023FFh to 001C00h	2KB 0023FFh to 001C00h
Information memory (flash)	Info A	128 bytes 0019FFh to 001980h	128 bytes 0019FFh to 001980h	128 bytes 0019FFh to 001980h
	Info B	128 bytes 00197Fh to 001900h	128 bytes 00197Fh to 001900h	128 bytes 00197Fh to 001900h
	Info C	128 bytes 0018FFh to 001880h	128 bytes 0018FFh to 001880h	128 bytes 0018FFh to 001880h
	Info D	128 bytes 00187Fh to 001800h	128 bytes 00187Fh to 001800h	128 bytes 00187Fh to 001800h
Bootloader (BSL) memory (flash)	BSL 3	512 bytes 0017FFh to 001600h	512 bytes 0017FFh to 001600h	512 bytes 0017FFh to 001600h
	BSL 2	512 bytes 0015FFh to 001400h	512 bytes 0015FFh to 001400h	512 bytes 0015FFh to 001400h
	BSL 1	512 bytes 0013FFh to 001200h	512 bytes 0013FFh to 001200h	512 bytes 0013FFh to 001200h
	BSL 0	512 bytes 0011FFh to 001000h	512 bytes 0011FFh to 001000h	512 bytes 0011FFh to 001000h
Peripherals	Size	4KB 000FFFh to 000000h	4KB 000FFFh to 000000h	4KB 000FFFh to 000000h

(1) N/A = Not available
(2) Backup RAM is accessed through the control registers BAKMEM0, BAKMEM1, BAKMEM2, and BAKMEM3.

9.7 Bootloader (BSL)

The BSL lets users program the flash memory or RAM using a UART serial interfaces. Access to the device memory by the BSL is protected by an user-defined password. Use of the BSL requires external access to six pins (see 表 9-5). BSL entry requires a specific entry sequence on the RST/NMI/SBWTDIO and TEST/SBWTCK pins. For complete description of the features of the BSL and its implementation, see MSP430™ Flash Devices Bootloader (BSL) User's Guide.

Copyright © 2021 Texas Instruments Incorporated

表 9-5. UART BSL Pin Requirements and Functions

DEVICE SIGNAL	BSL FUNCTION
$\overline{\text{RST}}$/NMI/SBWTDIO	Entry sequence signal
TEST/SBWTCK	Entry sequence signal
P1.1	Data transmit
P1.2	Data receive
VCC	Power supply
VSS	Ground supply

9.8 JTAG Operation

9.8.1 JTAG Standard Interface

The MSP430 family supports the standard JTAG interface which requires four signals for sending and receiving data. The JTAG signals are shared with general-purpose I/O. The TEST/SBWTCK pin is used to enable the JTAG signals. In addition to these signals, the $\overline{\text{RST}}$/NMI/SBWTDIO is required to interface with MSP430 development tools and device programmers. 表 9-6 lists the JTAG pin requirements. For further details on interfacing to development tools and device programmers, see the MSP430 Hardware Tools User's Guide. For a complete description of the features of the JTAG interface and its implementation, see MSP430 Programming With the JTAG Interface.

表 9-6. JTAG Pin Requirements and Functions

DEVICE SIGNAL	DIRECTION	FUNCTION
PJ.3/TCK	IN	JTAG clock input
PJ.2/TMS	IN	JTAG state control
PJ.1/TDI/TCLK	IN	JTAG data input, TCLK input
PJ.0/TDO	OUT	JTAG data output
TEST/SBWTCK	IN	Enable JTAG pins
$\overline{\text{RST}}$/NMI/SBWTDIO	IN	External reset
VCC		Power supply
VSS		Ground supply

9.8.2 Spy-Bi-Wire Interface

In addition to the standard JTAG interface, the MSP430 family supports the two wire Spy-Bi-Wire interface. Spy-Bi-Wire can be used to interface with MSP430 development tools and device programmers. 表 9-7 lists the Spy-Bi-Wire interface pin requirements. For further details on interfacing to development tools and device programmers, see the MSP430 Hardware Tools User's Guide. For a complete description of the features of the JTAG interface and its implementation, see MSP430 Programming With the JTAG Interface.

表 9-7. Spy-Bi-Wire Pin Requirements and Functions

DEVICE SIGNAL	DIRECTION	FUNCTION
TEST/SBWTCK	IN	Spy-Bi-Wire clock input
$\overline{\text{RST}}$/NMI/SBWTDIO	IN, OUT	Spy-Bi-Wire data input/output
VCC		Power supply
VSS		Ground supply

9.9 Flash Memory

The flash memory can be programmed by the JTAG port, Spy-Bi-Wire (SBW), the BSL, or in-system by the CPU. The CPU can perform single-byte, single-word, and long-word writes to the flash memory. Features of the flash memory include:

- Flash memory has n segments of main memory and four segments of information memory (A to D) of 128 bytes each. Each segment in main memory is 512 bytes in size.

- Segments 0 to n may be erased in one step, or each segment may be individually erased.
- Segments A to D can be erased individually, or as a group with segments 0 to n. Segments A to D are also called *information memory*.
- Segment A can be locked separately.

9.10 RAM

The RAM is made up of n sectors. Each sector can be completely powered down to save leakage; however, all data is lost. Features of the RAM include:

- RAM has n sectors. The size of a sector can be found in セクション 9.6.
- Each sector 0 to n can be complete disabled; however, data retention is lost.
- Each sector 0 to n automatically enters low power retention mode when possible.

9.11 Backup RAM

The backup RAM provides a limited number of bytes of RAM that are retained during LPMx.5 and during operation from a backup supply if the Battery Backup System module is implemented.

Eight bytes of backup RAM are available. The backup RAM can be wordwise accessed by the control registers BAKMEM0, BAKMEM1, BAKMEM2, and BAKMEM3.

9.12 Peripherals

Peripherals are connected to the CPU through data, address, and control buses. Peripherals can be managed using all instructions. For complete module descriptions, see the MSP430F5xx and MSP430F6xx Family User's Guide.

9.12.1 Digital I/O

Up to nine 8-bit I/O ports are implemented: P1 through P6, P8, and P9 are complete, P7 contains six individual I/O ports, and PJ contains four individual I/O ports.

- All individual I/O bits are independently programmable.
- Any combination of input, output, and interrupt conditions is possible.
- Programmable pullup or pulldown on all ports.
- Programmable drive strength on all ports.
- All eight bits of ports P1, P2, P3, and P4 support edge-selectable interrupt input.
- All instructions support read and write access to port-control registers.
- Ports can be accessed byte-wise (P1 through P9) or word-wise in pairs (PA through PD).

9.12.2 Port Mapping Controller

The port mapping controller allows the flexible and reconfigurable mapping of digital functions to port P2. 表 9-8 lists the mnemonic for each function that can be assigned.

表 9-8. Port Mapping Mnemonics and Functions

VALUE	PxMAPy MNEMONIC	INPUT PIN FUNCTION	OUTPUT PIN FUNCTION
0	PM_NONE	None	DV_{SS}
1	PM_CBOUT	–	Comparator_B output
	PM_TB0CLK	Timer TB0 clock input	–
2	PM_ADC12CLK	–	ADC12CLK
	PM_DMAE0	DMAE0 Input	–
3	PM_SVMOUT	–	SVM output
	PM_TB0OUTH	Timer TB0 high-impedance input TB0OUTH	–
4	PM_TB0CCR0B	Timer TB0 CCR0 capture input CCI0B	Timer TB0: TB0.0 compare output Out0
5	PM_TB0CCR1B	Timer TB0 CCR1 capture input CCI1B	Timer TB0: TB0.1 compare output Out1
6	PM_TB0CCR2B	Timer TB0 CCR2 capture input CCI2B	Timer TB0: TB0.2 compare output Out2
7	PM_TB0CCR3B	Timer TB0 CCR3 capture input CCI3B	Timer TB0: TB0.3 compare output Out3

Copyright © 2021 Texas Instruments Incorporated

表 9-8. Port Mapping Mnemonics and Functions (continued)

VALUE	PxMAPy MNEMONIC	INPUT PIN FUNCTION	OUTPUT PIN FUNCTION
8	PM_TB0CCR4B	Timer TB0 CCR4 capture input CCI4B	Timer TB0: TB0.4 compare output Out4
9	PM_TB0CCR5B	Timer TB0 CCR5 capture input CCI5B	Timer TB0: TB0.5 compare output Out5
10	PM_TB0CCR6B	Timer TB0 CCR6 capture input CCI6B	Timer TB0: TB0.6 compare output Out6
11	PM_UCA0RXD	USCI_A0 UART RXD (Direction controlled by USCI – input)	
	PM_UCA0SOMI	USCI_A0 SPI slave out master in (direction controlled by USCI)	
12	PM_UCA0TXD	USCI_A0 UART TXD (Direction controlled by USCI – output)	
	PM_UCA0SIMO	USCI_A0 SPI slave in master out (direction controlled by USCI)	
13	PM_UCA0CLK	USCI_A0 clock input/output (direction controlled by USCI)	
	PM_UCB0STE	USCI_B0 SPI slave transmit enable (direction controlled by USCI – input)	
14	PM_UCB0SOMI	USCI_B0 SPI slave out master in (direction controlled by USCI)	
	PM_UCB0SCL	USCI_B0 I^2C clock (open drain and direction controlled by USCI)	
15	PM_UCB0SIMO	USCI_B0 SPI slave in master out (direction controlled by USCI)	
	PM_UCB0SDA	USCI_B0 I^2C data (open drain and direction controlled by USCI)	
16	PM_UCB0CLK	USCI_B0 clock input/output (direction controlled by USCI)	
	PM_UCA0STE	USCI_A0 SPI slave transmit enable (direction controlled by USCI – input)	
17	PM_MCLK	–	MCLK
18	Reserved	Reserved for test purposes. Do not use this setting.	
19	Reserved	Reserved for test purposes. Do not use this setting.	
20–30	Reserved	None	DVSS
31 (0FFh)(1)	PM_ANALOG	Disables the output driver and the input Schmitt-trigger to prevent parasitic cross currents when applying analog signals.	

(1) The value of the PM_ANALOG mnemonic is set to 0FFh. The port mapping registers are 5 bits wide, and the upper bits are ignored, which results in a maximum value of 31.

表 9-9 lists the default values for all pins that support port mapping.

表 9-9. Default Mapping

PIN	PxMAPy MNEMONIC	INPUT PIN FUNCTION	OUTPUT PIN FUNCTION
P2.0/P2MAP0	PM_UCB0STE, PM_UCA0CLK	USCI_B0 SPI slave transmit enable (direction controlled by USCI – input), USCI_A0 clock input/output (direction controlled by USCI)	
P2.1/P2MAP1	PM_UCB0SIMO, PM_UCB0SDA	USCI_B0 SPI slave in master out (direction controlled by USCI), USCI_B0 I^2C data (open drain and direction controlled by USCI)	
P2.2/P2MAP2	PM_UCB0SOMI, PM_UCB0SCL	USCI_B0 SPI slave out master in (direction controlled by USCI), USCI_B0 I^2C clock (open drain and direction controlled by USCI)	
P2.3/P2MAP3	PM_UCB0CLK, PM_UCA0STE	USCI_B0 clock input/output (direction controlled by USCI), USCI_A0 SPI slave transmit enable (direction controlled by USCI – input)	
P2.4/P2MAP4	PM_UCA0TXD, PM_UCA0SIMO	USCI_A0 UART TXD (direction controlled by USCI – output), USCI_A0 SPI slave in master out (direction controlled by USCI)	
P2.5/P2MAP5	PM_UCA0RXD, PM_UCA0SOMI	USCI_A0 UART RXD (direction controlled by USCI – input), USCI_A0 SPI slave out master in (direction controlled by USCI)	
P2.6/P2MAP6/R03	PM_NONE	–	DVSS
P2.7/P2MAP7/LCDREF/R13	PM_NONE	–	DVSS

9.12.3 Oscillator and System Clock

The clock system is supported by the Unified Clock System (UCS) module that includes support for a 32-kHz watch crystal oscillator (in XT1 LF mode; XT1 HF mode is not supported), an internal very-low-power low-frequency oscillator (VLO), an internal trimmed low-frequency oscillator (REFO), an integrated internal digitally controlled oscillator (DCO), and a high-frequency crystal oscillator XT2. The UCS module is designed to meet the requirements of both low system cost and low power consumption. The UCS module features digital

frequency-locked loop (FLL) hardware that, in conjunction with a digital modulator, stabilizes the DCO frequency to a programmable multiple of the watch-crystal frequency. The internal DCO provides a fast turnon clock source and stabilizes in 3 µs (typical). The UCS module provides the following clock signals:

- Auxiliary clock (ACLK), sourced from a 32-kHz watch crystal (XT1), a high-frequency crystal (XT2), the internal low-frequency oscillator (VLO), the trimmed low-frequency oscillator (REFO), or the internal digitally-controlled oscillator DCO.
- Main clock (MCLK), the system clock used by the CPU. MCLK can be sourced by same sources available to ACLK.
- Sub-Main clock (SMCLK), the subsystem clock used by the peripheral modules. SMCLK can be sourced by same sources available to ACLK.
- ACLK/n, the buffered output of ACLK, ACLK/2, ACLK/4, ACLK/8, ACLK/16, ACLK/32.

9.12.4 Power-Management Module (PMM)

The PMM includes an integrated voltage regulator that supplies the core voltage to the device and contains programmable output levels to provide for power optimization. The PMM also includes supply voltage supervisor (SVS) and supply voltage monitoring (SVM) circuitry, as well as brownout protection. The brownout circuit is implemented to provide the proper internal reset signal to the device during power-on and power-off. The SVS and SVM circuitry detects if the supply voltage drops below a user-selectable level and supports both supply voltage supervision (the device is automatically reset) and supply voltage monitoring (the device is not automatically reset). SVS and SVM circuitry is available on the primary supply and core supply.

9.12.5 Hardware Multiplier (MPY) (Link to User's Guide)

The multiplication operation is supported by a dedicated peripheral module. The module performs operations with 32-, 24-, 16-, and 8-bit operands. The module supports signed and unsigned multiplication as well as signed and unsigned multiply-and-accumulate operations.

9.12.6 Real-Time Clock (RTC_B)

The RTC_B module can be configured for real-time clock (RTC) or calendar mode providing seconds, minutes, hours, day of week, day of month, month, and year. Calendar mode integrates an internal calendar which compensates for months with less than 31 days and includes leap year correction. The RTC_B also supports flexible alarm functions and offset-calibration hardware. The implementation on this device supports operation in LPM3.5 mode and operation from a backup supply.

Using the MSP430 RTC_B Module With Battery Backup Supply describes how to use the RTC_B with battery backup supply functionality to retain the time and keep the RTC counting through loss of main power supply, and how to perform correct reinitialization when the main power supply is restored.

9.12.7 Watchdog Timer (WDT_A)

The primary function of the WDT_A module is to perform a controlled system restart after a software problem occurs. If the selected time interval expires, a system reset is generated. If the watchdog function is not needed in an application, the module can be configured as an interval timer and can generate interrupts at selected time intervals.

Copyright © 2021 Texas Instruments Incorporated

9.12.8 System Module (SYS)

The SYS module handles many of the system functions within the device. These include power-on reset and power-up clear handling, NMI source selection and management, reset interrupt vector generators, bootloader entry mechanisms, and configuration management (device descriptors). SYS also includes a data exchange mechanism through JTAG called a JTAG mailbox that can be used in the application.

表 9-10 lists the SYS interrupt vector registers.

表 9-10. System Module Interrupt Vector Registers

INTERRUPT VECTOR REGISTER	INTERRUPT EVENT	WORD ADDRESS	OFFSET	PRIORITY
SYSRSTIV, System Reset	No interrupt pending	019Eh	00h	
	Brownout (BOR)		02h	Highest
	RST/NMI (BOR)		04h	
	PMMSWBOR (BOR)		06h	
	LPM3.5 or LPM4.5 wakeup (BOR)		08h	
	Security violation (BOR)		0Ah	
	SVSL (POR)		0Ch	
	SVSH (POR)		0Eh	
	SVML_OVP (POR)		10h	
	SVMH_OVP (POR)		12h	
	PMMSWPOR (POR)		14h	
	WDT time-out (PUC)		16h	
	WDT key violation (PUC)		18h	
	KEYV flash key violation (PUC)		1Ah	
	Reserved		1Ch	
	Peripheral area fetch (PUC)		1Eh	
	PMM key violation (PUC)		20h	
	Reserved		22h to 3Eh	Lowest
SYSSNIV, System NMI	No interrupt pending	019Ch	00h	
	SVMLIFG		02h	Highest
	SVMHIFG		04h	
	DLYLIFG		06h	
	DLYHIFG		08h	
	VMAIFG		0Ah	
	JMBINIFG		0Ch	
	JMBOUTIFG		0Eh	
	SVMLVLRIFG		10h	
	SVMHVLRIFG		12h	
	Reserved		14h to 1Eh	Lowest
SYSUNIV, User NMI	No interrupt pending	019Ah	00h	
	NMIIFG		02h	Highest
	OFIFG		04h	
	ACCVIFG		06h	
	Reserved		08h to 1Eh	Lowest

9.12.9 DMA Controller

The DMA controller allows movement of data from one memory address to another without CPU intervention. For example, the DMA controller can be used to move data from the ADC12_A conversion memory to RAM. Using the DMA controller can increase the throughput of peripheral modules. The DMA controller reduces system power consumption by allowing the CPU to remain in sleep mode, without having to awaken to move data to or from a peripheral. 表 9-11 lists the trigger assignments for each DMA channel.

表 9-11. DMA Trigger Assignments

TRIGGER(1)	CHANNEL					
	0	1	2	3	4	5
0	DMAREQ					
1	TA0CCR0 CCIFG					
2	TA0CCR2 CCIFG					
3	TA1CCR0 CCIFG					
4	TA1CCR2 CCIFG					
5	TA2CCR0 CCIFG					
6	TA2CCR2 CCIFG					
7	TBCCR0 CCIFG					
8	TBCCR2 CCIFG					
9	Reserved					
10	Reserved					
11	Reserved					
12	Reserved					
13	Reserved					
14	Reserved					
15	Reserved					
16	UCA0RXIFG					
17	UCA0TXIFG					
18	UCB0RXIFG					
19	UCB0TXIFG					
20	UCA1RXIFG					
21	UCA1TXIFG					
22	UCB1RXIFG					
23	UCB1TXIFG					
24	ADC12IFGx					
25	DAC12_0IFG(2)					
26	DAC12_1IFG(2)					
27	Reserved					
28	Reserved					
29	MPY ready					
30	DMA5IFG	DMA0IFG	DMA1IFG	DMA2IFG	DMA3IFG	DMA4IFG
31	DMAE0					

(1) Reserved DMA triggers may be used by other devices in the family. Reserved DMA triggers will not cause any DMA trigger event when selected.
(2) Only on devices with peripheral module DAC12_A. Reserved on devices without DAC.

9.12.10 Universal Serial Communication Interface (USCI)

The USCI modules are used for serial data communication. The USCI module supports synchronous communication protocols such as SPI (3 or 4 pin) and I^2C, and asynchronous communication protocols such as

Copyright © 2021 Texas Instruments Incorporated

UART, enhanced UART with automatic baudrate detection, and IrDA. Each USCI module contains two portions, A and B.

The USCI_An module provides support for SPI (3 or 4 pin), UART, enhanced UART, or IrDA.

The USCI_Bn module provides support for SPI (3 or 4 pin) or I^2C.

The MSP430F643x series includes two complete USCI modules (n = 0 or 1).

9.12.11 Timer TA0

Timer TA0 is a 16-bit timer/counter (Timer_A type) with five capture/compare registers. TA0 can support multiple capture/compares, PWM outputs, and interval timing (see 表 9-12). TA0 also has extensive interrupt capabilities. Interrupts may be generated from the counter on overflow conditions and from each capture/compare register.

表 9-12. Timer TA0 Signal Connections

INPUT PIN NUMBER		DEVICE INPUT SIGNAL	MODULE INPUT SIGNAL	MODULE BLOCK	MODULE OUTPUT SIGNAL	DEVICE OUTPUT SIGNAL	OUTPUT PIN NUMBER	
PZ	ZCA, ZQW						PZ	ZCA, ZQW
34-P1.0	L5-P1.0	TA0CLK	TACLK	Timer	NA	NA		
		ACLK	ACLK					
		SMCLK	SMCLK					
34-P1.0	L5-P1.0	TA0CLK	$\overline{TACLK}$					
35-P1.1	M5-P1.1	TA0.0	CCI0A	CCR0	TA0	TA0.0	35-P1.1	M5-P1.1
		DV_{SS}	CCI0B					
		DV_{SS}	GND					
		DV_{CC}	V_{CC}					
36-P1.2	J6-P1.2	TA0.1	CCI1A	CCR1	TA1	TA0.1	36-P1.2	J6-P1.2
40-P1.6	J7-P1.6	TA0.1	CCI1B				40-P1.6	J7-P1.6
		DV_{SS}	GND				ADC12_A (internal) ADC12SHSx = {1}	
		DV_{CC}	V_{CC}					
37-P1.3	H6-P1.3	TA0.2	CCI2A	CCR2	TA2	TA0.2	37-P1.3	H6-P1.3
41-P1.7	M7-P1.7	TA0.2	CCI2B				41-P1.7	M7-P1.7
		DV_{SS}	GND					
		DV_{CC}	V_{CC}					
38-P1.4	M6-P1.4	TA0.3	CCI3A	CCR3	TA3	TA0.3	38-P1.4	M6-P1.4
		DV_{SS}	CCI3B					
		DV_{SS}	GND					
		DV_{CC}	V_{CC}					
39-P1.5	L6-P1.5	TA0.4	CCI4A	CCR4	TA4	TA0.4	39-P1.5	L6-P1.5
		DV_{SS}	CCI4B					
		DV_{SS}	GND					
		DV_{CC}	V_{CC}					

9.12.12 Timer TA1

Timer TA1 is a 16-bit timer/counter (Timer_A type) with three capture/compare registers. TA1 supports multiple capture/compares, PWM outputs, and interval timing (see 表 9-13). TA1 also has extensive interrupt capabilities. Interrupts may be generated from the counter on overflow conditions and from each capture/compare register.

表 9-13. Timer TA1 Signal Connections

INPUT PIN NUMBER		DEVICE INPUT SIGNAL	MODULE INPUT SIGNAL	MODULE BLOCK	MODULE OUTPUT SIGNAL	DEVICE OUTPUT SIGNAL	OUTPUT PIN NUMBER	
PZ	ZCA, ZQW						PZ	ZCA, ZQW
42-P3.0	L7-P3.0	TA1CLK	TACLK	Timer	NA	NA		
		ACLK	ACLK					
		SMCLK	SMCLK					
42-P3.0	L7-P3.0	TA1CLK	$\overline{\text{TACLK}}$					
43-P3.1	H7-P3.1	TA1.0	CCI0A	CCR0	TA0	TA1.0	43-P3.1	H7-P3.1
		DV_{SS}	CCI0B					
		DV_{SS}	GND					
		DV_{CC}	V_{CC}					
44-P3.2	M8-P3.2	TA1.1	CCI1A	CCR1	TA1	TA1.1	44-P3.2	M8-P3.2
		CBOUT (internal)	CCI1B				DAC12_A[(1)] DAC12_0, DAC12_1 (internal)	
		DV_{SS}	GND					
		DV_{CC}	V_{CC}					
45-P3.3	L8-P3.3	TA1.2	CCI2A	CCR2	TA2	TA1.2	45-P3.3	L8-P3.3
		ACLK (internal)	CCI2B					
		DV_{SS}	GND					
		DV_{CC}	V_{CC}					

(1) Only on devices with peripheral module DAC12_A.

Copyright © 2021 Texas Instruments Incorporated

9.12.13 Timer TA2

Timer TA2 is a 16-bit timer/counter (Timer_A type) with three capture/compare registers. TA2 supports multiple capture/compares, PWM outputs, and interval timing (see 表 9-14). TA2 also has extensive interrupt capabilities. Interrupts may be generated from the counter on overflow conditions and from each capture/compare register.

表 9-14. Timer TA2 Signal Connections

INPUT PIN NUMBER		DEVICE INPUT SIGNAL	MODULE INPUT SIGNAL	MODULE BLOCK	MODULE OUTPUT SIGNAL	DEVICE OUTPUT SIGNAL	OUTPUT PIN NUMBER	
PZ	ZCA, ZQW						PZ	ZCA, ZQW
46-P3.4	J8-P3.4	TA2CLK	TACLK	Timer	NA	NA		
		ACLK	ACLK					
		SMCLK	SMCLK					
46-P3.4	J8-P3.4	TA2CLK	$\overline{\text{TACLK}}$					
47-P3.5	M9-P3.5	TA2.0	CCI0A	CCR0	TA0	TA2.0	47-P3.5	M9-P3.5
		DV_{SS}	CCI0B					
		DV_{SS}	GND					
		DV_{CC}	V_{CC}					
48-P3.6	L9-P3.6	TA2.1	CCI1A	CCR1	TA1	TA2.1	48-P3.6	L9-P3.6
		CBOUT (internal)	CCI1B					
		DV_{SS}	GND					
		DV_{CC}	V_{CC}					
49-P3.7	M10-P3.7	TA2.2	CCI2A	CCR2	TA2	TA2.2	49-P3.7	M10-P3.7
		ACLK (internal)	CCI2B					
		DV_{SS}	GND					
		DV_{CC}	V_{CC}					

9.12.14 Timer TB0

Timer TB0 is a 16-bit timer/counter (Timer_B type) with seven capture/compare registers. TB0 supports multiple capture/compares, PWM outputs, and interval timing (see 表 9-15). TB0 also has extensive interrupt capabilities. Interrupts may be generated from the counter on overflow conditions and from each capture/compare register.

表 9-15. Timer TB0 Signal Connections

INPUT PIN NUMBER		DEVICE INPUT SIGNAL	MODULE INPUT SIGNAL	MODULE BLOCK	MODULE OUTPUT SIGNAL	DEVICE OUTPUT SIGNAL	OUTPUT PIN NUMBER	
PZ	ZCA, ZQW						PZ	ZCA, ZQW
58-P8.0 P2MAPx(2)	J11-P8.0 P2MAPx(2)	TB0CLK	TB0CLK	Timer	NA	NA		
		ACLK	ACLK					
		SMCLK	SMCLK					
58-P8.0 P2MAPx(2)	J11-P8.0 P2MAPx(2)	TB0CLK	$\overline{\text{TB0CLK}}$					
50-P4.0	J9-P4.0	TB0.0	CCI0A	CCR0	TB0	TB0.0	50-P4.0	J9-P4.0
P2MAPx(2)	P2MAPx(2)	TB0.0	CCI0B				P2MAPx(2)	P2MAPx(2)
		DV_{SS}	GND				ADC12 (internal) ADC12SHSx = {2}	
		DV_{CC}	V_{CC}					
51-P4.1	M11-P4.1	TB0.1	CCI1A	CCR1	TB1	TB0.1	51-P4.1	M11-P4.1
P2MAPx(2)	P2MAPx(2)	TB0.1	CCI1B				P2MAPx(2)	P2MAPx(2)
		DV_{SS}	GND				ADC12 (internal) ADC12SHSx = {3}	
		DV_{CC}	V_{CC}					
52-P4.2	L10-P4.2	TB0.2	CCI2A	CCR2	TB2	TB0.2	52-P4.2	L10-P4.2
P2MAPx(2)	P2MAPx(2)	TB0.2	CCI2B				P2MAPx(2)	P2MAPx(2)
		DV_{SS}	GND				DAC12_A(1) (internal) DAC12_0, DAC12_1	
		DV_{CC}	V_{CC}					
53-P4.3	M12-P4.3	TB0.3	CCI3A	CCR3	TB3	TB0.3	53-P4.3	M12-P4.3
P2MAPx(2)	P2MAPx(2)	TB0.3	CCI3B				P2MAPx(2)	P2MAPx(2)
		DV_{SS}	GND					
		DV_{CC}	V_{CC}					
54-P4.4	L12-P4.4	TB0.4	CCI4A	CCR4	TB4	TB0.4	54-P4.4	L12-P4.4
P2MAPx(2)	P2MAPx(2)	TB0.4	CCI4B				P2MAPx(2)	P2MAPx(2)
		DV_{SS}	GND					
		DV_{CC}	V_{CC}					
55-P4.5	L11-P4.5	TB0.5	CCI5A	CCR5	TB5	TB0.5	55-P4.5	L11-P4.5
P2MAPx(2)	P2MAPx(2)	TB0.5	CCI5B				P2MAPx(2)	P2MAPx(2)
		DV_{SS}	GND					
		DV_{CC}	V_{CC}					
56-P4.6	K11-P4.6	TB0.6	CCI6A	CCR6	TB6	TB0.6	56-P4.6	K11-P4.6
P2MAPx(2)	P2MAPx(2)	TB0.6	CCI6B				P2MAPx(2)	P2MAPx(2)
		DV_{SS}	GND					
		DV_{CC}	V_{CC}					

(1) Only on devices with peripheral module DAC12_A.
(2) Timer functions selectable by the port mapping controller.

Copyright © 2021 Texas Instruments Incorporated

9.12.15 Comparator_B

The primary function of the Comparator_B module is to support precision slope analog-to-digital conversions, battery voltage supervision, and monitoring of external analog signals.

9.12.16 ADC12_A

The ADC12_A module supports fast 12-bit analog-to-digital conversions. The module implements a 12-bit SAR core, sample select control, reference generator, and a 16-word conversion-and-control buffer. The conversion-and-control buffer allows up to 16 independent ADC samples to be converted and stored without any CPU intervention.

The DAC12_A module is a 12-bit R-ladder voltage-output DAC. The DAC12_A may be used in 8-bit or 12-bit mode, and may be used with the DMA controller. When multiple DAC12_A modules are present, they may be grouped together for synchronous operation.

9.12.18 CRC16

The CRC16 module produces a signature based on a sequence of entered data values and can be used for data checking purposes. The CRC16 module signature is based on the CRC-CCITT standard.

9.12.19 Voltage Reference (REF) Module

The REF module generates all of the critical reference voltages that can be used by the various analog peripherals in the device.

9.12.20 LCD_B

The LCD_B driver generates the segment and common signals that are required to drive a liquid crystal display (LCD). The LCD_B controller has dedicated data memories to hold segment drive information. Common and segment signals are generated as defined by the mode. Static, 2-mux, 3-mux, and 4-mux LCDs are supported. The module can provide a LCD voltage independent of the supply voltage with its integrated charge pump. It is possible to control the level of the LCD voltage, and thus the contrast, by software. The module also provides an automatic blinking capability for individual segments.

9.12.21 LDO and PU Port

The integrated 3.3-V power system incorporates an integrated 3.3-V LDO regulator that allows the entire MSP430 microcontroller to be powered from nominal 5-V LDOI when it is made available for the system. Alternatively, the power system can supply power only to other components within the system, or it can be unused altogether.

The Port U pins (PU.0 and PU.1) function as general-purpose high-current I/O pins. These pins can only be configured together as either both inputs or both outputs. Port U is supplied by the LDOO rail. If the 3.3-V LDO is not being used in the system (disabled), the LDOO pin can be supplied externally.

9.12.22 Embedded Emulation Module (EEM)

The EEM supports real-time in-system debugging. The L version of the EEM has the following features:

- Eight hardware triggers or breakpoints on memory access
- Two hardware triggers or breakpoints on CPU register write access
- Up to 10 hardware triggers can be combined to form complex triggers or breakpoints
- Two cycle counters
- Sequencer
- State storage
- Clock control on module level

9.12.23 Peripheral File Map

表 9-16 lists the register base address for all of the available peripheral modules.

表 9-16. Peripherals

MODULE NAME	BASE ADDRESS	OFFSET ADDRESS RANGE(1)
Special Functions (see 表 9-17)	0100h	000h to 01Fh
PMM (see 表 9-18)	0120h	000h to 010h
Flash Control (see 表 9-19)	0140h	000h to 00Fh
CRC16 (see 表 9-20)	0150h	000h to 007h
RAM Control (see 表 9-21)	0158h	000h to 001h
Watchdog (see 表 9-22)	015Ch	000h to 001h
UCS (see 表 9-23)	0160h	000h to 01Fh
SYS (see 表 9-24)	0180h	000h to 01Fh
Shared Reference (see 表 9-25)	01B0h	000h to 001h
Port Mapping Control (see 表 9-26)	01C0h	000h to 003h
Port Mapping Port P2 (see 表 9-26)	01D0h	000h to 007h
Port P1, P2 (see 表 9-27)	0200h	000h to 01Fh
Port P3, P4 (see 表 9-28)	0220h	000h to 01Fh
Port P5, P6 (see 表 9-29)	0240h	000h to 00Bh
Port P7, P8 (see 表 9-30)	0260h	000h to 00Bh
Port P9 (see 表 9-31)	0280h	000h to 00Bh
Port PJ (see 表 9-32)	0320h	000h to 01Fh
Timer TA0 (see 表 9-33)	0340h	000h to 02Eh
Timer TA1 (see 表 9-34)	0380h	000h to 02Eh
Timer TB0 (see 表 9-35)	03C0h	000h to 02Eh
Timer TA2 (see 表 9-36)	0400h	000h to 02Eh
Battery Backup (see 表 9-37)	0480h	000h to 01Fh
RTC_B (see 表 9-38)	04A0h	000h to 01Fh
32-bit Hardware Multiplier (see 表 9-39)	04C0h	000h to 02Fh
DMA General Control (see 表 9-40)	0500h	000h to 00Fh
DMA Channel 0 (see 表 9-40)	0510h	000h to 00Ah
DMA Channel 1 (see 表 9-40)	0520h	000h to 00Ah
DMA Channel 2 (see 表 9-40)	0530h	000h to 00Ah
DMA Channel 3 (see 表 9-40)	0540h	000h to 00Ah
DMA Channel 4 (see 表 9-40)	0550h	000h to 00Ah
DMA Channel 5 (see 表 9-40)	0560h	000h to 00Ah
USCI_A0 (see 表 9-41)	05C0h	000h to 01Fh
USCI_B0 (see 表 9-42)	05E0h	000h to 01Fh
USCI_A1 (see 表 9-43)	0600h	000h to 01Fh
USCI_B1 (see 表 9-44)	0620h	000h to 01Fh
ADC12_A (see 表 9-45)	0700h	000h to 03Fh
DAC12_A (see 表 9-46)	0780h	000h to 01Fh
Comparator_B (see 表 9-47)	08C0h	000h to 00Fh
LDO and Port U configuration (see 表 9-48)	0900h	000h to 014h
LCD_B control (see 表 9-49)	0A00h	000h to 05Fh

(1) For a detailed description of the individual control register offset addresses, see the *MSP430F5xx and MSP430F6xx Family User's Guide*.

Copyright © 2021 Texas Instruments Incorporated

表 9-17. Special Function Registers (Base Address: 0100h)

REGISTER DESCRIPTION	REGISTER	OFFSET
SFR interrupt enable	SFRIE1	00h
SFR interrupt flag	SFRIFG1	02h
SFR reset pin control	SFRRPCR	04h

表 9-18. PMM Registers (Base Address: 0120h)

REGISTER DESCRIPTION	REGISTER	OFFSET
PMM control 0	PMMCTL0	00h
PMM control 1	PMMCTL1	02h
SVS high-side control	SVSMHCTL	04h
SVS low-side control	SVSMLCTL	06h
PMM interrupt flags	PMMIFG	0Ch
PMM interrupt enable	PMMIE	0Eh
PMM power mode 5 control	PM5CTL0	10h

表 9-19. Flash Control Registers (Base Address: 0140h)

REGISTER DESCRIPTION	REGISTER	OFFSET
Flash control 1	FCTL1	00h
Flash control 3	FCTL3	04h
Flash control 4	FCTL4	06h

表 9-20. CRC16 Registers (Base Address: 0150h)

REGISTER DESCRIPTION	REGISTER	OFFSET
CRC data input	CRC16DI	00h
CRC result	CRC16INIRES	04h

表 9-21. RAM Control Registers (Base Address: 0158h)

REGISTER DESCRIPTION	REGISTER	OFFSET
RAM control 0	RCCTL0	00h

表 9-22. Watchdog Registers (Base Address: 015Ch)

REGISTER DESCRIPTION	REGISTER	OFFSET
Watchdog timer control	WDTCTL	00h

表 9-23. UCS Registers (Base Address: 0160h)

REGISTER DESCRIPTION	REGISTER	OFFSET
UCS control 0	UCSCTL0	00h
UCS control 1	UCSCTL1	02h
UCS control 2	UCSCTL2	04h
UCS control 3	UCSCTL3	06h
UCS control 4	UCSCTL4	08h
UCS control 5	UCSCTL5	0Ah
UCS control 6	UCSCTL6	0Ch
UCS control 7	UCSCTL7	0Eh
UCS control 8	UCSCTL8	10h

表 9-24. SYS Registers (Base Address: 0180h)

REGISTER DESCRIPTION	REGISTER	OFFSET
System control	SYSCTL	00h

Copyright © 2021 Texas Instruments Incorporated

表 9-24. SYS Registers (Base Address: 0180h) (continued)

REGISTER DESCRIPTION	REGISTER	OFFSET
Bootloader configuration area	SYSBSLC	02h
JTAG mailbox control	SYSJMBC	06h
JTAG mailbox input 0	SYSJMBI0	08h
JTAG mailbox input 1	SYSJMBI1	0Ah
JTAG mailbox output 0	SYSJMBO0	0Ch
JTAG mailbox output 1	SYSJMBO1	0Eh
Bus error vector generator	SYSBERRIV	18h
User NMI vector generator	SYSUNIV	1Ah
System NMI vector generator	SYSSNIV	1Ch
Reset vector generator	SYSRSTIV	1Eh

表 9-25. Shared Reference Registers (Base Address: 01B0h)

REGISTER DESCRIPTION	REGISTER	OFFSET
Shared reference control	REFCTL	00h

表 9-26. Port Mapping Registers (Base Address of Port Mapping Control: 01C0h, Port P2: 01D0h)

REGISTER DESCRIPTION	REGISTER	OFFSET
Port mapping password	PMAPPWD	00h
Port mapping control	PMAPCTL	02h
Port P2.0 mapping	P2MAP0	00h
Port P2.1 mapping	P2MAP1	01h
Port P2.2 mapping	P2MAP2	02h
Port P2.3 mapping	P2MAP3	03h
Port P2.4 mapping	P2MAP4	04h
Port P2.5 mapping	P2MAP5	05h
Port P2.6 mapping	P2MAP6	06h
Port P2.7 mapping	P2MAP7	07h

表 9-27. Port P1, P2 Registers (Base Address: 0200h)

REGISTER DESCRIPTION	REGISTER	OFFSET
Port P1 input	P1IN	00h
Port P1 output	P1OUT	02h
Port P1 direction	P1DIR	04h
Port P1 pullup/pulldown enable	P1REN	06h
Port P1 drive strength	P1DS	08h
Port P1 selection	P1SEL	0Ah
Port P1 interrupt vector word	P1IV	0Eh
Port P1 interrupt edge select	P1IES	18h
Port P1 interrupt enable	P1IE	1Ah
Port P1 interrupt flag	P1IFG	1Ch
Port P2 input	P2IN	01h
Port P2 output	P2OUT	03h
Port P2 direction	P2DIR	05h
Port P2 pullup/pulldown enable	P2REN	07h
Port P2 drive strength	P2DS	09h
Port P2 selection	P2SEL	0Bh

Copyright © 2021 Texas Instruments Incorporated

表 9-27. Port P1, P2 Registers (Base Address: 0200h) (continued)

REGISTER DESCRIPTION	REGISTER	OFFSET
Port P2 interrupt vector word	P2IV	1Eh
Port P2 interrupt edge select	P2IES	19h
Port P2 interrupt enable	P2IE	1Bh
Port P2 interrupt flag	P2IFG	1Dh

表 9-28. Port P3, P4 Registers (Base Address: 0220h)

REGISTER DESCRIPTION	REGISTER	OFFSET
Port P3 input	P3IN	00h
Port P3 output	P3OUT	02h
Port P3 direction	P3DIR	04h
Port P3 pullup/pulldown enable	P3REN	06h
Port P3 drive strength	P3DS	08h
Port P3 selection	P3SEL	0Ah
Port P3 interrupt vector word	P3IV	0Eh
Port P3 interrupt edge select	P3IES	18h
Port P3 interrupt enable	P3IE	1Ah
Port P3 interrupt flag	P3IFG	1Ch
Port P4 input	P4IN	01h
Port P4 output	P4OUT	03h
Port P4 direction	P4DIR	05h
Port P4 pullup/pulldown enable	P4REN	07h
Port P4 drive strength	P4DS	09h
Port P4 selection	P4SEL	0Bh
Port P4 interrupt vector word	P4IV	1Eh
Port P4 interrupt edge select	P4IES	19h
Port P4 interrupt enable	P4IE	1Bh
Port P4 interrupt flag	P4IFG	1Dh

表 9-29. Port P5, P6 Registers (Base Address: 0240h)

REGISTER DESCRIPTION	REGISTER	OFFSET
Port P5 input	P5IN	00h
Port P5 output	P5OUT	02h
Port P5 direction	P5DIR	04h
Port P5 pullup/pulldown enable	P5REN	06h
Port P5 drive strength	P5DS	08h
Port P5 selection	P5SEL	0Ah
Port P6 input	P6IN	01h
Port P6 output	P6OUT	03h
Port P6 direction	P6DIR	05h
Port P6 pullup/pulldown enable	P6REN	07h
Port P6 drive strength	P6DS	09h
Port P6 selection	P6SEL	0Bh

表 9-30. Port P7, P8 Registers (Base Address: 0260h)

REGISTER DESCRIPTION	REGISTER	OFFSET
Port P7 input	P7IN	00h

Copyright © 2021 Texas Instruments Incorporated

表 9-30. Port P7, P8 Registers (Base Address: 0260h) (continued)

REGISTER DESCRIPTION	REGISTER	OFFSET
Port P7 output	P7OUT	02h
Port P7 direction	P7DIR	04h
Port P7 pullup/pulldown enable	P7REN	06h
Port P7 drive strength	P7DS	08h
Port P7 selection	P7SEL	0Ah
Port P8 input	P8IN	01h
Port P8 output	P8OUT	03h
Port P8 direction	P8DIR	05h
Port P8 pullup/pulldown enable	P8REN	07h
Port P8 drive strength	P8DS	09h
Port P8 selection	P8SEL	0Bh

表 9-31. Port P9 Register (Base Address: 0280h)

REGISTER DESCRIPTION	REGISTER	OFFSET
Port P9 input	P9IN	00h
Port P9 output	P9OUT	02h
Port P9 direction	P9DIR	04h
Port P9 pullup/pulldown enable	P9REN	06h
Port P9 drive strength	P9DS	08h
Port P9 selection	P9SEL	0Ah

表 9-32. Port J Registers (Base Address: 0320h)

REGISTER DESCRIPTION	REGISTER	OFFSET
Port PJ input	PJIN	00h
Port PJ output	PJOUT	02h
Port PJ direction	PJDIR	04h
Port PJ pullup/pulldown enable	PJREN	06h
Port PJ drive strength	PJDS	08h

表 9-33. TA0 Registers (Base Address: 0340h)

REGISTER DESCRIPTION	REGISTER	OFFSET
TA0 control	TA0CTL	00h
Capture/compare control 0	TA0CCTL0	02h
Capture/compare control 1	TA0CCTL1	04h
Capture/compare control 2	TA0CCTL2	06h
Capture/compare control 3	TA0CCTL3	08h
Capture/compare control 4	TA0CCTL4	0Ah
TA0 counter	TA0R	10h
Capture/compare 0	TA0CCR0	12h
Capture/compare 1	TA0CCR1	14h
Capture/compare 2	TA0CCR2	16h
Capture/compare 3	TA0CCR3	18h
Capture/compare 4	TA0CCR4	1Ah
TA0 expansion 0	TA0EX0	20h
TA0 interrupt vector	TA0IV	2Eh

Copyright © 2021 Texas Instruments Incorporated

表 9-34. TA1 Registers (Base Address: 0380h)

REGISTER DESCRIPTION	REGISTER	OFFSET
TA1 control	TA1CTL	00h
Capture/compare control 0	TA1CCTL0	02h
Capture/compare control 1	TA1CCTL1	04h
Capture/compare control 2	TA1CCTL2	06h
TA1 counter	TA1R	10h
Capture/compare 0	TA1CCR0	12h
Capture/compare 1	TA1CCR1	14h
Capture/compare 2	TA1CCR2	16h
TA1 expansion 0	TA1EX0	20h
TA1 interrupt vector	TA1IV	2Eh

表 9-35. TB0 Registers (Base Address: 03C0h)

REGISTER DESCRIPTION	REGISTER	OFFSET
TB0 control	TB0CTL	00h
Capture/compare control 0	TB0CCTL0	02h
Capture/compare control 1	TB0CCTL1	04h
Capture/compare control 2	TB0CCTL2	06h
Capture/compare control 3	TB0CCTL3	08h
Capture/compare control 4	TB0CCTL4	0Ah
Capture/compare control 5	TB0CCTL5	0Ch
Capture/compare control 6	TB0CCTL6	0Eh
TB0 counter	TB0R	10h
Capture/compare 0	TB0CCR0	12h
Capture/compare 1	TB0CCR1	14h
Capture/compare 2	TB0CCR2	16h
Capture/compare 3	TB0CCR3	18h
Capture/compare 4	TB0CCR4	1Ah
Capture/compare 5	TB0CCR5	1Ch
Capture/compare 6	TB0CCR6	1Eh
TB0 expansion 0	TB0EX0	20h
TB0 interrupt vector	TB0IV	2Eh

表 9-36. TA2 Registers (Base Address: 0400h)

REGISTER DESCRIPTION	REGISTER	OFFSET
TA2 control	TA2CTL	00h
Capture/compare control 0	TA2CCTL0	02h
Capture/compare control 1	TA2CCTL1	04h
Capture/compare control 2	TA2CCTL2	06h
TA2 counter	TA2R	10h
Capture/compare 0	TA2CCR0	12h
Capture/compare 1	TA2CCR1	14h
Capture/compare 2	TA2CCR2	16h
TA2 expansion 0	TA2EX0	20h
TA2 interrupt vector	TA2IV	2Eh

Copyright © 2021 Texas Instruments Incorporated

表 9-37. Battery Backup Registers (Base Address: 0480h)

REGISTER DESCRIPTION	REGISTER	OFFSET
Battery backup memory 0	BAKMEM0	00h
Battery backup memory 1	BAKMEM1	02h
Battery backup memory 2	BAKMEM2	04h
Battery backup memory 3	BAKMEM3	06h
Battery backup control	BAKCTL	1Ch
Battery charger control	BAKCHCTL	1Eh

表 9-38. Real-Time Clock Registers (Base Address: 04A0h)

REGISTER DESCRIPTION	REGISTER	OFFSET
RTC control 0	RTCCTL0	00h
RTC control 1	RTCCTL1	01h
RTC control 2	RTCCTL2	02h
RTC control 3	RTCCTL3	03h
RTC prescaler 0 control	RTCPS0CTL	08h
RTC prescaler 1 control	RTCPS1CTL	0Ah
RTC prescaler 0	RTCPS0	0Ch
RTC prescaler 1	RTCPS1	0Dh
RTC interrupt vector word	RTCIV	0Eh
RTC seconds	RTCSEC	10h
RTC minutes	RTCMIN	11h
RTC hours	RTCHOUR	12h
RTC day of week	RTCDOW	13h
RTC days	RTCDAY	14h
RTC month	RTCMON	15h
RTC year low	RTCYEARL	16h
RTC year high	RTCYEARH	17h
RTC alarm minutes	RTCAMIN	18h
RTC alarm hours	RTCAHOUR	19h
RTC alarm day of week	RTCADOW	1Ah
RTC alarm days	RTCADAY	1Bh
Binary-to-BCD conversion	BIN2BCD	1Ch
BCD-to-binary conversion	BCD2BIN	1Eh

表 9-39. 32-Bit Hardware Multiplier Registers (Base Address: 04C0h)

REGISTER DESCRIPTION	REGISTER	OFFSET
16-bit operand 1 – multiply	MPY	00h
16-bit operand 1 – signed multiply	MPYS	02h
16-bit operand 1 – multiply accumulate	MAC	04h
16-bit operand 1 – signed multiply accumulate	MACS	06h
16-bit operand 2	OP2	08h
16 × 16 result low word	RESLO	0Ah
16 × 16 result high word	RESHI	0Ch
16 × 16 sum extension	SUMEXT	0Eh
32-bit operand 1 – multiply low word	MPY32L	10h
32-bit operand 1 – multiply high word	MPY32H	12h
32-bit operand 1 – signed multiply low word	MPYS32L	14h

Copyright © 2021 Texas Instruments Incorporated

表 9-39. 32-Bit Hardware Multiplier Registers (Base Address: 04C0h) (continued)

REGISTER DESCRIPTION	REGISTER	OFFSET
32-bit operand 1 – signed multiply high word	MPYS32H	16h
32-bit operand 1 – multiply accumulate low word	MAC32L	18h
32-bit operand 1 – multiply accumulate high word	MAC32H	1Ah
32-bit operand 1 – signed multiply accumulate low word	MACS32L	1Ch
32-bit operand 1 – signed multiply accumulate high word	MACS32H	1Eh
32-bit operand 2 – low word	OP2L	20h
32-bit operand 2 – high word	OP2H	22h
32 × 32 result 0 – least significant word	RES0	24h
32 × 32 result 1	RES1	26h
32 × 32 result 2	RES2	28h
32 × 32 result 3 – most significant word	RES3	2Ah
MPY32 control 0	MPY32CTL0	2Ch

表 9-40. DMA Registers (Base Address DMA General Control: 0500h, DMA Channel 0: 0510h, DMA Channel 1: 0520h, DMA Channel 2: 0530h, DMA Channel 3: 0540h, DMA Channel 4: 0550h, DMA Channel 5: 0560h)

REGISTER DESCRIPTION	REGISTER	OFFSET
DMA general control: DMA module control 0	DMACTL0	00h
DMA general control: DMA module control 1	DMACTL1	02h
DMA general control: DMA module control 2	DMACTL2	04h
DMA general control: DMA module control 3	DMACTL3	06h
DMA general control: DMA module control 4	DMACTL4	08h
DMA general control: DMA interrupt vector	DMAIV	0Ah
DMA channel 0 control	DMA0CTL	00h
DMA channel 0 source address low	DMA0SAL	02h
DMA channel 0 source address high	DMA0SAH	04h
DMA channel 0 destination address low	DMA0DAL	06h
DMA channel 0 destination address high	DMA0DAH	08h
DMA channel 0 transfer size	DMA0SZ	0Ah
DMA channel 1 control	DMA1CTL	00h
DMA channel 1 source address low	DMA1SAL	02h
DMA channel 1 source address high	DMA1SAH	04h
DMA channel 1 destination address low	DMA1DAL	06h
DMA channel 1 destination address high	DMA1DAH	08h
DMA channel 1 transfer size	DMA1SZ	0Ah
DMA channel 2 control	DMA2CTL	00h
DMA channel 2 source address low	DMA2SAL	02h
DMA channel 2 source address high	DMA2SAH	04h
DMA channel 2 destination address low	DMA2DAL	06h
DMA channel 2 destination address high	DMA2DAH	08h
DMA channel 2 transfer size	DMA2SZ	0Ah
DMA channel 3 control	DMA3CTL	00h
DMA channel 3 source address low	DMA3SAL	02h
DMA channel 3 source address high	DMA3SAH	04h
DMA channel 3 destination address low	DMA3DAL	06h
DMA channel 3 destination address high	DMA3DAH	08h

Copyright © 2021 Texas Instruments Incorporated

表 9-40. DMA Registers (Base Address DMA General Control: 0500h, DMA Channel 0: 0510h, DMA Channel 1: 0520h, DMA Channel 2: 0530h, DMA Channel 3: 0540h, DMA Channel 4: 0550h, DMA Channel 5: 0560h) (continued)

REGISTER DESCRIPTION	REGISTER	OFFSET
DMA channel 3 transfer size	DMA3SZ	0Ah
DMA channel 4 control	DMA4CTL	00h
DMA channel 4 source address low	DMA4SAL	02h
DMA channel 4 source address high	DMA4SAH	04h
DMA channel 4 destination address low	DMA4DAL	06h
DMA channel 4 destination address high	DMA4DAH	08h
DMA channel 4 transfer size	DMA4SZ	0Ah
DMA channel 5 control	DMA5CTL	00h
DMA channel 5 source address low	DMA5SAL	02h
DMA channel 5 source address high	DMA5SAH	04h
DMA channel 5 destination address low	DMA5DAL	06h
DMA channel 5 destination address high	DMA5DAH	08h
DMA channel 5 transfer size	DMA5SZ	0Ah

表 9-41. USCI_A0 Registers (Base Address: 05C0h)

REGISTER DESCRIPTION	REGISTER	OFFSET
USCI control 0	UCA0CTL0	00h
USCI control 1	UCA0CTL1	01h
USCI baud rate 0	UCA0BR0	06h
USCI baud rate 1	UCA0BR1	07h
USCI modulation control	UCA0MCTL	08h
USCI status	UCA0STAT	0Ah
USCI receive buffer	UCA0RXBUF	0Ch
USCI transmit buffer	UCA0TXBUF	0Eh
USCI LIN control	UCA0ABCTL	10h
USCI IrDA transmit control	UCA0IRTCTL	12h
USCI IrDA receive control	UCA0IRRCTL	13h
USCI interrupt enable	UCA0IE	1Ch
USCI interrupt flags	UCA0IFG	1Dh
USCI interrupt vector word	UCA0IV	1Eh

表 9-42. USCI_B0 Registers (Base Address: 05E0h)

REGISTER DESCRIPTION	REGISTER	OFFSET
USCI synchronous control 0	UCB0CTL0	00h
USCI synchronous control 1	UCB0CTL1	01h
USCI synchronous bit rate 0	UCB0BR0	06h
USCI synchronous bit rate 1	UCB0BR1	07h
USCI synchronous status	UCB0STAT	0Ah
USCI synchronous receive buffer	UCB0RXBUF	0Ch
USCI synchronous transmit buffer	UCB0TXBUF	0Eh
USCI I2C own address	UCB0I2COA	10h
USCI I2C slave address	UCB0I2CSA	12h
USCI interrupt enable	UCB0IE	1Ch
USCI interrupt flags	UCB0IFG	1Dh

Copyright © 2021 Texas Instruments Incorporated

表 9-42. USCI_B0 Registers (Base Address: 05E0h) (continued)

REGISTER DESCRIPTION	REGISTER	OFFSET
USCI interrupt vector word	UCB0IV	1Eh

表 9-43. USCI_A1 Registers (Base Address: 0600h)

REGISTER DESCRIPTION	REGISTER	OFFSET
USCI control 0	UCA1CTL0	00h
USCI control 1	UCA1CTL1	01h
USCI baud rate 0	UCA1BR0	06h
USCI baud rate 1	UCA1BR1	07h
USCI modulation control	UCA1MCTL	08h
USCI status	UCA1STAT	0Ah
USCI receive buffer	UCA1RXBUF	0Ch
USCI transmit buffer	UCA1TXBUF	0Eh
USCI LIN control	UCA1ABCTL	10h
USCI IrDA transmit control	UCA1IRTCTL	12h
USCI IrDA receive control	UCA1IRRCTL	13h
USCI interrupt enable	UCA1IE	1Ch
USCI interrupt flags	UCA1IFG	1Dh
USCI interrupt vector word	UCA1IV	1Eh

表 9-44. USCI_B1 Registers (Base Address: 0620h)

REGISTER DESCRIPTION	REGISTER	OFFSET
USCI synchronous control 0	UCB1CTL0	00h
USCI synchronous control 1	UCB1CTL1	01h
USCI synchronous bit rate 0	UCB1BR0	06h
USCI synchronous bit rate 1	UCB1BR1	07h
USCI synchronous status	UCB1STAT	0Ah
USCI synchronous receive buffer	UCB1RXBUF	0Ch
USCI synchronous transmit buffer	UCB1TXBUF	0Eh
USCI I2C own address	UCB1I2COA	10h
USCI I2C slave address	UCB1I2CSA	12h
USCI interrupt enable	UCB1IE	1Ch
USCI interrupt flags	UCB1IFG	1Dh
USCI interrupt vector word	UCB1IV	1Eh

表 9-45. ADC12_A Registers (Base Address: 0700h)

REGISTER DESCRIPTION	REGISTER	OFFSET
ADC12 control 0	ADC12CTL0	00h
ADC12 control 1	ADC12CTL1	02h
ADC12 control 2	ADC12CTL2	04h
Interrupt flag	ADC12IFG	0Ah
Interrupt enable	ADC12IE	0Ch
Interrupt vector word	ADC12IV	0Eh
ADC memory control 0	ADC12MCTL0	10h
ADC memory control 1	ADC12MCTL1	11h
ADC memory control 2	ADC12MCTL2	12h
ADC memory control 3	ADC12MCTL3	13h

Copyright © 2021 Texas Instruments Incorporated

表 9-45. ADC12_A Registers (Base Address: 0700h) (continued)

REGISTER DESCRIPTION	REGISTER	OFFSET
ADC memory control 4	ADC12MCTL4	14h
ADC memory control 5	ADC12MCTL5	15h
ADC memory control 6	ADC12MCTL6	16h
ADC memory control 7	ADC12MCTL7	17h
ADC memory control 8	ADC12MCTL8	18h
ADC memory control 9	ADC12MCTL9	19h
ADC memory control 10	ADC12MCTL10	1Ah
ADC memory control 11	ADC12MCTL11	1Bh
ADC memory control 12	ADC12MCTL12	1Ch
ADC memory control 13	ADC12MCTL13	1Dh
ADC memory control 14	ADC12MCTL14	1Eh
ADC memory control 15	ADC12MCTL15	1Fh
Conversion memory 0	ADC12MEM0	20h
Conversion memory 1	ADC12MEM1	22h
Conversion memory 2	ADC12MEM2	24h
Conversion memory 3	ADC12MEM3	26h
Conversion memory 4	ADC12MEM4	28h
Conversion memory 5	ADC12MEM5	2Ah
Conversion memory 6	ADC12MEM6	2Ch
Conversion memory 7	ADC12MEM7	2Eh
Conversion memory 8	ADC12MEM8	30h
Conversion memory 9	ADC12MEM9	32h
Conversion memory 10	ADC12MEM10	34h
Conversion memory 11	ADC12MEM11	36h
Conversion memory 12	ADC12MEM12	38h
Conversion memory 13	ADC12MEM13	3Ah
Conversion memory 14	ADC12MEM14	3Ch
Conversion memory 15	ADC12MEM15	3Eh

表 9-46. DAC12_A Registers (Base Address: 0780h)

REGISTER DESCRIPTION	REGISTER	OFFSET
DAC12_A channel 0 control 0	DAC12_0CTL0	00h
DAC12_A channel 0 control 1	DAC12_0CTL1	02h
DAC12_A channel 0 data	DAC12_0DAT	04h
DAC12_A channel 0 calibration control	DAC12_0CALCTL	06h
DAC12_A channel 0 calibration data	DAC12_0CALDAT	08h
DAC12_A channel 1 control 0	DAC12_1CTL0	10h
DAC12_A channel 1 control 1	DAC12_1CTL1	12h
DAC12_A channel 1 data	DAC12_1DAT	14h
DAC12_A channel 1 calibration control	DAC12_1CALCTL	16h
DAC12_A channel 1 calibration data	DAC12_1CALDAT	18h
DAC12_A interrupt vector word	DAC12IV	1Eh

表 9-47. Comparator_B Registers (Base Address: 08C0h)

REGISTER DESCRIPTION	REGISTER	OFFSET
Comp_B control 0	CBCTL0	00h

Copyright © 2021 Texas Instruments Incorporated

表 9-47. Comparator_B Registers (Base Address: 08C0h) (continued)

REGISTER DESCRIPTION	REGISTER	OFFSET
Comp_B control 1	CBCTL1	02h
Comp_B control 2	CBCTL2	04h
Comp_B control 3	CBCTL3	06h
Comp_B interrupt	CBINT	0Ch
Comp_B interrupt vector word	CBIV	0Eh

表 9-48. LDO and Port U Configuration Registers (Base Address: 0900h)

REGISTER DESCRIPTION	REGISTER	OFFSET
LDO key/ID	LDOKEYID	00h
PU port control	PUCTL	04h
LDO power control	LDOPWRCTL	08h

表 9-49. LCD_B Registers (Base Address: 0A00h)

REGISTER DESCRIPTION	REGISTER	OFFSET
LCD_B control 0	LCDBCTL0	000h
LCD_B control 1	LCDBCTL1	002h
LCD_B blinking control	LCDBBLKCTL	004h
LCD_B memory control	LCDBMEMCTL	006h
LCD_B voltage control	LCDBVCTL	008h
LCD_B port control 0	LCDBPCTL0	00Ah
LCD_B port control 1	LCDBPCTL1	00Ch
LCD_B port control 2	LCDBPCTL2	00Eh
LCD_B charge pump control	LCDBCTL0	012h
LCD_B interrupt vector word	LCDBIV	01Eh
LCD_B memory 1	LCDM1	020h
LCD_B memory 2	LCDM2	021h
⋮	⋮	⋮
LCD_B memory 22	LCDM22	035h
LCD_B blinking memory 1	LCDBM1	040h
LCD_B blinking memory 2	LCDBM2	041h
⋮	⋮	⋮
LCD_B blinking memory 22	LCDBM22	055h

Copyright © 2021 Texas Instruments Incorporated

9.13 Input/Output Diagrams

9.13.1 Port P1 (P1.0 to P1.7) Input/Output With Schmitt Trigger

図 9-2 shows the pin diagram. 表 9-50 summarizes how to select the pin function.

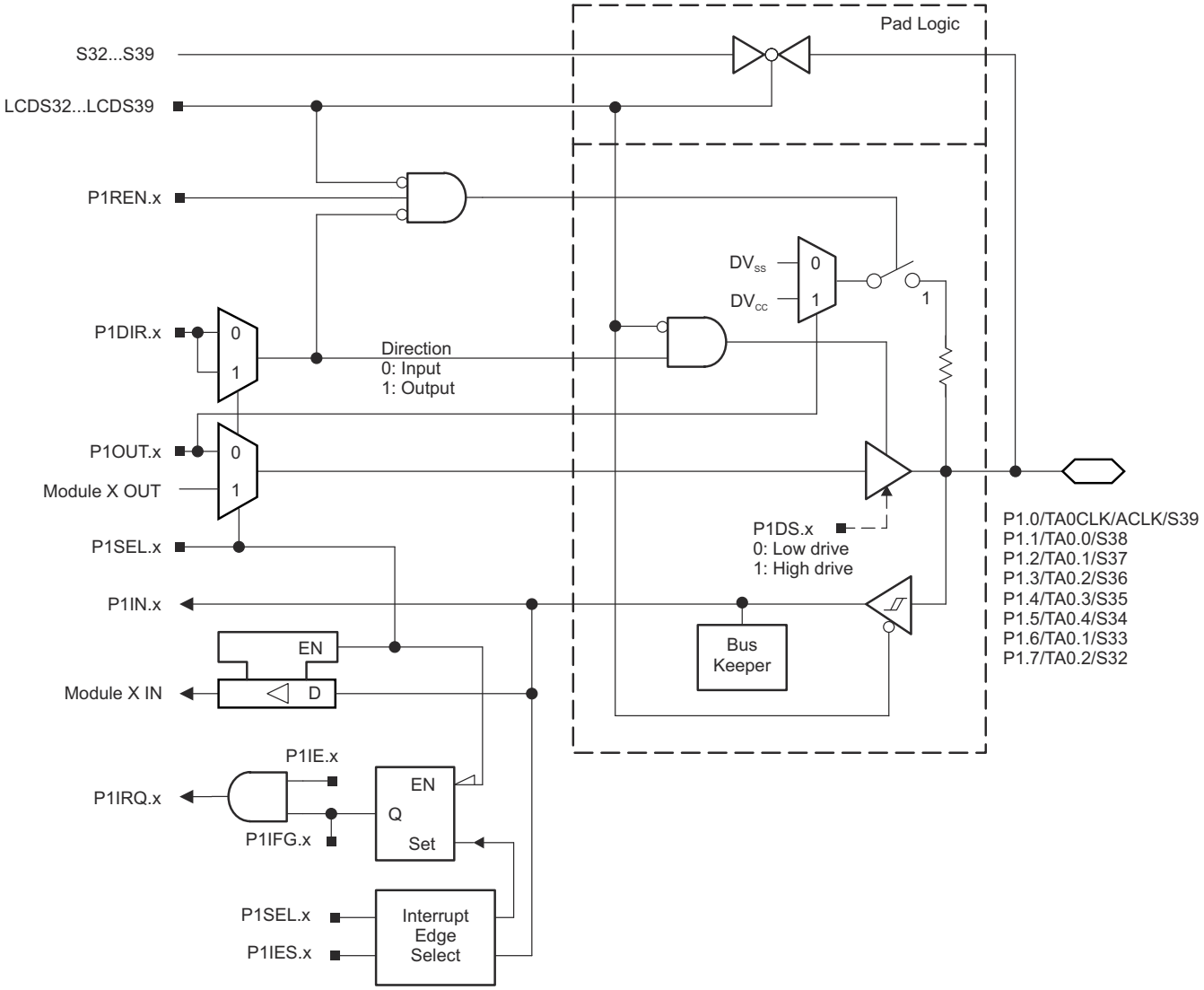

図 9-2. Port P1 (P1.0 to P1.7) Diagram

Copyright © 2021 Texas Instruments Incorporated

表 9-50. Port P1 (P1.0 to P1.7) Pin Functions

PIN NAME (P1.x)	x	FUNCTION	CONTROL BITS OR SIGNALS[1]		
			P1DIR.x	P1SEL.x	LCDS32...39
P1.0/TA0CLK/ACLK/ S39	0	P1.0 (I/O)	I: 0; O: 1	0	0
		Timer TA0.TA0CLK	0	1	0
		ACLK	1	1	0
		S39	X	X	1
P1.1/TA0.0/S38	1	P1.1 (I/O)	I: 0; O: 1	0	0
		Timer TA0.CCI0A capture input	0	1	0
		Timer TA0.0 output	1	1	0
		S38	X	X	1
P1.2/TA0.1/S37	2	P1.2 (I/O)	I: 0; O: 1	0	0
		Timer TA0.CCI1A capture input	0	1	0
		Timer TA0.1 output	1	1	0
		S37	X	X	1
P1.3/TA0.2/S36	3	P1.3 (I/O)	I: 0; O: 1	0	0
		Timer TA0.CCI2A capture input	0	1	0
		Timer TA0.2 output	1	1	0
		S36	X	X	1
P1.4/TA0.3/S35	4	P1.4 (I/O)	I: 0; O: 1	0	0
		Timer TA0.CCI3A capture input	0	1	0
		Timer TA0.3 output	1	1	0
		S35	X	X	1
P1.5/TA0.4/S34	5	P1.5 (I/O)	I: 0; O: 1	0	0
		Timer TA0.CCI4A capture input	0	1	0
		Timer TA0.4 output	1	1	0
		S34	X	X	1
P1.6/TA0.1/S33	6	P1.6 (I/O)	I: 0; O: 1	0	0
		Timer TA0.CCI1B capture input	0	1	0
		Timer TA0.1 output	1	1	0
		S33	X	X	1
P1.7/TA0.2/S32	7	P1.7 (I/O)	I: 0; O: 1	0	0
		Timer TA0.CCI2B capture input	0	1	0
		Timer TA0.2 output	1	1	0
		S32	X	X	1

9.13.2 Port P2 (P2.0 to P2.7) Input/Output With Schmitt Trigger

図 9-3 shows the pin diagram. 表 9-51 summarizes how to select the pin function.

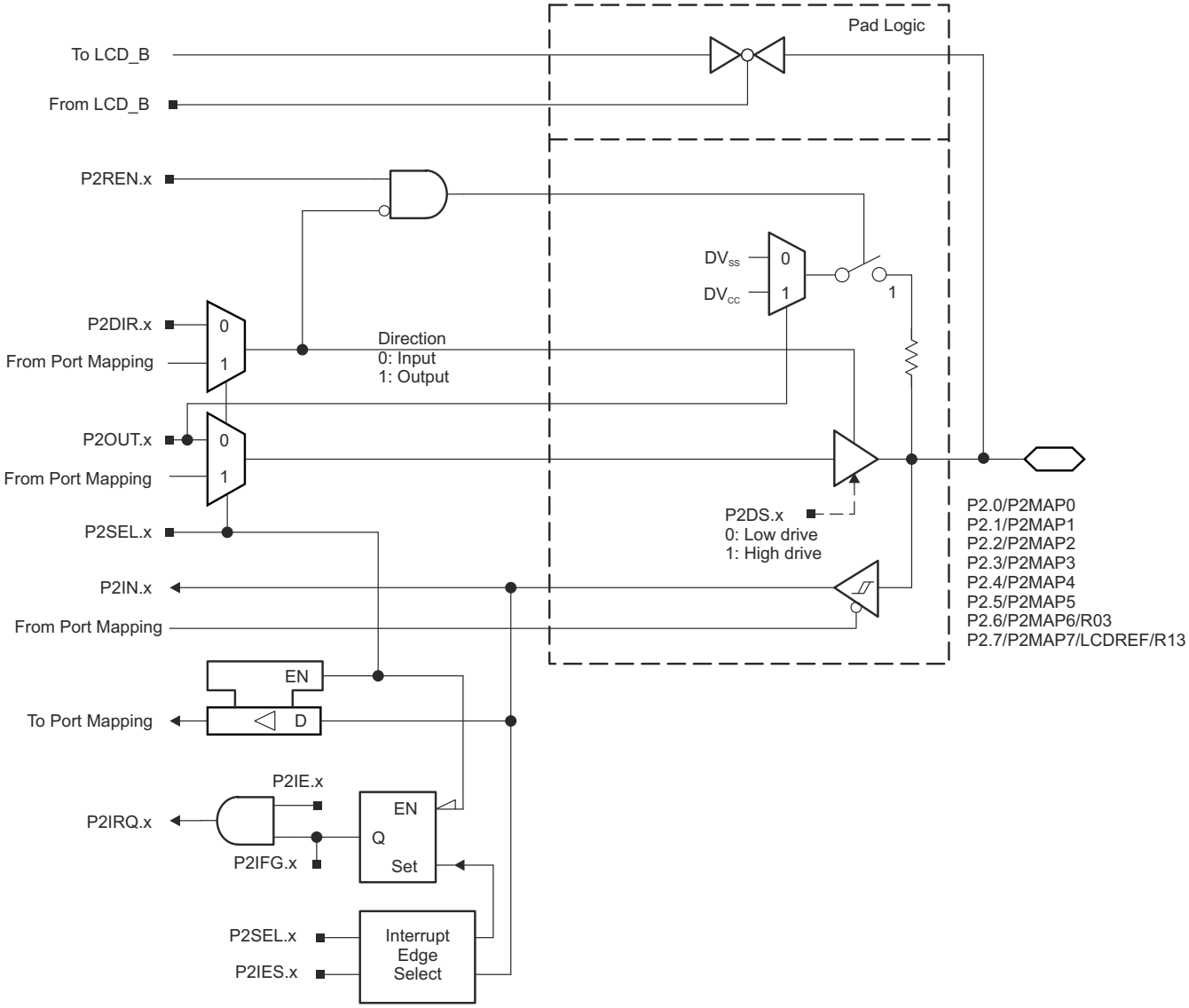

図 9-3. Port P2 (P2.0 to P2.7) Diagram

Copyright © 2021 Texas Instruments Incorporated

表 9-51. Port P2 (P2.0 to P2.7) Pin Functions

PIN NAME (P2.x)	x	FUNCTION	CONTROL BITS OR SIGNALS[1]		
			P2DIR.x	P2SEL.x	P2MAPx
P2.0/P2MAP0	0	P2.0 (I/O)	I: 0; O: 1	0	
		Mapped secondary digital function	X	1	≤ 19
P2.1/P2MAP1	1	P2.1 (I/O)	I: 0; O: 1	0	
		Mapped secondary digital function	X	1	≤ 19
P2.2/P2MAP2	2	P2.2 (I/O)	I: 0; O: 1	0	
		Mapped secondary digital function	X	1	≤ 19
P2.3/P2MAP3	3	P2.3 (I/O)	I: 0; O: 1	0	
		Mapped secondary digital function	X	1	≤ 19
P2.4/P2MAP4	4	P2.4 (I/O)	I: 0; O: 1	0	
		Mapped secondary digital function	X	1	≤ 19
P2.5/P2MAP5	5	P2.5 (I/O	I: 0; O: 1	0	
		Mapped secondary digital function	X	1	≤ 19
P2.6/P2MAP6/R03	6	P2.6 (I/O)	I: 0; O: 1	0	
		Mapped secondary digital function	X	1	≤ 19
		R03	X	1	= 31
P2.7/P2MAP7/ LCDREF/R13	7	P2.7 (I/O)	I: 0; O: 1	0	
		Mapped secondary digital function	X	1	≤ 19
		LCDREF/R13	X	1	= 31

9.13.3 Port P3 (P3.0 to P3.7) Input/Output With Schmitt Trigger

図 9-4 shows the pin diagram. 表 9-52 summarizes how to select the pin function.

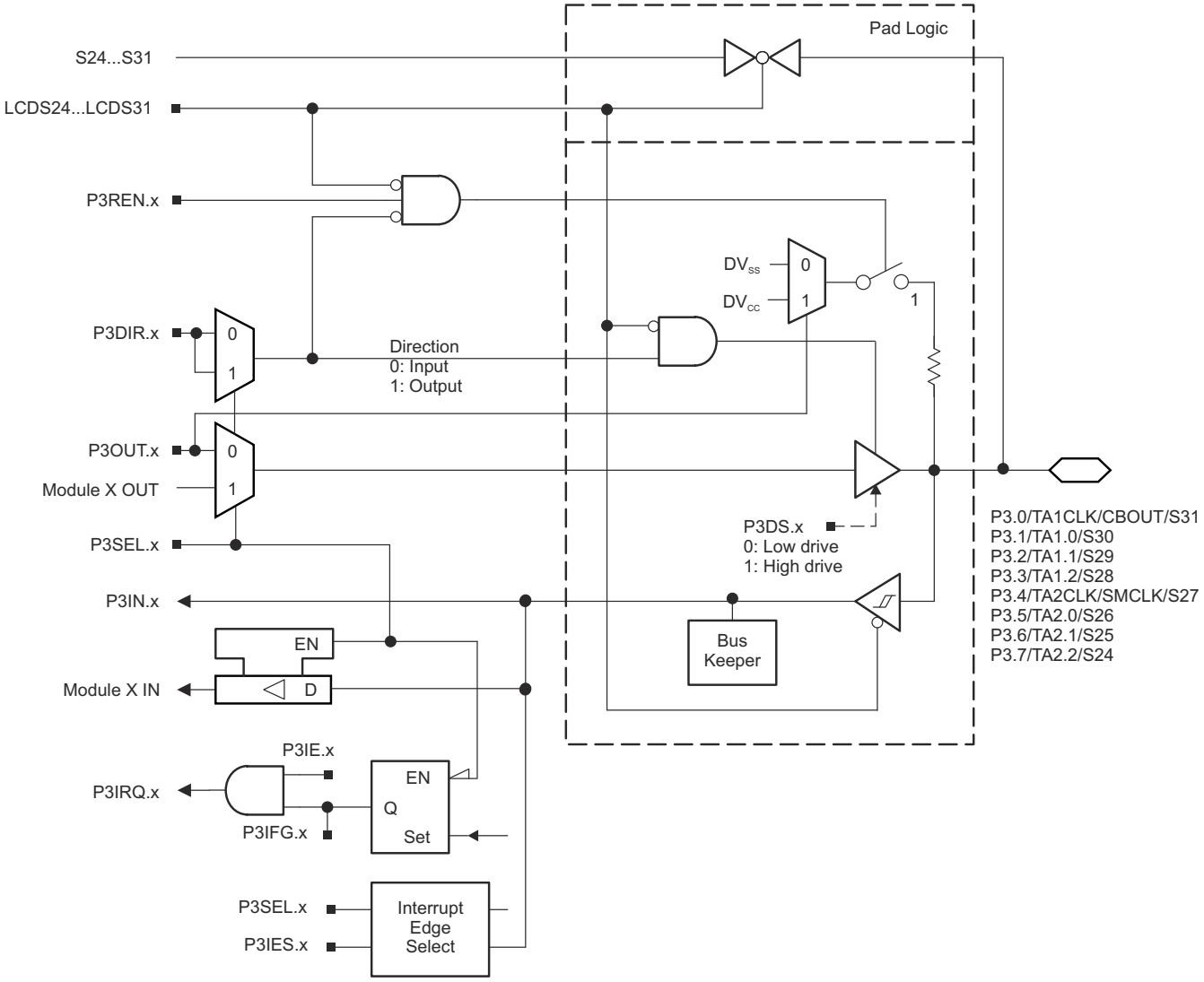

図 9-4. Port P3 (P3.0 to P3.7) Diagram

Copyright © 2021 Texas Instruments Incorporated

表 9-52. Port P3 (P3.0 to P3.7) Pin Functions

PIN NAME (P3.x)	x	FUNCTION	CONTROL BITS OR SIGNALS[1]		
			P3DIR.x	P3SEL.x	LCDS24...31
P3.0/TA1CLK/ CBOUT/S31	0	P3.0 (I/O)	I: 0; O: 1	0	0
		Timer TA1.TA1CLK	0	1	0
		CBOUT	1	1	0
		S31	X	X	1
P3.1/TA1.0/S30	1	P3.1 (I/O)	I: 0; O: 1	0	0
		Timer TA1.CCI0A capture input	0	1	0
		Timer TA1.0 output	1	1	0
		S30	X	X	1
P3.2/TA1.1/S29	2	P3.2 (I/O)	I: 0; O: 1	0	0
		Timer TA1.CCI1A capture input	0	1	0
		Timer TA1.1 output	1	1	0
		S29	X	X	1
P3.3/TA1.2/S28	3	P3.3 (I/O)	I: 0; O: 1	0	0
		Timer TA1.CCI2A capture input	0	1	0
		Timer TA1.2 output	1	1	0
		S28	X	X	1
P3.4/TA2CLK/ SMCLK/S27	4	P3.4 (I/O)	I: 0; O: 1	0	0
		Timer TA2.TA2CLK	0	1	0
		SMCLK	1	1	0
		S27	X	X	1
P3.5/TA2.0/S26	5	P3.5 (I/O)	I: 0; O: 1	0	0
		Timer TA2.CCI0A capture input	0	1	0
		Timer TA2.0 output	1	1	0
		S26	X	X	1
P3.6/TA2.1/S25	6	P3.6 (I/O)	I: 0; O: 1	0	0
		Timer TA2.CCI1A capture input	0	1	0
		Timer TA2.1 output	1	1	1
		S25	X	X	1
P3.7/TA2.2/S24	7	P3.7 (I/O)	I: 0; O: 1	0	0
		Timer TA2.CCI2A capture input	0	1	0
		Timer TA2.2 output	1	1	0
		S24	X	X	1

9.13.4 Port P4 (P4.0 to P4.7) Input/Output With Schmitt Trigger

図 9-5 shows the pin diagram. 表 9-53 summarizes how to select the pin function.

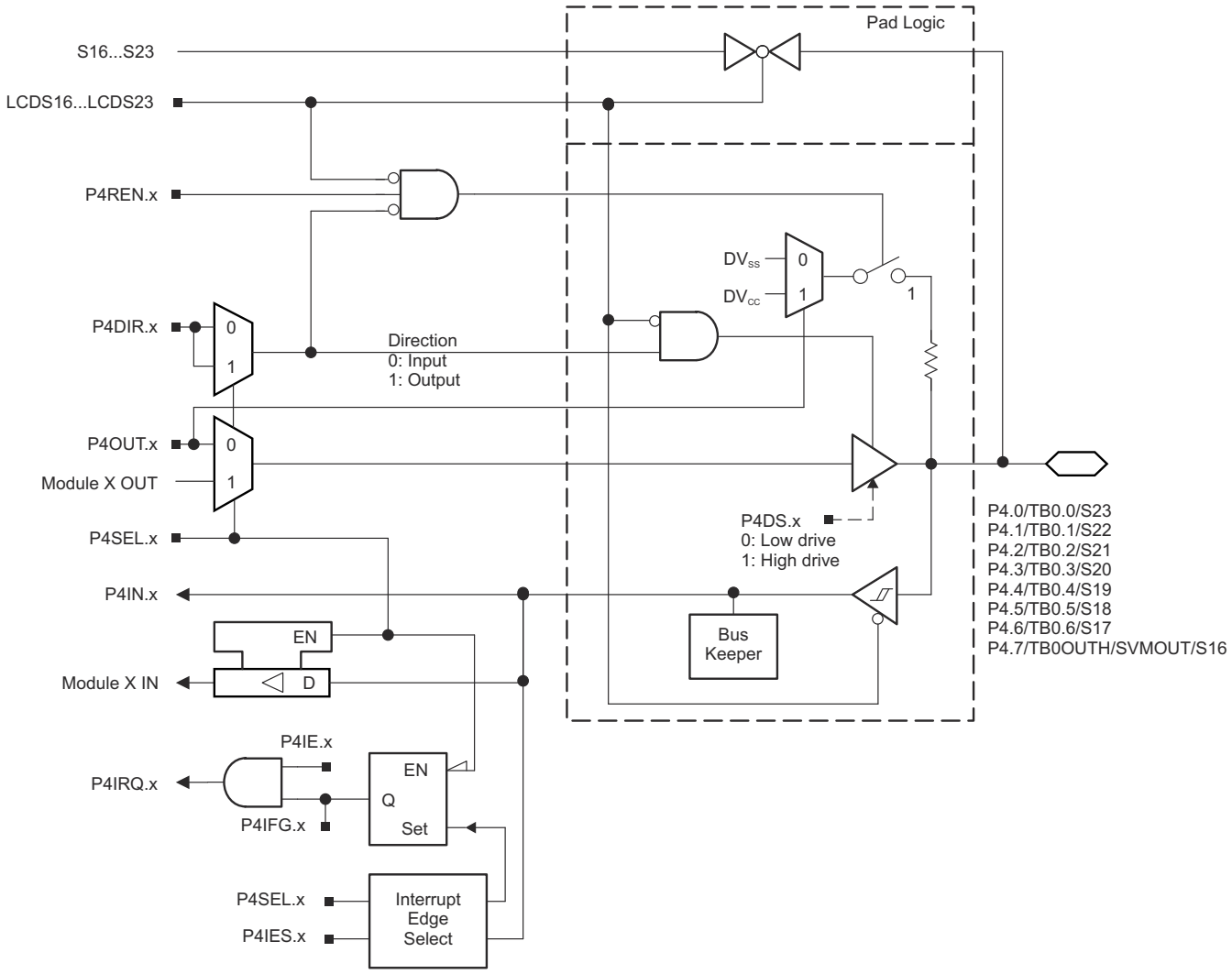

図 9-5. Port P4 (P4.0 to P4.7) Diagram

Copyright © 2021 Texas Instruments Incorporated

表 9-53. Port P4 (P4.0 to P4.7) Pin Functions

PIN NAME (P4.x)	x	FUNCTION	CONTROL BITS OR SIGNALS[1]		
			P4DIR.x	P4SEL.x	LCDS16...23
P4.0/TB0.0/S23	0	P4.0 (I/O)	I: 0; O: 1	0	0
		Timer TB0.CCI0A capture input	0	1	0
		Timer TB0.0 output[1]	1	1	0
		S23	X	X	1
P4.1/TB0.1/S22	1	P4.1 (I/O)	I: 0; O: 1	0	0
		Timer TB0.CCI1A capture input	0	1	0
		Timer TB0.1 output[1]	1	1	0
		S22	X	X	1
P4.2/TB0.2/S21	2	P4.2 (I/O)	I: 0; O: 1	0	0
		Timer TB0.CCI2A capture input	0	1	0
		Timer TB0.2 output[1]	1	1	0
		S21	X	X	1
P4.3/TB0.3/S20	3	P4.3 (I/O)	I: 0; O: 1	0	0
		Timer TB0.CCI3A capture input	0	1	0
		Timer TB0.3 output[1]	1	1	0
		S20	X	X	1
P4.4/TB0.4/S19	4	P4.4 (I/O)	I: 0; O: 1	0	0
		Timer TB0.CCI4A capture input	0	1	0
		Timer TB0.4 output[1]	1	1	0
		S19	X	X	1
P4.5/TB0.5/S18	5	P4.5 (I/O)	I: 0; O: 1	0	0
		Timer TB0.CCI5A capture input	0	1	0
		Timer TB0.5 output[1]	1	1	0
		S18	X	X	1
P4.6/TB0.6/S17	6	P4.6 (I/O)	I: 0; O: 1	0	0
		Timer TB0.CCI6A capture input	0	1	0
		Timer TB0.6 output[1]	1	1	0
		S17	X	X	1
P4.7/TB0OUTH/ SVMOUT/S16	7	P4.7 (I/O)	I: 0; O: 1	0	0
		Timer TB0.TB0OUTH	0	1	0
		SVMOUT	1	1	0
		S16	X	X	1

(1) Setting TB0OUTH causes all Timer_B configured outputs to be set to high impedance.

9.13.5 Port P5 (P5.0 and P5.1) Input/Output With Schmitt Trigger

図 9-6 shows the pin diagram. 表 9-54 summarizes how to select the pin function.

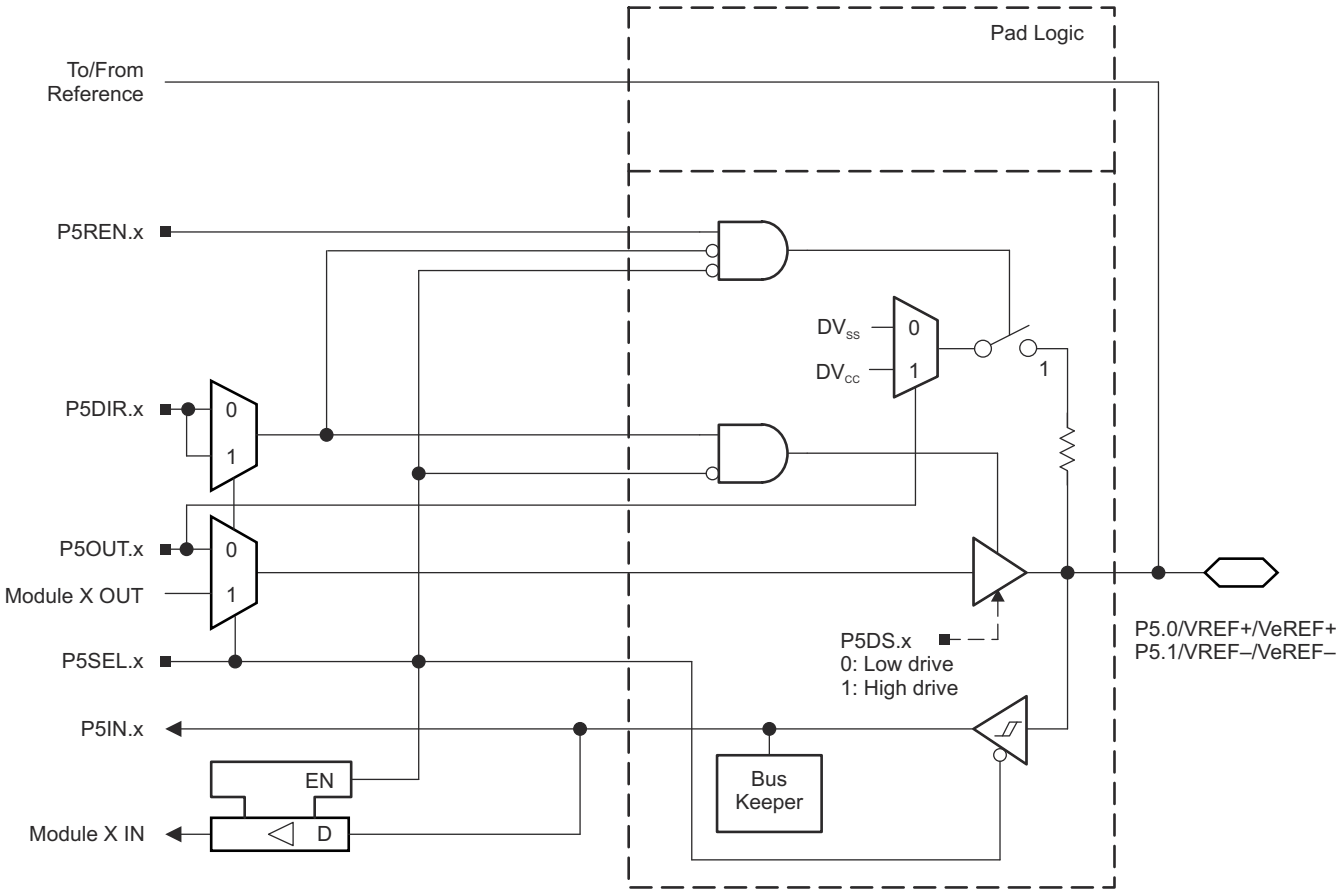

図 9-6. Port P5 (P5.0 and P5.1) Diagram

表 9-54. Port P5 (P5.0 and P5.1) Pin Functions

PIN NAME (P5.x)	x	FUNCTION	CONTROL BITS OR SIGNALS(1)		
			P5DIR.x	P5SEL.x	REFOUT
P5.0/VREF+/VeREF+	0	P5.0 (I/O)(2)	I: 0; O: 1	0	X
		VeREF+(3)	X	1	0
		VREF+(4)	X	1	1
P5.1/VREF-/VeREF-	1	P5.1 (I/O)(2)	I: 0; O: 1	0	X
		VeREF-(5)	X	1	0
		VREF-(6)	X	1	1

(1) X = Don't care
(2) Default condition
(3) Setting the P5SEL.0 bit disables the output driver and the input Schmitt trigger to prevent parasitic cross currents when applying analog signals. An external voltage can be applied to VeREF+ and used as the reference for the ADC12_A, Comparator_B, or DAC12_A.
(4) Setting the P5SEL.0 bit disables the output driver and the input Schmitt trigger to prevent parasitic cross currents when applying analog signals. The ADC12_A VREF+ reference is available at the pin.
(5) Setting the P5SEL.1 bit disables the output driver and the input Schmitt trigger to prevent parasitic cross currents when applying analog signals. An external voltage can be applied to VeREF- and used as the reference for the ADC12_A, Comparator_B, or DAC12_A.
(6) Setting the P5SEL.1 bit disables the output driver and the input Schmitt trigger to prevent parasitic cross currents when applying analog signals. The ADC12_A VREF- reference is available at the pin.

Copyright © 2021 Texas Instruments Incorporated

9.13.6 Port P5 (P5.2 to P5.7) Input/Output With Schmitt Trigger

図 9-7 shows the pin diagram. 表 9-55 summarizes how to select the pin function.

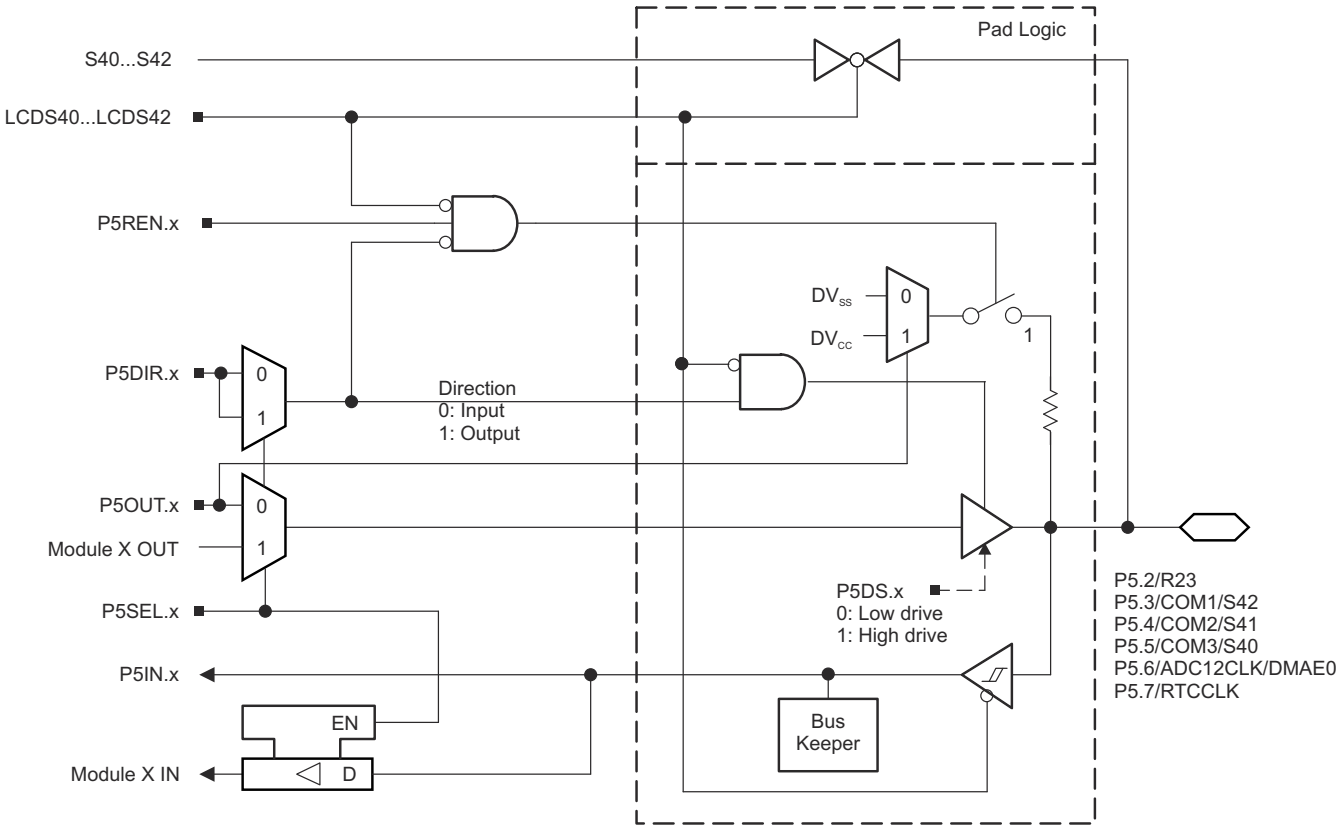

図 9-7. Port P5 (P5.2 to P5.7) Diagram

表 9-55. Port P5 (P5.2 to P5.7) Pin Functions

PIN NAME (P5.x)	x	FUNCTION	CONTROL BITS OR SIGNALS[(1)]		
			P5DIR.x	P5SEL.x	LCDS40...42
P5.2/R23	2	P5.2 (I/O)	I: 0; O: 1	0	na
		R23	X	1	na
P5.3/COM1/S42	3	P5.3 (I/O)	I: 0; O: 1	0	0
		COM1	X	1	X
		S42	X	0	1
P5.4/COM2/S41	4	P5.4 (I/O)	I: 0; O: 1	0	0
		COM2	X	1	X
		S41	X	0	1
P5.5/COM3/S40	5	P5.5 (I/O)	I: 0; O: 1	0	0
		COM3	X	1	X
		S40	X	0	1
P5.6/ADC12CLK/DMAE0	6	P5.6 (I/O)	I: 0; O: 1	0	na
		ADC12CLK	1	1	na
		DMAE0	0	1	na
P5.7/RTCCLK	7	P5.7 (I/O)	I: 0; O: 1	0	na
		RTCCLK	1	1	na

Copyright © 2021 Texas Instruments Incorporated

9.13.7 Port P6 (P6.0 to P6.7) Input/Output With Schmitt Trigger

図 9-8 shows the pin diagram. 表 9-56 summarizes how to select the pin function.

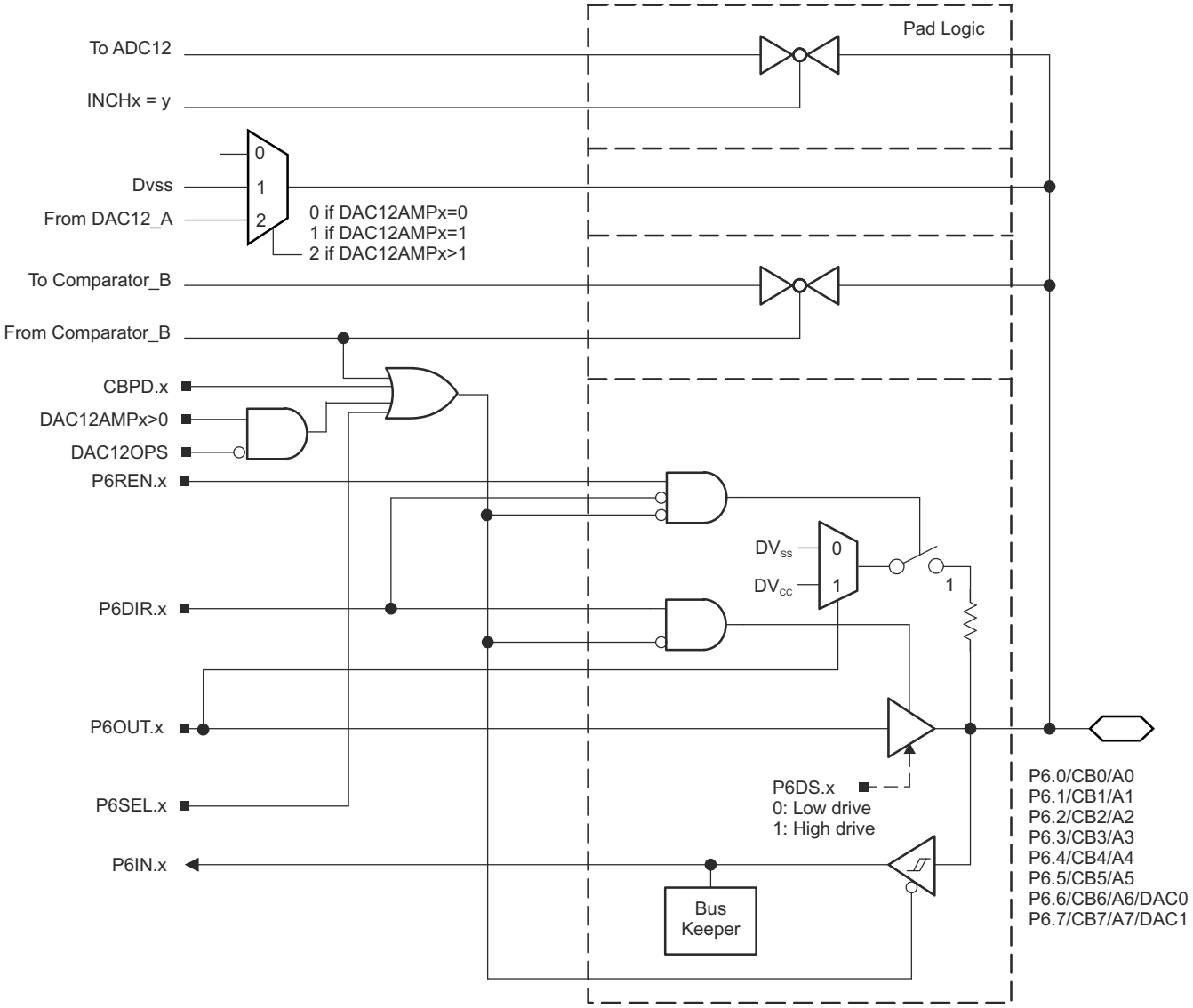

図 9-8. Port P6 (P6.0 to P6.7) Diagram

Copyright © 2021 Texas Instruments Incorporated

表 9-56. Port P6 (P6.0 to P6.7) Pin Functions

PIN NAME (P6.x)	x	FUNCTION	CONTROL BITS OR SIGNALS[1]				
			P6DIR.x	P6SEL.x	CBPD.x	DAC12OPS	DAC12AMPx
P6.0/CB0/A0	0	P6.0 (I/O)	I: 0; O: 1	0	0	n/a	n/a
		CB0	X	X	1	n/a	n/a
		A0[1] [2]	X	1	X	n/a	n/a
P6.1/CB1/A1	1	P6.1 (I/O)	I: 0; O: 1	0	0	n/a	n/a
		CB1	X	X	1	n/a	n/a
		A1[1] [2]	X	1	X	n/a	n/a
P6.2/CB2/A2	2	P6.2 (I/O)	I: 0; O: 1	0	0	n/a	n/a
		CB2	X	X	1	n/a	n/a
		A2[1] [2]	X	1	X	n/a	n/a
P6.3/CB3/A3	3	P6.3 (I/O)	I: 0; O: 1	0	0	n/a	n/a
		CB3	X	X	1	n/a	n/a
		A3[1] [2]	X	1	X	n/a	n/a
P6.4/CB4/A4	4	P6.4 (I/O)	I: 0; O: 1	0	0	n/a	n/a
		CB4	X	X	1	n/a	n/a
		A4[1] [2]	X	1	X	n/a	n/a
P6.5/CB5/A5	5	P6.5 (I/O)	I: 0; O: 1	0	0	n/a	n/a
		CB5	X	X	1	n/a	n/a
		A5 [1] [2]	X	1	X	n/a	n/a
P6.6/CB6/A6/DAC0	6	P6.6 (I/O)	I: 0; O: 1	0	0	X	0
		CB6	X	X	1	X	0
		A6[1] [2]	X	1	X	X	0
		DAC0	X	X	X	0	>1
P6.7/CB7/A7/DAC1	7	P6.7 (I/O)	I: 0; O: 1	0	0	X	0
		CB7	X	X	1	X	0
		A7[1] [2]	X	1	X	X	0
		DAC1	X	X	X	0	>1

(1) Setting the P6SEL.x bit disables the output driver and the input Schmitt trigger to prevent parasitic cross currents when applying analog signals.
(2) The ADC12_A channel Ax is connected internally to AV_{SS} if not selected by the respective INCHx bits.

9.13.8 Port P7 (P7.2) Input/Output With Schmitt Trigger

図 9-9 shows the pin diagram. 表 9-57 summarizes how to select the pin function.

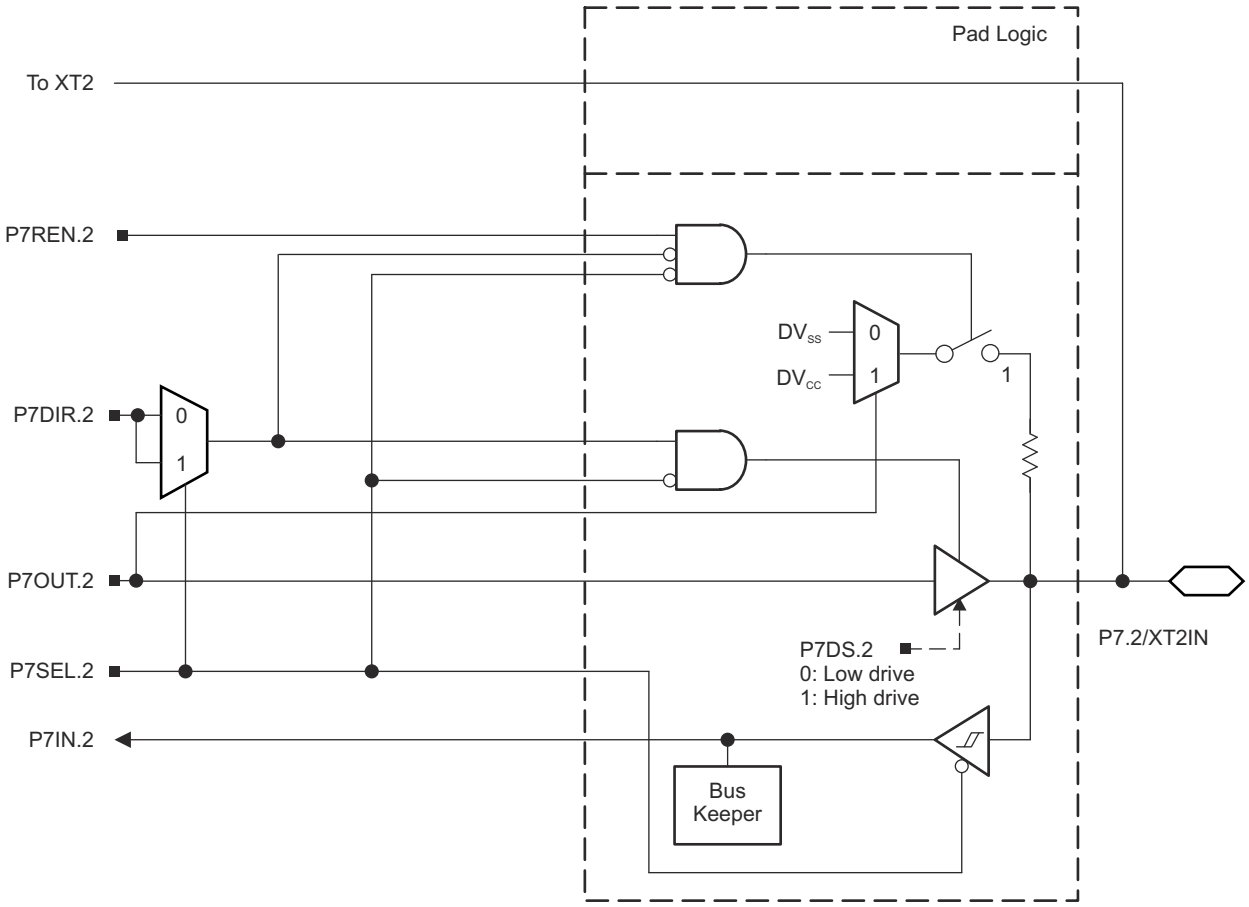

図 9-9. Port P7 (P7.2) Diagram

Copyright © 2021 Texas Instruments Incorporated

9.13.9 Port P7 (P7.3) Input/Output With Schmitt Trigger

図 9-10 shows the pin diagram. 表 9-57 summarizes how to select the pin function.

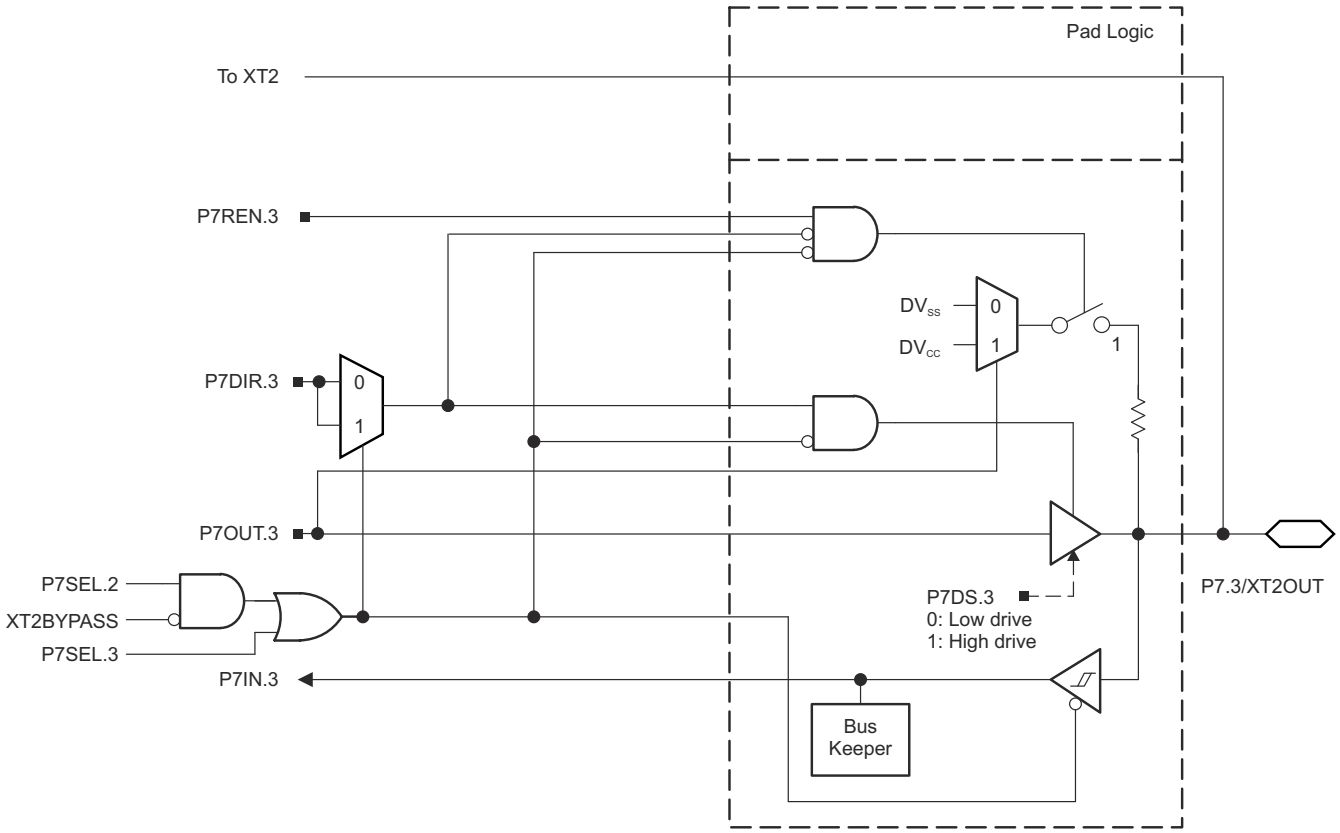

図 9-10. Port P7 (P7.3) Diagram

表 9-57. Port P7 (P7.2 and P7.3) Pin Functions

PIN NAME (P5.x)	x	FUNCTION	CONTROL BITS OR SIGNALS[(1)]			
			P7DIR.x	P7SEL.2	P7SEL.3	XT2BYPASS
P7.2/XT2IN	2	P7.2 (I/O)	I: 0; O: 1	0	X	X
		XT2IN crystal mode[(1)]	X	1	X	0
		XT2IN bypass mode[(1)]	X	1	X	1
P7.3/XT2OUT	3	P7.3 (I/O)	I: 0; O: 1	0	0	X
		XT2OUT crystal mode[(2)]	X	1	X	0
		P7.3 (I/O)[(2)]	X	1	0	1

(1) Setting P7SEL.2 causes the general-purpose I/O to be disabled. Pending the setting of XT2BYPASS, P7.2 is configured for crystal mode or bypass mode.
(2) Setting P7SEL.2 causes the general-purpose I/O to be disabled in crystal mode. When using bypass mode, P7.3 can be used as general-purpose I/O.

9.13.10 Port P7 (P7.4 to P7.7) Input/Output With Schmitt Trigger

図 9-11 shows the pin diagram. 表 9-58 summarizes how to select the pin function.

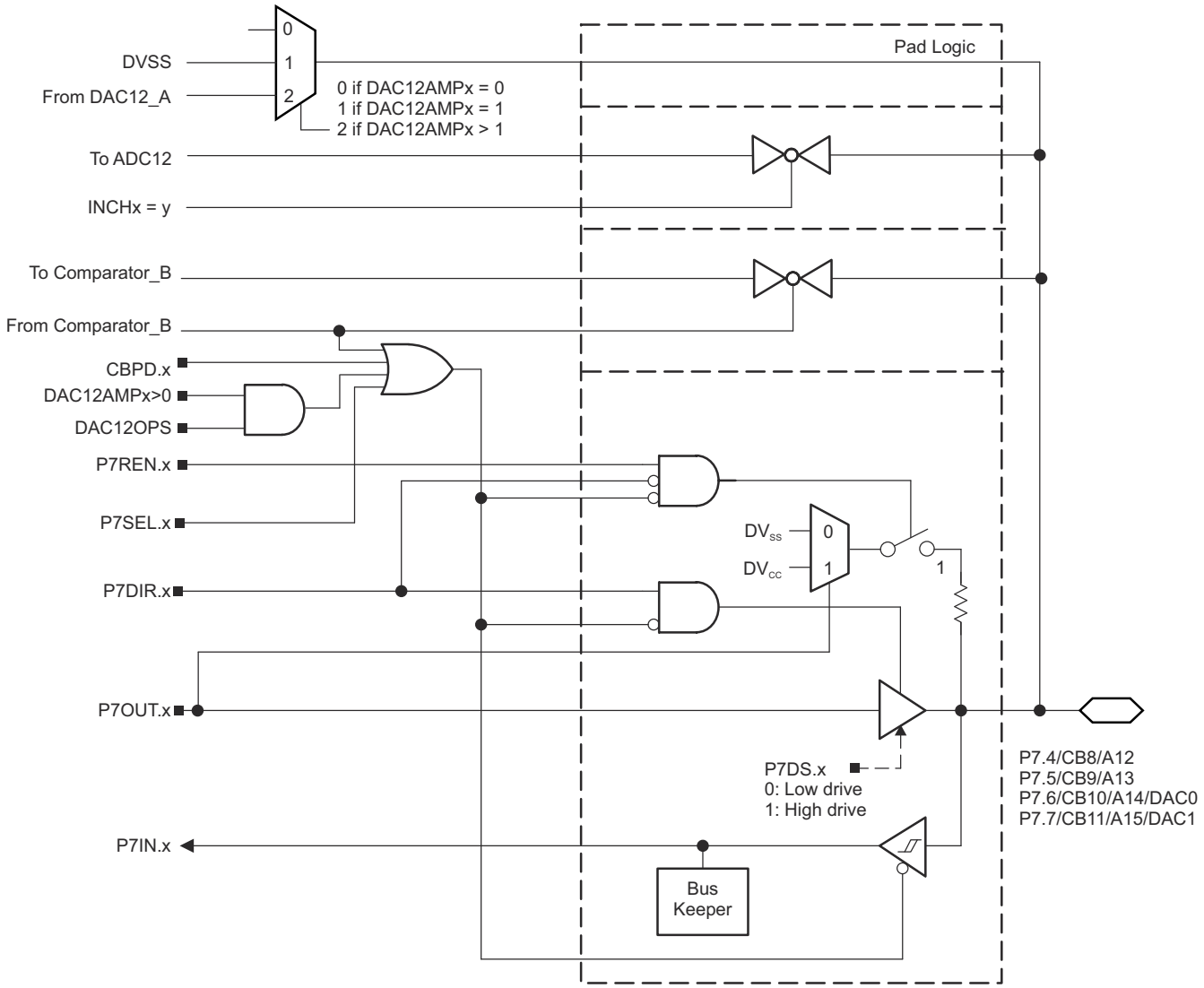

図 9-11. Port P7 (P7.4 to P7.7) Diagram

Copyright © 2021 Texas Instruments Incorporated

表 9-58. Port P7 (P7.4 to P7.7) Pin Functions

PIN NAME (P7.x)	x	FUNCTION	CONTROL BITS OR SIGNALS[1]				
			P7DIR.x	P7SEL.x	CBPD.x	DAC12OPS	DAC12AMPx
P7.4/CB8/A12	4	P7.4 (I/O)	I: 0; O: 1	0	0	n/a	n/a
		Comparator_B input CB8	X	X	1	n/a	n/a
		A12[1] [2]	X	1	X	n/a	n/a
P7.5/CB9/A13	5	P7.5 (I/O)	I: 0; O: 1	0	0	n/a	n/a
		Comparator_B input CB9	X	X	1	n/a	n/a
		A13[1] [2]	X	1	X	n/a	n/a
P7.6/CB10/A14/DAC0	6	P7.6 (I/O)	I: 0; O: 1	0	0	X	0
		Comparator_B input CB10	X	X	1	X	0
		A14[1] [2]	X	1	X	X	0
		DAC12_A output DAC0	X	X	X	1	>1
P7.7/CB11/A15/DAC1	7	P7.7 (I/O)	I: 0; O: 1	0	0	X	0
		Comparator_B input CB11	X	X	1	X	0
		A15[1] [2]	X	1	X	X	0
		DAC12_A output DAC1	X	X	X	1	>1

(1) Setting the P7SEL.x bit disables the output driver and the input Schmitt trigger to prevent parasitic cross currents when applying analog signals.
(2) The ADC12_A channel Ax is connected internally to AV_{SS} if not selected by the respective INCHx bits.

9.13.11 Port P8 (P8.0 to P8.7) Input/Output With Schmitt Trigger

図 9-12 shows the pin diagram. 表 9-59 summarizes how to select the pin function.

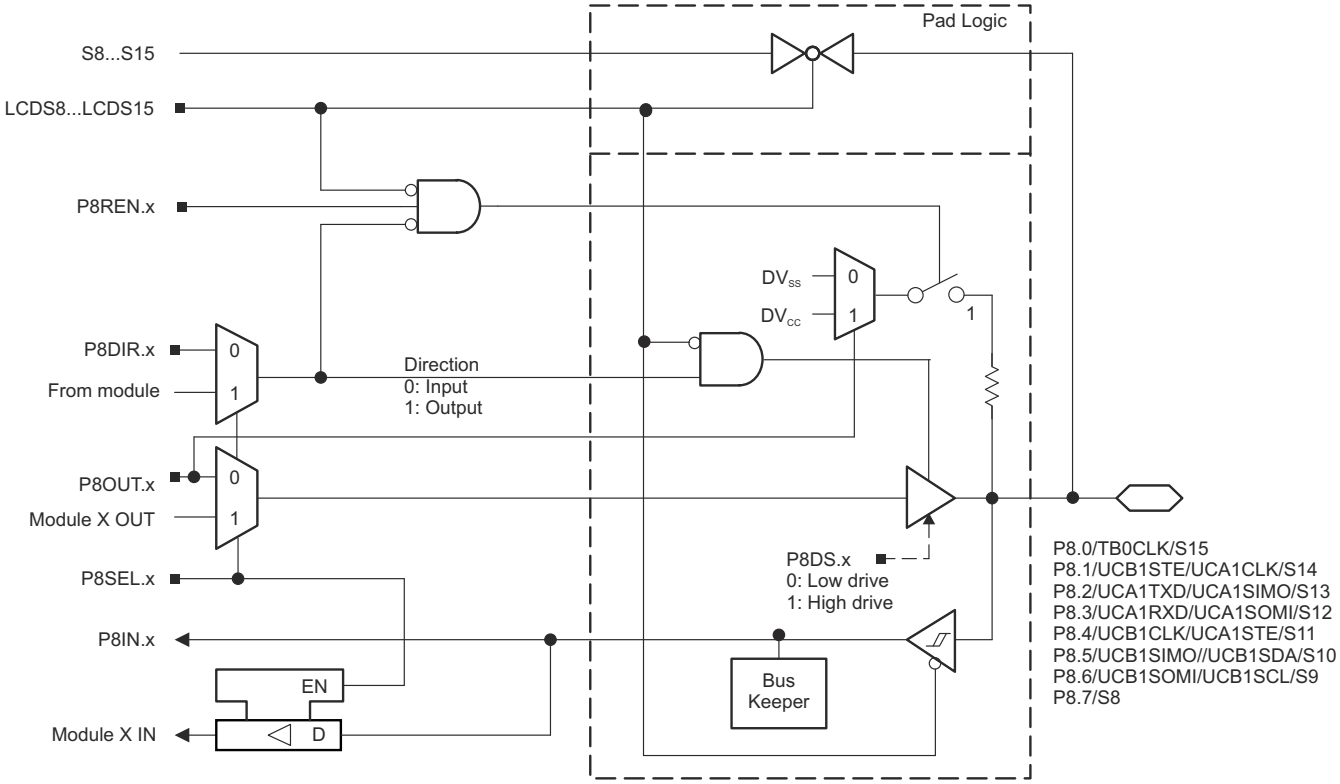

図 9-12. Port P8 (P8.0 to P8.7) Diagram

Copyright © 2021 Texas Instruments Incorporated

表 9-59. Port P8 (P8.0 to P8.7) Pin Functions

PIN NAME (P9.x)	x	FUNCTION	CONTROL BITS OR SIGNALS[1]		
			P8DIR.x	P8SEL.x	LCDS8...16
P8.0/TB0CLK/S15	0	P8.0 (I/O)	I: 0; O: 1	0	0
		Timer TB0.TB0CLK clock input	0	1	0
		S15	X	X	1
P8.1/UCB1STE/UCA1CLK/S14	1	P8.1 (I/O)	I: 0; O: 1	0	0
		UCB1STE/UCA1CLK	X	1	0
		S14	X	X	1
P8.2/UCA1TXD/UCA1SIMO/S13	2	P8.2 (I/O)	I: 0; O: 1	0	0
		UCA1TXD/UCA1SIMO	X	1	0
		S13	X	X	1
P8.3/UCA1RXD/UCA1SOMI/S12	3	P8.3 (I/O)	I: 0; O: 1	0	0
		UCA1RXD/UCA1SOMI	X	1	0
		S12	X	X	1
P8.4/UCB1CLK/UCA1STE/S11	4	P8.4 (I/O)	I: 0; O: 1	0	0
		UCB1CLK/UCA1STE	X	1	0
		S11	X	X	1
P8.5/UCB1SIMO/UCB1SDA/S10	5	P8.5 (I/O)	I: 0; O: 1	0	0
		UCB1SIMO/UCB1SDA	X	1	0
		S10	X	X	1
P8.6/UCB1SOMI/UCB1SCL/S9	6	P8.6 (I/O)	I: 0; O: 1	0	0
		UCB1SOMI/UCB1SCL	X	1	0
		S9	X	X	1
P8.7/S8	7	P8.7 (I/O)	I: 0; O: 1	0	0
		S8	X	X	1

Copyright © 2021 Texas Instruments Incorporated

9.13.12 Port P9 (P9.0 to P9.7) Input/Output With Schmitt Trigger

図 9-13 shows the pin diagram. 表 9-60 summarizes how to select the pin function.

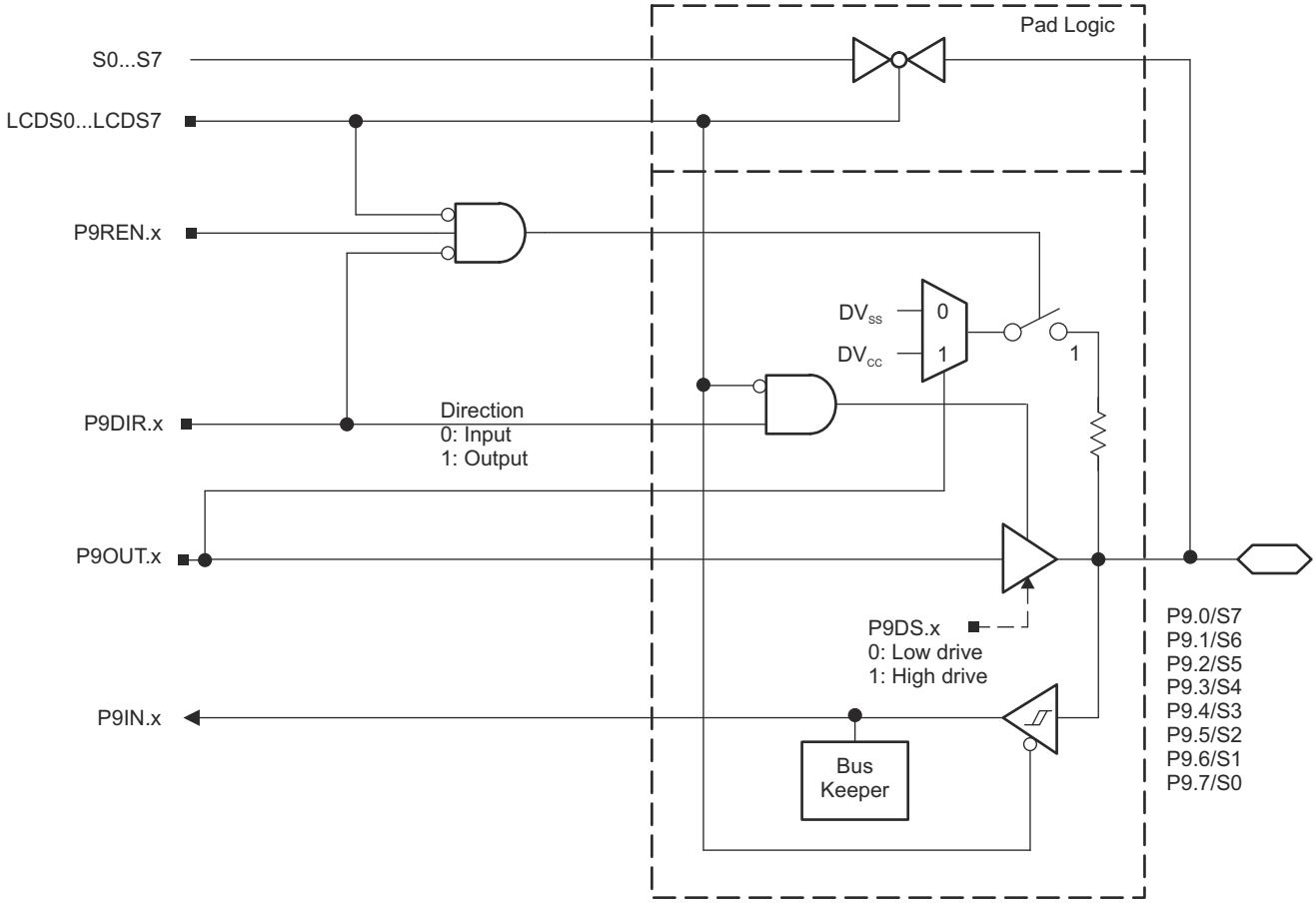

図 9-13. Port P9 (P9.0 to P9.7) Diagram

Copyright © 2021 Texas Instruments Incorporated

表 9-60. Port P9 (P9.0 to P9.7) Pin Functions

PIN NAME (P9.x)	x	FUNCTION	CONTROL BITS OR SIGNALS[1]		
			P9DIR.x	P9SEL.x	LCDS0...7
P9.0/S7	0	P9.0 (I/O)	I: 0; O: 1	0	0
		S7	X	X	1
P9.1/S6	1	P9.1 (I/O)	I: 0; O: 1	0	0
		S6	X	X	1
P9.2/S5	2	P9.2 (I/O)	I: 0; O: 1	0	0
		S5	X	X	1
P9.3/S4	3	P9.3 (I/O)	I: 0; O: 1	0	0
		S4	X	X	1
P9.4/S3	4	P9.4 (I/O)	I: 0; O: 1	0	0
		S3	X	X	1
P9.5/S2	5	P9.5 (I/O)	I: 0; O: 1	0	0
		S2	X	X	1
P9.6/S1	6	P9.6 (I/O)	I: 0; O: 1	0	0
		S1	X	X	1
P9.7/S0	7	P9.7 (I/O)	I: 0; O: 1	0	0
		S0	X	X	1

9.13.13 Port PU (PU.0 and PU.1) Ports

図 9-14 shows the pin diagram. 表 9-61 summarizes how to select the pin function.

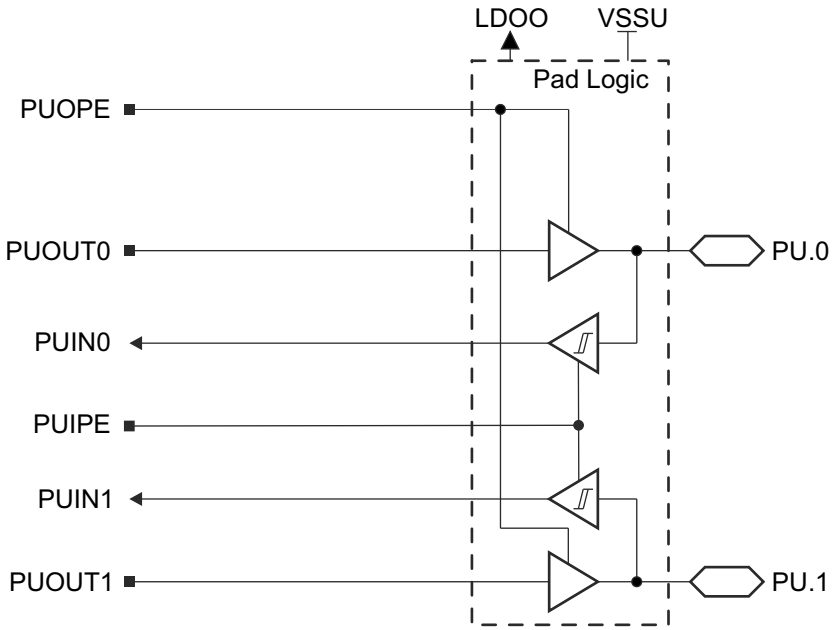

図 9-14. Port PU (PU.0 and PU.1) Diagram

表 9-61. Port PU.0 and PU.1 Functions

PUIPE(1)	PUOPE	PUOUT1	PUOUT0	PU.1	PU.0	PORT U FUNCTION
0	1	0	0	Output low	Output low	Outputs enabled
0	1	0	1	Output low	Output high	Outputs enabled
0	1	1	0	Output high	Output low	Outputs enabled
0	1	1	1	Output high	Output high	Outputs enabled
1	0	X	X	Input enabled	Input enabled	Inputs enabled
0	0	X	X	Hi-Z	Hi-Z	Outputs and inputs disabled

(1) PU.1 and PU.0 inputs and outputs are supplied from LDOO. LDOO can be generated by the device using the integrated 3.3-V LDO when enabled. LDOO can also be supplied externally when the 3.3-V LDO is not being used and is disabled.

9.13.14 Port PJ (PJ.0) JTAG Pin TDO, Input/Output With Schmitt Trigger or Output

図 9-15 shows the pin diagram. 表 9-62 summarizes how to select the pin function.

Copyright © 2021 Texas Instruments Incorporated

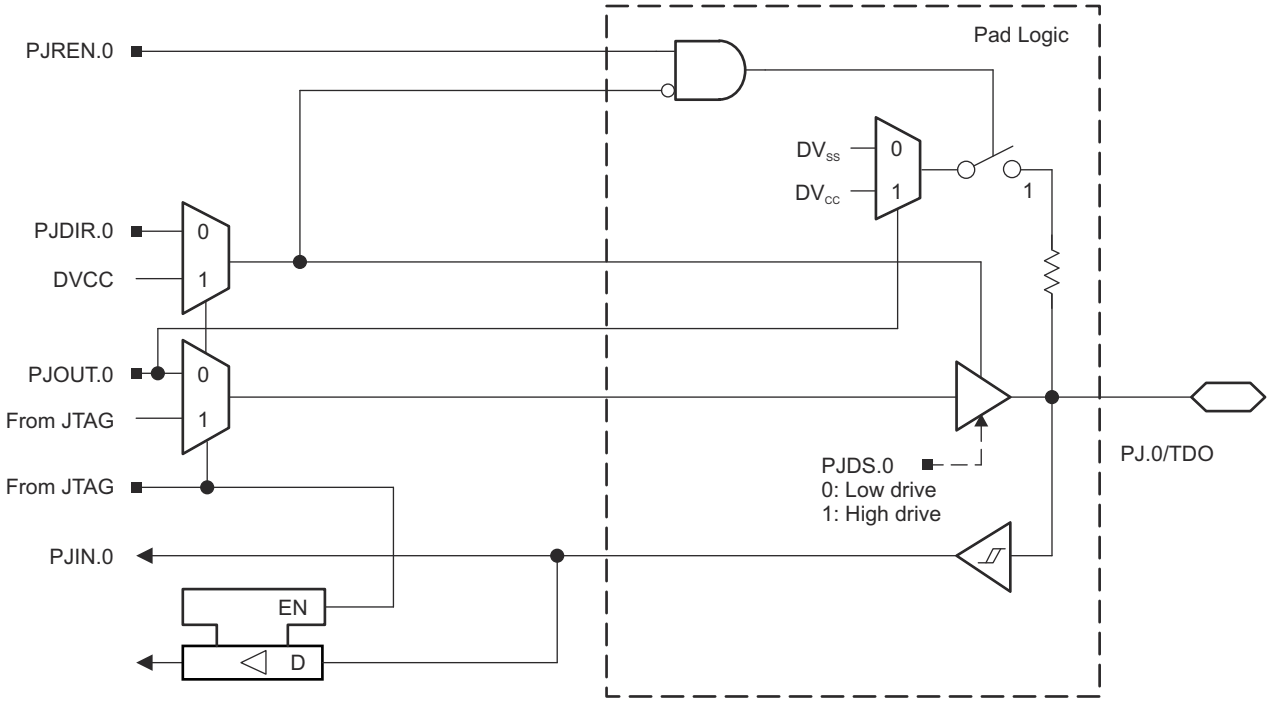

図 9-15. Port J (PJ.0) Diagram

9.13.15 Port PJ (PJ.1 to PJ.3) JTAG Pins TMS, TCK, TDI/TCLK, Input/Output With Schmitt Trigger or Output

図 9-16 shows the pin diagram. 表 9-62 summarizes how to select the pin function.

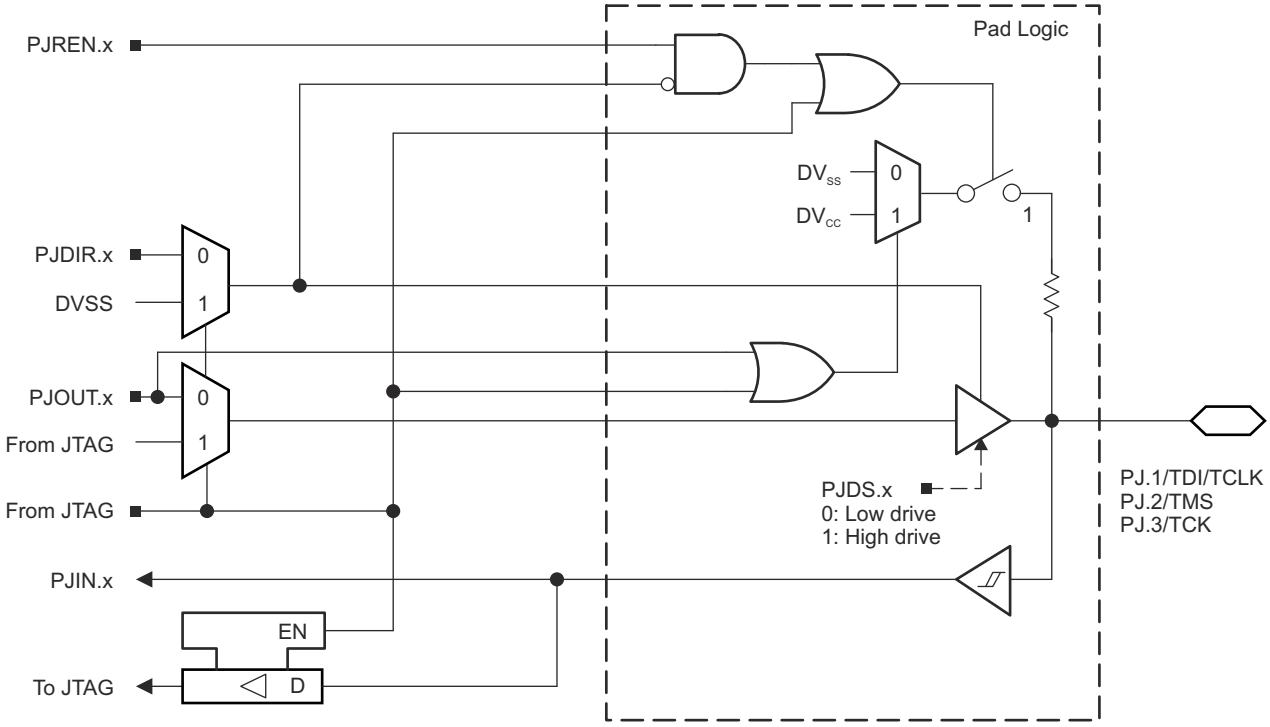

図 9-16. Port PJ (PJ.1 to PJ.3) Diagram

表 9-62. Port PJ (PJ.0 to PJ.3) Pin Functions

PIN NAME (PJ.x)	x	FUNCTION	CONTROL BITS OR SIGNALS[(1)]
			PJDIR.x
PJ.0/TDO	0	PJ.0 (I/O)[(1)]	I: 0; O: 1
		TDO[(2)]	X
PJ.1/TDI/TCLK	1	PJ.1 (I/O)[(1)]	I: 0; O: 1
		TDI/TCLK[(2) (3)]	X
PJ.2/TMS	2	PJ.2 (I/O)[(1)]	I: 0; O: 1
		TMS[(2) (3)]	X
PJ.3/TCK	3	PJ.3 (I/O)[(1)]	I: 0; O: 1
		TCK[(2) (3)]	X

(1) Default condition
(2) The pin direction is controlled by the JTAG module.
(3) In JTAG mode, pullups are activated automatically on TMS, TCK, and TDI/TCLK. PJREN.x are don't care.

Copyright © 2021 Texas Instruments Incorporated

9.14 Device Descriptors

表 9-63 list the contents of the device descriptor tag-length-value (TLV) structure.

表 9-63. MSP430F643x Device Descriptor Table

DESCRIPTION[1]		ADDRESS	SIZE (bytes)	VALUE			
				F6438	F6436	F6435	F6433
Info Block	Info length	01A00h	1	06h	06h	06h	06h
	CRC length	01A01h	1	06h	06h	06h	06h
	CRC value	01A02h	2	Per unit	Per unit	Per unit	Per unit
	Device ID	01A04h	2	8124h	8122h	8121h	811Fh
	Hardware revision	01A06h	1	Per unit	Per unit	Per unit	Per unit
	Firmware revision	01A07h	1	Per unit	Per unit	Per unit	Per unit
Die Record	Die record tag	01A08h	1	08h	08h	08h	08h
	Die record length	01A09h	1	0Ah	0Ah	0Ah	0Ah
	Lot/wafer ID	01A0Ah	4	Per unit	Per unit	Per unit	Per unit
	Die X position	01A0Eh	2	Per unit	Per unit	Per unit	Per unit
	Die Y position	01A10h	2	Per unit	Per unit	Per unit	Per unit
	Test results	01A12h	2	Per unit	Per unit	Per unit	Per unit
ADC12 Calibration	ADC12 calibration tag	01A14h	1	11h	11h	11h	11h
	ADC12 calibration length	01A15h	1	10h	10h	10h	10h
	ADC gain factor	01A16h	2	Per unit	Per unit	Per unit	Per unit
	ADC offset	01A18h	2	Per unit	Per unit	Per unit	Per unit
	ADC 1.5-V reference Temperature sensor 30°C	01A1Ah	2	Per unit	Per unit	Per unit	Per unit
	ADC 1.5-V reference Temperature sensor 85°C	01A1Ch	2	Per unit	Per unit	Per unit	Per unit
	ADC 2.0-V reference Temperature sensor 30°C	01A1Eh	2	Per unit	Per unit	Per unit	Per unit
	ADC 2.0-V reference Temperature sensor 85°C	01A20h	2	Per unit	Per unit	Per unit	Per unit
	ADC 2.5-V reference Temperature sensor 30°C	01A22h	2	Per unit	Per unit	Per unit	Per unit
	ADC 2.5-V reference Temperature sensor 85°C	01A24h	2	Per unit	Per unit	Per unit	Per unit

(1) NA = Not applicable

10 Device and Documentation Support

10.1 Getting Started and Next Steps

For more information on the MSP430™ family of devices and the tools and libraries that are available to help with your development, visit the MSP430 ultra-low-power sensing & measurement MCUs overview.

10.2 Device Nomenclature

To designate the stages in the product development cycle, TI assigns prefixes to the part numbers of all MSP MCU devices. Each MSP MCU commercial family member has one of two prefixes: MSP or XMS. These prefixes represent evolutionary stages of product development from engineering prototypes (XMS) through fully qualified production devices (MSP).

XMS – Experimental device that is not necessarily representative of the final device's electrical specifications

MSP – Fully qualified production device

XMS devices are shipped against the following disclaimer:

"Developmental product is intended for internal evaluation purposes."

MSP devices have been characterized fully, and the quality and reliability of the device have been demonstrated fully. TI's standard warranty applies.

Predictions show that prototype devices (XMS) have a greater failure rate than the standard production devices. TI recommends that these devices not be used in any production system because their expected end-use failure rate still is undefined. Only qualified production devices are to be used.

TI device nomenclature also includes a suffix with the device family name. This suffix indicates the temperature range, package type, and distribution format. 図 10-1 provides a legend for reading the complete device name.

Copyright © 2021 Texas Instruments Incorporated

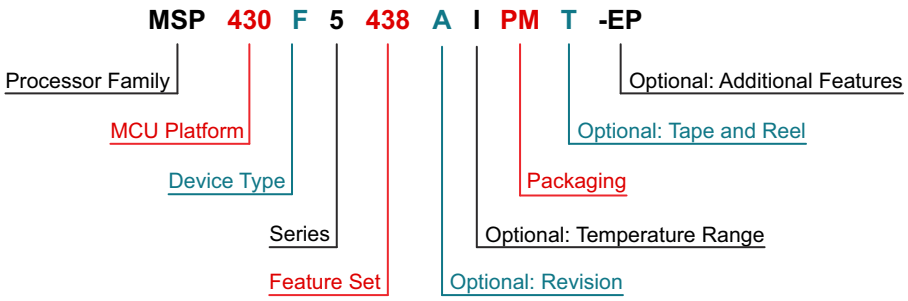

Processor Family	CC = Embedded RF Radio MSP = Mixed-Signal Processor XMS = Experimental Silicon PMS = Prototype Device	
MCU Platform	430 = MSP430 low-power microcontroller platform	
Device Type	**Memory Type** C = ROM F = Flash FR = FRAM G = Flash L = No nonvolatile memory	**Specialized Application** AFE = Analog front end BQ = Contactless power CG = ROM medical FE = Flash energy meter FG = Flash medical FW = Flash electronic flow meter
Series	1 = Up to 8 MHz 2 = Up to 16 MHz 3 = Legacy 4 = Up to 16 MHz with LCD driver	5 = Up to 25 MHz 6 = Up to 25 MHz with LCD driver 0 = Low-voltage series
Feature Set	Various levels of integration within a series	
Optional: Revision	Updated version of the base part number	
Optional: Temperature Range	S = 0°C to 50°C C = 0°C to 70°C I = –40°C to 85°C T = –40°C to 105°C	
Packaging	http://www.ti.com/packaging	
Optional: Tape and Reel	T = Small reel R = Large reel No markings = Tube or tray	
Optional: Additional Features	-EP = Enhanced product (–40°C to 105°C) -HT = Extreme temperature parts (–55°C to 150°C) -Q1 = Automotive Q100 qualified	

図 10-1. Device Nomenclature

10.3 Tools and Software

All MSP microcontrollers are supported by a wide variety of software and hardware development tools. Tools are available from TI and various third parties. See them all at MSP430 ultra-low-power MCUs – Design & development.

表 10-1 lists the debug features of the MSP430F643x MCUs. See the Code Composer Studio™ IDE for MSP430™ MCUs User's Guide for details on the available features.

表 10-1. Hardware Debug Features

MSP430 ARCHITECTURE	4-WIRE JTAG	2-WIRE JTAG	BREAK-POINTS (N)	RANGE BREAK-POINTS	CLOCK CONTROL	STATE SEQUENCER	TRACE BUFFER	LPMx.5 DEBUGGING SUPPORT
MSP430Xv2	Yes	Yes	8	Yes	Yes	Yes	Yes	No

Design Kits and Evaluation Modules

MSP-TS430PZ100C - 100-pin Target Development Board for MSP430F5x and MSP430F6x MCUs

The MSP-TS430PZ100USB is a stand-alone 100-pin ZIF socket target board used to program and debug the MSP430 MCU in-system through the JTAG interface or the Spy Bi-Wire (2-wire JTAG) protocol.

100-pin Target Development Board and MSP-FET Programmer Bundle for MSP430F5x and MSP430F6x MCUs

The MSP-FET is a powerful flash emulation tool to quickly begin application development on the MSP430 MCU. It includes USB debugging interface used to program and debug the MSP430 in-system through the JTAG interface or the pin saving Spy Bi-Wire (2-wire JTAG) protocol. The flash memory can be erased and programmed in seconds with only a few keystrokes, and because the MSP430 flash is ultra-low power, no external power supply is required.

Software

MSP430Ware™ Software

MSP430Ware software is a collection of code examples, data sheets, and other design resources for all MSP430 devices delivered in a convenient package. In addition to providing a complete collection of existing MSP430 design resources, MSP430Ware software also includes a high-level API called MSP430 Driver Library. This library makes it easy to program MSP430 hardware. MSP430Ware software is available as a component of CCS or as a stand-alone package.

MSP430F563x, MSP430F663x Code Examples

C code examples are available for every MSP device that configures each of the integrated peripherals for various application needs.

MSP Driver Library

Driver Library's abstracted API keeps you above the bits and bytes of the MSP430 hardware by providing easy-to-use function calls. Thorough documentation is delivered through a helpful API Guide, which includes details on each function call and the recognized parameters. Developers can use Driver Library functions to write complete projects with minimal overhead.

MSP EnergyTrace™ Technology

EnergyTrace technology for MSP430 microcontrollers is an energy-based code analysis tool that measures and displays the application's energy profile and helps to optimize it for ultra-low-power consumption.

Copyright © 2021 Texas Instruments Incorporated

ULP (Ultra-Low Power) Advisor

ULP Advisor™ software is a tool for guiding developers to write more efficient code to fully utilize the unique ultra-low power features of MSP and MSP432 microcontrollers. Aimed at both experienced and new microcontroller developers, ULP Advisor checks your code against a thorough ULP checklist to squeeze every last nano amp out of your application. At build time, ULP Advisor will provide notifications and remarks to highlight areas of your code that can be further optimized for lower power.

IEC 60730 Software Package

The IEC 60730 MSP430 software package was developed to be useful in assisting customers in complying with IEC 60730-1:2010 (Automatic Electrical Controls for Household and Similar Use – Part 1: General Requirements) for up to Class B products, which includes home appliances, arc detectors, power converters, power tools, e-bikes, and many others. The IEC 60730 MSP430 software package can be embedded in customer applications running on MSP430s to help simplify the customer's certification efforts of functional safety-compliant consumer devices to IEC 60730-1:2010 Class B.

Fixed Point Math Library for MSP

The MSP IQmath and Qmath Libraries are a collection of highly optimized and high-precision mathematical functions for C programmers to seamlessly port a floating-point algorithm into fixed-point code on MSP430 MCUs. These routines are typically used in computationally intensive real-time applications where optimal execution speed, high accuracy, and ultra-low energy are critical. By using the IQmath and Qmath libraries, it is possible to achieve execution speeds considerably faster and energy consumption considerably lower than equivalent code written using floating-point math.

Floating Point Math Library for MSP430

Continuing to innovate in the low-power and low-cost microcontroller space, TI brings you MSPMATHLIB. Leveraging the intelligent peripherals of our devices, this floating point math library of scalar functions brings you up to 26x better performance. Mathlib is easy to integrate into your designs. This library is free and is integrated in both Code Composer Studio and IAR IDEs. Read the user's guide for an in depth look at the math library and relevant benchmarks.

Development Tools

Code Composer Studio™ Integrated Development Environment for MSP Microcontrollers

The Code Composer Studio integrated development environment (IDE) supports all MSP microcontroller devices. The Code Composer Studio IDE comprises a suite of embedded software utilities used to develop and debug embedded applications. It includes an optimizing C/C++ compiler, source code editor, project build environment, debugger, profiler, and many other features. The intuitive IDE provides a single user interface taking you through each step of the application development flow. Familiar utilities and interfaces allow users to get started faster than ever before. The Code Composer Studio IDE combines the advantages of the Eclipse software framework with advanced embedded debug capabilities from TI resulting in a compelling feature-rich development environment for embedded developers. When using the Code Composer Studio IDE with an MSP430 MCU, a unique and powerful set of plugins and embedded software utilities are made available to fully leverage the MSP430 microcontroller.

Command-Line Programmer

MSP Flasher is an open-source shell-based interface for programming MSP microcontrollers through a FET programmer or eZ430 using JTAG or Spy-Bi-Wire (SBW) communication. MSP Flasher can download binary files (.txt or .hex) files directly to the MSP microcontroller without an IDE.

Copyright © 2021 Texas Instruments Incorporated

MSP MCU Programmer and Debugger

The MSP-FET is a powerful emulation development tool – often called a debug probe – that lets users quickly begin application development on MSP low-power microcontrollers (MCU). Creating MCU software usually requires downloading the resulting binary program to the MSP device for validation and debugging. The MSP-FET provides a debug communication pathway between a host computer and the target MSP. Furthermore, the MSP-FET also provides a Backchannel UART connection between the computer's USB interface and the MSP UART. This gives the MSP programmer a convenient method to communicate serially between the MSP and a terminal running on the computer. It also supports loading programs (often called firmware) to the MSP target using the BSL (bootloader) through the UART and I^2C communication protocols.

MSP-GANG Production Programmer

The MSP Gang Programmer is a device programmer that can program up to eight identical MSP430 or MSP432 flash or FRAM devices at the same time. The MSP Gang Programmer connects to a host PC using a standard RS-232 or USB connection and provides flexible programming options that allow the user to fully customize the process. The MSP Gang Programmer is provided with an expansion board, called the Gang Splitter, that implements the interconnections between the MSP Gang Programmer and multiple target devices. Eight cables are provided that connect the expansion board to eight target devices (through JTAG or Spy-Bi-Wire connectors). The programming can be done with a PC or as a stand-alone device. A PC-side graphical user interface is also available and is DLL-based.

10.4 Documentation Support

The following documents describe the MSP430F643x MCUs. Copies of these documents are available on the Internet at www.ti.com.

Receiving Notification of Document Updates

To receive notification of documentation updates—including silicon errata—go to the product folder for your device on ti.com (for links to the product folders, see セクション 10.5). In the upper right corner, click the "Alert me" button. This registers you to receive a weekly digest of product information that has changed (if any). For change details, check the revision history of any revised document.

Errata

MSP430F6438 Device Erratasheet

Describes the known exceptions to the functional specifications for this device.

MSP430F6436 Device Erratasheet

Describes the known exceptions to the functional specifications for this device.

MSP430F6435 Device Erratasheet

Describes the known exceptions to the functional specifications for this device.

MSP430F6433 Device Erratasheet

Describes the known exceptions to the functional specifications for this device.

User's Guides

MSP430x5xx and MSP430x6xx Family User's Guide

Detailed information on the modules and peripherals available in this device family.

IAR Embedded Workbench IDE for MSP430 MCUs User's Guide

This manual describes the use of IAR Embedded Workbench (EW430) with the MSP430 ultra-low-power microcontrollers.

MSP430™ Flash Devices Bootloader (BSL) User's Guide

Copyright © 2021 Texas Instruments Incorporated

The MSP430 BSL lets users communicate with embedded memory in the MSP430 microcontroller during the prototyping phase, final production, and in service. Both the programmable memory (flash memory) and the data memory (RAM) can be modified as required. Do not confuse the bootloader with the bootstrap loader programs found in some digital signal processors (DSPs) that automatically load program code (and data) from external memory to the internal memory of the DSP.

MSP430 Programming With the JTAG Interface

This document describes the functions that are required to erase, program, and verify the memory module of the MSP430 flash-based and FRAM-based microcontroller families using the JTAG communication port. In addition, it describes how to program the JTAG access security fuse that is available on all MSP430 devices. This document describes device access using both the standard 4-wire JTAG interface and the 2-wire JTAG interface, which is also referred to as Spy-Bi-Wire (SBW).

MSP430 Hardware Tools User's Guide

This manual describes the hardware of the TI MSP-FET430 Flash Emulation Tool (FET). The FET is the program development tool for the MSP430 ultra-low-power microcontroller. Both available interface types, the parallel port interface and the USB interface, are described.

Application Reports

MSP430 32-kHz Crystal Oscillators

Selection of the right crystal, correct load circuit, and proper board layout are important for a stable crystal oscillator. This application report summarizes crystal oscillator function and explains the parameters to select the correct crystal for MSP430 ultra-low-power operation. In addition, hints and examples for correct board layout are given. The document also contains detailed information on the possible oscillator tests to ensure stable oscillator operation in mass production.

MSP430 System-Level ESD Considerations

System-level ESD has become increasingly demanding with silicon technology scaling towards lower voltages and the need for designing cost-effective and ultra-low-power components. This application report addresses three different ESD topics to help board designers and OEMs understand and design robust system-level designs.

Copyright © 2021 Texas Instruments Incorporated

10.5 Related Links

表 10-2 lists quick access links. Categories include technical documents, support and community resources, tools and software, and quick access to sample or buy.

表 10-2. Related Links

PARTS	PRODUCT FOLDER	ORDER NOW	TECHNICAL DOCUMENTS	TOOLS & SOFTWARE	SUPPORT & COMMUNITY
MSP430F6438	Click here	Click here	Click here	Click here	Click here
MSP430F6436	Click here	Click here	Click here	Click here	Click here
MSP430F6435	Click here	Click here	Click here	Click here	Click here
MSP430F6433	Click here	Click here	Click here	Click here	Click here

10.6 サポート・リソース

TI E2E™ サポート・フォーラムは、エンジニアが検証済みの回答と設計に関するヒントをエキスパートから迅速かつ直接得ることができる場所です。既存の回答を検索したり、独自の質問をしたりすることで、設計で必要な支援を迅速に得ることができます。

リンクされているコンテンツは、該当する貢献者により、現状のまま提供されるものです。これらは TI の仕様を構成するものではなく、必ずしも TI の見解を反映したものではありません。TI の使用条件を参照してください。

10.7 Trademarks

MSP 430™, MicroStar Junior™, MSP430™, MSP430Ware™, EnergyTrace™, ULP Advisor™, Code Composer Studio™, and TI E2E™ are trademarks of Texas Instruments.
すべての商標は、それぞれの所有者に帰属します。

10.8 静電気放電に関する注意事項

この IC は、ESD によって破損する可能性があります。テキサス・インスツルメンツは、IC を取り扱う際には常に適切な注意を払うことを推奨します。正しい ESD 対策をとらないと、デバイスを破損するおそれがあります。

ESD による破損は、わずかな性能低下からデバイスの完全な故障まで多岐にわたります。精密な IC の場合、パラメータがわずかに変化するだけで公表されている仕様から外れる可能性があるため、破損が発生しやすくなっています。

10.9 Export Control Notice

Recipient agrees to not knowingly export or re-export, directly or indirectly, any product or technical data (as defined by the U.S., EU, and other Export Administration Regulations) including software, or any controlled product restricted by other applicable national regulations, received from disclosing party under nondisclosure obligations (if any), or any direct product of such technology, to any destination to which such export or re-export is restricted or prohibited by U.S. or other applicable laws, without obtaining prior authorization from U.S. Department of Commerce and other competent Government authorities to the extent required by those laws.

10.10 用語集

TI 用語集　　この用語集には、用語や略語の一覧および定義が記載されています。

Copyright © 2021 Texas Instruments Incorporated

11 Mechanical, Packaging, and Orderable Information

The following pages include mechanical, packaging, and orderable information. This information is the most current data available for the designated devices. This data is subject to change without notice and revision of this document. For browser-based versions of this data sheet, refer to the left-hand navigation.

PACKAGING INFORMATION

Orderable part number	Status (1)	Material type (2)	Package | Pins	Package qty | Carrier	RoHS (3)	Lead finish/ Ball material (4)	MSL rating/ Peak reflow (5)	Op temp (°C)	Part marking (6)
MSP430F6433IPZ	Active	Production	LQFP (PZ) | 100	90 | JEDEC TRAY (10+1)	Yes	NIPDAU	Level-3-260C-168 HR	-40 to 85	M430F6433
MSP430F6433IPZ.B	Active	Production	LQFP (PZ) | 100	90 | JEDEC TRAY (10+1)	Yes	NIPDAU	Level-3-260C-168 HR	-40 to 85	M430F6433
MSP430F6433IPZR	Active	Production	LQFP (PZ) | 100	1000 | LARGE T&R	Yes	NIPDAU	Level-3-260C-168 HR	-40 to 85	M430F6433
MSP430F6433IPZR.B	Active	Production	LQFP (PZ) | 100	1000 | LARGE T&R	Yes	NIPDAU	Level-3-260C-168 HR	-40 to 85	M430F6433
MSP430F6433IZCAR	Active	Production	NFBGA (ZCA) | 113	2500 | LARGE T&R	Yes	SNAGCU	Level-3-260C-168 HR	-40 to 85	F6433
MSP430F6433IZCAR.B	Active	Production	NFBGA (ZCA) | 113	2500 | LARGE T&R	Yes	SNAGCU	Level-3-260C-168 HR	-40 to 85	F6433
MSP430F6433IZCAT	Active	Production	NFBGA (ZCA) | 113	250 | SMALL T&R	Yes	SNAGCU	Level-3-260C-168 HR	-40 to 85	F6433
MSP430F6433IZCAT.B	Active	Production	NFBGA (ZCA) | 113	250 | SMALL T&R	Yes	SNAGCU	Level-3-260C-168 HR	-40 to 85	F6433
MSP430F6433IZQWT	Obsolete	Production	BGA MICROSTAR JUNIOR (ZQW) | 113	-	-	Call TI	Call TI	-40 to 85	M430F6433
MSP430F6435IPZ	Active	Production	LQFP (PZ) | 100	90 | JEDEC TRAY (10+1)	Yes	NIPDAU	Level-3-260C-168 HR	-40 to 85	M430F6435
MSP430F6435IPZ.B	Active	Production	LQFP (PZ) | 100	90 | JEDEC TRAY (10+1)	Yes	NIPDAU	Level-3-260C-168 HR	-40 to 85	M430F6435
MSP430F6435IPZR	Active	Production	LQFP (PZ) | 100	1000 | LARGE T&R	Yes	NIPDAU	Level-3-260C-168 HR	-40 to 85	M430F6435
MSP430F6435IPZR.B	Active	Production	LQFP (PZ) | 100	1000 | LARGE T&R	Yes	NIPDAU	Level-3-260C-168 HR	-40 to 85	M430F6435
MSP430F6436IPZ	Active	Production	LQFP (PZ) | 100	90 | JEDEC TRAY (10+1)	Yes	NIPDAU	Level-3-260C-168 HR	-40 to 85	M430F6436
MSP430F6436IPZ.B	Active	Production	LQFP (PZ) | 100	90 | JEDEC TRAY (10+1)	Yes	NIPDAU	Level-3-260C-168 HR	-40 to 85	M430F6436
MSP430F6436IPZR	Active	Production	LQFP (PZ) | 100	1000 | LARGE T&R	Yes	NIPDAU	Level-3-260C-168 HR	-40 to 85	M430F6436
MSP430F6436IPZR.B	Active	Production	LQFP (PZ) | 100	1000 | LARGE T&R	Yes	NIPDAU	Level-3-260C-168 HR	-40 to 85	M430F6436
MSP430F6438IPZ	Active	Production	LQFP (PZ) | 100	90 | JEDEC TRAY (10+1)	Yes	NIPDAU	Level-3-260C-168 HR	-40 to 85	M430F6438
MSP430F6438IPZ.B	Active	Production	LQFP (PZ) | 100	90 | JEDEC TRAY (10+1)	Yes	NIPDAU	Level-3-260C-168 HR	-40 to 85	M430F6438
MSP430F6438IPZR	Active	Production	LQFP (PZ) | 100	1000 | LARGE T&R	Yes	NIPDAU	Level-3-260C-168 HR	-40 to 85	M430F6438
MSP430F6438IPZR.B	Active	Production	LQFP (PZ) | 100	1000 | LARGE T&R	Yes	NIPDAU	Level-3-260C-168 HR	-40 to 85	M430F6438
MSP430F6438IZCAR	Active	Production	NFBGA (ZCA) | 113	2500 | LARGE T&R	Yes	SNAGCU	Level-3-260C-168 HR	-40 to 85	F6438

Orderable part number	Status (1)	Material type (2)	Package | Pins	Package qty | Carrier	RoHS (3)	Lead finish/ Ball material (4)	MSL rating/ Peak reflow (5)	Op temp (°C)	Part marking (6)
MSP430F6438IZCAR.B	Active	Production	NFBGA (ZCA) | 113	2500 | LARGE T&R	Yes	SNAGCU	Level-3-260C-168 HR	-40 to 85	F6438
MSP430F6438IZQWR	Obsolete	Production	BGA MICROSTAR JUNIOR (ZQW) | 113	-	-	Call TI	Call TI	-40 to 85	M430F6438

(1) **Status:** For more details on status, see our product life cycle.

(2) **Material type:** When designated, preproduction parts are prototypes/experimental devices, and are not yet approved or released for full production. Testing and final process, including without limitation quality assurance, reliability performance testing, and/or process qualification, may not yet be complete, and this item is subject to further changes or possible discontinuation. If available for ordering, purchases will be subject to an additional waiver at checkout, and are intended for early internal evaluation purposes only. These items are sold without warranties of any kind.

(3) **RoHS values:** Yes, No, RoHS Exempt. See the TI RoHS Statement for additional information and value definition.

(4) **Lead finish/Ball material:** Parts may have multiple material finish options. Finish options are separated by a vertical ruled line. Lead finish/Ball material values may wrap to two lines if the finish value exceeds the maximum column width.

(5) **MSL rating/Peak reflow:** The moisture sensitivity level ratings and peak solder (reflow) temperatures. In the event that a part has multiple moisture sensitivity ratings, only the lowest level per JEDEC standards is shown. Refer to the shipping label for the actual reflow temperature that will be used to mount the part to the printed circuit board.

(6) **Part marking:** There may be an additional marking, which relates to the logo, the lot trace code information, or the environmental category of the part.

Multiple part markings will be inside parentheses. Only one part marking contained in parentheses and separated by a "~" will appear on a part. If a line is indented then it is a continuation of the previous line and the two combined represent the entire part marking for that device.

Important Information and Disclaimer: The information provided on this page represents TI's knowledge and belief as of the date that it is provided. TI bases its knowledge and belief on information provided by third parties, and makes no representation or warranty as to the accuracy of such information. Efforts are underway to better integrate information from third parties. TI has taken and continues to take reasonable steps to provide representative and accurate information but may not have conducted destructive testing or chemical analysis on incoming materials and chemicals. TI and TI suppliers consider certain information to be proprietary, and thus CAS numbers and other limited information may not be available for release.

In no event shall TI's liability arising out of such information exceed the total purchase price of the TI part(s) at issue in this document sold by TI to Customer on an annual basis.

TAPE AND REEL INFORMATION

REEL DIMENSIONS

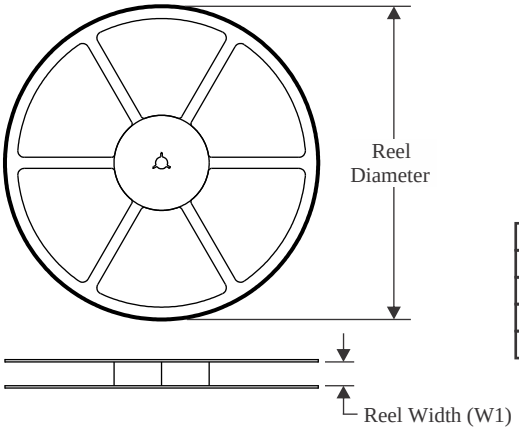

TAPE DIMENSIONS

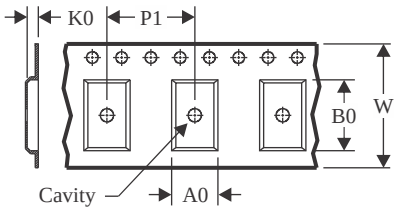

A0	Dimension designed to accommodate the component width
B0	Dimension designed to accommodate the component length
K0	Dimension designed to accommodate the component thickness
W	Overall width of the carrier tape
P1	Pitch between successive cavity centers

QUADRANT ASSIGNMENTS FOR PIN 1 ORIENTATION IN TAPE

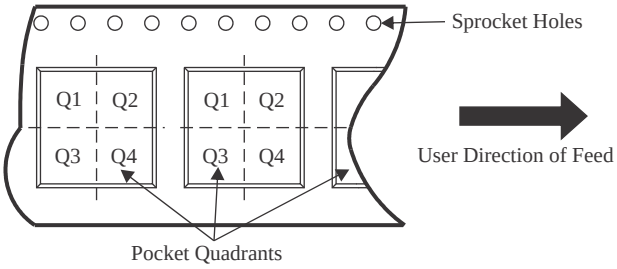

*All dimensions are nominal

Device	Package Type	Package Drawing	Pins	SPQ	Reel Diameter (mm)	Reel Width W1 (mm)	A0 (mm)	B0 (mm)	K0 (mm)	P1 (mm)	W (mm)	Pin1 Quadrant
MSP430F6436IPZR	LQFP	PZ	100	1000	330.0	24.4	17.0	17.0	2.1	20.0	24.0	Q2
MSP430F6438IPZR	LQFP	PZ	100	1000	330.0	24.4	17.0	17.0	2.1	20.0	24.0	Q2

TAPE AND REEL BOX DIMENSIONS

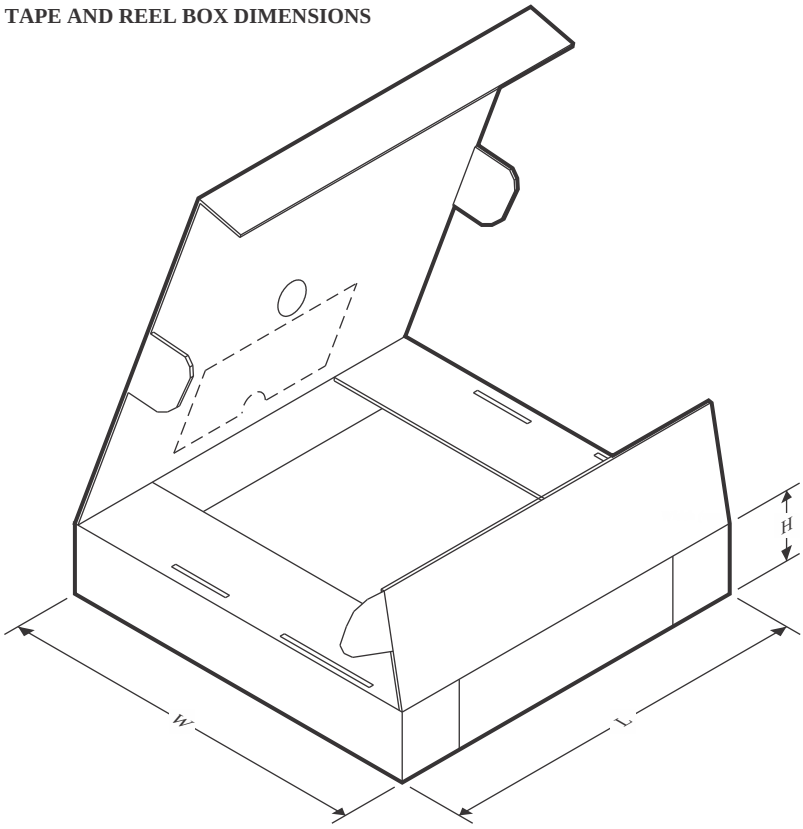

*All dimensions are nominal

Device	Package Type	Package Drawing	Pins	SPQ	Length (mm)	Width (mm)	Height (mm)
MSP430F6436IPZR	LQFP	PZ	100	1000	367.0	367.0	45.0
MSP430F6438IPZR	LQFP	PZ	100	1000	350.0	350.0	43.0

TRAY

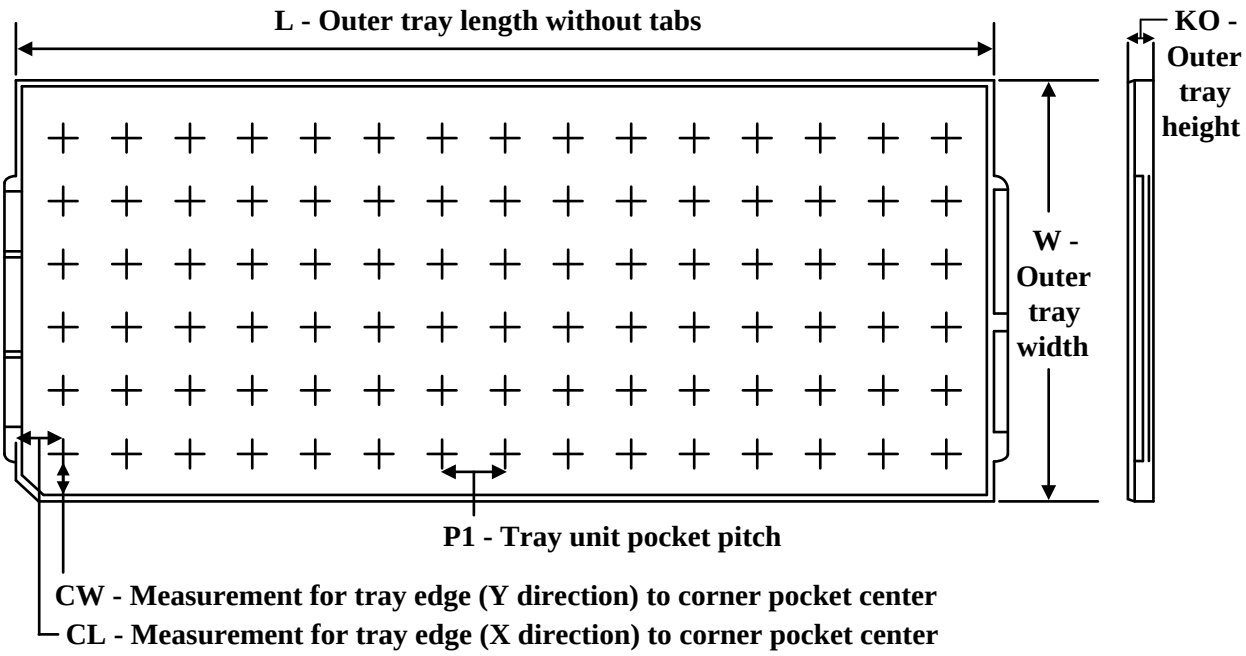

Chamfer on Tray corner indicates Pin 1 orientation of packed units.

*All dimensions are nominal

Device	Package Name	Package Type	Pins	SPQ	Unit array matrix	Max temperature (°C)	L (mm)	W (mm)	K0 (µm)	P1 (mm)	CL (mm)	CW (mm)
MSP430F6433IPZ	PZ	LQFP	100	90	6 x 15	150	315	135.9	7620	20.3	15.4	15.45
MSP430F6433IPZ.B	PZ	LQFP	100	90	6 x 15	150	315	135.9	7620	20.3	15.4	15.45
MSP430F6433IZCAT	ZCA	NFBGA	113	250	10 x 26	150	315	135.9	7620	11.8	10	10.35
MSP430F6433IZCAT.B	ZCA	NFBGA	113	250	10 x 26	150	315	135.9	7620	11.8	10	10.35
MSP430F6435IPZ	PZ	LQFP	100	90	6 x 15	150	315	135.9	7620	20.3	15.4	15.45
MSP430F6435IPZ.B	PZ	LQFP	100	90	6 x 15	150	315	135.9	7620	20.3	15.4	15.45
MSP430F6436IPZ	PZ	LQFP	100	90	6 x 15	150	315	135.9	7620	20.3	15.4	15.45
MSP430F6436IPZ.B	PZ	LQFP	100	90	6 x 15	150	315	135.9	7620	20.3	15.4	15.45
MSP430F6438IPZ	PZ	LQFP	100	90	6 x 15	150	315	135.9	7620	20.3	15.4	15.45
MSP430F6438IPZ.B	PZ	LQFP	100	90	6 x 15	150	315	135.9	7620	20.3	15.4	15.45

PLASTIC BALL GRID ARRAY

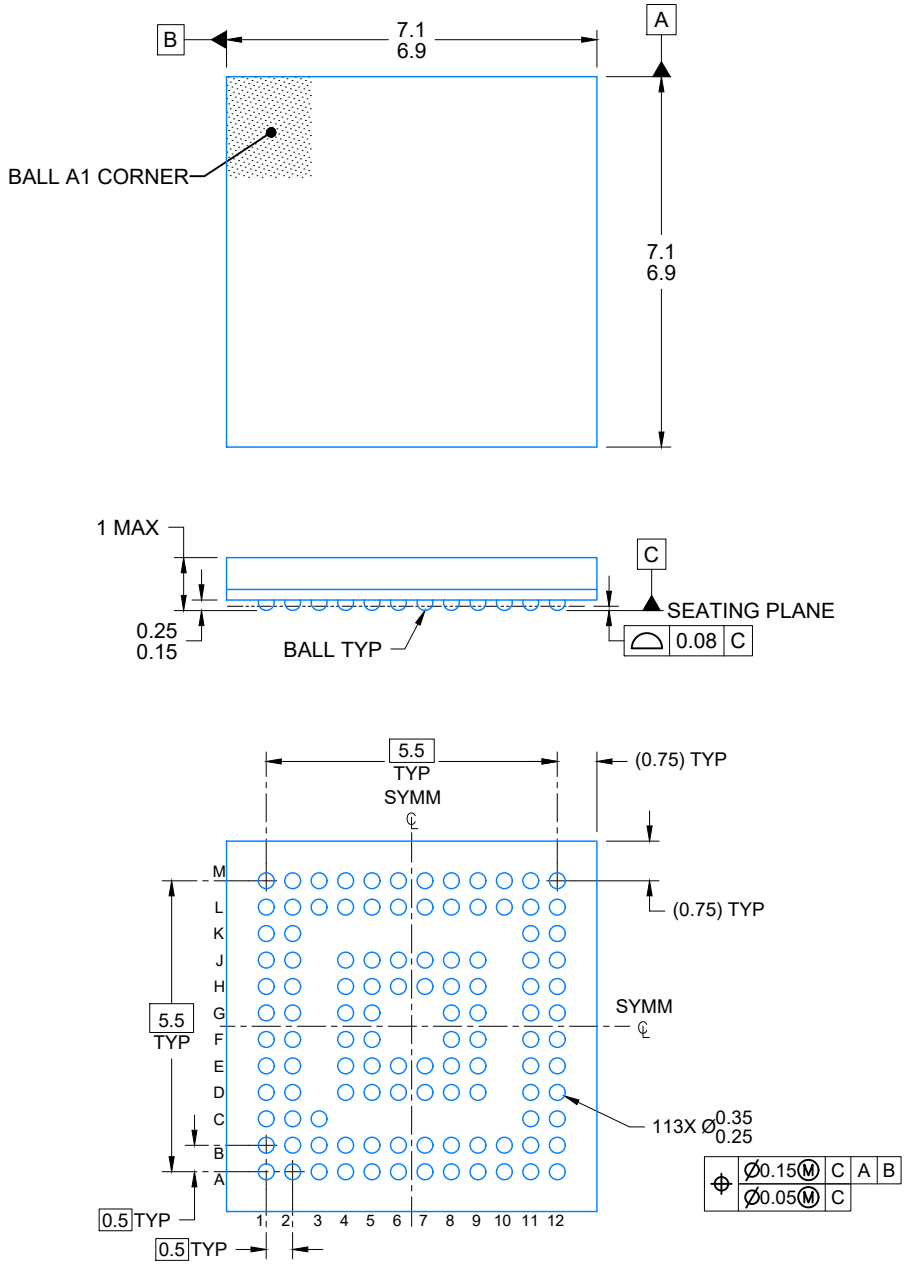

4225149/A 08/2019

NOTES:

NanoFree is a trademark of Texas Instruments.

1. All linear dimensions are in millimeters. Any dimensions in parenthesis are for reference only. Dimensioning and tolerancing per ASME Y14.5M.
2. This drawing is subject to change without notice.

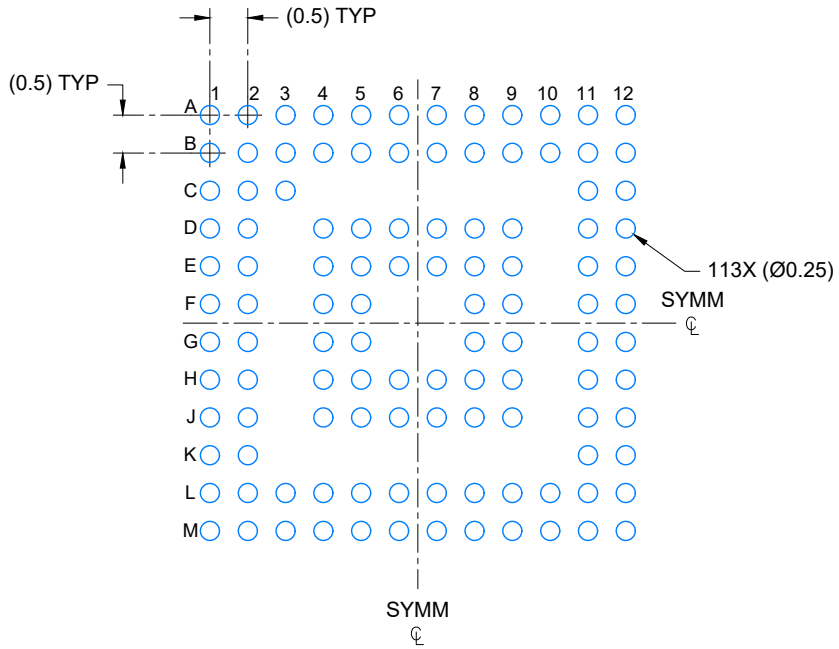

LAND PATTERN EXAMPLE

SCALE: 10X

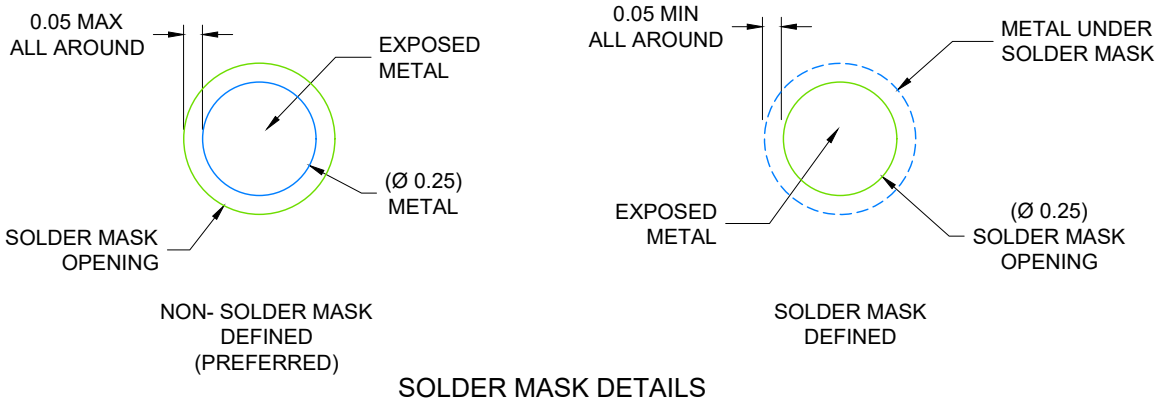

SOLDER MASK DETAILS

NOT TO SCALE

4225149/A 08/2019

NOTES: (continued)

3. Final dimensions may vary due to manufacturing tolerance considerations and also routing constraints. Refer to Texas Instruments Literature number SNVA009 (www.ti.com/lit/snva009).

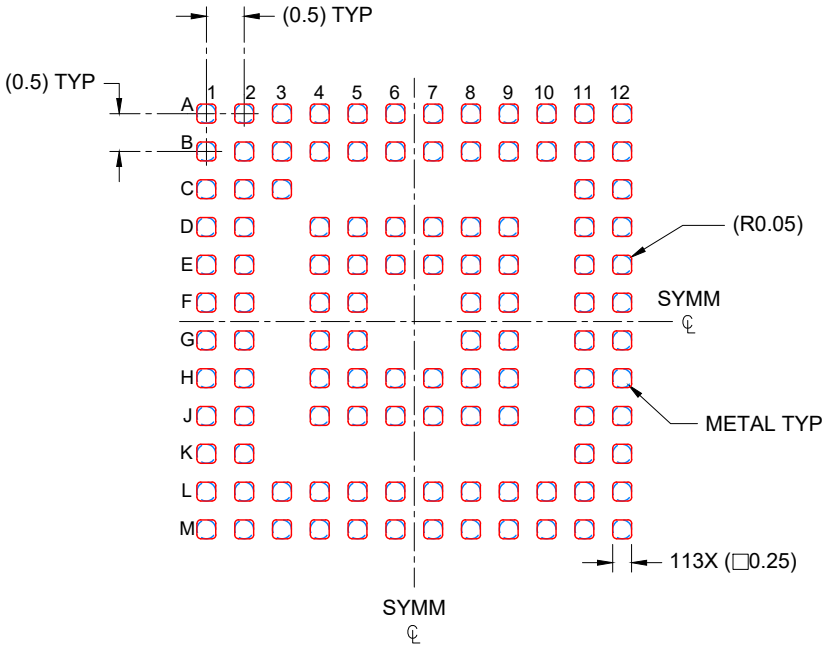

SOLDER PASTE EXAMPLE
BASED ON 0.100 mm THICK STENCIL
SCALE: 10X

4225149/A 08/2019

NOTES: (continued)

4. Laser cutting apertures with trapezoidal walls and rounded corners may offer better paste release.

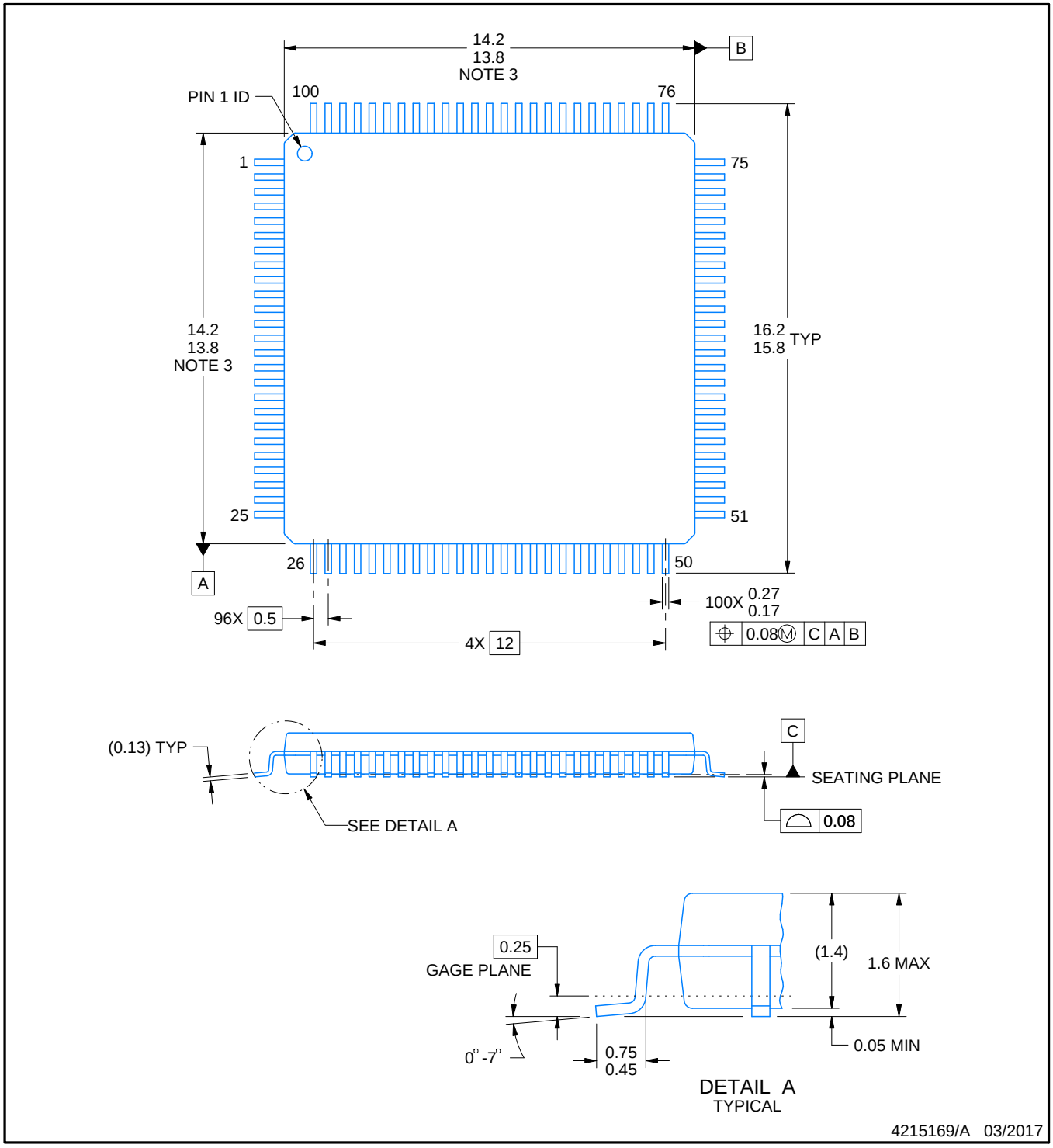

NOTES:

1. All linear dimensions are in millimeters. Any dimensions in parenthesis are for reference only. Dimensioning and tolerancing per ASME Y14.5M.
2. This drawing is subject to change without notice.
3. This dimension does not include mold flash, protrusions, or gate burrs. Mold flash, protrusions, or gate burrs shall not exceed 0.15 mm per side.
4. Reference JEDEC registration MS-026.

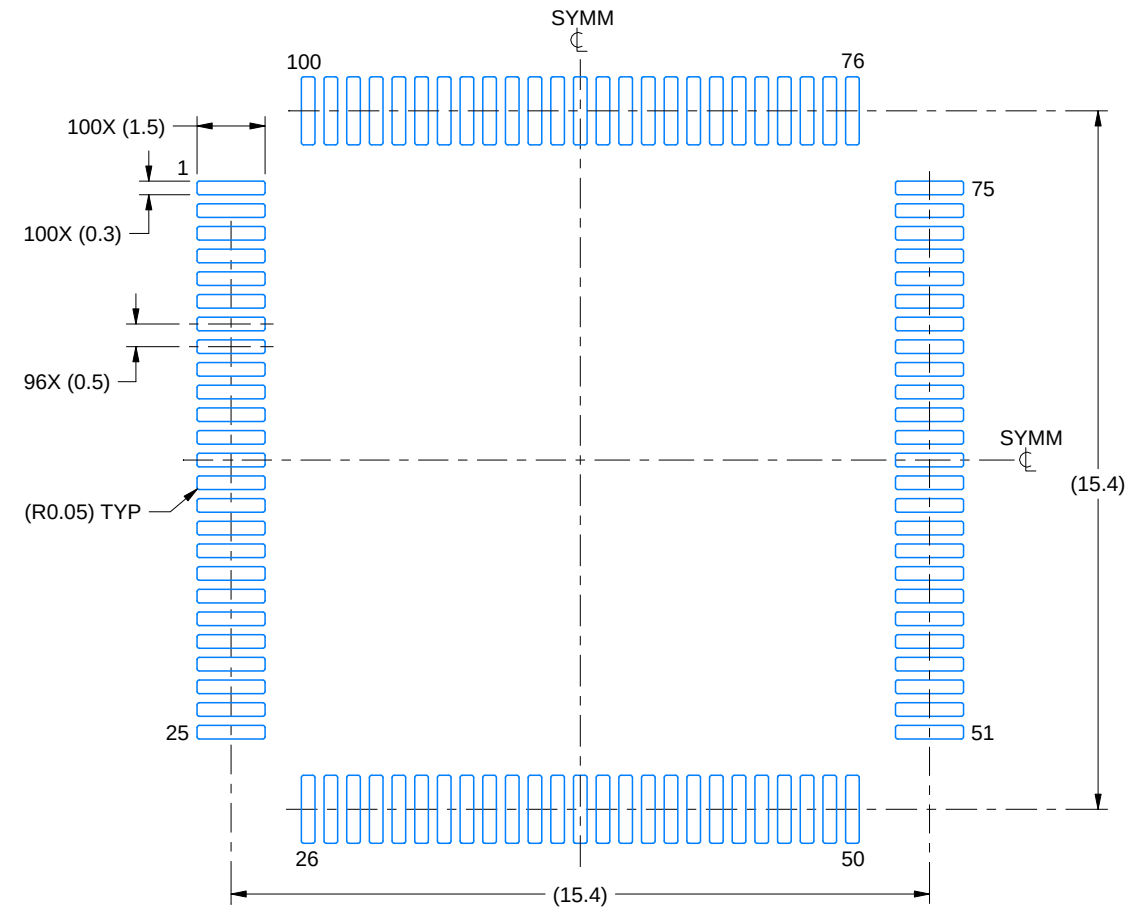

LAND PATTERN EXAMPLE
EXPOSED METAL SHOWN
SCALE:6X

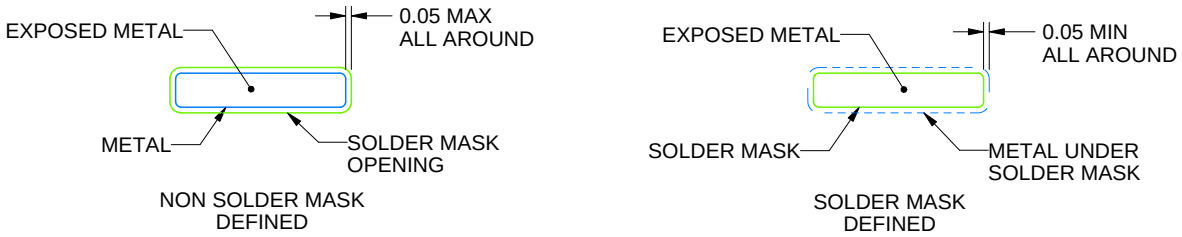

SOLDER MASK DETAILS

4215169/A 03/2017

NOTES: (continued)

5. Publication IPC-7351 may have alternate designs.
6. Solder mask tolerances between and around signal pads can vary based on board fabrication site.
7. For more information, see Texas Instruments literature number SLMA004 (www.ti.com/lit/slma004).

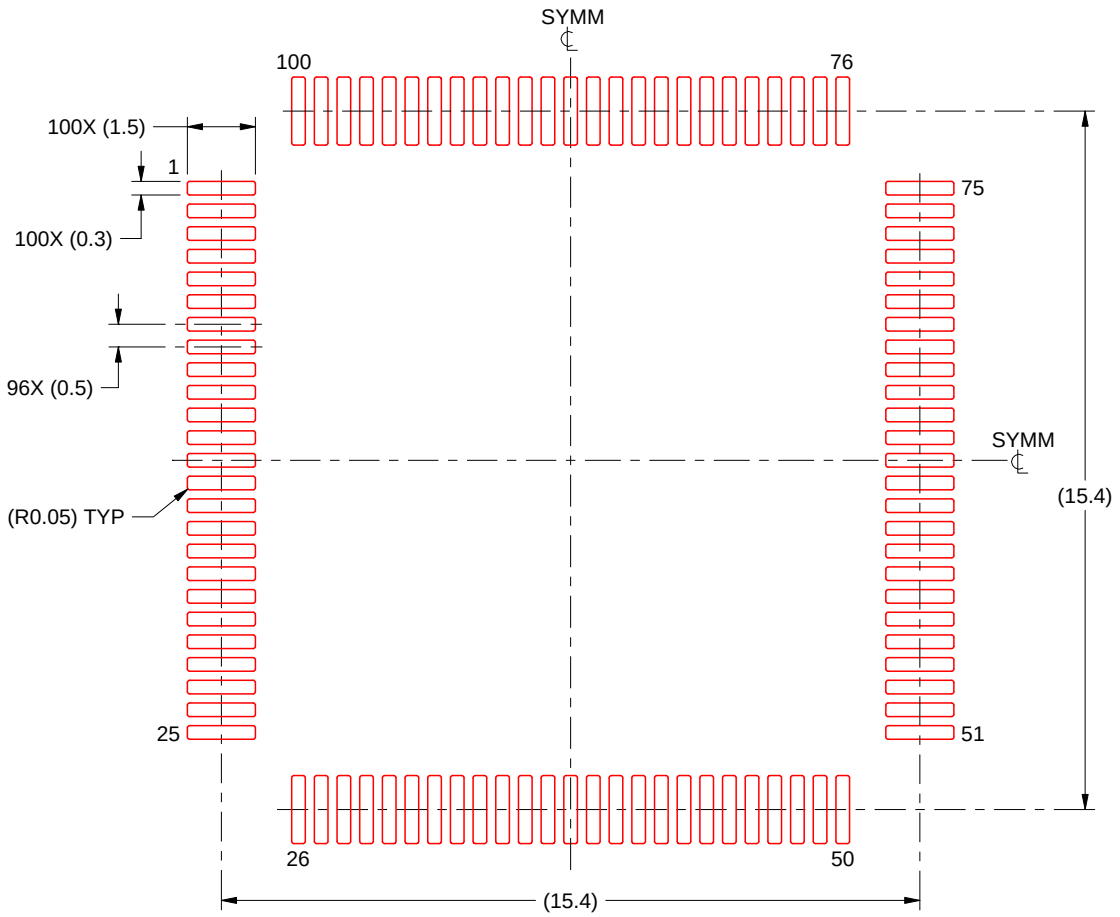

SOLDER PASTE EXAMPLE
BASED ON 0.125 mm THICK STENCIL
SCALE:6X

4215169/A 03/2017

NOTES: (continued)

8. Laser cutting apertures with trapezoidal walls and rounded corners may offer better paste release. IPC-7525 may have alternate design recommendations.
9. Board assembly site may have different recommendations for stencil design.

ZQW (S–PBGA–N113) PLASTIC BALL GRID ARRAY

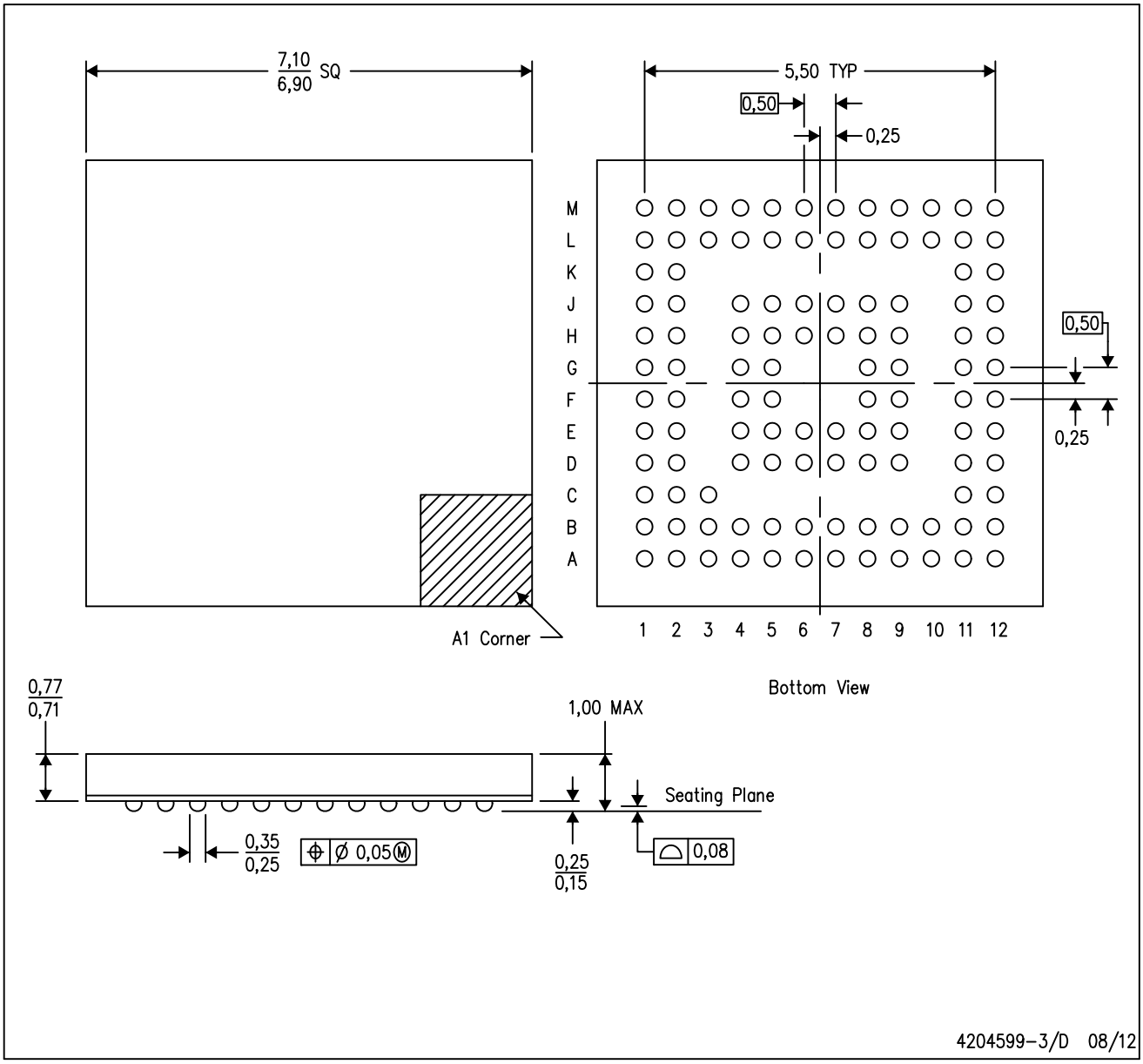

NOTES:
A. All linear dimensions are in millimeters.
B. This drawing is subject to change without notice.
C. Falls within JEDEC MO–225
D. This is a Pb–free solder ball design.

MicroStar Junior is a trademark of Texas Instruments.

重要なお知らせと免責事項

テキサス· インスツルメンツは、技術データと信頼性データ (データシートを含みます)、設計リソース (リファレンス デザインを含みます)、アプリケーションや設計に関する各種アドバイス、Web ツール、安全性情報、その他のリソースを、欠陥が存在する可能性のある「現状のまま」提供しており、商品性および特定目的に対する適合性の黙示保証、第三者の知的財産権の非侵害保証を含むいかなる保証も、明示的または黙示的にかかわらず拒否します。

これらのリソースは、 テキサス· インスツルメンツ製品を使用する設計の経験を積んだ開発者への提供を意図したものです。(1) お客様のアプリケーションに適した テキサス· インスツルメンツ製品の選定、(2) お客様のアプリケーションの設計、検証、試験、(3) お客様のアプリケーションに該当する各種規格や、その他のあらゆる安全性、セキュリティ、規制、または他の要件への確実な適合に関する責任を、お客様のみが単独で負うものとします。

上記の各種リソースは、予告なく変更される可能性があります。これらのリソースは、リソースで説明されている テキサス· インスツルメンツ製品を使用するアプリケーションの開発の目的でのみ、 テキサス· インスツルメンツはその使用をお客様に許諾します。これらのリソースに関して、他の目的で複製することや掲載することは禁止されています。 テキサス· インスツルメンツや第三者の知的財産権のライセンスが付与されている訳ではありません。お客様は、これらのリソースを自身で使用した結果発生するあらゆる申し立て、損害、費用、損失、責任について、 テキサス· インスツルメンツおよびその代理人を完全に補償するものとし、 テキサス· インスツルメンツは一切の責任を拒否します。

テキサス· インスツルメンツの製品は、 テキサス· インスツルメンツの販売条件、または ti.com やかかる テキサス· インスツルメンツ製品の関連資料などのいずれかを通じて提供する適用可能な条項の下で提供されています。 テキサス· インスツルメンツがこれらのリソースを提供することは、適用される テキサス· インスツルメンツの保証または他の保証の放棄の拡大や変更を意味するものではありません。

お客様がいかなる追加条項または代替条項を提案した場合でも、 テキサス· インスツルメンツはそれらに異議を唱え、拒否します。

郵送先住所：Texas Instruments, Post Office Box 655303, Dallas, Texas 75265
Copyright © 2025, Texas Instruments Incorporated