LP8769-Q1 高周波、クワッド降圧 DC/DC コンバータ

1 特長

- 下記内容で AEC-Q100 認定済み:
  - 入力電圧:2.8 V～5.5V
  - デバイス温度グレード 1:-40℃～+125℃の動作時周囲温度範囲
  - デバイス HBM ESD 分類レベル 2
  - デバイス CDM ESD 分類レベル C4B
- 機能安全準拠
  - 機能安全アプリケーション向けに開発
  - ASIL-D までの ISO 26262 システムの設計に役立つ資料を提供
  - SIL-3 までの IEC 61508 システムの設計に役立つ資料を提供
  - ASIL-D までの決定論的能力
  - ASIL-D までのハードウェア安全度
  - 電圧および過電流のウィンドウ・モニタ
  - トリガ / Q&A モードを選択可能なウォッチドッグ
  - レベルまたは PWM エラー信号モニタ (ESM)
  - 温度監視と高温警告およびサーマル・シャットダウン
  - 構成レジスタと不揮発性メモリ (NVM) のビット整合性 (CRC) エラー検出
- 4 つの高効率降圧 DC/DC コンバータ:
  - 出力電圧:0.3V～3.34V (多相出力で 0.3V～1.9V)
  - 最大出力電流:1 相あたり 5A、4 相構成で最大 20A
  - 出力電圧のスルーレートをプログラム可能:0.5mV/µs～33mV/µs
  - スイッチング周波数:2.2MHz または 4.4MHz
- 設定が可能な 10 個の汎用 I/O (GPIO)
- マルチ PMIC 同期用 SPMI インターフェイス
- 入力過電圧保護 (OVP) および低電圧誤動作防止 (UVLO)

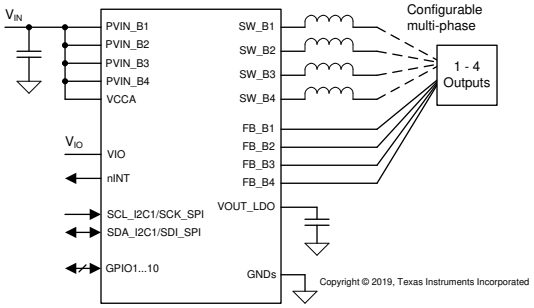

概略回路図

2 アプリケーション

- 先進運転支援システム (ADAS)
- フロント・カメラ
- サラウンド・ビュー・システムの ECU
- 長距離レーダー
- センサ・フュージョン
- ドメイン・コントローラ

3 説明

LP8769x-Q1 デバイスは、さまざまな車載用および産業用の安全関連アプリケーションで、最新のプロセッサおよびプラットフォームの電力管理要件を満たすよう設計されています。このデバイスには 4 つの降圧 DC/DC コンバータ・コアがあり、この出力は、5 種類の相構成が可能で、1 つの 4 相出力から 4 つの単相出力までを選択できます。デバイス設定は、I²C 互換のシリアル・インターフェイス、または SPI シリアル・インターフェイスにより変更可能です。

自動 PFM/PWM (AUTO モード) 動作と、自動相加算および相減算により、広い範囲の出力電流について最大の効率が得られます。LP8769x-Q1 デバイスは、多相出力のリモート差動電圧センシングに対応しており、レギュレータ出力とポイント・オブ・ロード (POL) との間の IR 降下を補償することで出力電圧の精度を高めることができます。スイッチング・クロックを強制的に PWM モードに設定することができ、位相をインターリーブします。スイッチングを外部クロックと同期させることができ、拡散スペクトラム・モードを有効にすることにより、外乱による変動を最小限に抑えられます。

製品情報(1)

部品番号	パッケージ	本体サイズ (公称)
LP8769-Q1	VQFN-HR (32)	5.50mm × 5.00mm

(1) 利用可能なパッケージについては、このデータシートの末尾にある注文情報を参照してください。

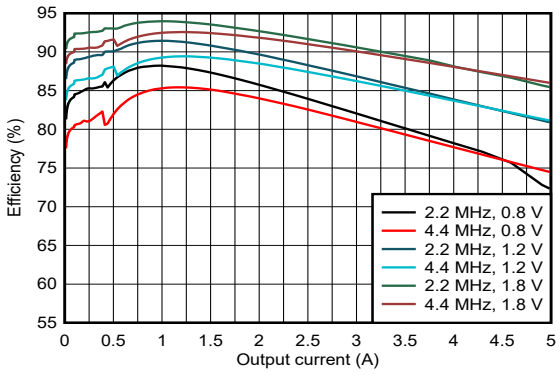

効率と出力電流との関係 (1 相)

英語版の TI 製品についての情報を翻訳したこの資料は、製品の概要を確認する目的で便宜的に提供しているものです。該当する正式な英語版の最新情報は、www.ti.com で閲覧でき、その内容が常に優先されます。TI では翻訳の正確性および妥当性につきましては一切保証いたしません。実際の設計などの前には、必ず最新版の英語版をご参照くださいますようお願いいたします。

Table of Contents

1 特長..... 1
2 アプリケーション..... 1
3 説明..... 1
4 Revision History..... 2
5 Pin Configuration and Functions..... 3
6 Device and Documentation Support..... 8
6.1 Receiving Notification of Documentation Updates..... 8
6.2 サポート・リソース..... 8
6.3 Trademarks..... 8
6.4 Electrostatic Discharge Caution..... 8
6.5 Glossary..... 8
7 Mechanical, Packaging, and Orderable Information..... 8

4 Revision History

資料番号末尾の英字は改訂を表しています。その改訂履歴は英語版に準じています。

DATE	REVISION	NOTES
December 2022	*	Initial release

Copyright © 2023 Texas Instruments Incorporated

5 Pin Configuration and Functions

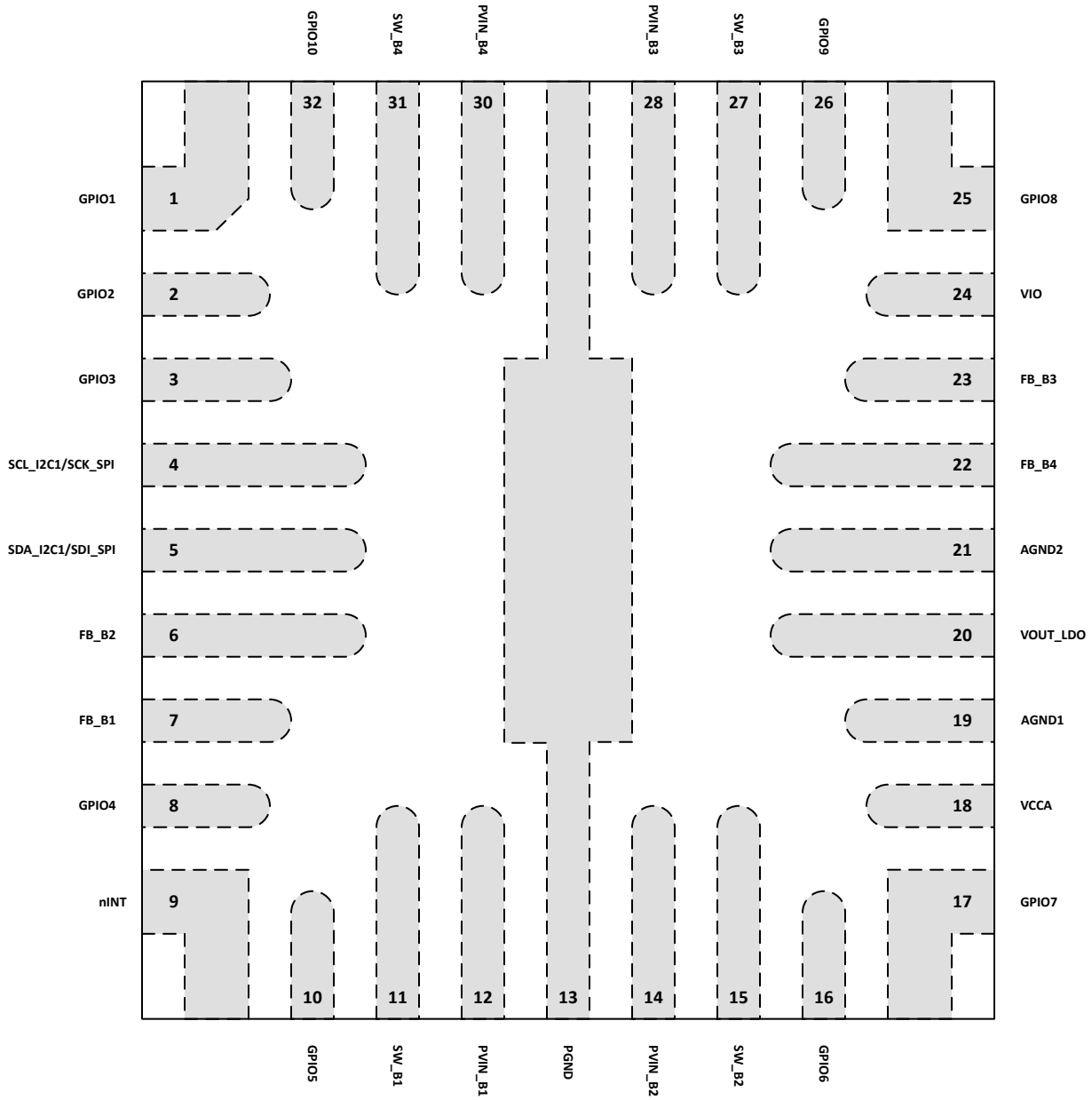

図 5-1. RQK Package 32-Pin VQFN-HR Top View

表 5-1. Pin Functions

PIN		I/O	TYPE	DESCRIPTION	CONNECTION IF NOT USED
NO.	NAME				
1	GPIO1	I/O	Digital	Primary function: General Purpose Input/Output signal. When configured as an output pin, it can be included as part of the power sequencer output signal to enable an external regulator.	Input: Ground, Output: Floating
		O	Digital	Alternative programmable function: EN_DRV - Enable Drive output pin to indicate the device entering safe state (set low when ENABLE_DRV bit is '0').	Floating
		O	Digital	Alternative programmable function: nRSTOUT_SOC - System reset or power on reset output (low = reset).	Floating
		O	Digital	Alternative programmable function: PGOOD - Programmable Power Good indication pin.	Floating
		I	Digital	Alternative programmable function: nSLEEP1 or nSLEEP2, which are the sleep request signals for the device to go to lower power states (Active Low).	Ground
		I	Digital	Alternative programmable function: WKUP1 or WKUP2, which are the wake-up request signals for the device to go to higher power states.	Ground
2	GPIO2	I/O	Digital	Primary function: General Purpose Input/Output signal. When configured as an output pin, it can be included as part of the power sequencer output signal to enable an external regulator.	Input: Ground, Output: Floating
		I	Digital	Alternative programmable function: SCL_I2C2 - Serial interface clock input for I2C access.	Ground
		I	Digital	Alternative programmable function: CS_SPI - Serial interface Chip Select signal for SPI access.	Ground
		I	Digital	Alternative programmable function: TRIG_WDOG - Trigger signal for trigger mode watchdog.	Ground
		I	Digital	Alternative programmable function: nSLEEP1 or nSLEEP2, which are the sleep request signals for the device to go to lower power states (Active Low).	Ground
		I	Digital	Alternative programmable function: WKUP1 or WKUP2, which are the wake-up request signals for the device to go to higher power states.	Ground
3	GPIO3	I/O	Digital	Primary function: General Purpose Input/Output signal. When configured as an output pin, it can be included as part of the power sequencer output signal to enable an external regulator.	Input: Ground, Output: Floating
		I/O	Digital	Alternative programmable function: SDA_I2C2 - Serial interface data input and output for I2C access.	Ground
		O	Digital	Alternative programmable function: SDO_SPI - Serial interface data output signal for SPI access.	Floating
		I	Digital	Alternative programmable function: nSLEEP1 or nSLEEP2, which are the sleep request signals for the device to go to lower power states (Active Low).	Ground
		I	Digital	Alternative programmable function: WKUP1 or WKUP2, which are the wake-up request signals for the device to go to higher power states.	Ground
4	SCL_I2C1/ SCK_SPI	I	Digital	If SPI is not used: SCL_I2C1 - Serial interface clock input for I2C access.	Ground
		I	Digital	If SPI is used: SCK_SPI - Serial interface clock input for SPI access.	Ground
5	SDA_I2C1/ SDI_SPI	I/O	Digital	If SPI is not used: SDA_I2C1 - Serial interface data input and output for I2C access.	Ground
		I	Digital	If SPI is used: SDI_SPI - Serial interface data input signal for SPI access.	Ground
6	FB_B2	—	Analog	Output voltage feedback (positive) for BUCK2. Alternatively ground feedback for BUCK1 in multiphase configuration.	Ground
7	FB_B1	—	Analog	Output voltage feedback (positive) for BUCK1.	Ground

Copyright © 2023 Texas Instruments Incorporated

表 5-1. Pin Functions (continued)

PIN		I/O	TYPE	DESCRIPTION	CONNECTION IF NOT USED
NO.	NAME				
8	GPIO4	I/O	Digital	Primary function: General Purpose Input/Output signal. When configured as an output pin, it can be included as part of the power sequencer output signal to enable an external regulator.	Input: Ground, Output: Floating
		I	Digital	Alternative programmable function: ENABLE - External power-on control.	Ground
		I	Digital	Alternative programmable function: TRIG_WDOG - Trigger signal for trigger mode watchdog.	Ground
		—	Analog	Alternative programmable function: BUCK1_VMON - Voltage monitoring input for BUCK1 regulator.	Ground
		I	Digital	Alternative programmable function: nSLEEP1 or nSLEEP2, which are the sleep request signals for the device to go to lower power states (Active Low).	Ground
		I	Digital	Alternative programmable function: WKUP1 or WKUP2, which are the wake-up request signals for the device to go to higher power states.	Ground
9	nINT	O	Digital	Open-drain interrupt output, active LOW.	Floating
10	GPIO5	I/O	Digital	Primary function: General Purpose Input/Output signal. When configured as an output pin, it can be included as part of the power sequencer output signal to enable an external regulator.	Input: Ground, Output: Floating
		I	Digital	Alternative programmable function: SYNCCLKIN - External switching clock input for Buck regulators.	Ground
		O	Digital	Alternative programmable function: SYNCCLKOUT - Switching clock output for external regulators.	Floating
		O	Digital	Alternative programmable function: nRSTOUT_SOC - System reset or power on reset output (low = reset).	Floating
		I	Digital	Alternative programmable function: nSLEEP1 or nSLEEP2, which are the sleep request signals for the device to go to lower power states (Active Low).	Ground
		I	Digital	Alternative programmable function: WKUP1 or WKUP2, which are the wake-up request signals for the device to go to higher power states.	Ground
11	SW_B1	—	Analog	BUCK1 switch node.	Floating
12	PVIN_B1	—	Power	Power input for BUCK1. The separate power pins PVIN_Bx are not connected together internally – PVIN_Bx and VCCA pins must be connected together in the application and be locally bypassed.	System supply
13	PGND	—	Ground	Power ground for Buck regulators.	Ground
14	PVIN_B2	—	Power	Power input for BUCK2. The separate power pins PVIN_Bx are not connected together internally – PVIN_Bx and VCCA pins must be connected together in the application and be locally bypassed.	System supply
15	SW_B2	—	Analog	BUCK2 switch node.	Floating
16	GPIO6	I/O	Digital	Primary function: General Purpose Input/Output signal. When configured as an output pin, it can be included as part of the power sequencer output signal to enable an external regulator.	Input: Ground, Output: Floating
		I	Digital	Alternative programmable function: nERR_MCU - System error count down input signal from the MCU.	Floating
		O	Digital	Alternative programmable function: SYNCCLKOUT - Switching clock output for external regulators.	Floating
		O	Digital	Alternative programmable function: PGOOD - Programmable Power Good indication pin.	Floating
		I	Digital	Alternative programmable function: nSLEEP1 or nSLEEP2, which are the sleep request signals for the device to go to lower power states (Active Low).	Ground
		I	Digital	Alternative programmable function: WKUP1 or WKUP2, which are the wake-up request signals for the device to go to higher power states.	Ground

Copyright © 2023 Texas Instruments Incorporated

表 5-1. Pin Functions (continued)

PIN		I/O	TYPE	DESCRIPTION	CONNECTION IF NOT USED
NO.	NAME				
17	GPIO7	I/O	Digital	Primary function: General Purpose Input/Output signal. When configured as an output pin, it can be included as part of the power sequencer output signal to enable an external regulator.	Input: Ground, Output: Floating
		I	Digital	Alternative programmable function: nERR_MCU - System error count down input signal from the MCU.	Floating
		O	Analog	Alternative programmable function: REFOUT - Buffered bandgap output.	Floating
		I	Analog	Alternative programmable function: VMON1 - External voltage monitoring input.	Ground
		I	Digital	Alternative programmable function: nSLEEP1 or nSLEEP2, which are the sleep request signals for the device to go to lower power states (Active Low).	Ground
		I	Digital	Alternative programmable function: WKUP1 or WKUP2, which are the wake-up request signals for the device to go to higher power states.	Ground
18	VCCA	—	Power	Supply voltage for internal LDO. VCCA and PVIN_Bx pins must be connected together in the application and be locally bypassed.	System supply
19	AGND1	—	Ground	Ground	Ground
20	VOUT_LDO	—	Power	LDO regulator filter node. LDO is used for internal purposes.	—
21	AGND2	—	Ground	Ground	Ground
22	FB_B4	—	Analog	Output voltage feedback (positive) for BUCK4. Alternatively ground feedback for BUCK3 in dualphase configuration.	Ground
23	FB_B3	—	Analog	Output voltage feedback (positive) for BUCK3.	Ground
24	VIO	—	Power	Supply voltage for selected digital outputs.	Ground
25	GPIO8	I/O	Digital	Primary function: General Purpose Input/Output signal. When configured as an output pin, it can be included as part of the power sequencer output signal to enable an external regulator.	Input: Ground, Output: Floating
		I/O	Digital	Alternative programmable function: SCLK_SPMI - Multi-PMIC SPMI serial interface clock signal. This pin is an output pin for the master SPMI device, and an input pin for the slave SPMI device.	Ground
		I	Analog	Alternative programmable function: VMON2 - External voltage monitoring input.	Ground
		I	Digital	Alternative programmable function: nSLEEP1 or nSLEEP2, which are the sleep request signals for the device to go to lower power states (Active Low).	Ground
		I	Digital	Alternative programmable function: WKUP1 or WKUP2, which are the wake-up request signals for the device to go to higher power states.	Ground
26	GPIO9	I/O	Digital	Primary function: General Purpose Input/Output signal. When configured as an output pin, it can be included as part of the power sequencer output signal to enable an external regulator.	Input: Ground, Output: Floating
		I/O	Digital	Alternative programmable function: SDATA_SPMI - Multi-PMIC SPMI serial interface bidirectional data signal	Floating
		O	Digital	Alternative programmable function: PGOOD - Programmable Power Good indication pin.	Floating
		I	Digital	Alternative programmable function: SYNCCLKIN - External switching clock input for Buck regulators.	Ground
		I	Digital	Alternative programmable function: nSLEEP1 or nSLEEP2, which are the sleep request signals for the device to go to lower power states (Active Low).	Ground
		I	Digital	Alternative programmable function: WKUP1 or WKUP2, which are the wake-up request signals for the device to go to higher power states.	Ground
27	SW_B3	—	Analog	BUCK3 switch node.	Floating
28	PVIN_B3	—	Power	Power input for BUCK3. The separate power pins PVIN_Bx are not connected together internally – PVIN_Bx and VCCA pins must be connected together in the application and be locally bypassed.	System supply

Copyright © 2023 Texas Instruments Incorporated

表 5-1. Pin Functions (continued)

PIN		I/O	TYPE	DESCRIPTION	CONNECTION IF NOT USED
NO.	NAME				
30	PVIN_B4	—	Power	Power input for BUCK4. The separate power pins PVIN_Bx are not connected together internally – PVIN_Bx and VCCA pins must be connected together in the application and be locally bypassed.	System supply
31	SW_B4	—	Analog	BUCK4 switch node.	Floating
32	GPIO10	I/O	Digital	Primary function: General Purpose Input/Output signal. When configured as an output pin, it can be included as part of the power sequencer output signal to enable an external regulator.	Input: Ground, Output: Floating
		O	Digital	Alternative programmable function: nRSTOUT - System reset or power on reset output (low = reset).	Floating
		O	Digital	Alternative programmable function: nRSTOUT_SOC - System reset or power on reset output (low = reset).	Floating
		I	Digital	Alternative programmable function: nSLEEP1 or nSLEEP2, which are the sleep request signals for the device to go to lower power states (Active Low).	Ground
		I	Digital	Alternative programmable function: WKUP1 or WKUP2, which are the wake-up request signals for the device to go to higher power states.	Ground

Copyright © 2023 Texas Instruments Incorporated

6 Device and Documentation Support

6.1 Receiving Notification of Documentation Updates

To receive notification of documentation updates, navigate to the device product folder on ti.com. Click on *Subscribe to updates* to register and receive a weekly digest of any product information that has changed. For change details, review the revision history included in any revised document.

6.2 サポート・リソース

TI E2E™ サポート・フォーラムは、エンジニアが検証済みの回答と設計に関するヒントをエキスパートから迅速かつ直接得ることができる場所です。既存の回答を検索したり、独自の質問をしたりすることで、設計で必要な支援を迅速に得ることができます。

リンクされているコンテンツは、該当する貢献者により、現状のまま提供されるものです。これらは TI の仕様を構成するものではなく、必ずしも TI の見解を反映したものではありません。TI の使用条件を参照してください。

6.3 Trademarks

TI E2E™ is a trademark of Texas Instruments.
すべての商標は、それぞれの所有者に帰属します。

6.4 Electrostatic Discharge Caution

This integrated circuit can be damaged by ESD. Texas Instruments recommends that all integrated circuits be handled with appropriate precautions. Failure to observe proper handling and installation procedures can cause damage.

ESD damage can range from subtle performance degradation to complete device failure. Precision integrated circuits may be more susceptible to damage because very small parametric changes could cause the device not to meet its published specifications.

6.5 Glossary

TI Glossary	This glossary lists and explains terms, acronyms, and definitions.

7 Mechanical, Packaging, and Orderable Information

The following pages include mechanical, packaging, and orderable information. This information is the most current data available for the designated devices. This data is subject to change without notice and revision of this document. For browser-based versions of this data sheet, refer to the left-hand navigation.

Copyright © 2023 Texas Instruments Incorporated

PACKAGING INFORMATION

Orderable part number	Status (1)	Material type (2)	Package | Pins	Package qty | Carrier	RoHS (3)	Lead finish/ Ball material (4)	MSL rating/ Peak reflow (5)	Op temp (°C)	Part marking (6)
LP876924C3RQKRQ1	Active	Production	VQFN-HR (RQK) | 32	3000 | LARGE T&R	Yes	SN	Level-2-260C-1 YEAR	-40 to 125	LP8769 24C3-Q1
LP876924C3RQKRQ1.A	Active	Production	VQFN-HR (RQK) | 32	3000 | LARGE T&R	Yes	SN	Level-2-260C-1 YEAR	-40 to 125	LP8769 24C3-Q1
LP876940C0RQKRQ1	Active	Production	VQFN-HR (RQK) | 32	3000 | LARGE T&R	Yes	SN	Level-2-260C-1 YEAR	-40 to 125	LP8769 40C0-Q1
LP876940C0RQKRQ1.A	Active	Production	VQFN-HR (RQK) | 32	3000 | LARGE T&R	Yes	SN	Level-2-260C-1 YEAR	-40 to 125	LP8769 40C0-Q1
LP876945C6RQKRQ1	Active	Production	VQFN-HR (RQK) | 32	3000 | LARGE T&R	Yes	NIPDAU | SN	Level-2-260C-1 YEAR	-40 to 125	LP8769 45C6-Q1

(1) **Status:** For more details on status, see our product life cycle.

(2) **Material type:** When designated, preproduction parts are prototypes/experimental devices, and are not yet approved or released for full production. Testing and final process, including without limitation quality assurance, reliability performance testing, and/or process qualification, may not yet be complete, and this item is subject to further changes or possible discontinuation. If available for ordering, purchases will be subject to an additional waiver at checkout, and are intended for early internal evaluation purposes only. These items are sold without warranties of any kind.

(3) **RoHS values:** Yes, No, RoHS Exempt. See the TI RoHS Statement for additional information and value definition.

(4) **Lead finish/Ball material:** Parts may have multiple material finish options. Finish options are separated by a vertical ruled line. Lead finish/Ball material values may wrap to two lines if the finish value exceeds the maximum column width.

(5) **MSL rating/Peak reflow:** The moisture sensitivity level ratings and peak solder (reflow) temperatures. In the event that a part has multiple moisture sensitivity ratings, only the lowest level per JEDEC standards is shown. Refer to the shipping label for the actual reflow temperature that will be used to mount the part to the printed circuit board.

(6) **Part marking:** There may be an additional marking, which relates to the logo, the lot trace code information, or the environmental category of the part.

Multiple part markings will be inside parentheses. Only one part marking contained in parentheses and separated by a "~" will appear on a part. If a line is indented then it is a continuation of the previous line and the two combined represent the entire part marking for that device.

Important Information and Disclaimer: The information provided on this page represents TI's knowledge and belief as of the date that it is provided. TI bases its knowledge and belief on information provided by third parties, and makes no representation or warranty as to the accuracy of such information. Efforts are underway to better integrate information from third parties. TI has taken and continues to take reasonable steps to provide representative and accurate information but may not have conducted destructive testing or chemical analysis on incoming materials and chemicals. TI and TI suppliers consider certain information to be proprietary, and thus CAS numbers and other limited information may not be available for release.

In no event shall TI's liability arising out of such information exceed the total purchase price of the TI part(s) at issue in this document sold by TI to Customer on an annual basis.

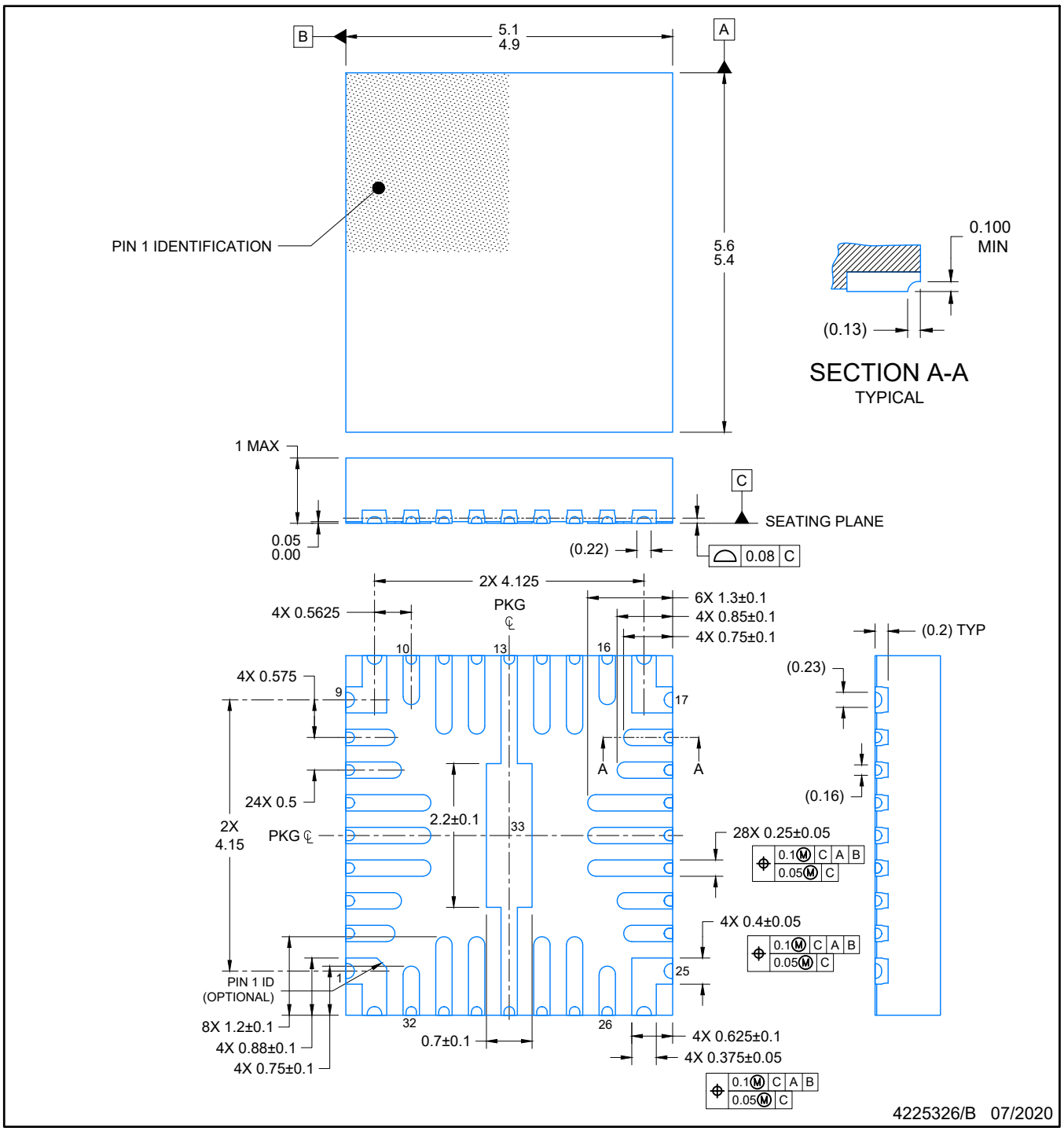

NOTES:

1. All linear dimensions are in millimeters. Any dimensions in parenthesis are for reference only. Dimensioning and tolerancing per ASME Y14.5M.
2. This drawing is subject to change without notice.

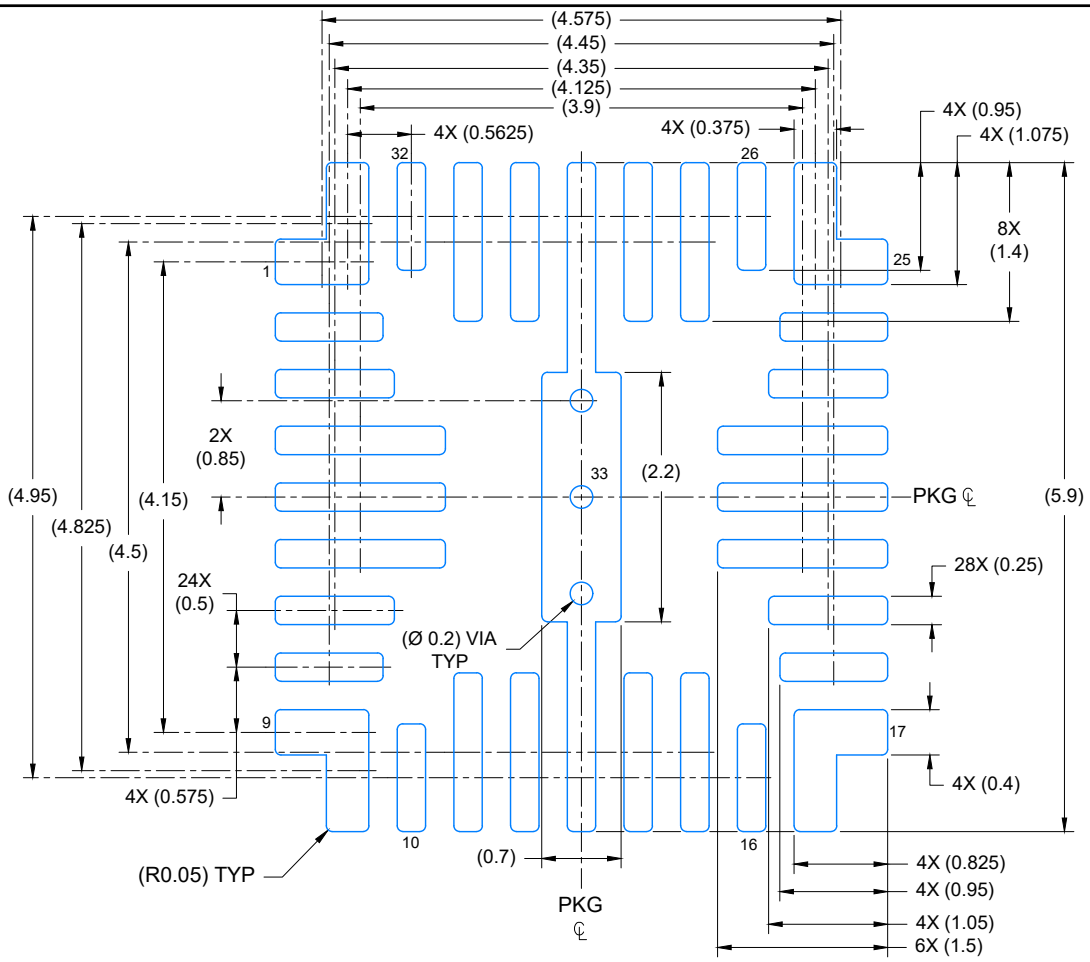

LAND PATTERN EXAMPLE
EXPOSED METAL SHOWN
SCALE: 15X

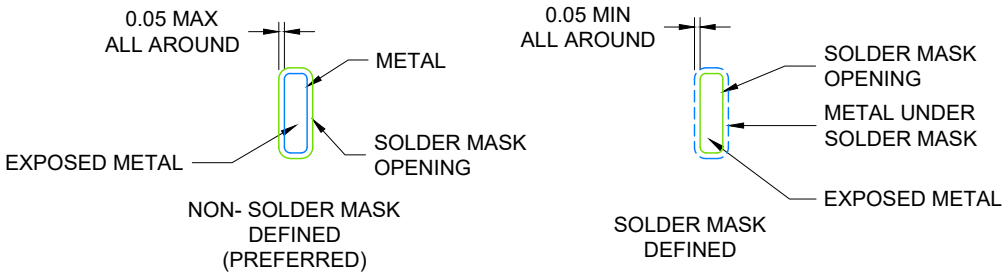

SOLDER MASK DETAILS
NOT TO SCALE

4225326/B 07/2020

NOTES: (continued)

3. For more information, see Texas Instruments literature number SLUA271 (www.ti.com/lit/slua271).
4. Solder mask tolerances between and around signal pads can vary based on board fabrication site.

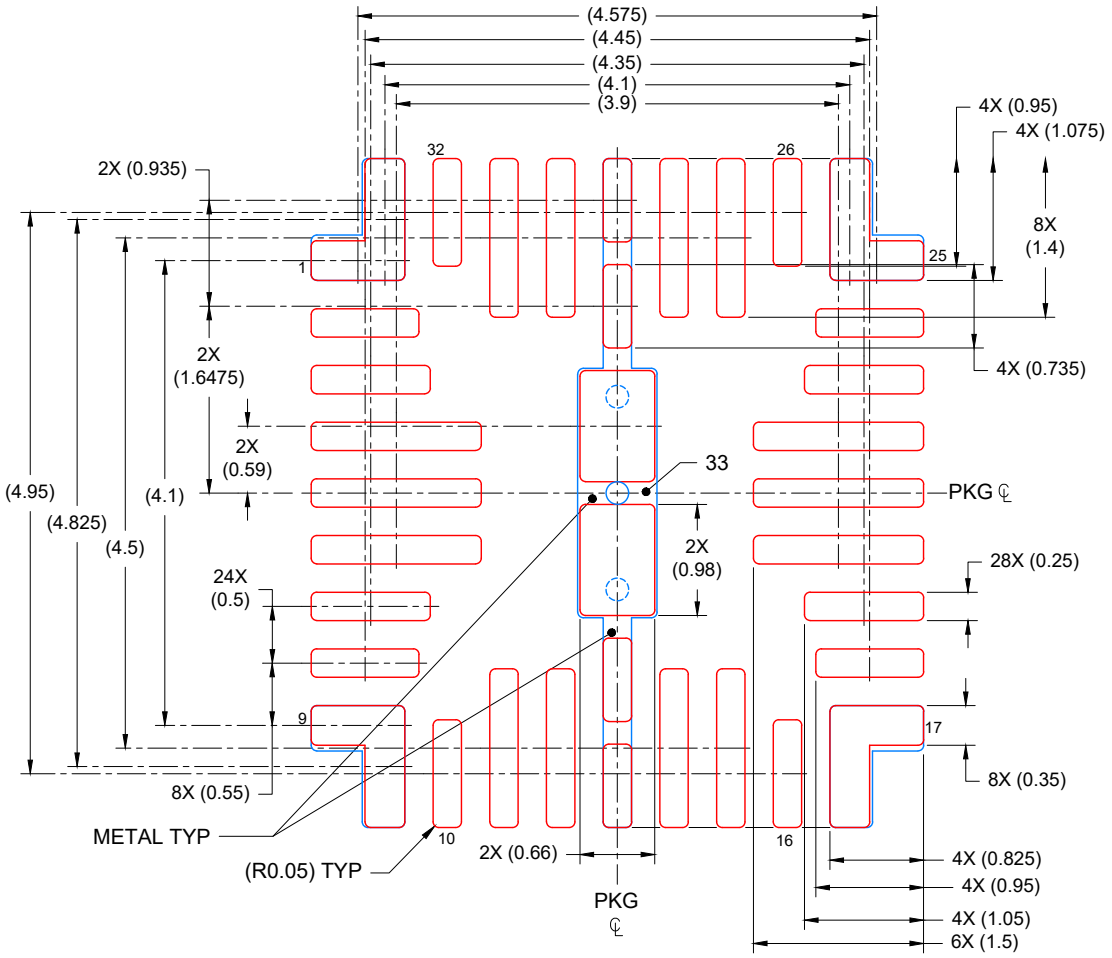

SOLDER PASTE EXAMPLE
BASED ON 0.1mm THICK STENCIL

PIN 1,9,16 & 25: 93%; PIN 13& 29: 79%; PIN 33: 84%
SCALE: 15X

4225326/B 07/2020

NOTES: (continued)

5. Laser cutting apertures with trapezoidal walls and rounded corners may offer better paste release. IPC-7525 may have alternate design recommendations.

重要なお知らせと免責事項

TI は、技術データと信頼性データ (データシートを含みます)、設計リソース (リファレンス デザインを含みます)、アプリケーションや設計に関する各種アドバイス、Web ツール、安全性情報、その他のリソースを、欠陥が存在する可能性のある「現状のまま」提供しており、商品性および特定目的に対する適合性の黙示保証、第三者の知的財産権の非侵害保証を含むいかなる保証も、明示的または黙示的にかかわらず拒否します。

これらのリソースは、TI 製品を使用する設計の経験を積んだ開発者への提供を意図したものです。(1) お客様のアプリケーションに適した TI 製品の選定、(2) お客様のアプリケーションの設計、検証、試験、(3) お客様のアプリケーションに該当する各種規格や、その他のあらゆる安全性、セキュリティ、規制、または他の要件への確実な適合に関する責任を、お客様のみが単独で負うものとします。

上記の各種リソースは、予告なく変更される可能性があります。これらのリソースは、リソースで説明されている TI 製品を使用するアプリケーションの開発の目的でのみ、TI はその使用をお客様に許諾します。これらのリソースに関して、他の目的で複製することや掲載することは禁止されています。TI や第三者の知的財産権のライセンスが付与されている訳ではありません。お客様は、これらのリソースを自身で使用した結果発生するあらゆる申し立て、損害、費用、損失、責任について、TI およびその代理人を完全に補償するものとし、TI は一切の責任を拒否します。

TI の製品は、 TI の販売条件 、 TI の総合的な品質ガイドライン 、 ti.com または TI 製品などに関連して提供される他の適用条件に従い提供されます。TI がこれらのリソースを提供することは、適用される TI の保証または他の保証の放棄の拡大や変更を意味するものではありません。 TI がカスタム、またはカスタマー仕様として明示的に指定していない限り、TI の製品は標準的なカタログに掲載される汎用機器です。

お客様がいかなる追加条項または代替条項を提案する場合も、TI はそれらに異議を唱え、拒否します。

Copyright © 2025, Texas Instruments Incorporated

最終更新日：2025 年 10 月