LP876242-Q1 AWR / IWR ミリ波 IC 向け、4 個の 8.8 MHz 降圧コンバータ

1 特長

- 下記内容で AEC-Q100 認定済み:
  - 入力電圧:3.0 V～5.5V
  - デバイス温度グレード 1:-40℃～+125℃の動作時周囲温度範囲
  - デバイス HBM ESD 分類レベル 2
  - デバイス CDM ESD 分類レベル C4B
- 機能安全準拠
  - 機能安全アプリケーション向けに開発
  - ASIL-D までの ISO 26262 システムの設計に役立つ資料を提供
  - SIL-3 までの IEC 61508 システムの設計に役立つ資料を提供
  - ASIL-D までの決定論的能力
  - ASIL-D までのハードウェア安全度
  - 電圧および過電流のウィンドウ・モニタ
  - トリガ / Q&A モードを選択可能なウォッチドッグ
  - レベルまたは PWM エラー信号モニタ (ESM)
  - 温度監視と高温警告およびサーマル・シャットダウン
  - 構成レジスタと不揮発性メモリ (NVM) のビット整合性 (CRC) エラー検出
- 4 つの高効率降圧 DC/DC コンバータ:
  - 出力電圧:0.9V～1.9V
  - 最大出力電流:4/3/3/2A
  - 出力電圧のスルーレートをプログラム可能:0.5mV/µs～33mV/µs
  - スイッチング周波数:8.8MHz
- 構成可能な 10 個の汎用 I/O (GPIO)
- マルチ PMIC 同期用 SPMI インターフェイス
- 入力過電圧保護 (OVP) および低電圧誤動作防止 (UVLO)

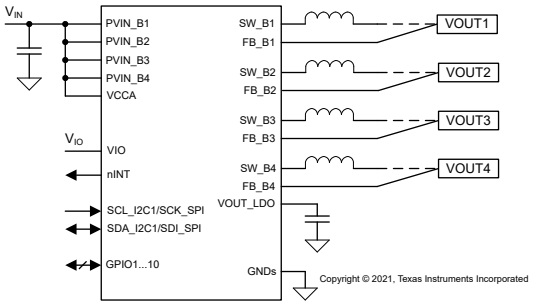

概略回路図

2 アプリケーション

- カスケード接続によるイメージング・レーダー
- 長距離レーダー
- 処理機能なしのレーダー・モジュール

3 説明

LP876242-Q1 デバイスは、さまざまな車載用および産業用の安全関連アプリケーションで、最新のプロセッサおよびプラットフォームの電力管理要件を満たすよう設計されています。このデバイスには 4 つの降圧 DC/DC コンバータ・コアがあり、4 つの単相出力を生成します。デバイス設定は、I^2C 互換のシリアル・インターフェイス、または SPI シリアル・インターフェイスにより変更可能です。

スイッチング・クロックを強制的に PWM モードに設定して、位相をインターリーブします。スイッチングを外部クロックと同期させることができ、拡散スペクトラム・モードを有効にすることにより、外乱による変動を最小限に抑えられます。

LP876242-Q1 デバイスには、レジスタおよびインターフェイス CRC、短絡保護、熱監視、シャットダウンなどの保護および診断機能が搭載されています。LP876242-Q1 デバイスは、これらのイベントを割り込みハンドラでプロセッサへ通知できるので、プロセッサはそれに対する応答動作を実行できます。

製品情報 (1)

部品番号	パッケージ	本体サイズ (公称)
LP876242-Q1	VQFN-HR (32)	5.50mm × 5.00mm

(1) 利用可能なパッケージについては、このデータシートの末尾にある注文情報を参照してください。

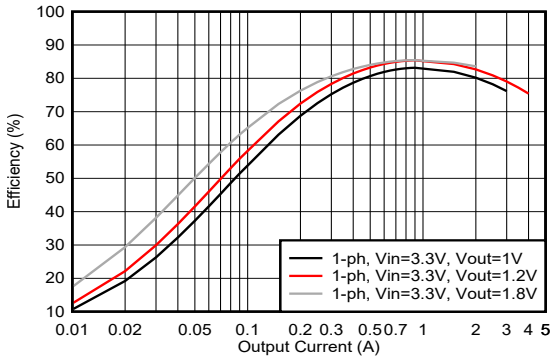

効率と出力電流との関係 (1 相)

英語版の TI 製品についての情報を翻訳したこの資料は、製品の概要を確認する目的で便宜的に提供しているものです。該当する正式な英語版の最新情報は、www.ti.com で閲覧でき、その内容が常に優先されます。TI では翻訳の正確性および妥当性につきましては一切保証いたしません。実際の設計などの前には、必ず最新版の英語版をご参照くださいますようお願いいたします。

Table of Contents

1 特長 ... 1
2 アプリケーション ... 1
3 説明 ... 1
4 Revision History ... 2
5 Pin Configuration and Functions ... 3
5.1 Digital Signal Descriptions ... 8
6 Specifications ... 14
6.1 Absolute Maximum Ratings ... 14
6.2 ESD Ratings ... 14
6.3 Recommended Operating Conditions ... 15
6.4 Thermal Information ... 15
6.5 Internal Low Drop-Out Regulators (LDOVINT) ... 16
6.6 BUCK1, BUCK2, BUCK3, and BUCK4 Regulators ... 16
6.7 Reference Generator (REFOUT) ... 18
6.8 Monitoring Functions ... 18
6.9 Clocks, Oscillators, and DPLL ... 21
6.10 Thermal Monitoring and Shutdown ... 22
6.11 System Control Thresholds ... 23
6.12 Current Consumption ... 23
6.13 Digital Input Signal Parameters ... 24
6.14 Digital Output Signal Parameters ... 24
6.15 I/O Pullup and Pulldown Resistance ... 25
6.16 I^2C Interface ... 25
6.17 Serial Peripheral Interface (SPI) ... 27
6.18 Typical Characteristics ... 29
7 Detailed Description ... 30
7.1 Overview ... 30
7.2 Functional Block Diagram ... 31
7.3 Feature Description ... 31
7.4 Device Functional Modes ... 94
7.5 Control Interfaces ... 123
7.6 NVM Configurable Registers ... 131
7.7 Register Map ... 134
8 Application and Implementation ... 273
8.1 Application Information ... 273
8.2 Typical Applications ... 273
8.3 Layout ... 283
8.4 Power Supply Recommendations ... 286
9 Device and Documentation Support ... 287
9.1 Receiving Notification of Documentation Updates ... 287
9.2 サポート・リソース ... 287
9.3 Trademarks ... 287
9.4 Electrostatic Discharge Caution ... 287
9.5 Glossary ... 287
10 Mechanical, Packaging, and Orderable Information ... 287

4 Revision History

資料番号末尾の英字は改訂を表しています。その改訂履歴は英語版に準じています。

Changes from Revision * (June 2021) to Revision A (September 2022)	Page
• デバイスのステータスを「事前情報」から「量産データ」に変更	1

Copyright © 2022 Texas Instruments Incorporated

5 Pin Configuration and Functions

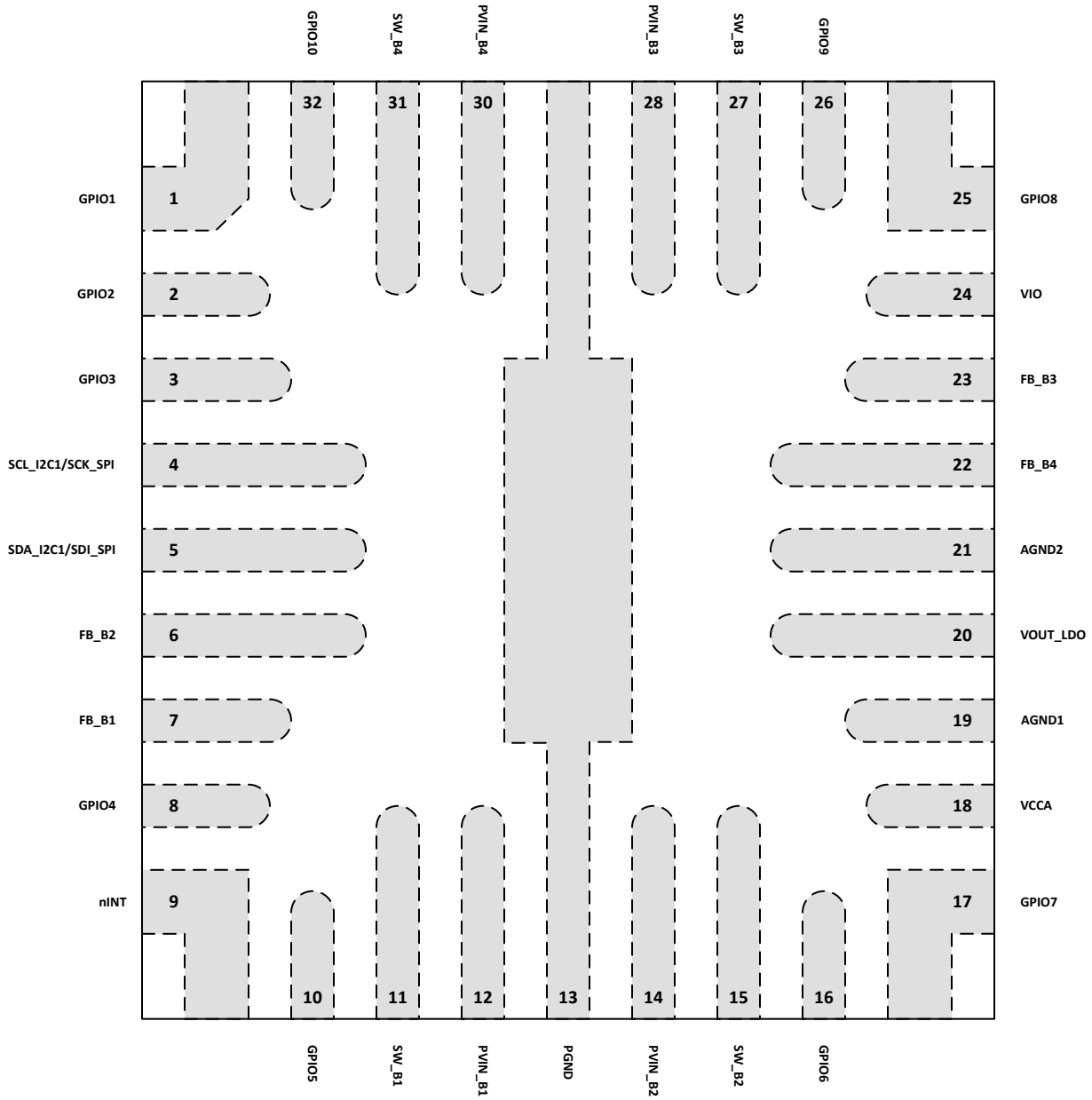

図 5-1. RQK Package 32-Pin VQFN-HR Top View

表 5-1. Pin Functions

PIN		I/O	TYPE	DESCRIPTION	CONNECTION IF NOT USED
NO.	NAME				
1	GPIO1	I/O	Digital	Primary function: General Purpose Input/Output signal. When configured as an output pin, it can be included as part of the power sequencer output signal to enable an external regulator.	Input: Ground, Output: Floating
		O	Digital	Alternative programmable function: EN_DRV - Enable Drive output pin to indicate the device entering safe state (set low when ENABLE_DRV bit is '0').	Floating
		O	Digital	Alternative programmable function: nRSTOUT_SOC - System reset or power on reset output (low = reset).	Floating
		O	Digital	Alternative programmable function: PGOOD - Programmable Power Good indication pin.	Floating
		I	Digital	Alternative programmable function: nSLEEP1 or nSLEEP2, which are the sleep request signals for the device to go to lower power states (Active Low).	Ground
		I	Digital	Alternative programmable function: WKUP1 or WKUP2, which are the wake-up request signals for the device to go to higher power states.	Ground
2	GPIO2	I/O	Digital	Primary function: General Purpose Input/Output signal. When configured as an output pin, it can be included as part of the power sequencer output signal to enable an external regulator.	Input: Ground, Output: Floating
		I	Digital	Alternative programmable function: SCL_I2C2 - Serial interface clock input for I2C access.	Ground
		I	Digital	Alternative programmable function: CS_SPI - Serial interface Chip Select signal for SPI access.	Ground
		I	Digital	Alternative programmable function: TRIG_WDOG - Trigger signal for trigger mode watchdog.	Ground
		I	Digital	Alternative programmable function: nSLEEP1 or nSLEEP2, which are the sleep request signals for the device to go to lower power states (Active Low).	Ground
		I	Digital	Alternative programmable function: WKUP1 or WKUP2, which are the wake-up request signals for the device to go to higher power states.	Ground
3	GPIO3	I/O	Digital	Primary function: General Purpose Input/Output signal. When configured as an output pin, it can be included as part of the power sequencer output signal to enable an external regulator.	Input: Ground, Output: Floating
		I/O	Digital	Alternative programmable function: SDA_I2C2 - Serial interface data input and output for I2C access.	Ground
		O	Digital	Alternative programmable function: SDO_SPI - Serial interface data output signal for SPI access.	Floating
		I	Digital	Alternative programmable function: nSLEEP1 or nSLEEP2, which are the sleep request signals for the device to go to lower power states (Active Low).	Ground
		I	Digital	Alternative programmable function: WKUP1 or WKUP2, which are the wake-up request signals for the device to go to higher power states.	Ground
4	SCL_I2C1/ SCK_SPI	I	Digital	If SPI is not used: SCL_I2C1 - Serial interface clock input for I2C access.	Ground
		I	Digital	If SPI is used: SCK_SPI - Serial interface clock input for SPI access.	Ground
5	SDA_I2C1/ SDI_SPI	I/O	Digital	If SPI is not used: SDA_I2C1 - Serial interface data input and output for I2C access.	Ground
		I	Digital	If SPI is used: SDI_SPI - Serial interface data input signal for SPI access.	Ground
6	FB_B2	—	Analog	Output voltage feedback (positive) for BUCK2.	Ground
7	FB_B1	—	Analog	Output voltage feedback (positive) for BUCK1.	Ground

Copyright © 2022 Texas Instruments Incorporated

表 5-1. Pin Functions (continued)

PIN		I/O	TYPE	DESCRIPTION	CONNECTION IF NOT USED
NO.	NAME				
8	GPIO4	I/O	Digital	Primary function: General Purpose Input/Output signal. When configured as an output pin, it can be included as part of the power sequencer output signal to enable an external regulator.	Input: Ground, Output: Floating
		I	Digital	Alternative programmable function: ENABLE - External power-on control.	Ground
		I	Digital	Alternative programmable function: TRIG_WDOG - Trigger signal for trigger mode watchdog.	Ground
		—	Analog	Alternative programmable function: BUCK1_VMON - Voltage monitoring input for BUCK1 regulator.	Ground
		I	Digital	Alternative programmable function: nSLEEP1 or nSLEEP2, which are the sleep request signals for the device to go to lower power states (Active Low).	Ground
		I	Digital	Alternative programmable function: WKUP1 or WKUP2, which are the wake-up request signals for the device to go to higher power states.	Ground
9	nINT	O	Digital	Open-drain interrupt output, active LOW.	Floating
10	GPIO5	I/O	Digital	Primary function: General Purpose Input/Output signal. When configured as an output pin, it can be included as part of the power sequencer output signal to enable an external regulator.	Input: Ground, Output: Floating
		I	Digital	Alternative programmable function: SYNCCLKIN - External switching clock input for Buck regulators.	Ground
		O	Digital	Alternative programmable function: SYNCCLKOUT - Switching clock output for external regulators.	Floating
		O	Digital	Alternative programmable function: nRSTOUT_SOC - System reset or power on reset output (low = reset).	Floating
		I	Digital	Alternative programmable function: nSLEEP1 or nSLEEP2, which are the sleep request signals for the device to go to lower power states (Active Low).	Ground
		I	Digital	Alternative programmable function: WKUP1 or WKUP2, which are the wake-up request signals for the device to go to higher power states.	Ground
11	SW_B1	—	Analog	BUCK1 switch node.	Floating
12	PVIN_B1	—	Power	Power input for BUCK1. The separate power pins PVIN_Bx are not connected together internally – PVIN_Bx and VCCA pins must be connected together in the application and be locally bypassed.	System supply
13	PGND	—	Ground	Power ground for Buck regulators.	Ground
14	PVIN_B2	—	Power	Power input for BUCK2. The separate power pins PVIN_Bx are not connected together internally – PVIN_Bx and VCCA pins must be connected together in the application and be locally bypassed.	System supply
15	SW_B2	—	Analog	BUCK2 switch node.	Floating
16	GPIO6	I/O	Digital	Primary function: General Purpose Input/Output signal. When configured as an output pin, it can be included as part of the power sequencer output signal to enable an external regulator.	Input: Ground, Output: Floating
		I	Digital	Alternative programmable function: nERR_MCU - System error count down input signal from the MCU.	Floating
		O	Digital	Alternative programmable function: SYNCCLKOUT - Switching clock output for external regulators.	Floating
		O	Digital	Alternative programmable function: PGOOD - Programmable Power Good indication pin.	Floating
		I	Digital	Alternative programmable function: nSLEEP1 or nSLEEP2, which are the sleep request signals for the device to go to lower power states (Active Low).	Ground
		I	Digital	Alternative programmable function: WKUP1 or WKUP2, which are the wake-up request signals for the device to go to higher power states.	Ground

Copyright © 2022 Texas Instruments Incorporated

表 5-1. Pin Functions (continued)

PIN		I/O	TYPE	DESCRIPTION	CONNECTION IF NOT USED
NO.	NAME				
17	GPIO7	I/O	Digital	Primary function: General Purpose Input/Output signal. When configured as an output pin, it can be included as part of the power sequencer output signal to enable an external regulator.	Input: Ground, Output: Floating
		I	Digital	Alternative programmable function: nERR_MCU - System error count down input signal from the MCU.	Floating
		O	Analog	Alternative programmable function: REFOUT - Buffered bandgap output.	Floating
		I	Analog	Alternative programmable function: VMON1 - External voltage monitoring input.	Ground
		I	Digital	Alternative programmable function: nSLEEP1 or nSLEEP2, which are the sleep request signals for the device to go to lower power states (Active Low).	Ground
		I	Digital	Alternative programmable function: WKUP1 or WKUP2, which are the wake-up request signals for the device to go to higher power states.	Ground
18	VCCA	—	Power	Supply voltage for internal LDO. VCCA and PVIN_Bx pins must be connected together in the application and be locally bypassed.	System supply
19	AGND1	—	Ground	Ground	Ground
20	VOUT_LDO	—	Power	LDO regulator filter node. LDO is used for internal purposes.	—
21	AGND2	—	Ground	Ground	Ground
22	FB_B4	—	Analog	Output voltage feedback (positive) for BUCK4.	Ground
23	FB_B3	—	Analog	Output voltage feedback (positive) for BUCK3.	Ground
24	VIO	—	Power	Supply voltage for selected digital outputs.	Ground
25	GPIO8	I/O	Digital	Primary function: General Purpose Input/Output signal. When configured as an output pin, it can be included as part of the power sequencer output signal to enable an external regulator.	Input: Ground, Output: Floating
		I/O	Digital	Alternative programmable function: SCLK_SPMI - Multi-PMIC SPMI serial interface clock signal. This pin is an output pin for the master SPMI device, and an input pin for the slave SPMI device.	Ground
		I	Analog	Alternative programmable function: VMON2 - External voltage monitoring input.	Ground
		I	Digital	Alternative programmable function: nSLEEP1 or nSLEEP2, which are the sleep request signals for the device to go to lower power states (Active Low).	Ground
		I	Digital	Alternative programmable function: WKUP1 or WKUP2, which are the wake-up request signals for the device to go to higher power states.	Ground
26	GPIO9	I/O	Digital	Primary function: General Purpose Input/Output signal. When configured as an output pin, it can be included as part of the power sequencer output signal to enable an external regulator.	Input: Ground, Output: Floating
		I/O	Digital	Alternative programmable function: SDATA_SPMI - Multi-PMIC SPMI serial interface bidirectional data signal	Floating
		O	Digital	Alternative programmable function: PGOOD - Programmable Power Good indication pin.	Floating
		I	Digital	Alternative programmable function: SYNCCLKIN - External switching clock input for Buck regulators.	Ground
		I	Digital	Alternative programmable function: nSLEEP1 or nSLEEP2, which are the sleep request signals for the device to go to lower power states (Active Low).	Ground
		I	Digital	Alternative programmable function: WKUP1 or WKUP2, which are the wake-up request signals for the device to go to higher power states.	Ground
27	SW_B3	—	Analog	BUCK3 switch node.	Floating
28	PVIN_B3	—	Power	Power input for BUCK3. The separate power pins PVIN_Bx are not connected together internally – PVIN_Bx and VCCA pins must be connected together in the application and be locally bypassed.	System supply
30	PVIN_B4	—	Power	Power input for BUCK4. The separate power pins PVIN_Bx are not connected together internally – PVIN_Bx and VCCA pins must be connected together in the application and be locally bypassed.	System supply

Copyright © 2022 Texas Instruments Incorporated

表 5-1. Pin Functions (continued)

PIN		I/O	TYPE	DESCRIPTION	CONNECTION IF NOT USED
NO.	NAME				
31	SW_B4	—	Analog	BUCK4 switch node.	Floating
32	GPIO10	I/O	Digital	Primary function: General Purpose Input/Output signal. When configured as an output pin, it can be included as part of the power sequencer output signal to enable an external regulator.	Input: Ground, Output: Floating
		O	Digital	Alternative programmable function: nRSTOUT - System reset or power on reset output (low = reset).	Floating
		O	Digital	Alternative programmable function: nRSTOUT_SOC - System reset or power on reset output (low = reset).	Floating
		I	Digital	Alternative programmable function: nSLEEP1 or nSLEEP2, which are the sleep request signals for the device to go to lower power states (Active Low).	Ground
		I	Digital	Alternative programmable function: WKUP1 or WKUP2, which are the wake-up request signals for the device to go to higher power states.	Ground

5.1 Digital Signal Descriptions

表 5-2. Signal Descriptions

SIGNAL NAME	I/O	Threshold Level	INPUT TYPE SELECTION		OUTPUT TYPE SELECTION		Internal PU/PD[2]	RECOMMENDED EXTERNAL PU/PD[3]	Control Registers
			Power Domain	DEGLITCH TIME[5]	Power Domain	Push-pull/ Open-drain[4]			
ENABLE (Selectable function of GPIO4 pin)[1]	Input	V_{IL}, V_{IH}	VINT	8 µs			400 kΩ SPU to VINT, or 400 kΩ SPD to GND	None	GPIO4_SEL GPIO4_DEGLITCH_EN GPIO4_PU_PD_EN GPIO4_PU_SEL ENABLE_POL
EN_DRV (Selectable function of GPIO1 pin)[1]	Output	$V_{OL_20\ mA}$			VCCA/ PVIN_B4	PP with 10kΩ PU to VCCA	10 kΩ PU to VCCA	None	GPIO1_SEL FORCE_EN_DRV_LOW ENABLE_DRV
SCL_I2C1 (Selectable function of SCL_I2C1/ SCK_SPI pin)[1]	Input	V_{IL}, V_{IH}	VINT	High-speed mode: 10 ns All other modes: 50 ns			None	PU to VIO	NVM-configuration[6] I2C1_HS
SDA_I2C1 (Selectable function of SDA_I2C1/ SDI_SPI pin)[1]	Input/ output	V_{IL}, V_{IH} $V_{OL_20\ mA}$	VINT	High-speed mode: 10 ns All other modes: 50 ns	VIO	OD	None	PU to VIO	NVM-configuration[6] I2C1_HS
SCL_I2C2 (Selectable function of GPIO2 pin)[1]	Input	V_{IL}, V_{IH}	VINT	High-speed mode: 10 ns All other modes: 50 ns			None	PU to VIO	NVM-configuration[6] GPIO2_SEL I2C2_HS
SDA_I2C2 (Selectable function of GPIO3 pin)[1]	Input/ output	V_{IL}, V_{IH} $V_{OL_20\ mA}$	VINT	High-speed mode: 10 ns All other modes: 50 ns	VIO	OD	None	PU to VIO	NVM-configuration[6] GPIO3_SEL I2C2_HS
SCK_SPI (Selectable function of SCL_I2C1/ SCK_SPI pin)[1]	Input	V_{IL}, V_{IH}	VINT	None			None	None	NVM-configuration[6]
SDI_SPI (Selectable function of SDA_I2C1/ SDI_SPI pin)[1]	Input	V_{IL}, V_{IH}	VINT	None			None	None	NVM-configuration[6]

Copyright © 2022 Texas Instruments Incorporated

表 5-2. Signal Descriptions (continued)

SIGNAL NAME	I/O	Threshold Level	INPUT TYPE SELECTION		OUTPUT TYPE SELECTION		Internal PU/PD[2]	RECOMMENDED EXTERNAL PU/PD[3]	Control Registers
			Power Domain	DEGLITCH TIME[5]	Power Domain	Push-pull/ Open-drain[4]			
CS_SPI (Selectable function of GPIO2 pin)[1]	Input	V_{IL}, V_{IH}	VINT	None			None	None	NVM-configuration[6] GPIO2_SEL
SDO_SPI (Selectable function of GPIO3 pin)[1]	Output	$V_{OL_20\ mA}$, $V_{OH(VIO)}$			VIO	PP / HiZ	None	None	NVM-configuration[6] GPIO3_SEL
SCLK_SPMI (Configurable function of GPIO8 pin)[1]	Input in Slave Mode Output in Master Mode	V_{IL}, V_{IH} $V_{OL_20\ mA}$ $V_{OH(VINT)}$	VINT	None	VINT	PP	400 kΩ SPD to GND	None	GPIO8_SEL GPIO8_PU_PD_EN NVM-configuration[6]
SDATA_SPMI (Configurable function of GPIO9 pin)[1]	Input/ output	V_{IL}, V_{IH} $V_{OL_20\ mA}$ $V_{OH(IO)}$	VINT	None	VINT	PP / HiZ	400 kΩ SPD to GND	None	GPIO9_SEL GPIO9_PU_PD_EN NVM-configuration[6]
nINT	Output	$V_{OL_20\ mA}$			VIO	OD	None	PU to VIO	
nRSTOUT(Configurable function of GPIO10 pin)[1]	Output	$V_{OL_20\ mA}$			VIO	PP with 10 kΩ PU to VIO or OD	10kΩ PU to VIO if configured as PP	PU to VIO or VCCA if Open-drain	GPIO10_SEL GPIO10_OD
nRSTOUT_SOC (Configurable function of GPIO1, GPIO5, GPIO10 pins)[1]	Output	$V_{OL_20\ mA}$			VIO	PP with 10kΩ PU to VIO or OD	10kΩ PU to VIO if configured as PP	PPU to VIO or VCCA if Open-drain	GPIO1_SEL GPIO1_OD GPIO5_SEL GPIO5_OD GPIO10_SEL GPIO10_OD
PGOOD (Configurable function of GPIO1, GPIO6, GPIO9 pins)[1]	Output	GPIO1: $V_{OL_20\ mA}$, $V_{OH(VIO)}$ GPIO6: $V_{OL_3\ mA}$, $V_{OH(VIO)}$ GPIO9: $V_{OL_20\ mA}$, $V_{OH(VINT)}$			VIO / VINT	PP or OD	None	PU to VIO if Open-drain	GPIO1_SEL GPIO1_OD GPIO6_SEL GPIO6_OD GPIO9_SEL GPIO9_OD PGOOD_POL PGOOD_WINDOW PGOOD_SEL_x

Copyright © 2022 Texas Instruments Incorporated

表 5-2. Signal Descriptions (continued)

SIGNAL NAME	I/O	Threshold Level	INPUT TYPE SELECTION		OUTPUT TYPE SELECTION		Internal PU/PD[2]	RECOMMENDED EXTERNAL PU/PD[3]	Control Registers
			Power Domain	DEGLITCH TIME[5]	Power Domain	Push-pull/ Open-drain[4]			
nERR_MCU (Configurable function of GPIO6, GPIO7 pins)[1]	Input	V_{IL}, V_{IH}	VINT	8 µs			400 kΩ PD to GND	None	GPIO6_SEL GPIO7_SEL
TRIG_WDOG (Configurable function of GPIO2, GPIO4 pins)[1]	Input	V_{IL}, V_{IH}	VINT	30 µs			400 kΩ SPD to GND	None	GPIO2_SEL GPIO2_PU_PD_EN GPIO4_SEL GPIO4_PU_PD_EN
nSLEEP1 (Configurable function of all GPIO pins)[1]	Input	V_{IL}, V_{IH}	VINT	8 µs			GPIO4, 7, 8 or 9: 400 kΩ SPU to VINT GPIO1, 2, 3, 5, 6, or 10: 400 kΩ SPU to VIO	None	GPIOx_SEL GPIOx_PU_PD_EN
nSLEEP2 (Configurable function of all GPIO pins)[1]	Input	V_{IL}, V_{IH}	VINT	8 µs			GPIO4, 7, 8 or 9: 400 kΩ SPU to VINT GPIO1, 2, 3, 5, 6, or 10: 400 kΩ SPU to VIO	None	GPIOx_SEL GPIOx_PU_PD_EN
WKUP1 (Configurable function of all GPIO pins)[1]	Input	V_{IL}, V_{IH}	VINT	8 µs			GPIO4, 7, 8 or 9: 400 kΩ SPU to VINT 400 kΩ SPD to GND GPIO1, 2, 3, 5, 6, or 10: 400 kΩ SPU to VIO 400 kΩ SPD to GND	None	GPIOx_SEL GPIOx_DEGLITCH_EN GPIOx_PU_PD_EN GPIOx_PU_SEL
WKUP2 (Configurable function of all GPIO pins)[1]	Input	V_{IL}, V_{IH}	VINT	8 µs			GPIO4, 7, 8 or 9: 400 kΩ SPU to VINT 400 kΩ SPD to GND GPIO1, 2, 3, 5, 6, or 10: 400 kΩ SPU to VIO 400 kΩ SPD to GND	None	GPIOx_SEL GPIOx_DEGLITCH_EN GPIOx_PU_PD_EN GPIOx_PU_SEL
GPIO1 (Configurable function of GPIO1 pin)[1]	Input/ output	V_{IL}, V_{IH} $V_{OL_20\ mA}$ $V_{OH(VIO)}$	VINT	8 µs	VIO	PP or OD	400 kΩ SPU to VIO 400 kΩ SPD to GND	PU to VIO or VCCA if Open-drain	GPIO1_SEL GPIO1_DEGLITCH_EN GPIO1_PU_PD_EN GPIO1_PU_SEL GPIO1_OD GPIO1_DIR

Copyright © 2022 Texas Instruments Incorporated

表 5-2. Signal Descriptions (continued)

SIGNAL NAME	I/O	Threshold Level	INPUT TYPE SELECTION		OUTPUT TYPE SELECTION		Internal PU/PD[2]	RECOMMENDED EXTERNAL PU/PD[3]	Control Registers
			Power Domain	DEGLITCH TIME[5]	Power Domain	Push-pull/ Open-drain[4]			
GPIO2 (Configurable function of GPIO2 pin)[1]	Input/ output	V_{IL}, V_{IH} $V_{OL_3\ mA}$ $V_{OH(VIO)}$	VINT	8 µs	VIO	PP or OD	400 kΩ SPU to VIO 400 kΩ SPD to GND	PU to VIO or VCCA if Open-drain	GPIO2_SEL GPIO2_DEGLITCH_EN GPIO2_PU_PD_EN GPIO2_PU_SEL GPIO2_OD GPIO2_DIR
GPIO3 (Configurable function of GPIO3 pin)[1]	Input/ output	V_{IL}, V_{IH} $V_{OL_20\ mA}$ $V_{OH(VIO)}$	VINT	8 µs	VIO	PP or OD	400 kΩ SPU to VIO 400 kΩ SPD to GND	PU to VIO or VCCA if Open-drain	GPIO3_SEL GPIO3_DEGLITCH_EN GPIO3_PU_PD_EN GPIO3_PU_SEL GPIO3_OD GPIO3_DIR
GPIO4 (Configurable function of GPIO4 pin)[1]	Input/ output	V_{IL}, V_{IH} $V_{OL_3\ mA}$ $V_{OH(VINT)}$	VINT	8 µs	VINT	PP or OD	400 kΩ SPU to VINT 400 kΩ SPD to GND	PU to VIO if Open-drain	GPIO4_SEL GPIO4_DEGLITCH_EN GPIO4_PU_PD_EN GPIO4_PU_SEL GPIO4_OD GPIO4_DIR
GPIO5 (Configurable function of GPIO5 pin)[1]	Input/ output	V_{IL}, V_{IH} $V_{OL_20\ mA}$ $V_{OH(VIO)}$	VINT	8 µs	VIO	PP or OD	400 kΩ SPU to VIO 400 kΩ SPD to GND	PU to VIO or VCCA if Open-drain	GPIO5_SEL GPIO5_DEGLITCH_EN GPIO5_PU_PD_EN GPIO5_PU_SEL GPIO5_OD GPIO5_DIR
GPIO6 (Configurable function of GPIO6 pin)[1]	Input/ output	V_{IL}, V_{IH} $V_{OL_3\ mA}$ $V_{OH(VIO)}$	VINT	8 µs	VIO	PP or OD	400 kΩ SPU to VIO 400 kΩ SPD to GND	PU to VIO or VCCA if Open-drain	GPIO6_SEL GPIO6_DEGLITCH_EN GPIO6_PU_PD_EN GPIO6_PU_SEL GPIO6_OD GPIO6_DIR
GPIO7 (Configurable function of GPIO7 pin)[1]	Input/ output	V_{IL}, V_{IH} $V_{OL_3\ mA}$ $V_{OH(VINT)}$	VINT	8 µs	VINT	PP or OD	400 kΩ SPU to VINT 400 kΩ SPD to GND	PU to VIO if Open-drain	GPIO7_SEL GPIO7_DEGLITCH_EN GPIO7_PU_PD_EN GPIO7_PU_SEL GPIO7_OD GPIO7_DIR
GPIO8 (Configurable function of GPIO8 pin)[1]	Input/ output	V_{IL}, V_{IH} $V_{OL_20\ mA}$ $V_{OH(VINT)}$	VINT	8 µs	VINT	PP or OD	400 kΩ SPU to VINT 400 kΩ SPD to GND	PU to VIO if Open-drain	GPIO8_SEL GPIO8_DEGLITCH_EN GPIO8_PU_PD_EN GPIO8_PU_SEL GPIO8_OD GPIO8_DIR

Copyright © 2022 Texas Instruments Incorporated

表 5-2. Signal Descriptions (continued)

SIGNAL NAME	I/O	Threshold Level	INPUT TYPE SELECTION		OUTPUT TYPE SELECTION		Internal PU/PD[2]	RECOMMENDED EXTERNAL PU/PD[3]	Control Registers
			Power Domain	DEGLITCH TIME[5]	Power Domain	Push-pull/ Open-drain[4]			
GPIO9 (Configurable function of GPIO9 pin)[1]	Input/ output	V_{IL}, V_{IH} $V_{OL_20\ mA}$ $V_{OH(VINT)}$	VINT	8 µs	VINT	PP or OD	400 kΩ SPU to VINT 400 kΩ SPD to GND	PU to VIO if Open-drain	GPIO9_SEL GPIO9_DEGLITCH_EN GPIO9_PU_PD_EN GPIO9_PU_SEL GPIO9_OD GPIO9_DIR
GPIO10 (Configurable function of GPIO10 pin)[1]	Input/ output	V_{IL}, V_{IH} $V_{OL_20\ mA}$ $V_{OH(VIO)}$	VINT	8 µs	VIO	PP or OD	400 kΩ SPU to VIO 400 kΩ SPD to GND	PU to VIO or VCCA if Open-drain	GPIO10_SEL GPIO10_DEGLITCH_EN GPIO10_PU_PD_EN GPIO10_PU_SEL GPIO10_OD GPIO10_DIR
SYNCCLKIN (Configurable function of GPIO5, GPIO9 pins)[1]	Input	V_{IL}, V_{IH}	VINT	None			400 kΩ SPD to GND	None	GPIO5_SEL GPIO5_PU_PD_EN GPIO9_SEL GPIO9_PU_PD_EN
SYNCCLKOUT (Configurable function of GPIO5, GPIO6 pins)[1]	Output	GPIO5: $V_{OL_20\ mA}$, $V_{OH(VIO)}$ GPIO6: $V_{OL_3\ mA}$, $V_{OH(VIO)}$			VIO	PP	None	None	GPIO5_SEL GPIO6_SEL
VMON1 (Configurable function of GPIO7 pin)[1]	Input	Analog					None	None	GPIO7_SEL VMON1_EN VMON1_RANGE_SEL
VMON2 (Configurable function of GPIO8 pin)[1]	Input	Analog					None	None	GPIO8_SEL VMON2_EN VMON2_RANGE_SEL
BUCK1_VMON (Configurable function of GPIO4 pin)[1]	Input	Analog					None	None	GPIO4_SEL BUCK1_ VMON_EN
REFOUT (Configurable function of GPIO7 pin)[1]	Output	Analog					400 kΩ PD to GND when REFOUT_EN = 0		GPIO7_SEL REFOUT_EN

(1) Configurable function through NVM register setting.
(2) PU = Pullup, PD = Pulldown, SPU = Software-configurable pullup, SPD = Software-configurable pulldown.

Copyright © 2022 Texas Instruments Incorporated

(3) The internal pull-up and pull-down resistors are automatically disabled when the device is configured as a push-pull output pin unless otherwise noted.
(4) PP = Push-pull, OD = Open-drain.
(5) Deglitch time is only applicable when option is enabled.
(6) NVM-configuration for I2C/SPI and SPMI cannot be overwritten during operation.

6 Specifications

6.1 Absolute Maximum Ratings

Over operating free-air temperature range (unless otherwise noted). Voltage level refers to the AGNDx ground of the device. (1)

POS			MIN	MAX	UNIT
M1.1	Voltage on supply input pin	VCCA	–0.3	6	V
M1.2	Voltage on all buck supply voltage input pins	PVIN_Bx	–0.3	6	V
M1.3	Voltage difference between supply input pins	Between VCCA and each PVIN_Bx	–0.5	0.5	V
M1.4a	Voltage on all buck switch nodes	SW_Bx pins	-0.3	V_{PVIN_Bx} + 0.3 V, up to 6 V	V
M1.4b	Voltage on all buck switch nodes	SW_Bx pins, 10-ns transient	–2	10	V
M1.5	Voltage on all buck voltage sense nodes	FB_Bx	–0.3	4	V
M1.6	Voltage on all buck power ground pins	PGND	–0.3	0.3	V
M1.7	Voltage on internal LDO output pin	VOUT_LDO	–0.3	2	V
M1.8	Voltage on I/O supply pin	VIO	–0.3	6	V
M1.9	Voltage on logic pins (input or output)	I^2C and SPI pins, nINT pin, and all GPIO pins	–0.3	6	V
M1.13a	Voltage rise slew-rate on input supply pins	VCCA, PVIN_Bx (voltage below 2.7 V)		60	mV/µs
M1.13b		VIO (only when VCCA < 2 V)		60	
M1.10a	Peak output current	All pins other than power resources		20	mA
M1.10b		Buck regulators: PVIN_Bx, SW_Bx, and PGNDx per phase		6	A
M1.10c	Average output current, 100 k hour, T_J = 125°C	GPIOx pins, source current		3	mA
M1.10d		GPIO1/3/5/8/9/10, SDA_I2C1/SDI_SPI and nINT pins, sink current		8	
M1.10e		GPIO2/4/6/7 pins, sink current		3	
M1.10f		Buck regulators		3.5	A
M1.11	Junction temperature, T_J		–45	160	°C
M1.12	Storage temperature, T_{stg}		–65	150	°C

(1) Operation outside the *Absolute Maximum Ratings* may cause permanent device damage. *Absolute Maximum Ratings* do not imply functional operation of the device at these or any other conditions beyond those listed under *Recommended Operating Conditions*. If used outside the *Recommended Operating Conditions* but within the *Absolute Maximum Ratings*, the device may not be fully functional, and this may affect device reliability, functionality, performance, and shorten the device lifetime.

6.2 ESD Ratings

POS				VALUE	UNIT
M1.13	$V_{(ESD)}$	Electrostatic discharge	Human-body model (HBM), per AEC Q100-002(1)	±2000	V
M1.14	$V_{(ESD)}$	Electrostatic discharge	Charged-device model (CDM), per AEC Q100-011	±500	V

(1) AEC Q100-002 indicates that HBM stressing must be in accordance with the ANSI/ESDA/JEDEC JS-001 specification.

Copyright © 2022 Texas Instruments Incorporated

6.3 Recommended Operating Conditions

Over operating free-air temperature range (unless otherwise noted). Voltage level refers to the AGNDx ground of the device.

POS			MIN	NOM	MAX	UNIT
R1.1	Voltage on supply input pin	VCCA	2.8	3.3	5.5	V
R1.2	Voltage on all buck supply input pins	PVIN_Bx	2.8	3.3	5.5	V
R1.3	Voltage difference between supply input pins	Between VCCA and each PVIN_Bx	–0.2		0.2	V
R1.4	Voltage on all buck switch nodes	SW_Bx pins	0		5.5	V
R1.5	Voltage on all buck voltage sense nodes	FB_Bx	0		$V_{OUT(BUCKx)max}$	V
R1.6	Voltage on all buck power ground pins	Between PGND and AGNDx		0		V
R1.7	Voltage on internal LDO output pin	VOUT_LDO	1.65		1.95	V
R1.8a	Voltage on I/O supply pin	V_{VIO} = 1.8 V	1.7	1.8	1.9	V
R1.8b		V_{VIO} = 3.3 V	3.135	3.3	V_{VCCA}, up to 3.465V	
R1.9	Voltage on logic pins (input) (2)		0		5.5	
R1.10a	Voltage on logic pins (output, push-pull) in VIO domain (2)		0		V_{VIO}	V
R1.10b	Voltage on logic pins (output, push-pull) in LDOVINT domain (2)		0		V_{VOUT_LDO}	V
R1.10c	Voltage on logic pins (output, open-drain) (2)		0		5.5	
R1.11	Voltage on logic pins (output) in VCCA domain	EN_DRV	0		V_{VCCA} / V_{VIO} (3)	
R1.12	Voltage on AGND ground pins	AGND1 and AGND2		0		V
R1.13	Operating free-air temperature(1)		–40	25	125	°C
R1.14	Junction temperature, T_J	Operational	–40	25	150	°C

(1) Additional cooling strategies may be necessary to keep junction temperature at recommended limits.
(2) Internal pull-up resistor is disabled if pin voltage is above V_{VOUT_LDO} (LDOVINT domain pins) or V_{VIO} (VIO domain pins)
(3) V_{VCCA} or V_{VIO}, whichever has lower voltage.

6.4 Thermal Information

THERMAL METRIC(1)		LP876x-Q1 RQK (VQFN-HR) 32 PINS	UNIT
$R_{\theta JA}$	Junction-to-ambient thermal resistance	30.5	°C/W
$R_{\theta JC(top)}$	Junction-to-case (top) thermal resistance	9.0	°C/W
$R_{\theta JB}$	Junction-to-board thermal resistance	6.0	°C/W
ψ_{JT}	Junction-to-top characterization parameter	0.2	°C/W
ψ_{JB}	Junction-to-board characterization parameter	5.8	°C/W
$R_{\theta JC(bot)}$	Junction-to-case (bottom) thermal resistance	7.5	°C/W

(1) For more information about traditional and new thermal metrics, see the *Semiconductor and ICPackage Thermal Metrics* application report.

6.5 Internal Low Drop-Out Regulators (LDOVINT)

Over operating free-air temperature range, V_{VCCA} = 3.3 V (unless otherwise noted). Voltage level refers to the AGNDx ground of the device.

POS	PARAMETER		TEST CONDITIONS	MIN	TYP	MAX	UNIT
Electrical Characteristics							
2.1	$C_{OUT(LDOVINT)}$	Output filtering capacitance(1)	Connected from VOUT_LDO to AGNDx	1	2.2	4	µF
2.3	$V_{OUT(LDOVINT)}$	LDOVINT output voltage			1.8		V
2.7	$I_{Qon(LDOVINT)}$	Quiescent current, on mode	LDOVINT under valid operating condition, I_{LOAD} = 0 mA		3	10	µA
2.8	$R_{DIS(LDOVINT)}$	Pulldown discharge resistance at LDOVINT output	Off mode, pulldown enabled and LDO disabled	60	125	190	Ω

(1) When DC voltage is applied to a ceramic capacitor, the effective capacitance is reduced due to DC bias effect. The table above therefore lists the minimum value as CAPACITANCE. In order to meet the minimum capacitance requirement, the nominal value of the capacitor may have to be scaled accordingly to take the drop of capacitance into account for a given dc voltage at the outputs of regulators.

6.6 BUCK1, BUCK2, BUCK3, and BUCK4 Regulators

Over operating free-air temperature range (unless otherwise noted). Voltage level refers to the AGNDx ground of the device.

POS	PARAMETER		TEST CONDITIONS	MIN	TYP	MAX	UNIT
Electrical Characteristics - Output Voltage							
3.1b	$V_{VOUT_Bx_Step}$	Output voltage programmable step size	0.9 V ≤ V_{VOUT_Bx} < 1.1 V		5		mV
3.1c			1.1 V ≤ V_{VOUT_Bx} < 1.66 V		10		
3.1d			1.66 V ≤ V_{VOUT_Bx} ≤ 1.9 V		20		
3.3		Input and output voltage difference	Minimum voltage between PVIN_Bx and VOUT_Bx to fulfill the electrical characteristics	0.7			V
3.4a	$V_{VOUT_Bx_Slew_Rate}$	Output voltage slew-rate programmable range(5) (6) (8)	BUCKn_SLEW_RATE[2:0] = 000b	26.6	33.3	36.6	mV/µs
3.4b			BUCKn_SLEW_RATE[2:0] = 001b	17	20	22	
3.4c			BUCKn_SLEW_RATE[2:0] = 010b	9	10	11	
3.4d			BUCKn_SLEW_RATE[2:0] = 011b	4.5	5	5.5	
3.4e			BUCKn_SLEW_RATE[2:0] = 100b	2.25	2.5	2.75	
3.4f			BUCKn_SLEW_RATE[2:0] = 101b	1.12	1.25	1.38	
3.4g			BUCKn_SLEW_RATE[2:0] = 110b	0.56	0.625	0.69	
3.4h			BUCKn_SLEW_RATE[2:0] = 111b	0.281	0.3125	0.344	
Electrical Characteristics - Output Current, Limits and Thresholds							
3.6e	I_{OUT_Bx}	Output current(3) (4)	Buck1			2	A
3.6f			Buck2			4	
3.6g			Buck3 / Buck4			3	
3.8	$I_{LIM\ FWD\ PEAK\ Range}$	Forward current limit (peak during each switching cycle) Programmable range		2.5		6.5	A
3.9	$I_{LIM\ FWD\ PEAK\ Step}$	Forward current limit step Size			1		A
3.10a	$I_{LIM\ FWD\ PEAK\ Accuracy}$	Forward current limit accuracy	I_{LIM} = 2.5 A, 3.5 A, 4.5 A, 3.0 V ≤ V_{PVIN_Bx} ≤ 5.5 V	-0.55		0.55	A
3.10b			I_{LIM} = 5.5 A, 6.5 A 4.5 V ≤ V_{PVIN_Bx} ≤ 5.5 V	–10%		10%	
3.10c			I_{LIM} = 5.5 A, 6.5 A 3.0 V ≤ V_{PVIN_Bx} ≤ 4.5 V	–15%		10%	
3.11	$I_{LIM\ NEG}$	Negative current limit (peak during each switching cycle)		1.5	2	2.6	A
Electrical Characteristics - Current Consumption, On Resistance, and Output Pulldown Resistance							

Copyright © 2022 Texas Instruments Incorporated

6.6 BUCK1, BUCK2, BUCK3, and BUCK4 Regulators (continued)

Over operating free-air temperature range (unless otherwise noted). Voltage level refers to the AGNDx ground of the device.

POS	PARAMETER		TEST CONDITIONS	MIN	TYP	MAX	UNIT
3.17	I_{off}	Shutdown current, BUCKx disabled			1		µA
3.19	$R_{DS(ON)\ HS\ FET}$	On-resistance, high-side FET	I_{OUT_Bx} = 1 A		26	65	mΩ
3.20	$R_{DS(ON)\ LS\ FET}$	On-resistance, low-side FET	I_{OUT_Bx} = 1 A		16	35	mΩ
3.21	R_{DIS_Bx}	Output pulldown discharge resistance	Regulator disabled, per phase, BUCKx_PLDN = 1, between SW_Bx and PGND pins	50	100	150	Ω
3.21b	$V_{TH_SC_RV_Bx}$	Threshold voltage for Short Circuit and Residual Voltage Detection		140	150	160	mV
3.22	R_{SW_SC}	Resistance threshold for Short circuit detection at the SW pin		3	5	25	Ω
Electrical Characteristics - 8.8MHz Single-Phase Configuration							
3.96	V_{PVIN_Bx}	Input voltage range		3.0	3.3	5.5	V
3.97a	V_{VOUT_Bx}	Output voltage programmable range	I_{OUT_Bx} ≤ 3 A	0.9		1.9	V
3.97b			I_{OUT_Bx} ≤ 4 A	0.9		1.4	
3.98	C_{IN_Bx}	Input filtering capacitance(1) (2)		3	22		µF
3.99a	$C_{OUT\text{-}Local_Bx}$	Output capacitance, local with filter(2)		24	44	106	µF
3.99b	$C_{OUT\text{-}Filter_Bx}$	Output capacitance, after filter(2)	Capacitance after every filter	20	33	80	µF
3.99c	$C_{OUT\text{-}No_Filter_Bx}$	Output capacitance, no filter(2)		24	44	106	µF
3.100a	L_{Bx}	Power inductor	Inductance	329	470	611	nH
3.100b			DCR		10		mΩ
3.100c	L_{Ext}	Filter1	Inductor, 100nH	70	100	130	nH
3.100d	L_{Ext}	Filter2	Ferrite, MPZ2012S300A				
3.101	I_{Q_PWM}	PWM mode Quiescent current	I_{OUT_Bx} = 0 mA		30		mA
3.167a	$V_{OUT_DC_Bx}$	DC output voltage accuracy, includes voltage reference, DC load and line regulations and temperature	V_{VOUT_Bx} < 1 V, PWM mode	–10		10	mV
3.167b			V_{VOUT_Bx} ≥ 1 V, PWM mode	–1%		1%	
3.103a	T_{LDSR}	Transient load step response, 1V8(7)	C_{Local} as in Pos3.99a, no additional filter: V_{VOUT_Bx} = 1.8 V, I_{OUT_Bx} = 0.5 A to 1.8 A, $t_r = t_f$ = 4 µs		18		mV
3.103c		Transient load step response, 1V2(7)	C_{Local} as in Pos3.99a, no additional filter: V_{VOUT_Bx} = 1.2 V, I_{OUT_Bx} = 1.95 A to 3 A, $t_r = t_f$ = 1 µs		20		
3.103e		Transient load step response, 1V0(7)	C_{Local} as in Pos3.99a, no additional filter: V_{VOUT_Bx} = 1.0 V, I_{OUT_Bx} = 0 A to 2.5 A, $t_r = t_f$ = 4 µs		34		
3.104	T_{LNSR}	Transient line response, no filter	V_{PVIN_Bx} stepping between 3 V and 3.5 V or between 4.8 V and 5.3 V, $t_r = t_f$ = 10 µs, $I_{OUT_Bx} = I_{OUT(max)}$	-25	±5	25	mV
3.105	V_{OUT_Ripple}	Ripple voltage(7)	PWM mode		4		mV_{PP}
Timing Requirements							
3.108		Settling time after voltage scaling	From end of voltage ramp to V_{OUT} within 15 mV from $V_{OUT_DC_Bx}$ (9)			105	µs
3.109		Start-up delay	From enable to start of output voltage rise	100	150	200	µs

6.6 BUCK1, BUCK2, BUCK3, and BUCK4 Regulators (continued)

Over operating free-air temperature range (unless otherwise noted). Voltage level refers to the AGNDx ground of the device.

POS	PARAMETER		TEST CONDITIONS	MIN	TYP	MAX	UNIT
3.110	t_{delay_OC}	Over-current detection delay	Peak current limit triggering during every switching cycle			7	µs
3.111	$t_{deglitch_OC}$	Over-current detection signal deglitch time	Digital deglitch time for detected signal. Time duration to filter out short positive and negative pulses	19		23	µs
3.112	$t_{latency_OC}$	Over-current signal latency time from detection	Total delay from over-current detection to interrupt or PFSM trigger			30	µs
Switching Characteristics							
3.106c	f_{SW}	Switching frequency, PWM mode NVM programmable	8.8 MHz setting, internal clock	8	8.8	9.6	MHz
3.106f			8.8 MHz setting, internal clock, spread spectrum enabled	7.0	8.8	10.6	
3.106i			8.8 MHz setting, synchronized to external clock	7.0	8.8	10.6	

(1) Input capacitors must be placed as close as possible to the device pins.
(2) When DC voltage is applied to a ceramic capacitor, the effective capacitance is reduced due to DC bias effect. The table above therefore lists the minimum value as CAPACITANCE. In order to meet the minimum capacitance requirement, the nominal value of the capacitor may have to be scaled accordingly to take the drop of capacitance into account for a given dc voltage at the outputs of regulators.
(3) The maximum output current can be limited by the forward current limit $I_{LIM\ FWD}$. The maximum output current is also limited by the junction temperature and maximum average current over lifetime. The power dissipation inside the die increases the junction temperature and limits the maximum current depending of the length of the current pulse, efficiency, board and ambient temperature.
(4) Advance thermal design is required to avoid thermal shutdown.
(5) SLEW_RATEx[2:0] register default comes from NVM memory, and can be re-programed by software. Output capacitance, forward and negative current limits and load current may limit the maximum and minimum slew rates.
(6) A high slew-rate setting can generate over and undershoot during voltage change. See Application Section for more information.
(7) Please refer to the applications section of the data sheet regarding the power delivery network (PDN) used for the transient load step and output ripple test conditions. All ripple specs are defined across POL capacitor in the described PDN.
(8) Slew-rate is measured from 10% to 90% of the voltage ramp with voltage step ≥ 500 mV.
(9) Voltage ramp is calculated using slew-rate from minimum column.

6.7 Reference Generator (REFOUT)

Over operating free-air temperature range (unless otherwise noted). Voltage level refers to the AGNDx ground of the device.

POS	PARAMETER		TEST CONDITIONS	MIN	TYP	MAX	UNIT
Electrical Characteristics							
4.1		Max capacitance for REFOUT signal	Capacitance between REFOUT signal and ground			100	pF
4.2		Output voltage	Measured at the REFOUT signal	1.17	1.2	1.23	V
Timing Requirements							
4.4	t_{SU_REF}	Start-up time	From REFOUT_EN=1 to the time REFOUT voltage settles		30		µs

6.8 Monitoring Functions

Over operating free-air temperature range (unless otherwise noted). Voltage level refers to the AGNDx ground of the device.

POS	PARAMETER	TEST CONDITIONS	MIN	TYP	MAX	UNIT
Electrical Characteristics: BUCK REGULATORS OUTPUT, VMONx INPUT						

Copyright © 2022 Texas Instruments Incorporated

6.8 Monitoring Functions (continued)

Over operating free-air temperature range (unless otherwise noted). Voltage level refers to the AGNDx ground of the device.

POS	PARAMETER		TEST CONDITIONS	MIN	TYP	MAX	UNIT
5.1a	$V_{BUCK_OV_TH}$, $V_{VMON_OV_TH}$	Overvoltage monitoring for buck output and VMONx pin input, programable threshold accuracy, V_{OUT_Bx} / V_{VMONx} > 1 V[1]	BUCKn_OV_THR / VMONn_OV_THR = 0x0, VMONn_RANGE_SEL = 0	2%	3%	4%	
5.1b			BUCKn_OV_THR / VMONn_OV_THR = 0x1, VMONn_RANGE_SEL = 0	2.5%	3.5%	4.5%	
5.1c			BUCKn_OV_THR / VMONn_OV_THR = 0x2, VMONn_RANGE_SEL = 0	3%	4%	5%	
5.1d			BUCKn_OV_THR / VMONn_OV_THR = 0x3, VMONn_RANGE_SEL = 0	4%	5%	6%	
5.1e			BUCKn_OV_THR / VMONn_OV_THR = 0x4, VMONn_RANGE_SEL = 0	5%	6%	7%	
5.1f			BUCKn_OV_THR / VMONn_OV_THR = 0x5, VMONn_RANGE_SEL = 0	6%	7%	8%	
5.1g			BUCKn_OV_THR / VMONn_OV_THR = 0x6, VMONn_RANGE_SEL = 0	7%	8%	9%	
5.1h			BUCKn_OV_THR / VMONn_OV_THR = 0x7, VMONn_RANGE_SEL = 0	9%	10%	11%	
5.2a	$V_{BUCK_OV_TH_mv}$, $V_{VMON_OV_TH_mv}$	Overvoltage monitoring for buck output and VMONx pin input, programable threshold accuracy, V_{OUT_Bx} / V_{VMONx} ≤ 1 V[1]	BUCKn_OV_THR / VMONn_OV_THR = 0x0, VMONn_RANGE_SEL = 0	20	30	40	mV
5.2b			BUCKn_OV_THR / VMONn_OV_THR = 0x1, VMONn_RANGE_SEL = 0	25	35	45	
5.2c			BUCKn_OV_THR / VMONn_OV_THR = 0x2, VMONn_RANGE_SEL = 0	30	40	50	
5.2d			BUCKn_OV_THR / VMONn_OV_THR = 0x3, VMONn_RANGE_SEL = 0	40	50	60	
5.2e			BUCKn_OV_THR / VMONn_OV_THR = 0x4, VMONn_RANGE_SEL = 0	50	60	70	
5.2f			BUCKn_OV_THR / VMONn_OV_THR = 0x5, VMONn_RANGE_SEL = 0	60	70	80	
5.2g			BUCKn_OV_THR / VMONn_OV_THR = 0x6, VMONn_RANGE_SEL = 0	70	80	90	
5.2h			BUCKn_OV_THR / VMONn_OV_THR = 0x7, VMONn_RANGE_SEL = 0	90	100	110	
5.3a	$V_{BUCK_UV_TH}$, $V_{VMON_UV_TH}$	Undervoltage monitoring for buck output and VMONx pin input, programable threshold accuracy, V_{OUT_Bx} / V_{VMONx} > 1 V[1]	BUCKn_UV_THR / VMONn_UV_THR = 0x0, VMONn_RANGE_SEL = 0	–4%	–3%	–2%	
5.3b			BUCKn_UV_THR / VMONn_UV_THR = 0x1, VMONn_RANGE_SEL = 0	–4.5%	–3.5%	–2.5%	
5.3c			BUCKn_UV_THR / VMONn_UV_THR = 0x2, VMONn_RANGE_SEL = 0	–5%	–4%	–3%	
5.3d			BUCKn_UV_THR / VMONn_UV_THR = 0x3, VMONn_RANGE_SEL = 0	–6%	–5%	–4%	
5.3e			BUCKn_UV_THR / VMONn_UV_THR = 0x4, VMONn_RANGE_SEL = 0	–7%	–6%	–5%	
5.3f			BUCKn_UV_THR / VMONn_UV_THR = 0x5, VMONn_RANGE_SEL = 0	–8%	–7%	–6%	
5.3g			BUCKn_UV_THR / VMONn_UV_THR = 0x6, VMONn_RANGE_SEL = 0	–9%	–8%	–7%	
5.3h			BUCKn_UV_THR / VMONn_UV_THR = 0x7, VMONn_RANGE_SEL = 0	–11%	–10%	–9%	

Copyright © 2022 Texas Instruments Incorporated

6.8 Monitoring Functions (continued)

Over operating free-air temperature range (unless otherwise noted). Voltage level refers to the AGNDx ground of the device.

POS	PARAMETER		TEST CONDITIONS	MIN	TYP	MAX	UNIT
5.4a	$V_{BUCK_UV_TH_mv}$, $V_{VMON_UV_TH_mv}$	Undervoltage monitoring for buck output and VMONx pin input, programable threshold accuracy, V_{OUT_Bx} / V_{VMONx} ≤ 1 V[1]	BUCKn_UV_THR / VMONn_UV_THR = 0x0, VMONn_RANGE_SEL = 0	–40	–30	–20	mV
5.4b			BUCKn_UV_THR / VMONn_UV_THR = 0x1, VMONn_RANGE_SEL = 0	–45	–35	–25	
5.4c			BUCKn_UV_THR / VMONn_UV_THR = 0x2, VMONn_RANGE_SEL = 0	–50	–40	–30	
5.4d			BUCKn_UV_THR / VMONn_UV_THR = 0x3, VMONn_RANGE_SEL = 0	–60	–50	–40	
5.4e			BUCKn_UV_THR / VMONn_UV_THR = 0x4, VMONn_RANGE_SEL = 0	–70	–60	–50	
5.4f			BUCKn_UV_THR / VMONn_UV_THR = 0x5, VMONn_RANGE_SEL = 0	–80	–70	–60	
5.4g			BUCKn_UV_THR / VMONn_UV_THR = 0x6, VMONn_RANGE_SEL = 0	–90	–80	–70	
5.4h			BUCKn_UV_THR / VMONn_UV_THR = 0x7, VMONn_RANGE_SEL = 0	–110	–100	–90	
5.5a	$V_{VMON_OV_TH2}$	Overvoltage monitoring for VMONx pin input with extended range[1]	VMONn_OV_THR = 0x0, VMONn_RANGE_SEL = 1	100	150	200	mV
5.5b			VMONn_OV_THR = 0x1, VMONn_RANGE_SEL = 1	125	175	225	
5.5c			VMONn_OV_THR = 0x2, VMONn_RANGE_SEL = 1	150	200	250	
5.5d			VMONn_OV_THR = 0x3, VMONn_RANGE_SEL = 1	200	250	300	
5.5e			VMONn_OV_THR = 0x4, VMONn_RANGE_SEL = 1	250	300	350	
5.5f			VMONn_OV_THR = 0x5, VMONn_RANGE_SEL = 1	300	350	400	
5.5g			VMONn_OV_THR = 0x6, VMONn_RANGE_SEL = 1	350	400	450	
5.5h			VMONn_OV_THR = 0x7, VMONn_RANGE_SEL = 1	450	500	550	
5.6a	$V_{VMON_UV_TH2}$	Undervoltage monitoring for VMONx pin input with extended range[1]	VMONn_UV_THR = 0x0, VMONn_RANGE_SEL = 1	-200	-150	-100	mV
5.6b			VMONn_UV_THR = 0x1, VMONn_RANGE_SEL = 1	-225	-175	-125	
5.6c			VMONn_UV_THR = 0x2, VMONn_RANGE_SEL = 1	-250	-200	-150	
5.6d			VMONn_UV_THR = 0x3, VMONn_RANGE_SEL = 1	-300	-250	-200	
5.6e			VMONn_UV_THR = 0x4, VMONn_RANGE_SEL = 1	-350	-300	-250	
5.6f			VMONn_UV_THR = 0x5, VMONn_RANGE_SEL = 1	-400	-350	-300	
5.6g			VMONn_UV_THR = 0x6, VMONn_RANGE_SEL = 1	-450	-400	-350	
5.6h			VMONn_UV_THR = 0x7, VMONn_RANGE_SEL = 1	-550	-500	-450	
5.6i	$V_{TH_RV(VMON)}$	Threshold voltage for Residual Voltage Detection at VMONx pins		140	150	160	mV
Electrical Characteristics: VCCA INPUT							
5.7a	$VCCA_{OV_TH}$	Overvoltage monitoring for VCCA input, programable threshold accuracy[2]	VCCA_OV_THR = 0x0	2%	3%	4%	
5.7b			VCCA_OV_THR = 0x1	2.5%	3.5%	4.5%	
5.7c			VCCA_OV_THR = 0x2	3%	4%	5%	
5.7d			VCCA_OV_THR = 0x3	4%	5%	6%	
5.7e			VCCA_OV_THR = 0x4	5%	6%	7%	
5.7f			VCCA_OV_THR = 0x5	6%	7%	8%	
5.7g			VCCA_OV_THR = 0x6	7%	8%	9%	
5.7h			VCCA_OV_THR = 0x7	9%	10%	11%	

Copyright © 2022 Texas Instruments Incorporated

6.8 Monitoring Functions (continued)

Over operating free-air temperature range (unless otherwise noted). Voltage level refers to the AGNDx ground of the device.

POS	PARAMETER		TEST CONDITIONS	MIN	TYP	MAX	UNIT
5.8a	$VCCA_{UV_TH}$	Undervoltage monitoring for VCCA input, programable threshold accuracy(2)	VCCA_UV_THR = 0x0	-4%	-3%	-2%	
5.8b			VCCA_UV_THR = 0x1	-4.5%	-3.5%	-2.5%	
5.8c			VCCA_UV_THR = 0x2	-5%	-4%	-3%	
5.8d			VCCA_UV_THR = 0x3	-6%	-5%	-4%	
5.8e			VCCA_UV_THR = 0x4	-7%	-6%	-5%	
5.8f			VCCA_UV_THR = 0x5	-8%	-7%	-6%	
5.8g			VCCA_UV_THR = 0x6	-9%	-8%	-7%	
5.8h			VCCA_UV_THR = 0x7	-11%	-10%	-9%	
Timing Requirements							
5.9a	$t_{delay_OV_UV}$	BUCK and VMON OV/UV detection delay	Detection delay with 5mV (V_{in} ≤ 1 V) or 0.5% (V_{in} > 1 V) over/underdrive			8	µs
5.9b	$t_{delay_VCCA_OV_UV}$	VCCA OV/UV detection delay	Detection delay with 30mV over/underdrive			8	µs
5.10a	$t_{deglitch0_OV_UV}$	VCCA, BUCK and VMON OV/UV signal deglitch time	VMON_DEGLITCH_SEL is 0.5 µs: Digital deglitch time for detected signal		0.5	1	µs
5.10b	$t_{deglitch1_OV_UV}$		VMON_DEGLITCH_SEL is 4 µs: Digital deglitch time for detected signal	3.4	3.8	4.2	
5.10c	$t_{deglitch2_OV_UV}$		VMON_DEGLITCH_SEL is 20 µs: Digital deglitch time for detected signal	18	20	22	
5.11a	$t_{latency0_OV_UV}$	BUCK and VMON OV/UV signal latency time	VMON_DEGLITCH_SEL is 0.5 µs: Total delay from 5mV (V_{in} ≤ 1 V) or 0.5% (V_{in} > 1 V) over/ underdrive to interrupt or PFSM trigger			9	µs
5.11b	$t_{latency1_OV_UV}$		VMON_DEGLITCH_SEL is 4 µs: Total delay from 5mV (V_{in} ≤ 1 V) or 0.5% (V_{in} > 1 V) over/ underdrive to interrupt or PFSM trigger			13	
5.11c	$t_{latency2_OV_UV}$		VMON_DEGLITCH_SEL is 20 µs: Total delay from 5mV (V_{in} ≤ 1 V) or 0.5% (V_{in} > 1 V) over/ underdrive to interrupt or PFSM trigger			30	
5.11d	$t_{latency0_VCCA_OV_UV}$	VCCA OV/UV signal latency time	VMON_DEGLITCH_SEL is 0.5 µs: Total delay from 30mV over/underdrive to interrupt or PFSM trigger			9	µs
5.11e	$t_{latency1_VCCA_OV_UV}$		VMON_DEGLITCH_SEL is 4 µs: Total delay from 30mV over/underdrive to interrupt or PFSM trigger			13	
5.11f	$t_{latency2_VCCA_OV_UV}$		VMON_DEGLITCH_SEL is 20 µs: Total delay from 30mV over/underdrive to interrupt or PFSM trigger			30	
5.12a	$t_{deglitch_PGOOD_rise}$	PGOOD signal additional deglitch time	Input signal transition from invalid to valid	9.5		10.5	µs
5.12b	$t_{deglitch_PGOOD_fall}$		Input signal transition from valid to invalid		0		

(1) The default values of BUCKn_OV_THR, BUCKn_UV_THR, VMONn_OV_THR and VMONn_UV_THR registers come from the NVM memory, and can be re-programmed by software.
(2) The default values of VCCA_OV_THR and VCCA_UV_THR registers come from the NVM memory, and can be re-programmed by software.

6.9 Clocks, Oscillators, and DPLL

Over operating free-air temperature range (unless otherwise noted).

POS	PARAMETER		TEST CONDITIONS	MIN	TYP	MAX	UNIT
Switching Characteristics: 20-MHz and 128-kHz RC OSCILLATOR CLOCK							
6.2		20 MHz RC Oscillator output frequency		19	20	21	MHz
6.4		128 kHz RC Oscillator output frequency		121	128	135	kHz

6.9 Clocks, Oscillators, and DPLL (continued)

Over operating free-air temperature range (unless otherwise noted).

POS	PARAMETER		TEST CONDITIONS	MIN	TYP	MAX	UNIT
Switching Characteristics: DPLL, SYNCCLKIN, and SYNCCLKOUT							
6.6a		External input clock nominal frequency	EXT_CLK_FREQ = 0x0		1.1		MHz
6.6b			EXT_CLK_FREQ = 0x1		2.2		
6.6c			EXT_CLK_FREQ = 0x2		4.4		
6.6d			EXT_CLK_FREQ = 0x3		8.8		
6.7a		External input clock required accuracy from nominal frequency(1)	SS_DEPTH = 0x0 (Spread-spectrum disabled)	–18%		18%	
6.7b			SS_DEPTH = 0x1	–10%		10%	
6.7c			SS_DEPTH = 0x2	–8%		8%	
6.8a		Logic low time for SYNCCLKIN clock		40			ns
6.8b		Logic high time for SYNCCLKIN clock		40			ns
6.9a		External clock detection delay for missing clock detection				1.8	µs
6.10		Clock change delay (internal to external)	Delay from valid clock detection to use of external clock		600		µs
6.11a		SYNCCLKOUT clock nominal frequency	SYNCCLKOUT_FREQ_SEL = 0x1		1.1		MHz
6.11b			SYNCCLKOUT_FREQ_SEL = 0x2		2.2		
6.11c			SYNCCLKOUT_FREQ_SEL = 0x3		4.4		
6.12		SYNCCLKOUT duty-cycle	Cycle-to-cycle	40%	50%	60%	
6.13		SYNCCLKOUT output buffer external load	T_J = 25°C	5	35	50	pF
6.15a		Spread spectrum variation from nominal frequency	SS_DEPTH = 0x1		±6.3%		
6.15b			SS_DEPTH = 0x2		±8.4%		
6.17a	$t_{latency_CLKfail}$	Clock Monitor Failure signal latency from detection	Failure on 20 MHz system clock			10	µs
6.17b			Failure on 128 kHz monitoring clock			40	µs
6.18	$t_{latency_CLKdrift}$	Clock Monitor Drift signal latency from detection				115	µs
6.19	f_{sysclk}	Internal system clock		19	20	21	MHz
6.20	CLKdrift_TH	Threshold for internal system clock frequency drift detection		-20%		20%	
6.21	CLKfail_TH	Threshold for internal system clock stuck at high or stuck at low detection				10	MHz

(1) With 8.8 MHz frequency setting the maximum switching clock frequency may be limited by minimum high-side FET T_{on} time

6.10 Thermal Monitoring and Shutdown

Over operating free-air temperature range (unless otherwise noted).

POS	PARAMETER		TEST CONDITIONS	MIN	TYP	MAX	UNIT
Electrical Characteristics							
7.1a	T_{WARN_0}	Thermal warning threshold (no hysteresis)	TWARN_LEVEL = 0	120	130	140	°C
7.1b	T_{WARN_1}		TWARN_LEVEL = 1	130	140	150	
7.2a	$T_{SD_orderly_0}$	Thermal orderly shutdown rising threshold	TSD_ORD_LEVEL = 0	130	140	150	°C
7.2b	$T_{SD_orderly_1}$		TSD_ORD_LEVEL = 1	135	145	155	
7.2c		Thermal orderly shutdown hysteresis	TSD_ORD_LEVEL = 0		10		°C
7.2d			TSD_ORD_LEVEL = 1		5		
7.3a	T_{SD_imm}	Thermal immediate shutdown rising threshold		140	150	160	°C
7.3b		Thermal immediate shutdown hysteresis			5		°C
Timing Requirements							

Copyright © 2022 Texas Instruments Incorporated

Over operating free-air temperature range (unless otherwise noted).

POS	PARAMETER		TEST CONDITIONS	MIN	TYP	MAX	UNIT
7.4	$t_{latency_TSD}$	TSD signal latency from detection				425	µs

6.11 System Control Thresholds

Over operating free-air temperature range (unless otherwise noted). Voltage level refers to the AGNDx ground of the device.

POS	PARAMETER		TEST CONDITIONS	MIN	TYP	MAX	UNIT
Electrical Characteristics							
8.1a	$V_{POR_Falling}$	VCCA UVLO/POR falling threshold	Measured on VCCA pin, trimmed	2.7	2.75	2.8	V
8.1b	V_{POR_Rising}	VCCA UVLO/POR rising threshold	Measured on VCCA pin, untrimmed	2.7		3	V
8.1c	V_{POR_Hyst}	VCCA UVLO/POR hysteresis			100		mV
8.2a	V_{OVP_Rising}	VCCA OVP rising threshold	Measured on VCCA pin, trimmed	5.6	5.7	5.8	V
8.2b	V_{OVP_Hyst}	VCCA OVP hysteresis			50		mV
Timing Requirements							
8.3	$t_{latency_VCCAOVP}$	VCCA_OVP signal latency from detection				15	µs
8.6	$t_{latency_VCCAUVLO}$	VCCA_UVLO signal latency from detection				10	µs
8.8	$t_{latency_VINT}$	LDOVINT OVP and UVLO signal latency from detection	With 25-mV over/underdrive			12	µs
8.12a	$t_{INIT_REF_CLK_LDO}$	Device initialization time to start up references, LDOVINT and EEPROM LDO	From NO SUPPLY state			2.2	ms
8.12b	t_{INIT_LDO}	Device initialization time to start up references and EEPROM LDO	From LP_STANDBY state			0.95	ms
8.13	$t_{INIT_NVM_ANALOG}$	Device initialization time to load default values for NVM programmable registers and use trimmed values				0.6	ms
8.11	$t_{LBISTrun}$	Run time for LBIST	FAST_BIST=0			1.4	ms
8.10	$t_{ABISTrun}$	Run time for ABIST	Stand-alone device(1)			0.25	ms

(1) SPMI BIST is part of ABIST and can increase the time for devices in multi-PMIC platforms.

6.12 Current Consumption

Over operating free-air temperature range (unless otherwise noted).

POS	PARAMETER		TEST CONDITIONS	MIN	TYP	MAX	UNIT
Electrical Characteristics							
9.1a	$I_{LP_STANDBY_3V3}$	Low Power Standby current consumption(1)	From VCCA and PVIN_Bx pins. VCCA = PVIN_Bx = 3.3 V. VIO = 0V. T_J = 25℃		3000		µA
9.1b	$I_{LP_STANDBY_5V0}$		From VCCA and PVIN_Bx pins. VCCA = PVIN_Bx = 5.0 V. VIO = 0V. T_J = 25℃		3000		
9.2a	$I_{STANDBY_3V3}$	Standby current consumption	From VCCA and PVIN_Bx pins. VCCA OV/UV monitoring disabled. VCCA = PVIN_Bx = 3.3 V. VIO = 0V. T_J = 25℃		34		µA
9.2b	$I_{STANDBY_5V0}$		From VCCA and PVIN_Bx pins. VCCA OV/UV monitoring disabled. VCCA = PVIN_Bx = 5.0 V. VIO = 0V. T_J = 25℃		36		

Over operating free-air temperature range (unless otherwise noted).

POS	PARAMETER		TEST CONDITIONS	MIN	TYP	MAX	UNIT
9.4e	$I_{ACTIVE_3V3_8M8}$	Active current consumption during PWM operation	From VCCA and PVIN_Bx pins. VCCA = PVIN_Bx = VIO = 3.3 V. Fsw = 8.8 MHz. All buck regulators are enabled in forced PWM mode with no load. All buck and VCCA OV/UV monitoring enabled. T_J = 25℃		119		mA
9,4f	$I_{ACTIVE_5V0_8M8}$		From VCCA and PVIN_Bx pins. VCCA = PVIN_Bx = 5.0 V. VIO = 3.3V. Fsw = 8.8 MHz. All buck regulators are enabled in forced PWM mode with no load. All buck and VCCA OV/UV monitoring enabled. T_J = 25℃		175		

(1) LP_STANDBY mode is not preferred to use because of high current consumption.

6.13 Digital Input Signal Parameters

Over operating free-air temperature range, VIO refers to the VIO pin, VCCA refers to the VCCA pin (unless otherwise noted).

POS	PARAMETER		TEST CONDITIONS	MIN	TYP	MAX	UNIT
Electrical Characteristics: All Digital Input Signals in GPIOx, SCL_I2C1, SDA_I2C1, SCK_SPI, SDI_SPI							
10.1	V_{IL}	Low-level input voltage				0.54	V
10.2	V_{IH}	High-level input voltage		1.26			V
10.3		Hysteresis		150			mV
Timing Requirements: ENABLE							
10.4	t_{degl_ENABLE}	ENABLE signal deglitch time	GPIOx_DEGLITCH_EN = 1	6	8	10	µs
10.5	$t_{degl_nSLEEPx}$	nSLEEPx signal deglitch time		6	8	10	µs
Timing Requirements: GPIOx							
10.6	t_{degl_ESMx}	nERR signal deglitch time		13	15	17	µs
10.7	t_{WD_pulse}	TRIG_WDOG input signal deglitch time		24	30	36	µs
10.8	t_{degl_GPIx}	GPIx, WKUPx signal deglitch time	GPIOx_DEGLITCH_EN = 1	6	8	10	µs
10.9	$t_{no_degl_PW}$	Minimum pulse width for GPIx, WKUPx	GPIOx_DEGLITCH_EN = 0	200			ns

6.14 Digital Output Signal Parameters

Over operating free-air temperature range, VIO refers to the VIO pin, VLDO refers to the LDO_VOUT pin, VCCA refers to the VCCA pin (unless otherwise noted).

POS	PARAMETER		TEST CONDITIONS	MIN	TYP	MAX	UNIT
Electrical Characteristics: nINT, SDA_I2Cx							
11.1	V_{OL_20mA}	Low-level output voltage	I_{OL} = 20 mA	0		0.4	V
Electrical Characteristics: PGOOD(GPIO1), nRSTOUT_SOC(GPIO1), SDO_SPI, nRSTOUT_SOC(GPIO5), SYNCCLKOUT(GPIO5), nRSTOUT(GPIO10) and GPIO Output Signals through GPIO1, GPIO3, GPIO5 and GPIO10 pins							
11.2	V_{OL_20mA}	Low-level output voltage, push-pull and open-drain	I_{OL} = 20 mA	0		0.4	V
11.3	$V_{OH(VIO)}$	High-level output voltage, push-pull	I_{OH} = 3 mA	VIO – 0.4		VIO	V
Electrical Characteristics: PGOOD(GPIO6), SYNCCLKOUT(GPIO6) and GPIO Output Signals through GPIO2, GPIO6 pins							
11.4	V_{OL_3mA}	Low-level output voltage, push-pull and open-drain	I_{OL} = 3 mA	0		0.4	V
11.5	$V_{OH(VIO)}$	High-level output voltage, push-pull	I_{OH} = 3 mA	VIO – 0.4		VIO	V
Electrical Characteristics: SCLK_SPMI(GPIO8), SDATA_SPMI(GPIO9), PGOOD(GPIO9) and GPIO Output Signals through GPIO8 and GPIO9 pins							
11.6	V_{OL_20mA}	Low-level output voltage, push-pull and open-drain	I_{OL} = 20 mA	0		0.4	V
11.7	$V_{OH(VINT)}$	High-level output voltage, push-pull	I_{OH} = 3 mA	1.4		VLDO	V
Electrical Characteristics: GPIO Output Signals through GPIO4 and GPIO7 pins							
11.8	V_{OL_3mA}	Low-level output voltage, push-pull	I_{OL} = 3 mA	0		0.4	V

Copyright © 2022 Texas Instruments Incorporated

6.14 Digital Output Signal Parameters (continued)

Over operating free-air temperature range, VIO refers to the VIO pin, VLDO refers to the LDO_VOUT pin, VCCA refers to the VCCA pin (unless otherwise noted).

POS	PARAMETER		TEST CONDITIONS	MIN	TYP	MAX	UNIT
11.9	$V_{OH(VINT)}$	High-level output voltage, push-pull	I_{OH} = 3 mA	1.4		VLDO	V
11.9b	$V_{OH(VCCA)}$	High-level output voltage, push-pull	EN_DRV pin, 10 kΩ internal pull-up, V_{VIO} = V_{VCCA}, no load	VCCA - 0.4		VCCA	V
Timing Requirements							
11.10	$t_{gate_readback}$	Gating time for readback monitor	Signal level change or GPIO selection (GPIOn_SEL)	8.3		10.3	µs

6.15 I/O Pullup and Pulldown Resistance

Over operating free-air temperature range, VIO refers to the VIO_IN pin, VCCA refers to the VCCA pin (unless otherwise noted).

POS	PARAMETER		TEST CONDITIONS	MIN	TYP	MAX	UNIT
Electrical Characteristics							
12.2	R_{PU_GPIO}	IO signals pullup resistance	GPIO4, GPIO7, GPIO8 and GPIO9 pins with internal pullup to VOUT_LDO	280	400	520	kΩ
12.3	R_{PU_GPIO}	IO signals pullup resistance	GPIO1, GPIO2, GPIO3, GPIO5, GPIO6 and GPIO10 pins with internal pullup to VIO	280	400	520	kΩ
12.4	R_{PD_GPIO}	IO signals pulldown resistance	GPIO1 - 10 pins with internal pulldown to ground	280	400	520	kΩ
12.5	$R_{PU_NRSTOUT}$	nRSTOUT pullup resistance	Internal pullup to VIO supply when output driven high in push-pull configuration	8	10	12	kΩ
12.6	$R_{PU_NRSTOUT_SOC}$	nRSTOUT_SOC pullup resistance	Internal pullup to VIO supply when output driven high in push-pull configuration	8	10	12	kΩ
12.7	$R_{PU_EN_DRV}$	EN_DRV pullup resistance	Internal pullup to VCCA supply when output driven high	8	10	12	kΩ

6.16 I²C Interface

Over operating free-air temperature range (unless otherwise noted). Device supports standard mode (100 kHz), fast mode (400 kHz), and fast mode+ (1 MHz) when VIO is 3.3 V or 1.8 V, and high-speed mode (3.4 MHz) only when VIO is 1.8 V.

POS	PARAMETER		TEST CONDITIONS	MIN	TYP	MAX	UNIT
Electrical Characteristics							
13.1	C_B	Capacitive load for SDA and SCL				400	pF
Timing Requirements							
13.2a	f_{SCL}	Serial clock frequency	Standard mode			100	kHz
13.2b			Fast mode			400	
13.2c			Fast mode+			1	MHz
13.2d			High-speed mode, C_b = 100 pF			3.4	
13.2e			High-speed mode, C_b = 400 pF			1.7	
13.3a	t_{LOW}	SCL low time	Standard mode	4.7			µs
13.3b			Fast mode	1.3			
13.3c			Fast mode+	0.5			
13.3d			High-speed mode, C_b = 100 pF	160			ns
13.3e			High-speed mode, C_b = 400 pF	320			
13.4a	t_{HIGH}	SCL high time	Standard mode	4			µs
13.4b			Fast mode	0.6			
13.4c			Fast mode+	0.26			
13.4d			High-speed mode, C_b = 100 pF	60			ns
13.4e			High-speed mode, C_b = 400 pF	120			

6.16 I²C Interface (continued)

Over operating free-air temperature range (unless otherwise noted). Device supports standard mode (100 kHz), fast mode (400 kHz), and fast mode+ (1 MHz) when VIO is 3.3 V or 1.8 V, and high-speed mode (3.4 MHz) only when VIO is 1.8 V.

POS	PARAMETER		TEST CONDITIONS	MIN	TYP	MAX	UNIT
13.5a	$t_{SU;DAT}$	Data setup time	Standard mode	250			ns
13.5b			Fast mode	100			
13.5c			Fast mode+	50			
13.5d			High-speed mode	10			
13.6a	$t_{HD;DAT}$	Data hold time	Standard mode	10		3450	ns
13.6b			Fast mode	10		900	
13.6c			Fast mode+	10			
13.6d			High-speed mode, C_b = 100 pF	10		70	ns
13.6e			High-speed mode, C_b = 400 pF	10		150	
13.7a	$t_{SU;STA}$	Setup time for a start or a REPEATED START condition	Standard mode	4.7			µs
13.7b			Fast mode	0.6			
13.7c			Fast mode+	0.26			
13.7d			High-speed mode	160			ns
13.8a	$t_{HD;STA}$	Hold time for a start or a REPEATED START condition	Standard mode	4			µs
13.8b			Fast mode	0.6			
13.8c			Fast mode+	0.26			
13.8d			High-speed mode	160			ns
13.9a	t_{BUF}	Bus free time between a STOP and START condition	Standard mode	4.7			µs
13.9b			Fast mode	1.3			
13.9c			Fast mode+	0.5			
13.10a	$t_{SU;STO}$	Setup time for a STOP condition	Standard mode	4			µs
13.10b			Fast mode	0.6			
13.10c			Fast mode+	0.26			
13.10d			High-speed mode	160			ns
13.11a	t_{rDA}	Rise time of SDA signal	Standard mode			1000	ns
13.11b			Fast mode	20		300	
13.11c			Fast mode+			120	
13.11d			High-speed mode, C_b = 100 pF	10		80	
13.11e			High-speed mode, C_b = 400 pF	20		160	
13.12a	t_{fDA}	Fall time of SDA signal	Standard mode			300	ns
13.12b			Fast mode	6.5		300	
13.12c			Fast mode+	6.5		120	
13.12d			High-speed mode, C_b = 100 pF	10		80	
13.12e			High-speed mode, C_b = 400 pF	13		160	
13.13a	t_{rCL}	Rise time of SCL signal	Standard mode			1000	ns
13.13b			Fast mode	20		300	
13.13c			Fast mode+			120	
13.13d			High-speed mode, C_b = 100 pF	10		40	
13.13e			High-speed mode, C_b = 400 pF	20		80	
13.14a	t_{rCL1}	Rise time of SCL signal after a repeated start condition and after an acknowledge bit	High-speed mode, C_b = 100 pF	10		80	ns
13.14b			High-speed mode, C_b = 400 pF	20		160	
13.15a	t_{fCL}	Fall time of SCL signal	Standard mode			300	ns
13.15b			Fast mode	6.5		300	
13.15c			Fast mode+	6.5		120	
13.15d			High-speed mode, C_b = 100 pF	10		40	
13.15e			High-speed mode, C_b = 400 pF	20		80	

Copyright © 2022 Texas Instruments Incorporated

6.16 I²C Interface (continued)

Over operating free-air temperature range (unless otherwise noted). Device supports standard mode (100 kHz), fast mode (400 kHz), and fast mode+ (1 MHz) when VIO is 3.3 V or 1.8 V, and high-speed mode (3.4 MHz) only when VIO is 1.8 V.

POS	PARAMETER		TEST CONDITIONS	MIN	TYP	MAX	UNIT
13.16a	t_{SP}	Pulse width of spike suppressed (SCL and SDA spikes that are less than the indicated width are suppressed)	Standard mode, fast mode, and fast mode+			50	ns
13.16b			High-speed mode, C_b = 400 pf			10	

6.17 Serial Peripheral Interface (SPI)

These specifications are ensured by design, V_{VIO} = 1.8 V or 3.3 V(unless otherwise noted).

POS	PARAMETERS		TEST CONDITIONS	MIN	NOM	MAX	UNIT
Electrical Characteristics							
15.1		Capacitive load on pin SDO				30	pF
Timing Requirements							
15.2	1	Cycle time		200			ns
15.3	2	Enable lead time		150			ns
15.4	3	Enable lag time		150			ns
15.5	4	Clock low time		60			ns
15.6	5	Clock high time		60			ns
15.7	6	Data setup time		15			ns
15.8	7	Data hold time		15			ns
15.9	8	Output data valid after SCLK falling		4			ns
15.10a	9	New output data valid after SCLK falling	V_{VIO} = 1.8 V			72	ns
15.10b			V_{VIO} = 3.3 V			110	
15.11	10	Disable time				30	ns
15.12	11	CS inactive time		100			ns

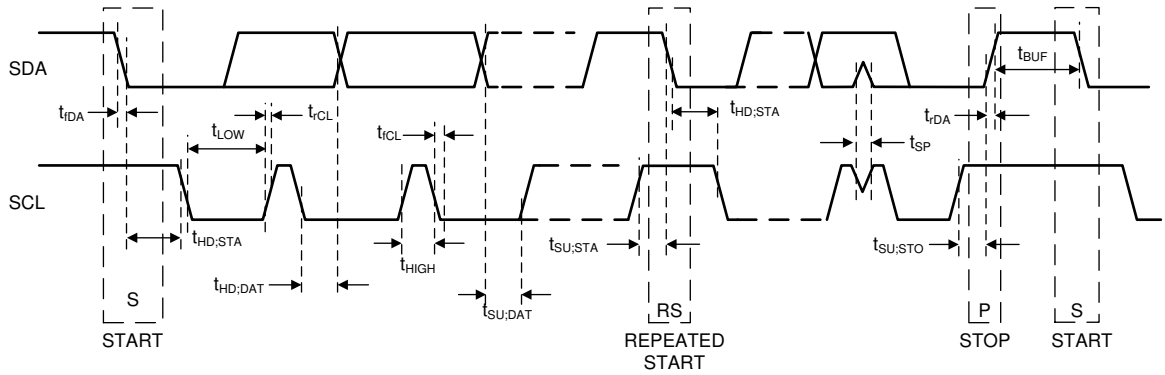

図 6-1. I²C Timing

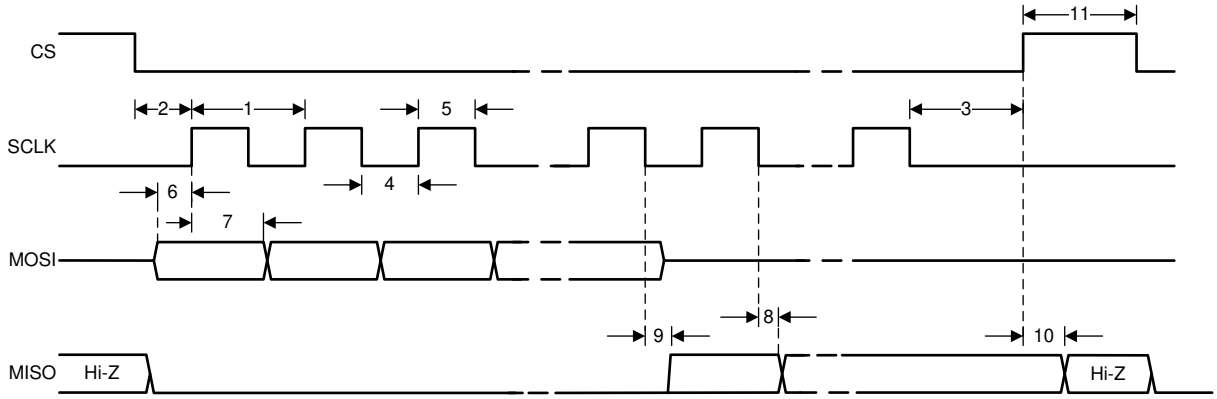

図 6-2. SPI Timing

Copyright © 2022 Texas Instruments Incorporated

6.18 Typical Characteristics

Unless otherwise specified: T_A = 25°C, V_{IN} = 3.3 V, V_{OUT} = 1 V.

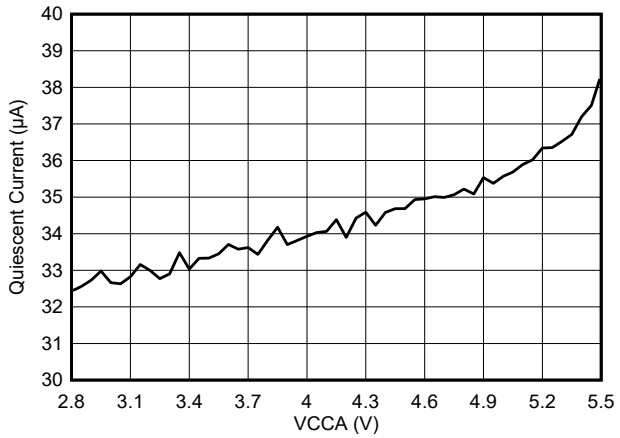

図 6-3. Quiescent Current Consumption vs Input Voltage

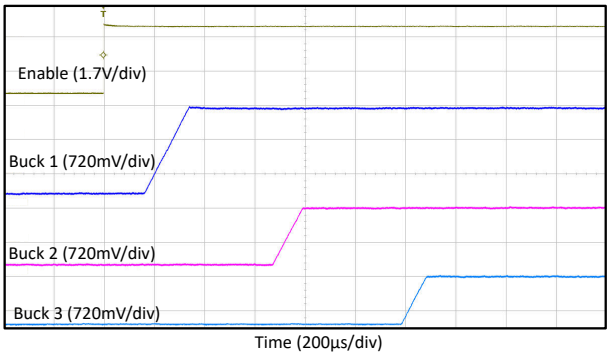

図 6-4. Startup, LP876242B0

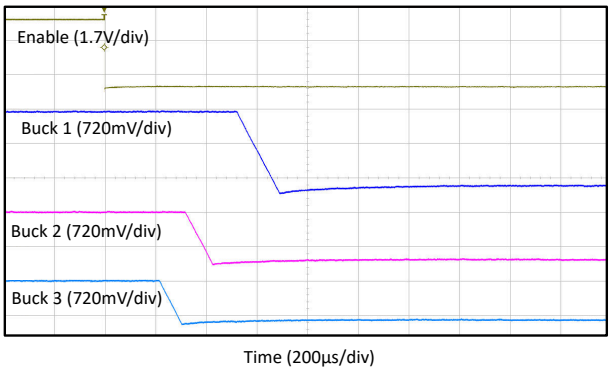

図 6-5. Shutdown, LP876242B0

7 Detailed Description

7.1 Overview

The LP876242-Q1 device is a power-management integrated circuit (PMIC), available in a 32-pin, 0.5-mm pitch, 5.5-mm × 5-mm QFN HotRod package. The device is designed for powering embedded systems or system on chip (SoC) in Automotive or Industrial applications. All buck converters have the capability to sink up to 1 A, and support dynamic voltage scaling. Double buffered voltage scaling registers enable each BUCK to transition to a different voltages during operation by SPI, I^2C or state transition. A DPLL enables the BUCK converters to synchronizing to an external clock input, with phase delays between the output rails.

Two I^2C interface channels or one SPI channel can be used to configure the power rails and the power state of the LP876242-Q1 device. I^2C channel 1 (I2C1) is the main channel with access to the registers that control the configurable power sequencer, the states and the outputs of power rails, and the device operating states. I^2C channel 2 (I2C2), which is available through GPIO2 and GPIO3 pins, is dedicated for accessing the Q&A Watchdog communication registers. When the SPI is configured instead of the two I^2C interfaces, the SPI can access all of the registers, including the Q&A Watchdog registers. An NVM option is available to enable I2C1 to access all of the registers as well, including the Q&A Watchdog registers.

The LP876242-Q1 device includes an internal RC oscillator to sequence all resources during power up and power down. An internal LDO (LDOVINT) generates the supply for the entire digital circuitry of the device as soon as the external input supply is available through the VCCA input.

LP876242-Q1 device has ten GPIOs each with multiple functions and configurable features. All of the GPIOs, when configured as a general purpose output pin, can be included in the power-up and power-down sequence and used as enable signals for external resources. In addition, each GPIO can be configured as a wake-up input or a sleep mode trigger. The default configuration of the GPIO port comes from the NVM memory, and can be re-configured by software if the external connection permits.

The LP876242-Q1 device includes a Q&A watchdog to monitor software lockup, and a system error monitoring input (nERR_MCU) with fault injection option to monitor the lock-step signal of the attached MCU. The device includes protection and diagnostic mechanisms such as short-circuit protection, thermal monitoring and shutdown. The PMIC can notify the processor of these events through the interrupt signal, allowing the processor to take action in response.

An SPMI interface is included in the LP876242-Q1 device to distribute power state information to at most five satellite PMICs, thus enabling synchronous power state transition across multiple PMICs in the application system. This feature allows the consolidation of IO control signals from up to six PMICs powering the system into one primary LP876242-Q1 PMIC.

Copyright © 2022 Texas Instruments Incorporated

7.2 Functional Block Diagram

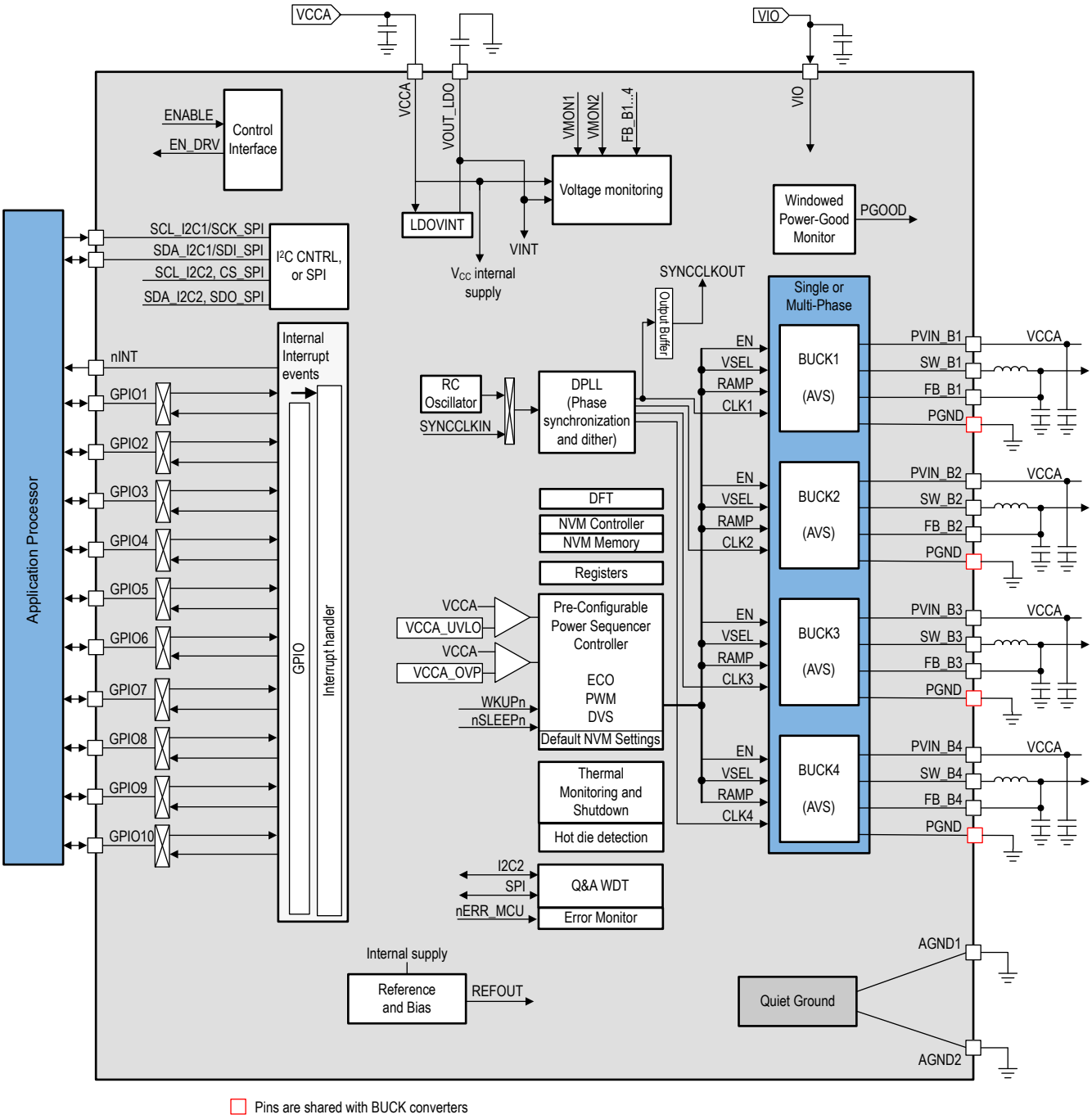

図 7-1. Functional Block Diagram

7.3 Feature Description

7.3.1 Input Voltage Monitor

The comparator module that monitors the voltage on the VCCA pins controls the power state machine of the LP876242-Q1 device. The 図 7-2 shows a block diagram of the VCCA input voltage monitoring. VCCA voltage detection outputs determine the power states of the device as following:

VCCA_UVLO When the voltage on the VCCA pin rises above VCCA_UVLO during initial power up, the LP876242-Q1 device transitions from the NO SUPPLY state to the INIT state.

When the supply at the VCCA pin falls below the VCCA_UVLO threshold, the device returns to the NO SUPPLY state and is completely shut down.

VCCA_OVP While the LP876242-Q1 device is in operation, if the voltage on VCCA pin rises above the VCCA_OVP threshold, the device clears the ENABLE_DRV bit and start the immediate shutdown sequence using pull-down resistors at the buck regulator outputs to protect itself from over-voltage input condition.

When VCCA is expected to be 5 V or 3.3 V, a separate voltage comparator can be enabled to monitor whether or not the VCCA voltage is within the expected range. Please refer to for additional detail on the operation of the VCCA OV/UV monitor function.

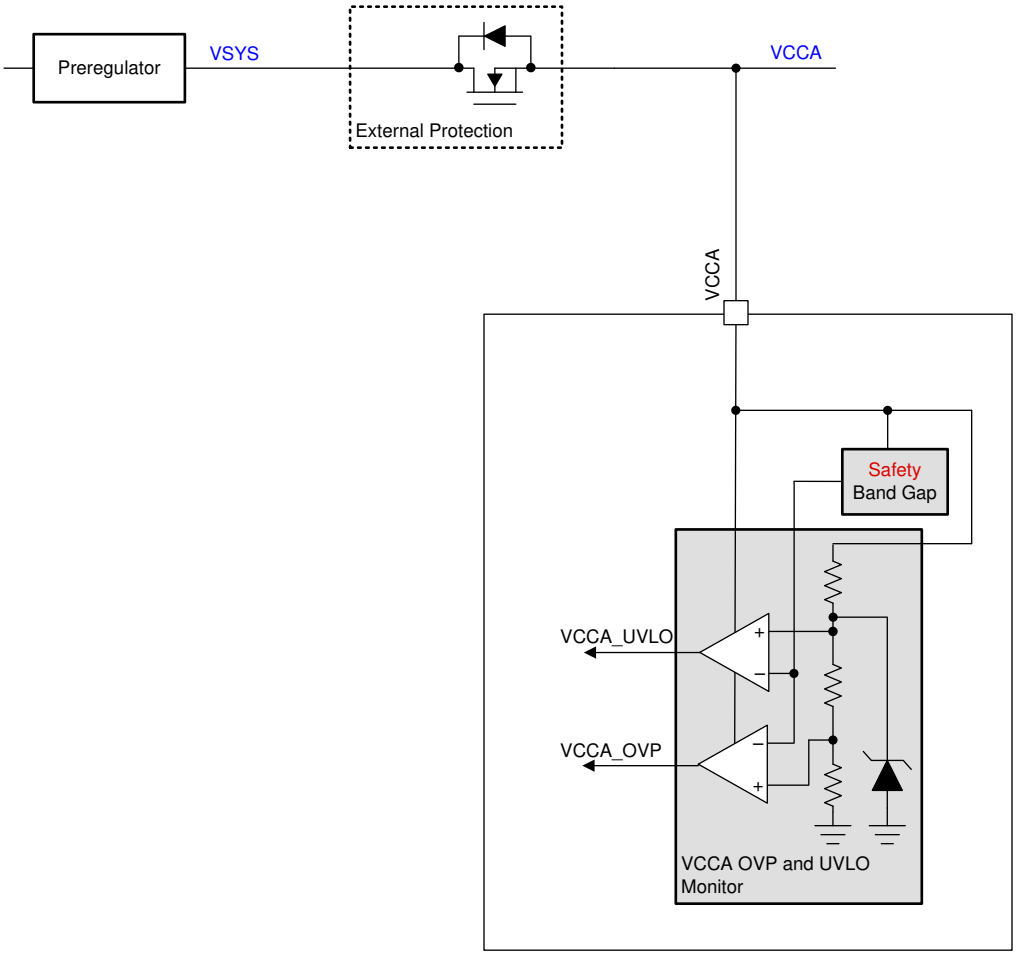

図 7-2. VCCA Monitor

7.3.2 Power Resources

The power resources provided by the LP876242-Q1 device include 4 inductor-based buck regulators. These supply resources provide the required power to the external processor cores, external components, and to

Copyright © 2022 Texas Instruments Incorporated

modules embedded in the LP876242-Q1 device. The supply of the bucks, the PVIN_Bx pins, must connect to the VCCA pin externally.

7.3.2.1 Buck Regulators

7.3.2.1.1 BUCK Regulator Overview

The LP876242-Q1 includes four synchronous buck converters. All of the buck converters support the following features:

- External clock synchronization option to minimize crosstalk
- Optional spread spectrum technique to reduce EMI
- Soft start
- AVS support with configurable slew-rate
- Windowed undervoltage and overvoltage monitors with configurable threshold
- Windowed voltage monitor for external supply when the buck converter is disabled
- Output Current Limit
- Short-to-Ground Detection on SW_Bx pins at start-up of the buck regulator

図 7-3 shows a block diagram of a single core.

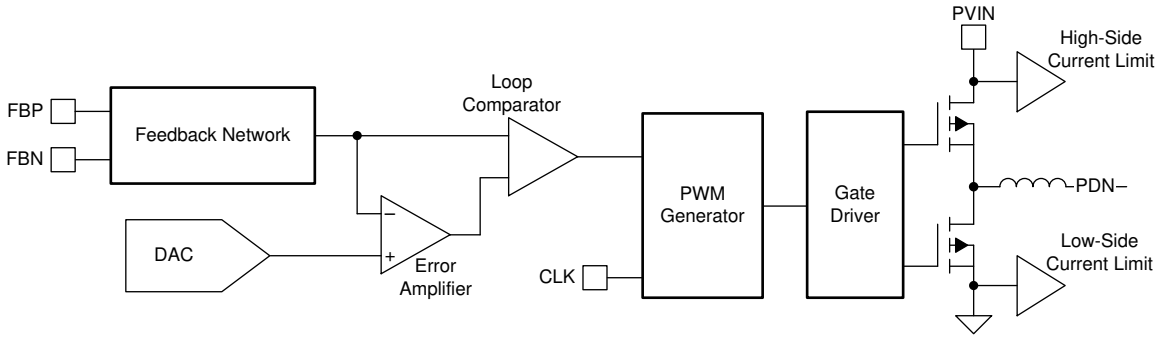

図 7-3. BUCK Core Block Diagram

7.3.2.1.2 Spread-Spectrum Mode

The LP876242-Q1 device supports spread-spectrum modulation of the switching clock signal used by the BUCK regulators. Three factory-selectable modulation modes are available: the first mode is modulation from external input clock at the SYNCCLKIN pin; the second mode is modulating the input clock at the SYNCCLKIN pin using the DPLL; the third mode is modulating the internal 20-MHz RC-Oscillator clock using the DPLL.

The spread-spectrum modulation mode is pre-configured in NVM. Changing this modulation mode during operation is not supported.

The modulation frequency range is limited by the DPLL bandwidth. The max frequency spread for the input clock to the DPLL is ±18% to secure parametric compliance of the BUCK output performance.

The internal modulation is disabled by default and can be enabled and configured after power up. Internal modulation is activated by setting the SS_EN control bit. The internal modulation must be disabled (SS_EN = 0) when changing the following parameter:

- SS_DEPTH[1:0] – Spread Spectrum modulation depth

When internal modulation is enabled and configured, it can be disabled by the system MCU during operation. The device transition to different mission states does not impact internal modulation when it is enabled and configured.

7.3.2.1.3 Adaptive Voltage Scaling (AVS) and Dynamic Voltage Scaling (DVS) Support

An AVS or a DVS voltage value can be configured by the attached MCU after the BUCK regulator is powered up to the default output voltage selected in register BUCKn_VSET1, that loads its default value from NVM. The purpose of the AVS/DVS voltage is to set the BUCK output voltage to enable optimal efficiency and performance of the attached SoC.

All of BUCK regulators in the LP876242-Q1 device support AVS and DVS voltage scaling changes. Once the AVS/DVS voltage value is written into the BUCKn_VSET1 or BUCKn_VSET2 register, and the MCU sets the BUCKn_VSEL register to select the AVS/DVS voltage, the output of the BUCK regulator remains at the AVS/DVS voltage level instead of the default voltage from NVM until one of the following events occur:

- Error that causes the device to re-initialize itself through a power cycle after reaching the SAFE RECOVERY state
- Error that causes the device to execute warm reset

図 7-4 shows the arbitration scheme for loading the output level of the BUCK regulator from the AVS register using the BUCKn_VSET control registers.

図 7-4. AVS/DVS Configuration Register Arbitration Diagram

The digital control block automatically updates the OV and UV threshold of the BUCK output voltage monitor during the AVS or DVS voltage change. When the output voltage is increased, the OV threshold is updated at the same time the BUCKn_VSETx is updated to the AVS voltage level, while the UV threshold is updated after a delay calculated by 式 1.

When the output voltage is decreased, the UV threshold is updated at the same time the BUCKn_VSETx is updated to the AVS voltage level, while the OV threshold is updated after a delay calculated by 式 1.

$$t_{PG_OV_UV_DELAY} = (dV / BUCKn_SLEW_RATE) + t_{settle_Bx} \quad (1)$$

In order to prevent erroneous voltage monitoring, the digital block also temporarily masks the results of the OV and UV monitor from the regulator output when the BUCK regulator is enabled and the voltage is rising to the BUCKn_VSETx level. The duration of the mask starts from the time the BUCK regulator is enabled. The BUCK OV monitor output is masked for a fixed delay time of $t_{PG_OV_GATE}$, that is approximately 115 µs – 128 µs. The UV monitor output is masked for the time duration calculated by 式 2. The 370-µs additional delay time in the formula includes the start-up delay of the BUCK regulator, the fixed delay after the ramp, and the time for the BIST operation of the OV and UV monitors.

$$t_{PG_UV_GATE} = (BUCKn_VSET / BUCKn_SLEW_RATE) + 370\ \mu s \quad (2)$$

注

Because output capacitance, forward and negative current limits and load current of the BUCK regulator may affect the slew rate of the BUCK regulator output voltage, the delay time of $t_{PG_UV_GATE}$ may not be sufficient long for the slower slew rate setting when the target BUCK regulator output voltage is higher. Please refer to the PMIC User's Guide for detail information about the supported voltage level and slew rate setting combinations of a particular orderable part number.

図 7-5 and 図 7-6 are timing diagrams illustrating the voltage change for AVS and DVS enabled BUCK regulators and the corresponding OV and UV monitor threshold changes.

Copyright © 2022 Texas Instruments Incorporated

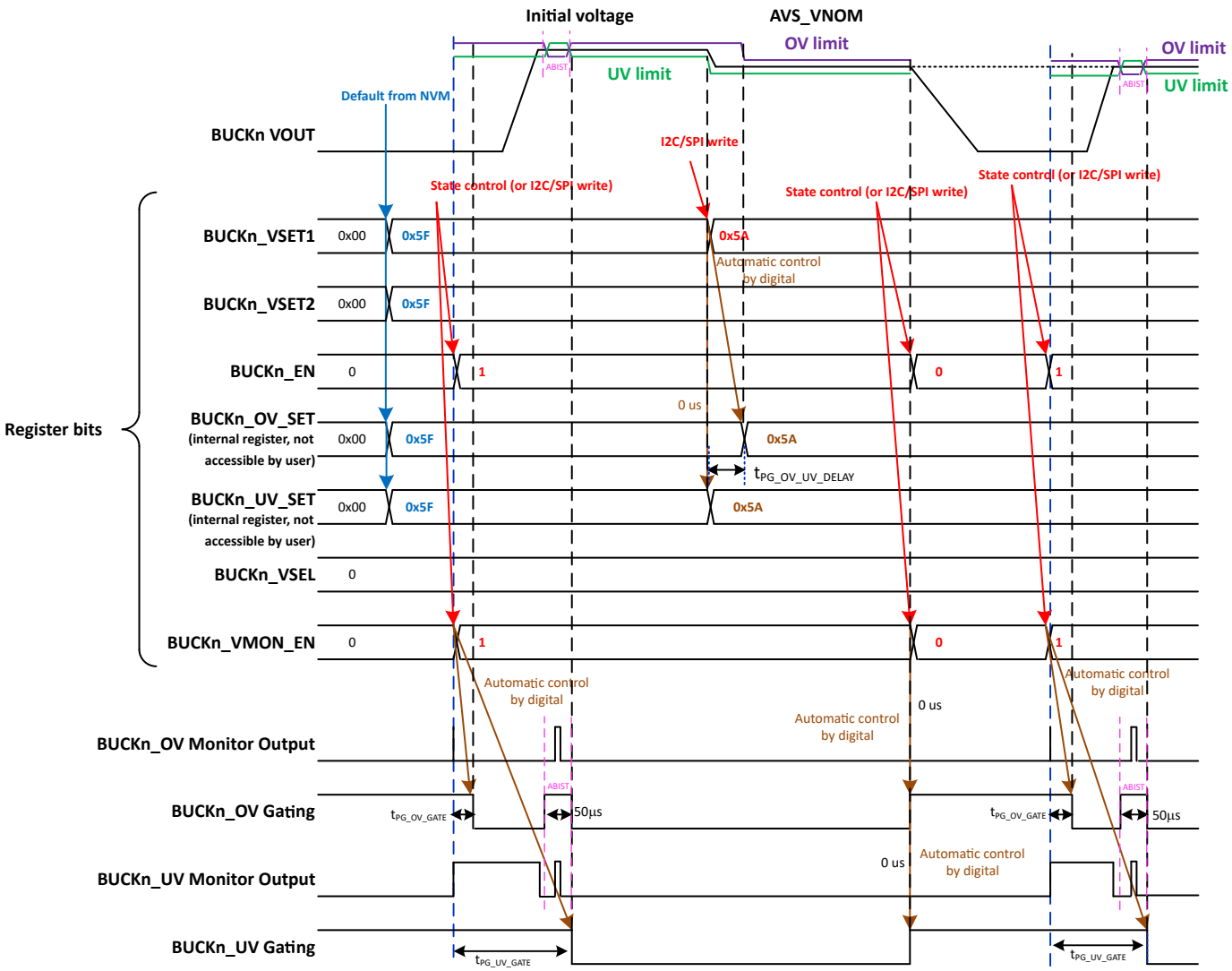

図 7-5. AVS Voltage and OV UV Threshold Level Change Timing Diagram

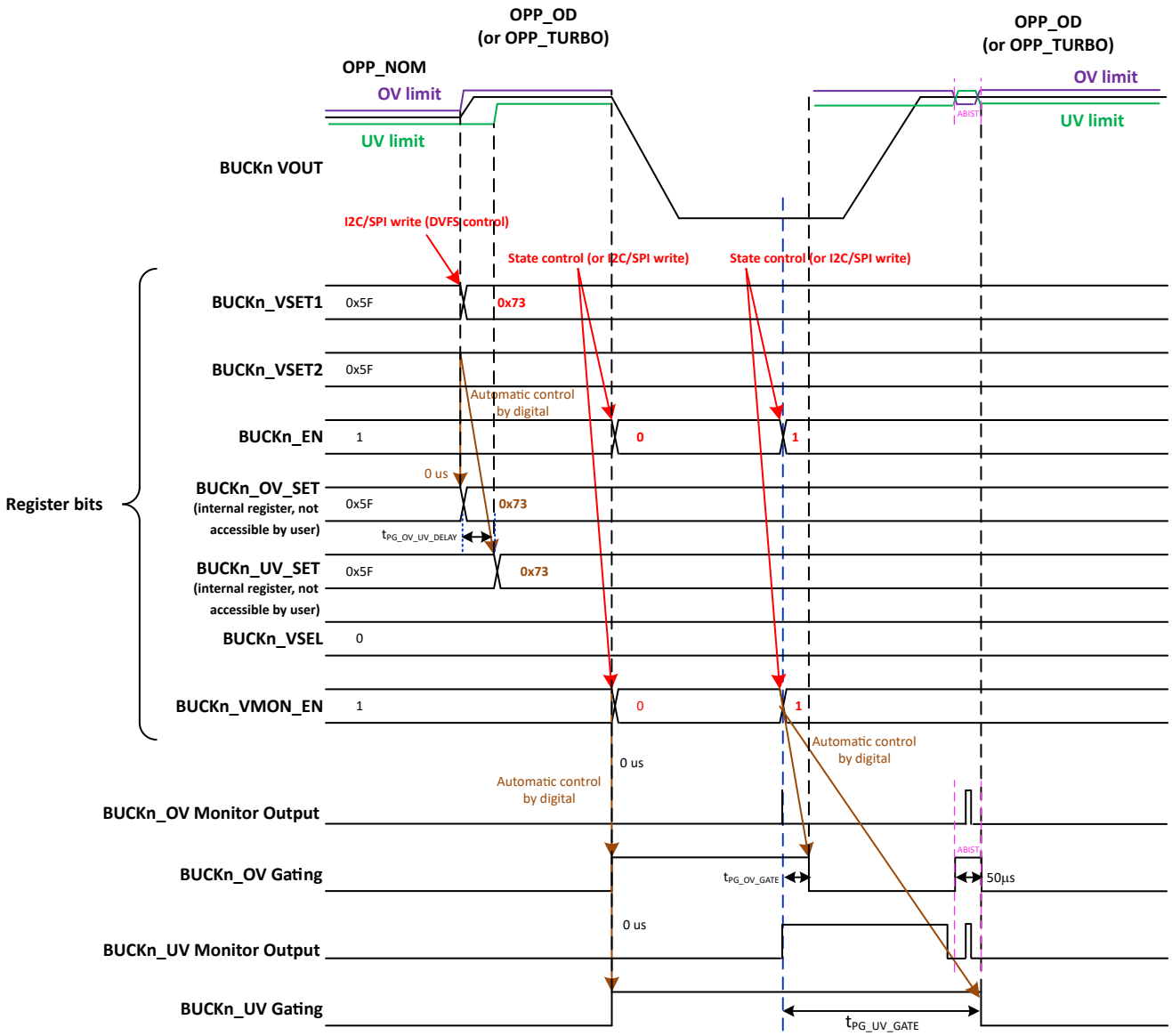

図 7-6. DVS Voltage and OV UV Threshold Level Change Timing Diagram

Copyright © 2022 Texas Instruments Incorporated

7.3.2.1.4 BUCK Output Voltage Setting

表 7-1 shows the coding used to select the BUCK regulator output voltage.

表 7-1. Output Voltage Selection for BUCK Regulators

BUCKn_VSE Tn	Output Voltage [V] 20 mV steps	BUCKn_VSE Tn	Output Voltage [V] 5 mV steps	BUCKn_VSE Tn	Output Voltage [V] 5 mV steps	BUCKn_VSE Tn	Output Voltage [V] 10 mV steps	BUCKn_VSE Tn	Output Voltage [V] 20 mV steps	BUCKn_VSE Tn	Output Voltage [V] 20 mV steps
0x00	0.3	0x0F	0.6	0x41	0.85	0x73	1.1	0xAB	1.66	0xD6	2.52
0x01	0.32	0x10	0.605	0x42	0.855	0x74	1.11	0xAC	1.68	0xD7	2.54
0x02	0.34	0x11	0.61	0x43	0.86	0x75	1.12	0xAD	1.7	0xD8	2.56
0x03	0.36	0x12	0.615	0x44	0.865	0x76	1.13	0xAE	1.72	0xD9	2.58
0x04	0.38	0x13	0.62	0x45	0.87	0x77	1.14	0xAF	1.74	0xDA	2.6
0x05	0.4	0x14	0.625	0x46	0.875	0x78	1.15	0xB0	1.76	0xDB	2.62
0x06	0.42	0x15	0.63	0x47	0.88	0x79	1.16	0xB1	1.78	0xDC	2.64
0x07	0.44	0x16	0.635	0x48	0.885	0x7A	1.17	0xB2	1.8	0xDD	2.66
0x08	0.46	0x17	0.64	0x49	0.89	0x7B	1.18	0xB3	1.82	0xDE	2.68
0x09	0.48	0x18	0.645	0x4A	0.895	0x7C	1.19	0xB4	1.84	0xDF	2.7
0x0A	0.5	0x19	0.65	0x4B	0.9	0x7D	1.2	0xB5	1.86	0xE0	2.72
0x0B	0.52	0x1A	0.655	0x4C	0.905	0x7E	1.21	0xB6	1.88	0xE1	2.74
0x0C	0.54	0x1B	0.66	0x4D	0.91	0x7F	1.22	0xB7	1.9	0xE2	2.76
0x0D	0.56	0x1C	0.665	0x4E	0.915	0x80	1.23	0xB8	1.92	0xE3	2.78
0x0E	0.58	0x1D	0.67	0x4F	0.92	0x81	1.24	0xB9	1.94	0xE4	2.8
		0x1E	0.675	0x50	0.925	0x82	1.25	0xBA	1.96	0xE5	2.82
		0x1F	0.68	0x51	0.93	0x83	1.26	0xBB	1.98	0xE6	2.84
		0x20	0.685	0x52	0.935	0x84	1.27	0xBC	2	0xE7	2.86
		0x21	0.69	0x53	0.94	0x85	1.28	0xBD	2.02	0xE8	2.88
		0x22	0.695	0x54	0.945	0x86	1.29	0xBE	2.04	0xE9	2.9
		0x23	0.7	0x55	0.95	0x87	1.3	0xBF	2.06	0xEA	2.92
		0x24	0.705	0x56	0.955	0x88	1.31	0xC0	2.08	0xEB	2.94
		0x25	0.71	0x57	0.96	0x89	1.32	0xC1	2.1	0xEC	2.96
		0x26	0.715	0x58	0.965	0x8A	1.33	0xC2	2.12	0xED	2.98
		0x27	0.72	0x59	0.97	0x8B	1.34	0xC3	2.14	0xEE	3.0
		0x28	0.725	0x5A	0.975	0x8C	1.35	0xC4	2.16	0xEF	3.02
		0x29	0.73	0x5B	0.98	0x8D	1.36	0xC5	2.18	0xF0	3.04
		0x2A	0.735	0x5C	0.985	0x8E	1.37	0xC6	2.2	0xF1	3.06

Copyright © 2022 Texas Instruments Incorporated

表 7-1. Output Voltage Selection for BUCK Regulators (continued)

BUCKn_VSE Tn	Output Voltage [V] 20 mV steps	BUCKn_VSE Tn	Output Voltage [V] 5 mV steps	BUCKn_VSE Tn	Output Voltage [V] 5 mV steps	BUCKn_VSE Tn	Output Voltage [V] 10 mV steps	BUCKn_VSE Tn	Output Voltage [V] 20 mV steps	BUCKn_VSE Tn	Output Voltage [V] 20 mV steps
		0x2B	0.74	0x5D	0.99	0x8F	1.38	0xC7	2.22	0xF2	3.08
		0x2C	0.745	0x5E	0.995	0x90	1.39	0xC8	2.24	0xF3	3.1
		0x2D	0.75	0x5F	1.0	0x91	1.4	0xC9	2.26	0xF4	3.12
		0x2E	0.755	0x60	1.005	0x92	1.41	0xCA	2.28	0xF5	3.14
		0x2F	0.76	0x61	1.01	0x93	1.42	0xCB	2.3	0xF6	3.16
		0x30	0.765	0x62	1.015	0x94	1.43	0xCC	2.32	0xF7	3.18
		0x31	0.77	0x63	1.02	0x95	1.44	0xCD	2.34	0xF8	3.2
		0x32	0.775	0x64	1.025	0x96	1.45	0xCE	2.36	0xF9	3.22
		0x33	0.78	0x65	1.03	0x97	1.46	0xCF	2.38	0xFA	3.24
		0x34	0.785	0x66	1.035	0x98	1.47	0xD0	2.4	0xFB	3.26
		0x35	0.79	0x67	1.04	0x99	1.48	0xD1	2.42	0xFC	3.28
		0x36	0.795	0x68	1.045	0x9A	1.49	0xD2	2.44	0xFD	3.3
		0x37	0.8	0x69	1.05	0x9B	1.5	0xD3	2.46	0xFE	3.32
		0x38	0.805	0x6A	1.055	0x9C	1.51	0xD4	2.48	0xFF	3.34
		0x39	0.81	0x6B	1.06	0x9D	1.52	0xD5	2.5		
		0x3A	0.815	0x6C	1.065	0x9E	1.53				
		0x3B	0.82	0x6D	1.07	0x9F	1.54				
		0x3C	0.825	0x6E	1.075	0xA0	1.55				
		0x3D	0.83	0x6F	1.08	0xA1	1.56				
		0x3E	0.835	0x70	1.085	0xA2	1.57				
		0x3F	0.84	0x71	1.09	0xA3	1.58				
		0x40	0.845	0x72	1.095	0xA4	1.59				
						0xA5	1.6				
						0xA6	1.61				
						0xA7	1.62				
						0xA8	1.63				
						0xA9	1.64				
						0xAA	1.65				

Copyright © 2022 Texas Instruments Incorporated

7.3.2.1.5 Sync Clock Functionality

The LP876242-Q1 device contains a SYNCCLKIN input to synchronize switching clock of the buck regulator with the external clock. The block diagram of the clocking and DPLL module is shown in 図 7-7. The external clock is selected when the external clock is available, and SEL_EXT_CLK = '1'. The nominal frequency of the external input clock is set by EXT_CLK_FREQ[1:0] bits in the NVM and it can be 1.1 MHz, 2.2 MHz, 4.4 MHz, or 8.8 MHz.

The EXT_CLK_INT interrupt is also generated in cases the external clock is expected, but it is not available.

The LP876242-Q1 device can also generate clock SYNCCLKOUT for external device use. The SYNCCLKOUT_FREQ_SEL[1:0] selects the frequency of the SYNCCLKOUT. Please note that SYNCCLKOUT_FREQ_SEL[1:0] must stay static while SYNCCLKOUT is used, as changing the output frequency selection may cause glitches on the clock output.

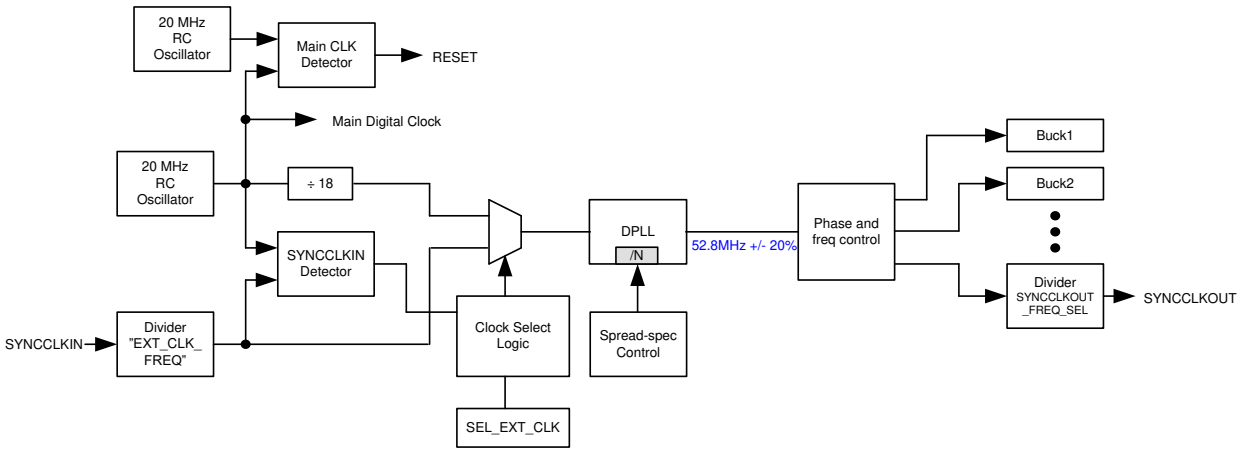

図 7-7. Sync Clock and DPLL Module

7.3.2.2 Internal Low Dropout Regulator (LDOVINT)

The LDOVINT voltage regulator is dedicated to supply the digital and analog functions of the LP876242-Q1 device. The LDOVINT regulator is controlled by VCCA supply, when VCCA is available the LDOVINT is enabled.

7.3.3 Residual Voltage Checking

The residual voltage (RV) checking feature ensures the voltage level at the buck regulators or VMONx inputs is below $V_{TH_SC_RV}$ before it can be ramped up the target output voltage. If BUCKn/VMONn_RV_SEL=1 by default, residual voltage is also checked before the device enters BOOT_BIST state. If the residual voltage is greater than $V_{TH_SC_RV}$, the device waits until voltage goes below $V_{TH_SC_RV}$ before starting BOOT_BIST.

This feature is enabled by the BUCKn_VMON_EN and BUCKn_RV_SEL bits for each buck regulators, and by the VMONn_EN and VMONn_RV_SEL bits for VMON inputs. When this feature is enabled, the voltage monitor of the corresponding regulator or monitoring input remains on after the monitoring is disabled, and remain on for the RV Timeout period. After the RV Timeout period elapses the monitored voltage is compared to the short circuit (SC) threshold of $V_{TH_SC_RV}$, and assert the corresponding BUCKn_SC_INT or VMONn_RV_INT interrupt bits if the residual voltage is still higher than the threshold voltage. The RV timeout period for the BUCK regulators and VMON inputs is automatically calculated by the digital controller inside the device by 式 3 and 式 4. If external voltage is monitored with buck feedback pin, buck is disabled all the time (BUCKn_EN = 0).

$$t_{BUCK_RV_TIMEOUT} = BUCKn_VSET / BUCKn_SLEW_RATE + 100\ \mu s \quad (3)$$

$$t_{VMON_RV_TIMEOUT} = VMONn_PG_VSET / VMONn_SLEW_RATE + 100\ \mu s \quad (4)$$

図 7-8 shows the timing diagram of the residual voltage checking operation that results in pass or fail results.

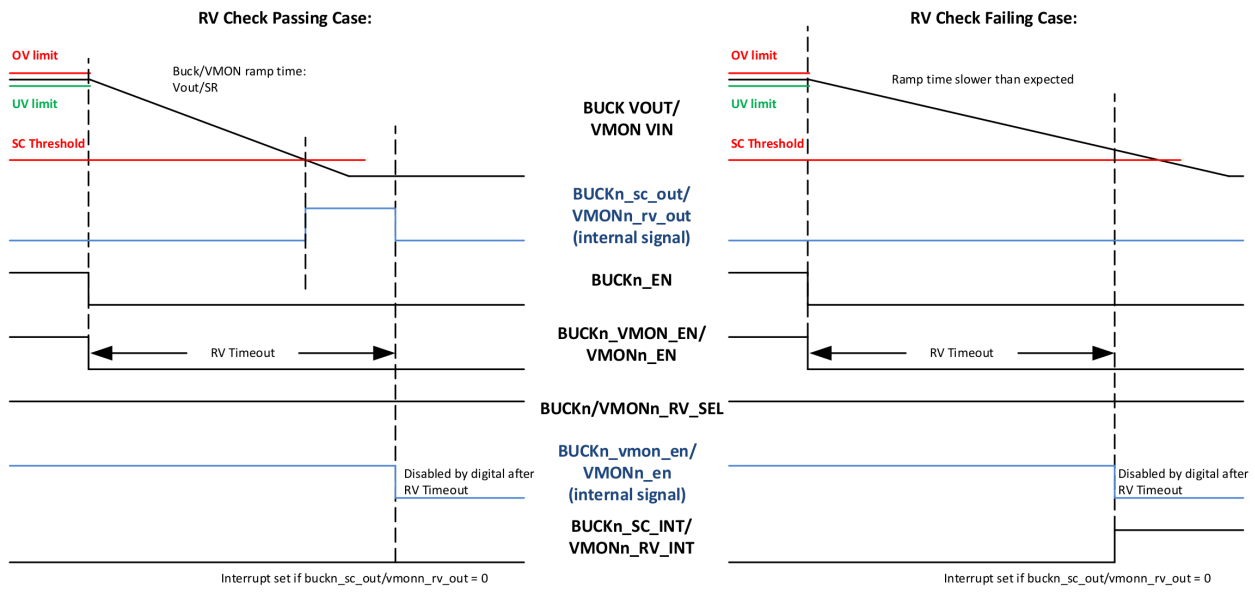

図 7-8. Residual Voltage Check Timing Diagram

注

Unless mentioned otherwise in the User's Guide for the orderable part number, the residual voltage monitoring is enabled .once, immediately after a power-up event on the VCCA input supply pin. Before the LP876242-Q1 executes the start-up sequence of the BUCK regulators, the LP876242-Q1 disables all residual voltage monitors. TI has made this implementation to prevent false-positive residual-voltage detection caused by charge accumulation in the output capacitors of the BUCK regulators or at the output voltage rails monitored through VMON_1 (at GPIO7 pin) or VMON_2 (at GPIO8 pin).

7.3.4 Output Voltage Monitor and PGOOD Generation

The LP876242-Q1 device monitors the undervoltage (UV) and overvoltage (OV) conditions on the output voltages of the BUCK regulators, the UV and OV conditions on the VMONn voltage monitoring input pins , and VCCA (when it is expected to be 5 V or 3.3 V), and has the option to indicate the result with a PGOOD signal. Thermal warning can also be included in the result of the PGOOD monitor if it is not masked. Either voltage and current monitoring or only voltage monitoring can be selected for PGOOD indication. This selection is set by the PGOOD_SEL_BUCKn register bits for each BUCK regulator (select primary phase for multi-phase regulator). When voltage and current are monitored, an active PGOOD signal active indicates that the regulator output is inside the Power-Good voltage window and that load current is below the current limit. If only voltage is monitored, then the current monitoring is ignored for the PGOOD signal.

The PGOOD signal represents the momentary status of the included indications without latching. If the PGOOD signal goes low due to an indicated warning or error condition, the PGOOD signal goes high immediately when the previous indicated warning or error condition is no longer present.

The BUCKn_VMON_EN bit enables the overvoltage (OV) , undervoltage (UV) and short-circuit (SC) comparators. The current limit (ILIM) comparator of each BUCK regulator is activated as soon as the corresponding BUCK regulator is enabled. In order to add the current limit indication of a BUCK regulator to the PGOOD signal, the BUCKn_VMON_EN bit of the corresponding BUCK regulator must be set. When a BUCK is not needed as a regulated output, it can be used as a voltage monitor for an external rail. For BUCK converters, if the BUCKn_VMON_EN bit remains '1' while the BUCKn_EN bit is '0', it can be used as a voltage monitor for an external rail that is connected to the FB_Bn pin of the BUCK regulator.

When the voltage monitor for a BUCK regulator is disabled, the output of the corresponding monitor is automatically masked to prevent it from forcing PGOOD inactive. The masking allows PGOOD to be connected to other open-drain power good signals in the system.

Copyright © 2022 Texas Instruments Incorporated

The VCCA input voltage monitoring is enabled with VCCA_VMON_EN bit. The monitoring can be enabled by an NVM default setting, that starts the monitoring of the VCCA voltage after the voltage monitor passes ABIST during the BOOT BIST state. The reference voltage for the VCCA monitor can be set by the VCCA_PG_SET bit to either 3.3 V or 5 V. The PGOOD_SEL_VCCA register bit selects whether or not the result of the VCCA monitor is included in the PGOOD monitor output signal.

An NVM option is available to gate the PGOOD output with the nRSTOUT and the nRSTOUT_SoC signals, the intended reset signals for the safety MCU and the SoC respectively. When PGOOD_SEL_NRSTOUT = '1', the PGOOD pin is gated by the nRSTOUT signal. When PGOOD_SEL_NRSTOUT_SOC = '1', the PGOOD pin is gated by the nRSTOUT_SoC signal. This option allows the PGOOD output to be used as an enable signal for external peripherals.

The outputs of the voltage monitors from all the output rails are combined, and PGOOD is active only if all the sources shows active status.

The type of output voltage monitoring for PGOOD signal is selected by PGOOD_WINDOW bit. If the bit is 0, only undervoltage is monitored; if the bit is 1, then undervoltage and overvoltage are monitored.

The polarity and the output type (push-pull or open-drain) are selected by PGOOD_POL and GPIO9_OD bits.

図 7-9 shows the Power-Good generation block diagram, and 図 7-10 shows the Power-Good waveforms.

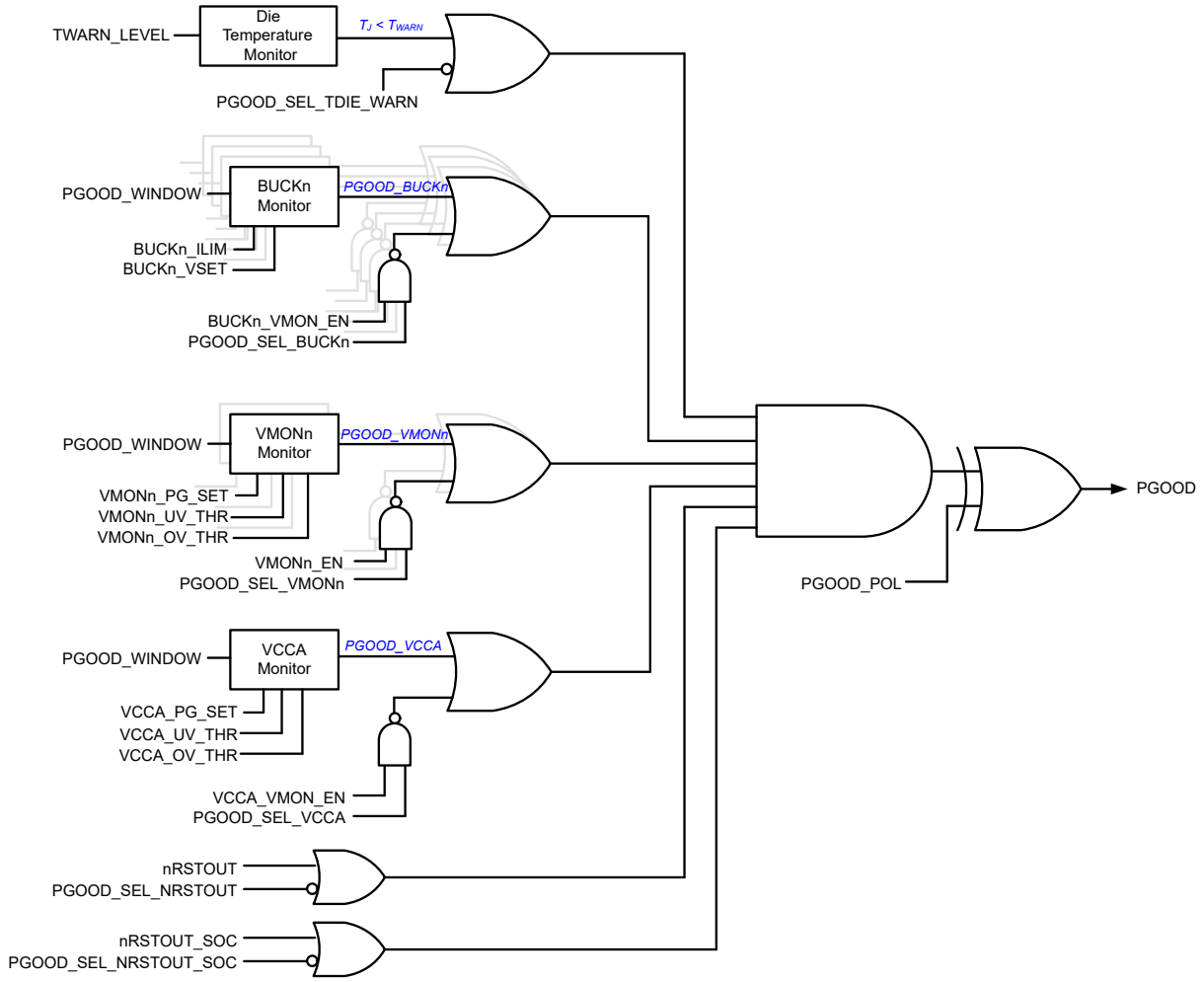

図 7-9. PGOOD Block Diagram

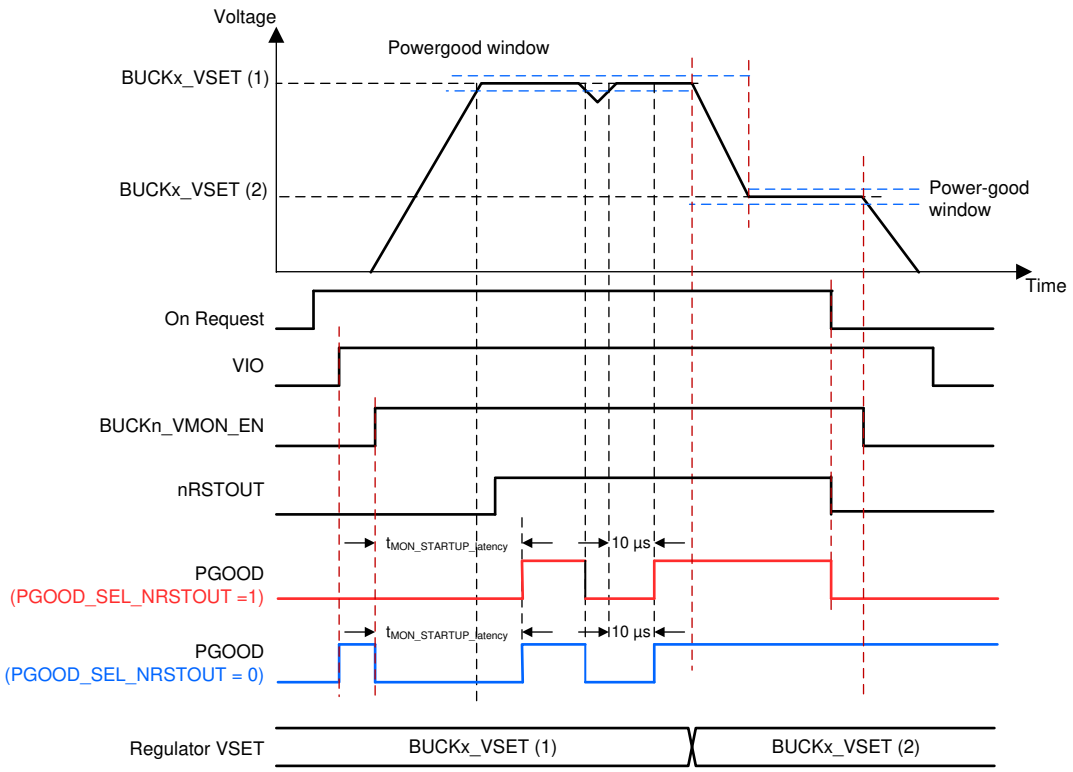

図 7-10. PGOOD Waveforms

The OV and UV threshold of the voltage monitors of the BUCK regulators and VMON input voltage monitor are updated automatically by the digital control block when the voltage setting changes. When the output voltage of the regulator is increased, the OV threshold is updated at the same time the _VSET of the regulator or the PG_LEVEL of the VMON is changed. The UV threshold is updated after a delay calculated by the delta voltage change and the slew rate setting. When the output voltage is decreased, the UV threshold is updated at the same time the _VSET of the regulator or PG_SET of the VMON is changed. The OV threshold is updated after a delay calculated by the delta voltage change and the slew rate setting. The OV and UV threshold of the BUCK output voltage monitors and VMON input voltage monitors are calculated based on the target output voltage set by the corresponding BUCKn_VSET1, BUCKn_VSET2 , or VMONn_PG_SET registers, and the deviation from the target output voltage set (the voltage window) by the corresponding BUCKn_UV_THR, BUCKn_OV_THR, VMONn_UV_THR, and the VMONn_OV_THR registers. For the OV and UV threshold of BUCK output monitors to update with the correct timing, the following operating procedures must be followed when updating the _VSET values of the regulators to avoid detection of OV/UV fault:

- BUCK regulators must be enabled at the same time as or earlier than as their VMON, such that the voltage reaches its target value before OV/UV self-test (BIST) is done
- New voltage level must not be set before the start-up has finished and OV/UV self-test (BIST) is completed
- New voltage level must not be set before the previous voltage change (ramp plus settling time) has completed

It is important to note: when a regulator is enabled, a voltage monitor self-test is performed to ensure proper operation. The monitoring function is disabled and gated during this time. 図 7-11 shows the timing diagram of the BUCK regulator UV/OV self-test. 図 7-12 shows the timing diagram of the VMON UV/OV self-test. The monitoring function is activated after the gating period.

The self-test for VCCA, BUCK and VMON voltage monitors is done every time when the monitoring function is enabled and VMON_ABIST_EN=1. The self-test checks that OV and UV comparators are changing their output when the input thresholds are swapped. The self-test assumes that the input voltage is inside OV/UV threshold limits. If the voltage is outside the limits, the self-test fails and BIST_FAIL_INT interrupt is set. In addition, a failed self-test for over-voltage comparator sets the over-voltage interrupt.

Copyright © 2022 Texas Instruments Incorporated

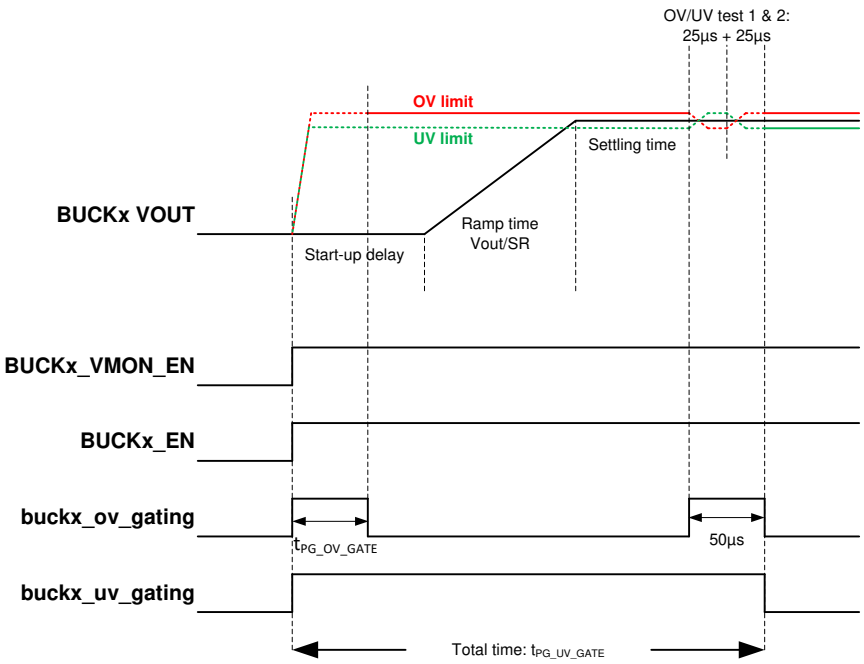

図 7-11. Timing of BUCK Regulator UV/OV Self-Test

The voltage monitors of unused BUCK regulators can be used for external supply rails monitoring. In three-phase configuration, the Voltage Monitor of BUCK3 (on FB_B3 pin) becomes a free available resource for monitoring an external supply voltage. In four-phase configuration, the Voltage Monitor of both BUCK3 (on FB_B3 pin) and BUCK4 (on FB_B4 pin) become free available resources for monitoring two external supply voltages.. The target output voltage is set by the corresponding BUCKn_VSET1, BUCKn_VSET2 registers, and the deviation from the target output voltage set (the voltage window) by the corresponding BUCKn_UV_THR, BUCKn_OV_THR registers. Following aspects need to be taken into account if Voltage Monitors of unused BUCK regulators are used for monitoring external supply rails:

- For voltage monitors of unused BUCK : the maximum nominal supply voltage of the monitored supply rail is 3.3V
- For voltage monitors of unused BUCK regulators : the configured values for the BUCKn_VSET and the BUCKn_SLEW_RATE determine the delay-time for the voltage monitoring to become active after the corresponding BUCKn_VMON_EN bit is set. See equation (2) in セクション 7.3.2.1.3.

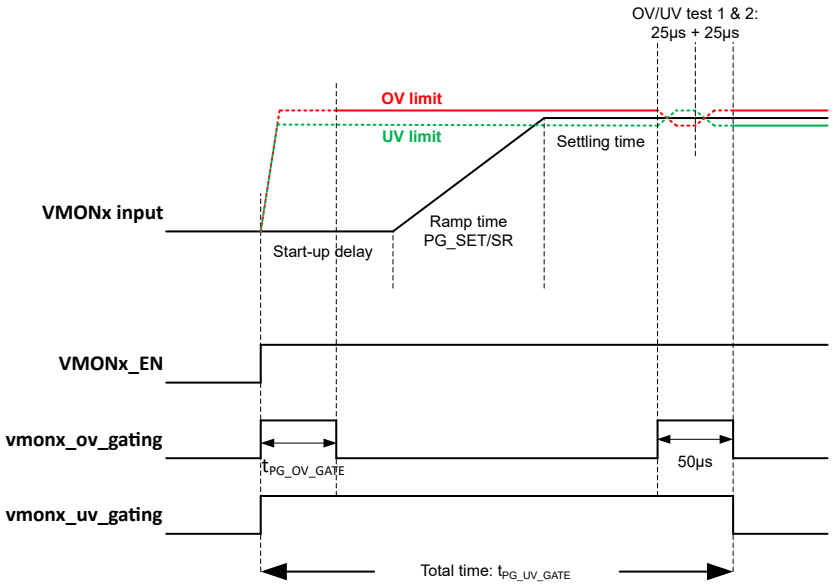

図 7-12. Timing of VMON Input UV/OV Self-Test

The voltage monitoring threshold for the VMONx input pins are shown in 表 7-2.

注

Unless mentioned otherwise in the User's Guide for the orderable part number, for automatically sequenced Voltage Monitors (either as part of automatic sequencing of BUCK regulators, or as stand-alone Voltage Monitor), the LP876242-Q1 unmasks the UV/OV right before the release of the nRSTOUT resp. nRSTOUT_SoC pins. For Voltage Monitors which are enabled through system software (either as associated Voltage Monitor for BUCK regulators, or as stand-alone Voltage Monitor), the corresponding over voltage and under voltage interrupt masking must be enabled before enabling the voltage monitor. The Analog-BIST is performed for the voltage monitor as described in 図 7-11 and 図 7-12. The over voltage and under voltage interrupt masking must be disabled earliest at time calculated by programmed voltage level (Vout) divided by the programmed slew-rate and by adding 500 us time.

注

For Voltage Monitors that are used to monitor external supply voltages, in order to not have a failing self-test or a false-positive UV/OV detection after completion of the self-test, the actual voltage level of the external supply (VOUT_actual) must satisfy following conditions:

- For VOUT > 1V: VOUT_actual = VOUT_typical +/- (75% * Typical UV/OV Threshold – 1%)
- For VOUT ≤ 1V: VOUT_actual = VOUT_typical +/- (Typical UV/OV Threshold – 15mV)

VOUT_typical is the configured power-good voltage level for the used Voltage Monitor in registers BUCKn_VOUT1/2 . This requirement also applies to the voltage on the VCCA pin in case the VCCA UV/OV Monitor is used.

Copyright © 2022 Texas Instruments Incorporated

表 7-2. Monitoring Voltage Selection for VMONx External Voltage Pins

VMONx_PG_SET	Output Voltage [V]		VMONx_PG_SET	Output Voltage [V]		VMONx_PG_SET	Output Voltage [V]		VMONx_PG_SET	Output Voltage [V]		VMONx_PG_SET	Output Voltage [V]		VMONx_PG_SET	Output Voltage [V]	
	VMONx_RANGE = 0	VMONx_RANGE = 1		VMONx_RANGE = 0	VMONx_RANGE = 1		VMONx_RANGE = 0	VMONx_RANGE = 1		VMONx_RANGE = 0	VMONx_RANGE = 1		VMONx_RANGE = 0	VMONx_RANGE = 1		VMONx_RANGE = 0	VMONx_RANGE = 1
0x00	0.3	Reserved	0x0F	0.6	Reserved	0x41	0.85	4.25	0x73	1.1	Reserved	0xAB	1.66	Reserved	0xD6	2.52	Reserved
0x01	0.32	Reserved	0x10	0.605	Reserved	0x42	0.855	4.275	0x74	1.11	Reserved	0xAC	1.68	Reserved	0xD7	2.54	Reserved
0x02	0.34	Reserved	0x11	0.61	Reserved	0x43	0.86	4.3	0x75	1.12	Reserved	0xAD	1.7	Reserved	0xD8	2.56	Reserved
0x03	0.36	Reserved	0x12	0.615	Reserved	0x44	0.865	4.325	0x76	1.13	Reserved	0xAE	1.72	Reserved	0xD9	2.58	Reserved
0x04	0.38	Reserved	0x13	0.62	Reserved	0x45	0.87	4.35	0x77	1.14	Reserved	0xAF	1.74	Reserved	0xDA	2.6	Reserved
0x05	0.4	Reserved	0x14	0.625	Reserved	0x46	0.875	4.375	0x78	1.15	Reserved	0xB0	1.76	Reserved	0xDB	2.62	Reserved
0x06	0.42	Reserved	0x15	0.63	Reserved	0x47	0.88	4.4	0x79	1.16	Reserved	0xB1	1.78	Reserved	0xDC	2.64	Reserved
0x07	0.44	Reserved	0x16	0.635	Reserved	0x48	0.885	4.425	0x7A	1.17	Reserved	0xB2	1.8	Reserved	0xDD	2.66	Reserved
0x08	0.46	Reserved	0x17	0.64	Reserved	0x49	0.89	4.45	0x7B	1.18	Reserved	0xB3	1.82	Reserved	0xDE	2.68	Reserved
0x09	0.48	Reserved	0x18	0.645	Reserved	0x4A	0.895	4.475	0x7C	1.19	Reserved	0xB4	1.84	Reserved	0xDF	2.7	Reserved
0x0A	0.5	Reserved	0x19	0.65	Reserved	0x4B	0.9	4.5	0x7D	1.2	Reserved	0xB5	1.86	Reserved	0xE0	2.72	Reserved
0x0B	0.52	Reserved	0x1A	0.655	Reserved	0x4C	0.905	4.525	0x7E	1.21	Reserved	0xB6	1.88	Reserved	0xE1	2.74	Reserved
0x0C	0.54	Reserved	0x1B	0.66	Reserved	0x4D	0.91	4.55	0x7F	1.22	Reserved	0xB7	1.9	Reserved	0xE2	2.76	Reserved
0x0D	0.56	Reserved	0x1C	0.665	Reserved	0x4E	0.915	4.575	0x80	1.23	Reserved	0xB8	1.92	Reserved	0xE3	2.78	Reserved
0x0E	0.58	Reserved	0x1D	0.67	3.35	0x4F	0.92	4.6	0x81	1.24	Reserved	0xB9	1.94	Reserved	0xE4	2.8	Reserved
			0x1E	0.675	3.375	0x50	0.925	4.625	0x82	1.25	Reserved	0xBA	1.96	Reserved	0xE5	2.82	Reserved
			0x1F	0.68	3.4	0x51	0.93	4.65	0x83	1.26	Reserved	0xBB	1.98	Reserved	0xE6	2.84	Reserved
			0x20	0.685	3.425	0x52	0.935	4.675	0x84	1.27	Reserved	0xBC	2	Reserved	0xE7	2.86	Reserved
			0x21	0.69	3.45	0x53	0.94	4.7	0x85	1.28	Reserved	0xBD	2.02	Reserved	0xE8	2.88	Reserved
			0x22	0.695	3.475	0x54	0.945	4.725	0x86	1.29	Reserved	0xBE	2.04	Reserved	0xE9	2.9	Reserved

Copyright © 2022 Texas Instruments Incorporated

表 7-2. Monitoring Voltage Selection for VMONx External Voltage Pins (continued)

VMONx_PG_SET	Output Voltage [V]		VMONx_PG_SET	Output Voltage [V]		VMONx_PG_SET	Output Voltage [V]		VMONx_PG_SET	Output Voltage [V]		VMONx_PG_SET	Output Voltage [V]		VMONx_PG_SET	Output Voltage [V]	
	VMONx_RANGE = 0	VMONx_RANGE = 1		VMONx_RANGE = 0	VMONx_RANGE = 1		VMONx_RANGE = 0	VMONx_RANGE = 1		VMONx_RANGE = 0	VMONx_RANGE = 1		VMONx_RANGE = 0	VMONx_RANGE = 1		VMONx_RANGE = 0	VMONx_RANGE = 1
			0x23	0.7	3.5	0x55	0.95	4.75	0x87	1.3	Reserved	0xBF	2.06	Reserved	0xEA	2.92	Reserved
			0x24	0.705	3.525	0x56	0.955	4.775	0x88	1.31	Reserved	0xC0	2.08	Reserved	0xEB	2.94	Reserved
			0x25	0.71	3.55	0x57	0.96	4.8	0x89	1.32	Reserved	0xC1	2.1	Reserved	0xEC	2.96	Reserved
			0x26	0.715	3.575	0x58	0.965	4.825	0x8A	1.33	Reserved	0xC2	2.12	Reserved	0xED	2.98	Reserved
			0x27	0.72	3.6	0x59	0.97	4.85	0x8B	1.34	Reserved	0xC3	2.14	Reserved	0xEE	3.0	Reserved
			0x28	0.725	3.625	0x5A	0.975	4.875	0x8C	1.35	Reserved	0xC4	2.16	Reserved	0xEF	3.02	Reserved
			0x29	0.73	3.65	0x5B	0.98	4.9	0x8D	1.36	Reserved	0xC5	2.18	Reserved	0xF0	3.04	Reserved
			0x2A	0.735	3.675	0x5C	0.985	4.925	0x8E	1.37	Reserved	0xC6	2.2	Reserved	0xF1	3.06	Reserved
			0x2B	0.74	3.7	0x5D	0.99	4.95	0x8F	1.38	Reserved	0xC7	2.22	Reserved	0xF2	3.08	Reserved
			0x2C	0.745	3.725	0x5E	0.995	4.975	0x90	1.39	Reserved	0xC8	2.24	Reserved	0xF3	3.1	Reserved
			0x2D	0.75	3.75	0x5F	1.0	5.0	0x91	1.4	Reserved	0xC9	2.26	Reserved	0xF4	3.12	Reserved
			0x2E	0.755	3.775	0x60	1.005	Reserved	0x92	1.41	Reserved	0xCA	2.28	Reserved	0xF5	3.14	Reserved
			0x2F	0.76	3.8	0x61	1.01	Reserved	0x93	1.42	Reserved	0xCB	2.3	Reserved	0xF6	3.16	Reserved
			0x30	0.765	3.825	0x62	1.015	Reserved	0x94	1.43	Reserved	0xCC	2.32	Reserved	0xF7	3.18	Reserved
			0x31	0.77	3.85	0x63	1.02	Reserved	0x95	1.44	Reserved	0xCD	2.34	Reserved	0xF8	3.2	Reserved
			0x32	0.775	3.875	0x64	1.025	Reserved	0x96	1.45	Reserved	0xCE	2.36	Reserved	0xF9	3.22	Reserved
			0x33	0.78	3.9	0x65	1.03	Reserved	0x97	1.46	Reserved	0xCF	2.38	Reserved	0xFA	3.24	Reserved
			0x34	0.785	3.925	0x66	1.035	Reserved	0x98	1.47	Reserved	0xD0	2.4	Reserved	0xFB	3.26	Reserved
			0x35	0.79	3.95	0x67	1.04	Reserved	0x99	1.48	Reserved	0xD1	2.42	Reserved	0xFC	3.28	Reserved
			0x36	0.795	3.975	0x68	1.045	Reserved	0x9A	1.49	Reserved	0xD2	2.44	Reserved	0xFD	3.3	Reserved

Copyright © 2022 Texas Instruments Incorporated

表 7-2. Monitoring Voltage Selection for VMONx External Voltage Pins (continued)

VMONx_PG_SET	Output Voltage [V]		VMONx_PG_SET	Output Voltage [V]		VMONx_PG_SET	Output Voltage [V]		VMONx_PG_SET	Output Voltage [V]		VMONx_PG_SET	Output Voltage [V]		VMONx_PG_SET	Output Voltage [V]	
	VMONx_RANGE = 0	VMONx_RANGE = 1		VMONx_RANGE = 0	VMONx_RANGE = 1		VMONx_RANGE = 0	VMONx_RANGE = 1		VMONx_RANGE = 0	VMONx_RANGE = 1		VMONx_RANGE = 0	VMONx_RANGE = 1		VMONx_RANGE = 0	VMONx_RANGE = 1
			0x37	0.8	4.0	0x69	1.05	Reserved	0x9B	1.5	Reserved	0xD3	2.46	Reserved	0xFE	3.32	Reserved
			0x38	0.805	4.025	0x6A	1.055	Reserved	0x9C	1.51	Reserved	0xD4	2.48	Reserved	0xFF	3.34	Reserved
			0x39	0.81	4.05	0x6B	1.06	Reserved	0x9D	1.52	Reserved	0xD5	2.5	Reserved			
			0x3A	0.815	4.075	0x6C	1.065	Reserved	0x9E	1.53	Reserved						
			0x3B	0.82	4.1	0x6D	1.07	Reserved	0x9F	1.54	Reserved						
			0x3C	0.825	4.125	0x6E	1.075	Reserved	0xA0	1.55	Reserved						
			0x3D	0.83	4.15	0x6F	1.08	Reserved	0xA1	1.56	Reserved						
			0x3E	0.835	4.175	0x70	1.085	Reserved	0xA2	1.57	Reserved						
			0x3F	0.84	4.2	0x71	1.09	Reserved	0xA3	1.58	Reserved						
			0x40	0.845	4.225	0x72	1.095	Reserved	0xA4	1.59	Reserved						
									0xA5	1.6	Reserved						
									0xA6	1.61	Reserved						
									0xA7	1.62	Reserved						
									0xA8	1.63	Reserved						
									0xA9	1.64	Reserved						
									0xAA	1.65	Reserved						

7.3.5 General-Purpose I/Os (GPIO Pins)

The LP876242-Q1 device integrates ten configurable general-purpose I/Os that are multiplexed with alternative features as listed in Pin Configuration and Functions.

For GPIOs characteristics, refer to Electrical Characteristics tables for Digital Input Signal Parameters and Digital Output Signal Parameters.

When configured as primary functions, all GPIOs are controlled through the following set of registers bits under the individual GPIOn_CONF register.

- GPIOn_DEGLITCH_EN: Enables the 8 µs deglitch time for each GPIO pin (input)
- GPIOn_PU_PD_EN: Enables the internal pull up or pull down resistor connected to each GPIO pin
- GPIOn_PU_SEL: Selects the pull up or the pull down resistor to be connected when GPIOn_PU_PD_EN = '1'. '1' = pull-up resistor selected, '0' = pull-down resistor selected
- GPIOn_OD: Configures the GPIO pin (output) as: '1' = open drain, '0' = push-pull
- GPIOn_DIR: Configures the input or output direction of each GPIO pin

Each GPIO event can generate an interrupt on a rising edge, falling edge, or both, configured through the GPIOn_FALL_MASK and the GPIOn_RISE_MASK register bits. A GPIO-interrupt applies when the primary function (general-purpose I/O) has been selected and also for the following alternative functions:

- ENABLE
- EN_DRV
- nRSTOUT
- nRSTOUT_SOC
- PGOOD
- nERR_MCU
- TRIG_WDOG
- NSLEEP1, NSLEEP2
- WKUP1, WKUP2

The GPIOn_SEL[2:0] register bits under the GPIOn_CONF registers control the selection between a primary and an alternative function. When a pre-defined function is selected, some predetermined IO characteristics (such as pullup, pulldown, push-pull or open drain) for the pin are enforced regardless of the settings of the associated GPIO configuration register. Please note that if the GPIOn_SEL[2:0] is changed during device operation, a signal glitch may occur, which may cause digital malfunction, especially if it involves a clock signal such as SCL_I2C2, SCL_SPMI, SYNCCLKIN, or SYNCCLKOUT. Please refer to Digital Signal Descriptions for more detail on the predetermined IO characteristics for each pre-defined digital interface function.

All GPIOs can be configured as a wake-up input when it is configured as a WKUP1 or a WKUP2 signal. All GPIOs can also be configured as a NSLEEP1 or a NSLEEP2 input. For more information regarding the usage of the NSLEEPx pins and the WKUPx pins, please refer to セクション 7.4.1.2.4.3 and セクション 7.4.1.2.4.4.

Any of the GPIO pin can also be configured as part of the power-up sequence to enable external devices such as external BUCKs when it is configured as a general-purpose output port.

The nINT pin and the GPIO pins assigned as EN_DRV , nRSTOUT and nRSTOUT_SOC have readback monitoring to detect errors on the signals. The monitoring of the GPIO pin assigned as EN_DRV checks for mismatch in both low and high levels. For the nINT pin and the GPIO pins assigned as nRSTOUT and nRSTOUT_SOC, the readback monitoring only checks for mismatches in the low level, therefore it is allowed to combine these signals with other external pull-down sources. The readback mismatch is continuously monitored without deglitch circuitry during operation, and the monitoring is gated for $t_{gate_readback}$ period when the signal state is changed or when a new function is selected for the GPIO pin with the GPIOn_SEL bits. NINT_READBACK_INT, EN_DRV_READBACK_INT, NRSTOUT_READBACK_INT, and NRSTOUT_SOC_READBACK_INT are the interrupt bits that are set in an event of a readback mismatch for these pins, respectively.

注

All GPIO pin are set to generic input pins with resistive pull-down before NVM memory is loaded during device power up. Therefore, if any GPIOs has external pull-up resistors connecting to a voltage domain that is energized before the NVM memory is loaded, the GPIO pin is pulled high before the configuration for the pin is loaded from the NVM.

Copyright © 2022 Texas Instruments Incorporated

注

For GPIO pins with internal pull down enabled, additional leakage current flows into the GPIO pin if this pin is pulled-up to a voltage higher than the voltage level of its output power domain. If the internal pull down must be enabled, please use a resistor divider to divide down the input voltage, or use a series resistor to connect to the input source and ensure the voltage level at the GPIO pin is below the voltage level of its output power domain.

7.3.6 Thermal Monitoring

The LP876242-Q1 device includes several thermal monitoring functions for internal thermal protection of the PMIC.

The LP876242-Q1 device integrates thermal detection modules to monitor the temperature of the die. These modules are placed on opposite sides of the device and close to the BUCK modules. An over-temperature condition at either module first generates a warning to the system, and if the temperature continues to rise, then a switch-off of the PMIC device can occur before damage to the die.

Three thermal protection levels are available. One of these protections is a thermal warning function described in セクション 7.3.6.1, that sends an interrupt to software. Software is expected to close any noncritical running tasks to reduce power. The second and third protections are the thermal shutdown (TS) function described in セクション 7.3.6.2, that begins device shutdown orderly or immediately.

Thermal monitoring is automatically enabled when one of the BUCK outputs is enabled within the mission states. The thermal monitoring is disabled in the LP_STANDBY state, when only the internal regulator is enabled, to minimize the device power consumption. Indication of a thermal warning event is written to the TWARN_INT register.

The current consumption of the thermal monitoring can be decreased in the mission states when the low power dissipation is important. If LPM_EN bit is set and the temperature is below thermal warning level in all thermal detection modules, only one thermal detection module is monitored. If the temperature rises in this module, monitoring in all thermal detection modules is started.

If the die temperature of the LP876242-Q1 device continues to rise while the device is in mission state, an TSD_ORD_INT or TSD_IMM_INT interrupt is generated, causing a SEVERE or MODERATE error trigger (respectively) in the state machine. While the sequencing and error handling is NVM memory dependent, TI recommends a sequenced shutdown for MODERATE errors, and an immediate shutdown, using resistive discharging, for SEVERE errors to prevent damage to the device. The system cannot restart until the temperature falls below the thermal warning threshold.

7.3.6.1 Thermal Warning Function

The thermal monitor provides a warning to the host processor through the interrupt system when the temperature reaches within a cautionary range. The threshold value must be set to less than the thermal shutdown threshold.

The integrated thermal warning function provides the MCU an early warning of over-temperature condition. This monitoring system is connected to the interrupt controller and can send an TWARN_INT interrupt when the temperature is higher than the preset threshold. The LP876242-Q1 device uses the TWARN_LEVEL register bit to set the thermal warning threshold temperature at 130°C or 140°C. There is no hysteresis for the thermal warning level.

When the power-management software triggers an interrupt, immediate action must be taken to reduce the amount of power drawn from the PMIC device (for example, noncritical applications must be closed).

7.3.6.2 Thermal Shutdown

The thermal shutdown detector monitors the temperature on the die. If the junction reaches a temperature at which damage can occur, a switch-off transition is initiated and a thermal shutdown event is written into a status register. There are two levels of thermal shutdown threshold. When the die temperature reaches the $T_{SD_orderly}$ level, the LP876242-Q1 device performs an orderly shutdown of all output power rails. If the die temperature

raises rapidly and reaches the T_{SD_imm} level before the orderly shutdown process completes, the LP876242-Q1 device performs an immediate shutdown with activated pull-down on all output power rails, in order to turn off all of the output power rails as rapidly as possible. After the thermal shutdown takes place, the system cannot restart until the die temperature is below the thermal warning threshold.

Copyright © 2022 Texas Instruments Incorporated

7.3.7 Interrupts

The interrupt registers in the device are organized in hierarchical fashion. The interrupts are grouped into the following categories:

BUCK ERROR	These interrupts indicate over-voltage (OV), under-voltage (UV), short-circuit (SC), residual voltage (also indicated as SC interrupt) and over-current (ILIM) error conditions found on the BUCK regulators .
VMON ERROR	These interrupts indicate OV and UV or residual voltage error conditions found on the VMON1 and VMON2 inputs and on the VCCA supply.
SEVERE ERROR	These errors indicate severe device error conditions, such as thermal shutdown, PFSM sequencing and execution error and VCCA over-voltage, that causes the device to trigger the PFSM to execute immediate shutdown of all digital outputs, external voltage rails and monitors, and proceed to the Safe Recovery State.
MODERATE ERROR	These interrupts provide warnings to the system to indicate multiple restart attempts from SAFE RECOVERY state exceeding the allowed recovery count, multiple warm-reset executions exceeding the allowed recovery count, SPMI communication error, register CRC error, BIST failure, read-back error on nRSTOUT or nINT pins, or junction temperature reaching orderly shutdown level. These warning causes the device to trigger the PFSM to execute orderly shutdown of all digital outputs, external voltage rails and monitors, and proceed to the SAFE RECOVERY state.[1]
MISCELLANEOUS WARNING	These interrupts provide information to the system to indicate detection of WDOG or ESM errors, die temperature crossing thermal warning threshold, device passing BIST test, or external sync clock availability.
START-UP SOURCE	These interrupts provide information to the system on the mechanism that caused the device to start up, which includes FSD, the activation of the ENABLE pin
GPIO DETECTION	These interrupts indicate the High/Rising-Edge or the Low/Falling-Edge detection at the GPIO1 through GPIO10 pins.
FSM ERROR INTERRUPT	These interrupts indicate the detection of an error that causes the device mission state changes.

All interrupts are logically combined on a single output pin, nINT (active low). The host processor can read the INT_TOP register to find the interrupt registers to find out the source of the interrupt, and write '1' to the corresponding interrupt register bit to clear the interrupt. This mechanism ensures when a new interrupt occurs while the nINT pin is still active, all of the corresponding interrupt register bits retain the interrupt source information until it is cleared by the host.

Some of the interrupts and EN_DRV status are also sent to host during SPI communication. See セクション 7.5.3 for more information on SPI status signals.

Hierarchical Structure of Interrupt Registers shows the hierarchical structure of the interrupt registers according to the categories described above. The purpose of this register structure is to reduce the number of interrupt register read cycles the host has to perform in order to identify the source of the interrupt. Summary of Interrupt Signals summarizes the trigger and the clearing mechanism for all of the interrupt signals. This table also shows which interrupt sources can be masked by setting the corresponding mask register to '1'. When an interrupt is masked, the interrupt bit is not updated when the associated event occurs, the nINT line is not affected, and the event is not recorded. If an interrupt is masked after the event occurred, the interrupt register bit reflects the event until the bit is cleared. While the event is masked, the interrupt register bit is not over-written when a new event occurs.

[1] The SEVERE ERROR and the MODERATE ERROR are handled in NVM memory but TI requires that the NVM pre-configurable finite state machine (PFSM) settings always follow this described error handling to meet device specifications.

Copyright © 2022 Texas Instruments Incorporated

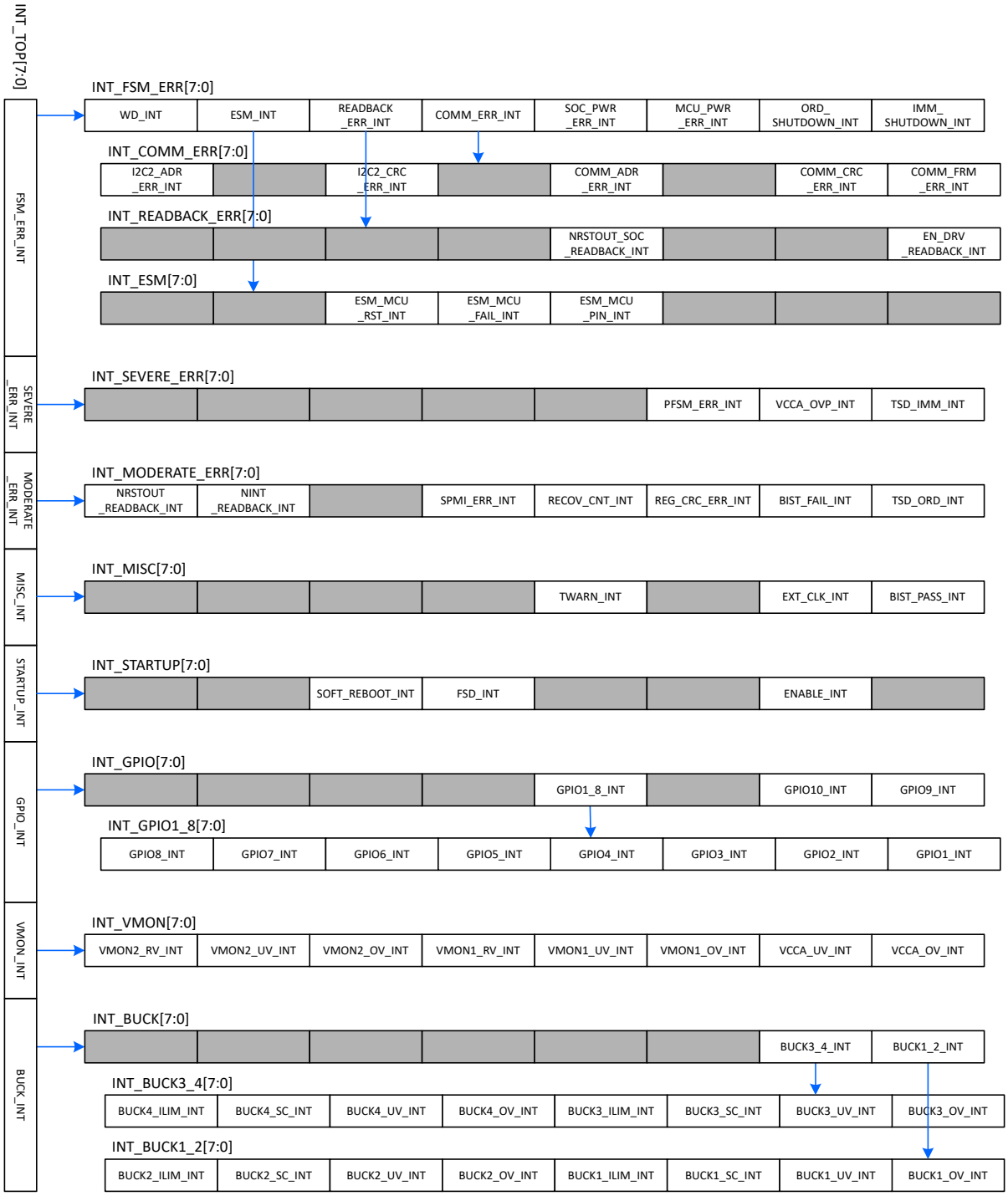

図 7-13. Hierarchical Structure of Interrupt Registers

Copyright © 2022 Texas Instruments Incorporated

表 7-3. Summary of Interrupt Signals

EVENT	TRIGGER FOR FSM	RESULT [1]	RECOVERY	INTERRUPT BIT	MASK FOR INTERRUPT	LIVE STATUS BIT	INTERRUPT CLEAR
BUCK regulator forward current limit triggered	**EN_ILIM_FSM_CTRL=1:** According to BUCKn_GRP_SEL and x_RAIL_TRIG bits **EN_ILIM_FSM_CTRL=0:** N/A	**EN_ILIM_FSM_CTRL=1:** Transition according to FSM trigger and interrupt **EN_ILIM_FSM_CTRL=0:** Interrupt only	Depends on PFSM configuration, see PFSM transition diagram	BUCKn_ILIM_INT = 1	BUCKn_ILIM_MASK	BUCKn_ILIM_STAT	Write 1 to BUCKn_ILIM_INT bit Interrupt is not cleared if current limit violation is active
BUCK output or switch short circuit detected	According to BUCKn_GRP_SEL and x_RAIL_TRIG bits	Regulator disable and transition according to FSM trigger and interrupt	Depends on PFSM configuration, see PFSM transition diagram	BUCKn_SC_INT = 1	N/A	N/A	Write 1 to BUCKn_SC_INT bit Interrupt is not cleared if the BUCKn is enabled and the BUCKn output voltage is below the short-circuit threshold after elapse of expected ramp-up time interval
BUCK output residual voltage violation	**BUCKn_RV_SEL = 1** According to BUCKn_GRP_SEL and x_RAIL_TRIG bits **BUCKn_RV_SEL = 0** N/A	**BUCKn_RV_SEL = 1** Regulator disable and transition according to FSM trigger and interrupt **BUCKn_RV_SEL = 0** N/A	Depends on PFSM configuration, see PFSM transition diagram	BUCKn_SC_INT = 1	N/A	N/A	Write 1 to BUCKn_SC_INT bit If BUCKn_SC_INT was set due to a detected residual voltage, this bit can only be read by the MCU if the residual voltage condition is no longer present and the device has performed a succesfull power-up sequence
BUCK regulator overvoltage	According to BUCKn_GRP_SEL and x_RAIL_TRIG bits	Transition according to FSM trigger and interrupt	Depends on PFSM configuration, see PFSM transition diagram	BUCKn_OV_INT = 1	BUCKn_OV_MASK	BUCKn_OV_STAT	Write 1 to BUCKn_OV_INT bit Interrupt is not cleared if the associated fault condition is still present
BUCK regulator undervoltage	According to BUCKn_GRP_SEL and x_RAIL_TRIG bits	Transition according to FSM trigger and interrupt	Depends on PFSM configuration, see PFSM transition diagram	BUCKn_UV_INT = 1	BUCKn_UV_MASK	BUCKn_UV_STAT	Write 1 to BUCKn_UV_INT bit Interrupt is not cleared if the associated fault condition is still present
VCCA input overvoltage monitoring	According to VCCA_GRP_SEL and x_RAIL_TRIG bits	Transition according to FSM trigger and interrupt	Depends on PFSM configuration, see PFSM transition diagram	VCCA_OV_INT = 1	VCCA_OV_MASK	VCCA_OV_STAT	Write 1 to VCCA_OV_INT bit Interrupt is not cleared if the associated fault condition is still present
VCCA input undervoltage monitoring	According to VCCA_GRP_SEL and x_RAIL_TRIG bits	Transition according to FSM trigger and interrupt	Depends on PFSM configuration, see PFSM transition diagram	VCCA_UV_INT = 1	VCCA_UV_MASK	VCCA_UV_STAT	Write 1 to VCCA_UV_INT bit Interrupt is not cleared if the associated fault condition is still present
VMONx input overvoltage monitoring	According to VMONx_GRP_SEL and X_RAIL_TRIG bits	Transition according to FSM trigger and interrupt	Depends on PFSM configuration, see PFSM transition diagram	VMONx_OV_INT = 1	VMONx_OV_MASK	VMONx_OV_STAT	Write 1 to VMONx_OV_INT bit Interrupt is not cleared if the associated fault condition is still present
VMONx input undervoltage monitoring	According to VMONx_GRP_SEL and X_RAIL_TRIG bits	Transition according to FSM trigger and interrupt	Depends on PFSM configuration, see PFSM transition diagram	VMONx_UV_INT = 1	VMONx_UV_MASK	VMONx_UV_STAT	Write 1 to VMONx_UV_INT bit Interrupt is not cleared if the associated fault condition is still present

表 7-3. Summary of Interrupt Signals (continued)

EVENT	TRIGGER FOR FSM	RESULT [1]	RECOVERY	INTERRUPT BIT	MASK FOR INTERRUPT	LIVE STATUS BIT	INTERRUPT CLEAR
VMONx residual voltage violation	**VMONx_RV_SEL = 1** According to VMONn_GRP_SEL and x_RAIL_TRIG bits **VMONx_RV_SEL = 0** N/A	**VMONx_RV_SEL = 1** Transition according to FSM trigger and interrupt **VMONx_RV_SEL = 0** N/A	Depends on PFSM configuration, see PFSM transition diagram	VMONx_RV_INT = 1	N/A	N/A	Write 1 to VMONx_RV_INT bit
Thermal warning	N/A	Interrupt only	Not valid	TWARN_INT = 1	TWARN_MASK	TWARN_STAT	Write 1 to TWARN_INT bit Interrupt is not cleared if temperature is above thermal warning level
Thermal shutdown, orderly sequenced	ORDERLY_SHUTDOWN (MODERATE_ERR_INT)	All regulators disabled and Output GPIOx set to low in a sequence and interrupt[1]	Automatic start-up to STARTUP_DEST[1:0] state after temperature is below TWARN level	TSD_ORD_INT = 1	N/A	TSD_ORD_STAT	Write 1 to TSD_ORD_INT bit This interrupt bit can only be read by the MCU after the device has recovered from a previously occurred over-temperature event.
Thermal shutdown, immediate	IMMEDIATE_SHUTDOWN (SEVERE_ERR_INT)	All regulators disabled with pull-down resistors and Output GPIOx set to low immediately and interrupt[1]	Automatic start-up to STARTUP_DEST[1:0] state after temperature is below TWARN level	TSD_IMM_INT = 1	N/A	TSD_IMM_STAT	Write 1 to TSD_IMM_INT bit This interrupt bit can only be read by the MCU after the device has recovered from a previously occurred over-temperature event.
BIST error	ORDERLY_SHUTDOWN (MODERATE_ERR_INT)	All regulators disabled and Output GPIOx set to low immediately and interrupt[1]	Automatic start-up to STARTUP_DEST[1:0] state	BIST_FAIL_INT = 1	BIST_FAIL_MASK	N/A	Write 1 to BIST_FAIL_INT bit
Register CRC error	ORDERLY_SHUTDOWN (MODERATE_ERR_INT)	All regulators disabled and Output GPIOx set to low immediately and interrupt[1]	Automatic start-up to STARTUP_DEST[1:0] state	REG_CRC_ERR_INT = 1	REG_CRC_ERR_MASK	N/A	Write 1 to REG_CRC_ERR_INT bit
SPMI communication error	ORDERLY_SHUTDOWN (MODERATE_ERR_INT)	All regulators disabled and Output GPIOx set to low immediately and interrupt[1]	Automatic start-up to STARTUP_DEST[1:0] state	SPMI_ERR_INT = 1	SPMI_ERR_MASK	N/A	Write 1 to SPMI_ERR_INT bit
SPI frame error	N/A	Interrupt only	Not valid	COMM_FRM_ERR_INT = 1	COMM_FRM_ERR_MASK	N/A	Write 1 to COMM_FRM_ERR_INT bit
I2C1 or SPI CRC error	N/A	Interrupt only	Not valid	COMM_CRC_ERR_INT = 1	COMM_CRC_ERR_MASK	N/A	Write 1 to COMM_CRC_ERR_INT bit
I2C1 or SPI address error[4]	N/A	Interrupt only	Not valid	COMM_ADR_ERR_INT = 1	COMM_ADR_ERR_MASK	N/A	Write 1 to COMM_ADR_ERR_INT bit
I2C2 CRC error	N/A	Interrupt only	Not valid	I2C2_CRC_ERR_INT = 1	I2C2_CRC_ERR_MASK	N/A	Write 1 to I2C2_CRC_ERR_INT bit
I2C2 address error[4]	N/A	Interrupt only	Not valid	I2C2_ADR_ERR_INT = 1	I2C2_ADR_ERR_MASK	N/A	Write 1 to I2C2_ADR_ERR_INT bit
PFSM error	IMMEDIATE_SHUTDOWN (SEVERE_ERR_INT)	All regulators disabled with pull-down resistors and Output GPIOx set to low immediately and interrupt[1]	Automatic start-up to STARTUP_DEST[1:0] state. If previous PFSM_ERR_INT is pending, VCCA power cycle needed for recovery.	PFSM_ERR_INT = 1		N/A	Write 1 to PFSM_ERR_INT bit

Copyright © 2022 Texas Instruments Incorporated

表 7-3. Summary of Interrupt Signals (continued)

EVENT	TRIGGER FOR FSM	RESULT [1]	RECOVERY	INTERRUPT BIT	MASK FOR INTERRUPT	LIVE STATUS BIT	INTERRUPT CLEAR
EN_DRV pin readback error (monitoring high and low states)	N/A	Interrupt only	Not valid	EN_DRV_READBACK_INT = 1	EN_DRV_READBACK_MASK	EN_DRV_READBACK_STAT	Write 1 to EN_DRV_READBACK_INT bit Interrupt is not cleared if the associated fault condition is still present
NINT pin readback error (monitoring low state)	ORDERLY_SHUTDOWN (MODERATE_ERR_INT)	All regulators disabled and Output GPIOx set to low immediately and interrupt[1]	Automatic start-up to STARTUP_DEST[1:0] state	NINT_READBACK_INT = 1	NINT_READBACK_MASK	NINT_READBACK_STAT	Write 1 to NINT_READBACK_INT bit Interrupt is not cleared if the associated fault condition is still present
NRSTOUT pin readback error (monitoring low state)	ORDERLY_SHUTDOWN (MODERATE_ERR_INT)	All regulators disabled and Output GPIOx set to low immediately and interrupt[1]	Automatic start-up to STARTUP_DEST[1:0] state	NRSTOUT_READBACK_INT = 1	NRSTOUT_READBACK_MASK	NRSTOUT_READBACK_STAT	Write 1 to NRSTOUT_READBACK_INT bit Interrupt is not cleared if the associated fault condition is still present
NRSTOUT_SOC pin readback error (monitoring low state)	N/A	Interrupt only	Not valid	NRSTOUT_SOC_READBACK_INT = 1	NRSTOUT_SOC_READBACK_MASK	NRSTOUT_SOC_READBACK_STAT	Write 1 to NRSTOUT_SOC_READBACK_INT bit Interrupt is not cleared if the associated fault condition is still present
Fault detected by MCU ESM (level mode: low level detected, PWM mode: PWM signal timing violation	N/A	Interrupt only	Not valid	ESM_MCU_PIN_INT = 1	ESM_MCU_PIN_MASK	N/A	Write 1 to ESM_MCU_PIN_INT bit Interrupt is not cleared if the associated fault condition is still present
Fault detected by MCU ESM (level mode: low level longer than DELAY1 time, PWM mode: ESM error counter > FAIL_THR longer than DELAY1 time)	N/A	Interrupt and EN_DRV = 0 (configurable)	Not valid	ESM_MCU_FAIL_INT = 1	ESM_MCU_FAIL_MASK	N/A	Write 1 to ESM_MCU_FAIL_INT bit Interrupt is not cleared if the associated fault condition is still present
Fault detected by MCU ESM (level mode: low level longer than DELAY1+DELAY2 time, PWM mode: ESM error counter > FAIL_THR longer than DELAY1+DELAY2 time)	ESM_MCU_RST	Interrupt and Warm Reset (EN_DRV = 0 and NRSTOUT and NRSTOUT_SOC toggle)[1]	Automatically returns to the current operating state after the completion of warm reset	ESM_MCU_RST_INT = 1	ESM_MCU_RST_MASK	N/A	Write 1 to ESM_MCU_RST_INT bit This bit can only be read by the MCU after the LP876242-Q1 has executed a warm-reset and the recovery counter does not exceed the recovery threshold
External clock is expected, but it is not available or the frequency is not in the valid range	N/A	Interrupt only	Not valid	EXT_CLK_INT = 1[2]	EXT_CLK_MASK	EXT_CLK_STAT	Write 1 to EXT_CLK_INT bit Interrupt is not cleared if the associated fault condition is still present
BIST completed successfully	N/A	Interrupt only	Not valid	BIST_PASS_INT = 1	BIST_PASS_MASK	N/A	Write 1 to BIST_PASS_INT bit
Watchdog fail counter above fail threshold	N/A	Interrupt and EN_DRV = 0	Clear interrupt and WD_FAIL_CNT < WD_FAIL_TH	WD_FAIL_INT = 1	N/A	N/A	Write 1 to WD_FAIL_INT bit
Watchdog fail counter above reset threshold	WD_RST (if WD_RST_EN = 1)	Interrupt and Warm Reset if WD_RST_EN = 1 (EN_DRV = 0 and NRSTOUT and NRSTOUT_SOC toggle)[1]	Automatically returns to the current operating state after the completion of warm reset	WD_RST_INT = 1	N/A	N/A	Write 1 to WD_RST_INT bit This bit can only be read by the MCU after the LP876242-Q1 has executed a warm-reset and the recovery counter does not exceed the recovery threshold

表 7-3. Summary of Interrupt Signals (continued)

EVENT	TRIGGER FOR FSM	RESULT [1]	RECOVERY	INTERRUPT BIT	MASK FOR INTERRUPT	LIVE STATUS BIT	INTERRUPT CLEAR
Watchdog long window timeout	WD_RST	Interrupt and Warm Reset (EN_DRV = 0 and NRSTOUT and NRSTOUT_SOC toggle)[1]	Automatically returns to the current operating state after the completion of warm reset	WD_LONGWIN_TIMEOUT_INT = 1	N/A	N/A	Write 1 to WD_LONGWIN_TIMEOUT_INT bit This bit can only be read by the MCU after the LP876242-Q1 has executed a warm-reset and the recovery counter does not exceed the recovery threshold
Low state in ENABLE pin	TRIGGER_FORCE_STANDBY/ TRIGGER_FORCE_LP_STANDBY	Transition to STANDBY or LP_STANDBY depending on the LP_STANDBY_SEL bit setting[1]	ENABLE pin rise	N/A	N/A	N/A	N/A
ENABLE pin rise	TRIGGER_SU_x	[1]	Not valid	ENABLE_INT = 1	ENABLE_MASK	ENABLE_STAT	Write 1 to ENABLE_INT bit
Fault causing orderly shutdown	ORDERLY_SHUTDOWN	All regulators disabled and Output GPIOx set to low in a sequence and interrupt[1]	Automatic start-up to STARTUP_DEST[1:0] state	ORD_SHUTDOWN_INT	ORD_SHUTDOWN_MASK	N/A	Write 1 to ORD_SHUTDOWN_INT
Fault causing immediate shutdown	IMMEDIATE_SHUTDOWN	All regulators disabled (depending on NVM configuration with or without pull-down resistors) and Output GPIOx set to low immediately and interrupt[1]	Automatic start-up to STARTUP_DEST[1:0] state	IMM_SHUTDOWN_INT	IMM_SHUTDOWN_MASK	N/A	Write 1 to IMM_SHUTDOWN_INT
Power supply error for MCU	MCU_POWER_ERROR	Transition according to FSM trigger and interrupt	Depends on PFSM configuration, see PFSM transition diagram	MCU_PWR_ERR_INT	MCU_PWR_ERR_MASK	N/A	Write 1 to MCU_PWR_ERR_INT
Power supply error for SOC	SOC_POWER_ERROR	Transition according to FSM trigger and interrupt	Depends on PFSM configuration, see PFSM transition diagram	SOC_PWR_ERR_INT	SOC_PWR_ERR_MASK	N/A	Write 1 to SOC_PWR_ERR_INT
VCCA over-voltage ($VCCA_{OVP}$)	IMMEDIATE_SHUTDOWN (SEVERE_ERR_INT)	All regulators disabled with pull-down resistors and Output GPIOx set to low immediately and interrupt[1]	Automatic start-up to STARTUP_DEST[1:0] state after VCCA voltage is below $VCCA_{OVP}$	VCCA_OVP_INT = 1	N/A	VCCA_OVP_STAT	Write 1 to VCCA_OVP _INT bit This bit can only be read by the MCU if VCCA < $VCCA_{OVP}$ level. As long as VCCA > $VCCA_{OVP}$ level, device stays in SAFE RECOVEY state, and hence this interrupt cannot be not cleared.
GPIO interrupt	According to GPIOx_FSM_MASK and GPIOx_FSM_MASK_POL bits	Transition according to FSM trigger and interrupt	Not valid	GPIOx_INT = 1	GPIOx_RISE_MASK GPIOx_FALL_MASK	GPIOx_IN	Write 1 to GPIOx_INT bit
WKUP1 signals	WKUP1	Transition to ACTIVE state and interrupt[1]	Not valid	N/A	GPIOx_RISE_MASK GPIOx_FALL_MASK	GPIOx_IN	Write 1 to GPIOx_INT bit
WKUP2 signals	WKUP2	Transition to MCU ONLY state and interrupt[1]	Not valid	N/A	GPIOx_RISE_MASK GPIOx_FALL_MASK	GPIOx_IN	Write 1 to GPIOx_INT bit
NSLEEP1 signal, NSLEEP1B bit	According to NSLEEP1 and NSLEEP2	State transition based on NSLEEP1 and NSLEEP2	Not valid	N/A	NSLEEP1_MASK	GPIOx_IN	N/A
NSLEEP2 signal, NSLEEP2B bit	According to NSLEEP1 and NSLEEP2	State transition based on NSLEEP1 and NSLEEP2	Not valid	N/A	NSLEEP2_MASK	GPIOx_IN	N/A
LDOVINT over- or undervoltage	Reset condition for all logic circuits	All regulators disabled with pull-down resistors and Output GPIOx set to low immediately[1]	Valid LDOVINT voltage	N/A	N/A	N/A	N/A

Copyright © 2022 Texas Instruments Incorporated

表 7-3. Summary of Interrupt Signals (continued)

EVENT	TRIGGER FOR FSM	RESULT [1]	RECOVERY	INTERRUPT BIT	MASK FOR INTERRUPT	LIVE STATUS BIT	INTERRUPT CLEAR
Main clock outside valid frequency	Reset condition for all logic circuits	All regulators disabled with pull-down resistors and Output GPIOx set to low immediately[1]	VCCA power cycle	N/A	N/A	N/A	N/A
Recovery counter limit exceeded[3]	ORDERLY_SHUTDOWN	All regulators disabled and Output GPIOx set to low in a sequence[1]	VCCA power cycle	N/A	N/A	N/A	N/A
VCCA supply falling below $VCCA_{UVLO}$	Reset condition for all logic circuits	All regulators disabled with pull-down resistors and Output GPIOx set to low immediately[1]	VCCA voltage rising	N/A	N/A	N/A	N/A
First supply detection, VCCA supply rising above $VCCA_{UVLO}$	TRIGGER_SU_x	Start-up to STARTUP_DEST[1:0] state and interrupt[1]	Not valid	FSD_INT = 1	FSD_MASK	N/A	Write 1 to FSD_INT bit

(1) The results shown in this column are selected to meet functional safety assumptions and device specifications. The actual results can be configured differently in NVM memory. TI recommends reviewing of the system and device functional safety goal and documentation before deviating from these recommendations.
(2) Interrupt is generated during clock detector operation and in case clock is not available when clock detector is enabled.
(3) This event does not occur if RECOV_CNT_THR = 0, even though RECOV_CNT continues to accumulate and increase, and eventually saturates when it reaches the maximum count of 15.
(4) I2C1, I2C2, or SPI address error only occur in safety applications if the interface CRC feature is enabled, when both I2C1_SPI_CRC_EN and I2C2_CRC_EN are set to '1'.

7.3.8 Watchdog (WD)

The watchdog monitors the correct operation of the MCU. This watchdog requires specific messages from the MCU in specific time intervals to detect correct operation of the MCU. The MCU can control the logic-level of the pin when the watchdog detects correct operation of the MCU. When the watchdog detects an incorrect operation of the MCU, the LP876242-Q1 device pulls the pin low . This pin can be used in the application as a control-signal to deactivate the power output stages, for example a motor driver, in case of incorrect operation of the MCU.

The watchdog has two different modes that are defined as follows:

Trigger mode In trigger mode, the MCU applies a pulse signal with a minimum pulse width of t_{WD_pulse} on the pre-assigned GPIO input pin to send the required watchdog trigger. To select this mode, the MCU must clear bit WD_MODE_SELECT. Watchdog Trigger Mode provides more details.

Q&A (question and answer) mode In Q&A mode, the MCU sends watchdog answers through the I2C bus . To select this mode, the MCU must set bit WD_MODE_SELECT. Watchdog Question-Answer Mode provides more details.

7.3.8.1 Watchdog Fail Counter and Status

The watchdog includes a watchdog fail counter WD_FAIL_CNT[3:0] that increments because of *bad events* or decrements because of *good events*. Furthermore, the watchdog includes two configurable thresholds:

1. Fail-threshold (configurable through bits WD_FAIL_TH[2:0])
2. Reset-threshold (configurable through bits WD_RST_TH[2:0])

When the WD_FAIL_CNT[3:0] counter value is less than or equal to the configured Watchdog-Fail threshold (WD_FAIL_TH[2:0]) and bit =1, the MCU can set the ENABLE_DRV bit when no other error-flags are set.

When the WD_FAIL_CNT[3:0] counter value is greater than the configured Watchdog-Fail threshold (WD_FAIL_CNT[3:0] > WD_FAIL_TH[2:0]), the device clears the ENABLE_DRV bit, sets the error-flag , and pulls the nINT pin low.

When the WD_FAIL_CNT[3:0] counter value is greater than the configured Watchdog-Fail plus Watchdog-Reset threshold (WD_FAIL_CNT[3:0] > (WD_FAIL_TH[2:0] + WD_RST_TH[2:0])) and the watchdog-reset function is enabled (configuration bit WD_RST_EN=1), the device generates a WD_ERROR trigger in the state machine (see PFSM Trigger Selections) and sets the error-flag , and pulls the nINT pin low.

The device clears the WD_FAIL_CNT[3:0] each time the watchdog enters the Long Window. The status bits and are latched until the MCU writes a ‘1’ to these bits.

Overview of Watchdog Fail Counter Value Ranges and Corresponding Device Status gives an overview of the Watchdog Fail Counter value ranges and the corresponding device status.

表 7-4. Overview of Watchdog Fail Counter Value Ranges and Corresponding Device Status

Watchdog Fail Counter value WD_FAIL_CNT[3:0]	Device Status
WD_FAIL_CNT[3:0] ≤ WD_FAIL_TH[2:0]	MCU can set the ENABLE_DRV bit if =1 and no other error-flags are set
WD_FAIL_TH[2:0] < WD_FAIL_CNT[3:0] ≤ (WD_FAIL_TH[2:0] + WD_RST_TH[2:0])	The device clears the ENABLE_DRV bit, sets error-flag and pulls the nINT pin low
WD_FAIL_CNT[3:0] > (WD_FAIL_TH[2:0] + WD_RST_TH[2:0])	If configuration bit WD_RST_EN=1, device generates WD_ERROR trigger in the state machine and reacts as defined in the PFSM, sets the error-flag , and pulls the nINT pin low. See Summary of Interrupt Signals for the interrupt handling of WD_RTS.

The WD_FAIL_CNT[3:0] counter responds as follows:

- When the Watchdog is in the Long-Window, the WD_FAIL_CNT[3:0] is cleared to 4’b0000
- A good event decrements the WD_FAIL_CNT[3:0] by one before the start of the next Window-1
- A bad event increments the WD_FAIL_CNT[3:0] by one before the start of the next Window-1

Copyright © 2022 Texas Instruments Incorporated

Refer to Watchdog Trigger Mode and Watchdog Q&A Related Definitions respectively for definitions of good events and bad events.

7.3.8.2 Watchdog Start-Up and Configuration

When the device releases the nRSTOUT pin, the watchdog starts with the Long Window. This Long Window has a time interval (t_{LONG_WINDOW}) with a default value set in bits WD_LONGWIN[7:0].

As long as the watchdog is in the Long Window, the MCU can configure the watchdog through the following register bits:

- WD_EN to enable or disable the watchdog
- WD_LONGWIN[7:0] to increase the duration of the Long-Window time-interval
- WD_MODE_SELECT to select the Watchdog mode (Trigger mode or Q&A Mode)
- WD_PWRHOLD to activate the Watchdog Disable function (more detail in セクション 7.3.8.4)
- WD_RETURN_LONGWIN to configure whether to return to Long-Window or continue to the next sequence after the completion of the current watchdog sequence (more detail in セクション 7.3.8.4)
- WD_WIN1[6:0] to configure the duration of the Window-1 time-interval
- WD_WIN2[6:0] to configure the duration of the Window-2 time-interval
- WD_RST_EN to enable or disable the watchdog-reset function
- WD_FAIL_TH[2:0] to configure the Watchdog-Fail threshold
- WD_RST_TH[2:0] to configure the Watchdog-Reset threshold
- WD_QA_FDBK[1:0] to configure the settings for the reference answer-generation
- WD_QA_LFSR[1:0] to configure the settings for the question-generation
- WD_QUESTION_SEED[3:0] to configure the starting-point for the 1st question-generation

The device keeps the above register bit values configured by the MCU as long as the device is powered.

The MCU can configure the time interval of the Long Window (t_{LONG_WINDOW}) with the WD_LONGWIN[7:0] bits. The WD_LONGWIN[7:0] bits are defined as:

- 0x00: 80 ms
- 0x01 - 0x40: 125 ms to 8 sec, in 125-ms steps
- 0x41 - 0xFF: 12 sec to 772 sec, in 4-sec steps

Use 式 5 and 式 6 to calculate the minimum and maximum values for the Long Window (t_{LONG_WINDOW}) time interval when WD_LONGWIN[7:0] > 0x00:

$$t_{LONG_WINDOW_MIN} = WD_LONGWIN[7:0] \times 0.95 \quad (5)$$

$$t_{LONG_WINDOW_MAX} = WD_LONGWIN[7:0] \times 1.05 \quad (6)$$

When the MCU clears bit WD_EN, the watchdog goes out of the Long Window and disables the watchdog. When the watchdog is disabled in this way, the MCU can set bit WD_EN back to ‘1’ to enable the watchdog again, and the MCU can control the ENABLE_DRV bit when no other error-flags are set. The MCU must clear bit WD_PWRHOLD before setting bit WD_EN back to ‘1’ to start the watchdog in Long Window.

The watchdog locks the following configuration register bits when it goes out of the Long Window and starts the first watchdog sequence:

- WD_WIN1[6:0]
- WD_WIN2[6:0]
- WD_LONGWIN[7:0]
- WD_MODE_SELECT
- WD_QA_FDBK[1:0], WD_QA_LFSR[1:0] and WD_QUESTION_SEED[3:0]
- WD_RST_EN, WD_EN, WD_FAIL_TH[2:0] and WD_RST_TH[2:0]

7.3.8.3 MCU to Watchdog Synchronization

In order to go out of the Long Window and start the first watchdog sequence, the MCU must do the following before elapse of the Long Window time interval:

- Clear bits WD_PWRHOLD (more detail in セクション 7.3.8.4)

- Apply a pulse signal with a minimum pulse-width t_{WD_pulse} on the pre-assigned GPIO pin in the case the watchdog is configured for Trigger mode, or
- Write four times to WD_ANSWER[7:0] in the case the watchdog is configured for Q&A mode

When the MCU fails to get the watchdog out of the Long Window before the configured Long Window time interval (t_{LONG_WINDOW}) elapses, the device goes through a warm reset, and sets the . This bit latched until the MCU writes a '1' to clear it.

7.3.8.4 Watchdog Disable Function

In case the MCU needs to be reprogrammed while the watchdog monitors the correct operation of the MCU, the MCU can set bit WD_RETURN_LONGWIN to put the watchdog back in the Long Window. When the MCU set this bit, the watchdog returns to the Long Window after the current Watchdog Sequence completes. In order to make the watchdog stay in the Long Window as long as needed the MCU can either re-configure the Long Window (t_{LONG_WINDOW}) time interval, or set the WD_PWRHOLD bit. Once the MCU starts the first watchdog sequence (as described in セクション 7.3.8.3), the MCU must clear bit WD_RETURN_LONGWIN before the end of the first watchdog sequence in order to continue the watchdog sequence operation.

7.3.8.5 Watchdog Sequence

Once the watchdog is out of the Long Window, each watchdog sequence starts with a Window-1 followed by a Window-2. The watchdog ends the current sequence and after one 20-MHz system clock cycle starts a next sequence when one of the events below occurs:

- The configured Window-2 time period elapses
- The watchdog detects a pulse signal with a minimum pulse-width t_{WD_pulse} on the pre-assigned GPIO pin if the watchdog is used in Trigger mode
- The watchdog detects four times a write access to WD_ANSWER[7:0] in case the watchdog is used in Q&A mode

The MCU can configure the time periods of the Window-1 ($t_{WINDOW1}$) and Window-2 ($t_{WINDOW2}$) with the bits WD_WIN1[6:0] and WD_WIN2[6:0] respectively, before starting the sequence.

Use 式 7 and 式 8 to calculate the minimum and maximum values for the $t_{WINDOW1}$ time interval.

$$t_{WINDOW1_MIN} = (WD_WIN1[6:0] + 1) \times 0.55 \times 0.95 \text{ ms} \quad (7)$$

$$t_{WINDOW1_MAX} = (WD_WIN1[6:0] + 1) \times 0.55 \times 1.05 \text{ ms} \quad (8)$$

Use 式 9 and 式 10 to calculate the minimum and maximum values for the $t_{WINDOW\text{-}2}$ time interval.

$$t_{WINDOW2_MIN} = (WD_WIN2[6:0] + 1) \times 0.55 \times 0.95 \text{ ms} \quad (9)$$

$$t_{WINDOW2_MAX} = (WD_WIN2[6:0] + 1) \times 0.55 \times 1.05 \text{ ms} \quad (10)$$

Copyright © 2022 Texas Instruments Incorporated

7.3.8.6 Watchdog Trigger Mode

When the LP876242-Q1 device is configured to use the Watchdog Trigger Mode, the watchdog receives the watchdog-triggers from the MCU on the pre-assigned GPIO pin . A rising edge on this , followed by a stable logic-high level on that pin for more than the maximum pulse time, $t_{WD_pulse(max)}$, is a watchdog-trigger. The watchdog uses a deglitch filter with a t_{WD_pulse} filter time and the internal 20-MHz system clock to create the internally-generated trigger pulse from the watchdog-trigger on the pre-assigned GPIO pin .

The watchdog detects a *good event* when the watchdog-trigger comes in Window-2. The rising edge of the watchdog-trigger on the pre-assigned GPIO pin must occur for at least the t_{WD_pulse} time before the end of Window-2 to generate such a good event.

The watchdog detects a *bad event* when one of the following events occurs:

- The watchdog-trigger comes in Window-1. The rising edge of the watchdog-trigger on the pre-assigned GPIO pin must occur for at least the t_{WD_pulse} time before the end of Window-1 to generate such a bad event. In case of this bad event, the device sets bits WD_TRIG_EARLY and WD_BAD_EVENT.
- No watchdog-trigger comes in Window-2. In case of this bad event (also referred to as time-out event), the device sets bits WD_TIMEOUT and WD_BAD_EVENT.

Please consider that the minimum WD-pulse duration needs to meet the maximum deglitch time $t_{WD_pulse\ (max)}$.

The status bit WD_BAD_EVENT is read-only. The watchdog clears the WD_BAD_EVENT status bit at the end of the watchdog-sequence.

WatchDog Flow Chart and Timing Diagrams in Trigger Mode shows the flow-chart of the watchdog in Trigger mode.

7.3.8.7 WatchDog Flow Chart and Timing Diagrams in Trigger Mode

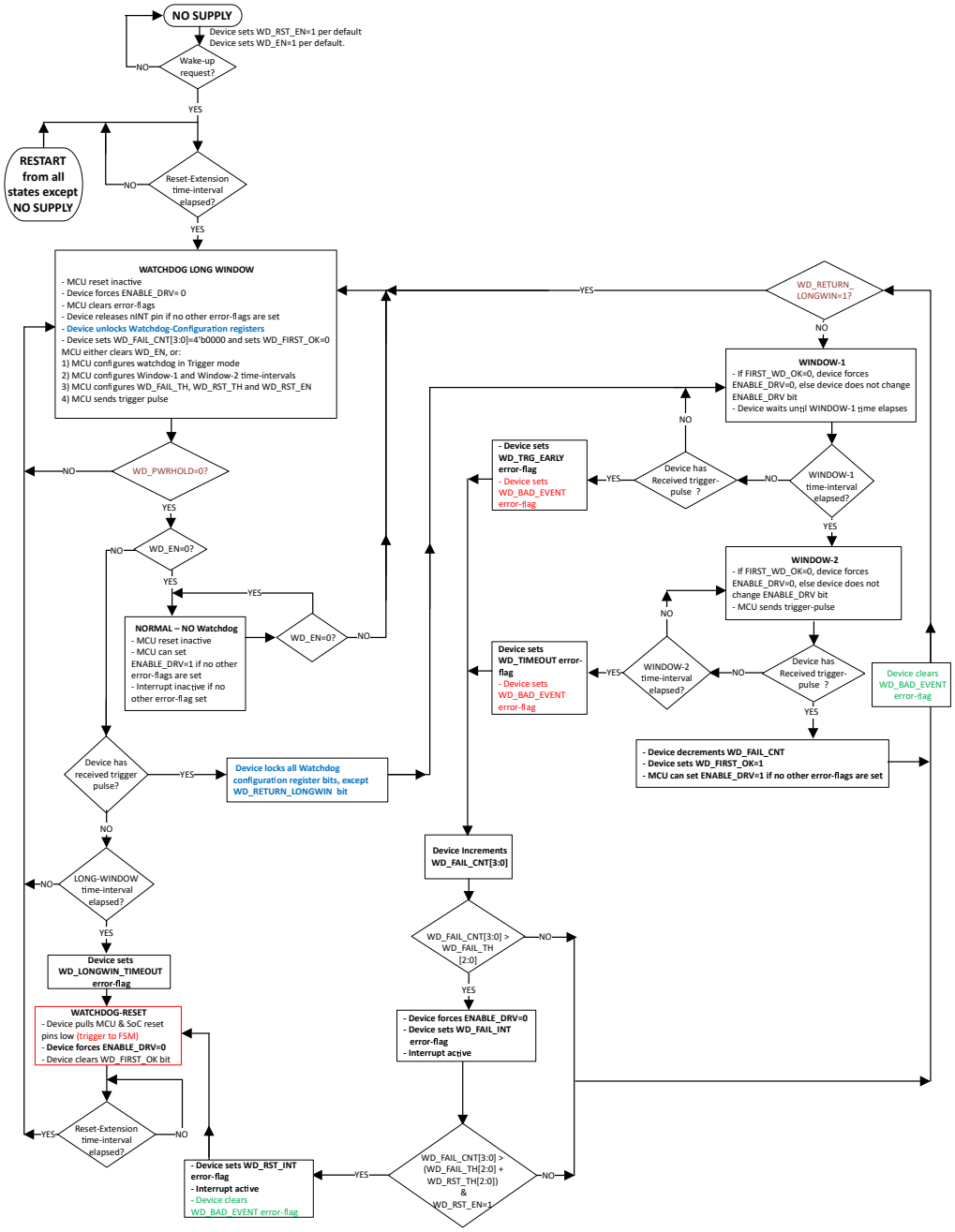

図 7-14. Flow Chart for WatchDog Monitor in Trigger Mode

図 7-15, 図 7-16, 図 7-17, 図 7-18, and 図 7-19 give examples of watchdog is trigger mode with good and bad events after device start-up. In these figures, the red bended arrows indicate a delay of one 20-MHz system clock cycle.

Copyright © 2022 Texas Instruments Incorporated

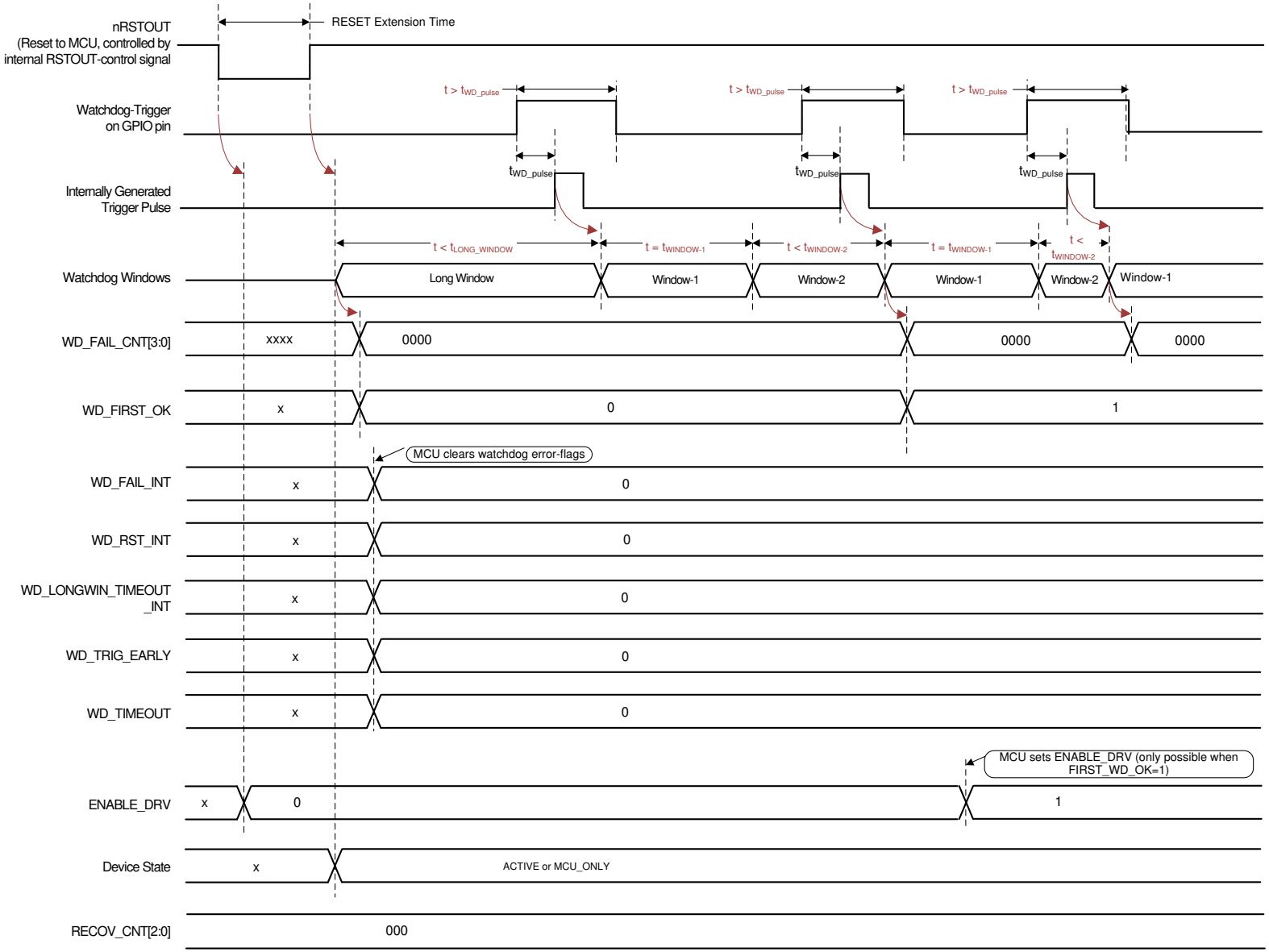

図 7-15. Watchdog in Trigger Mode – Normal MCU Start-up with Correct Watchdog-Triggers

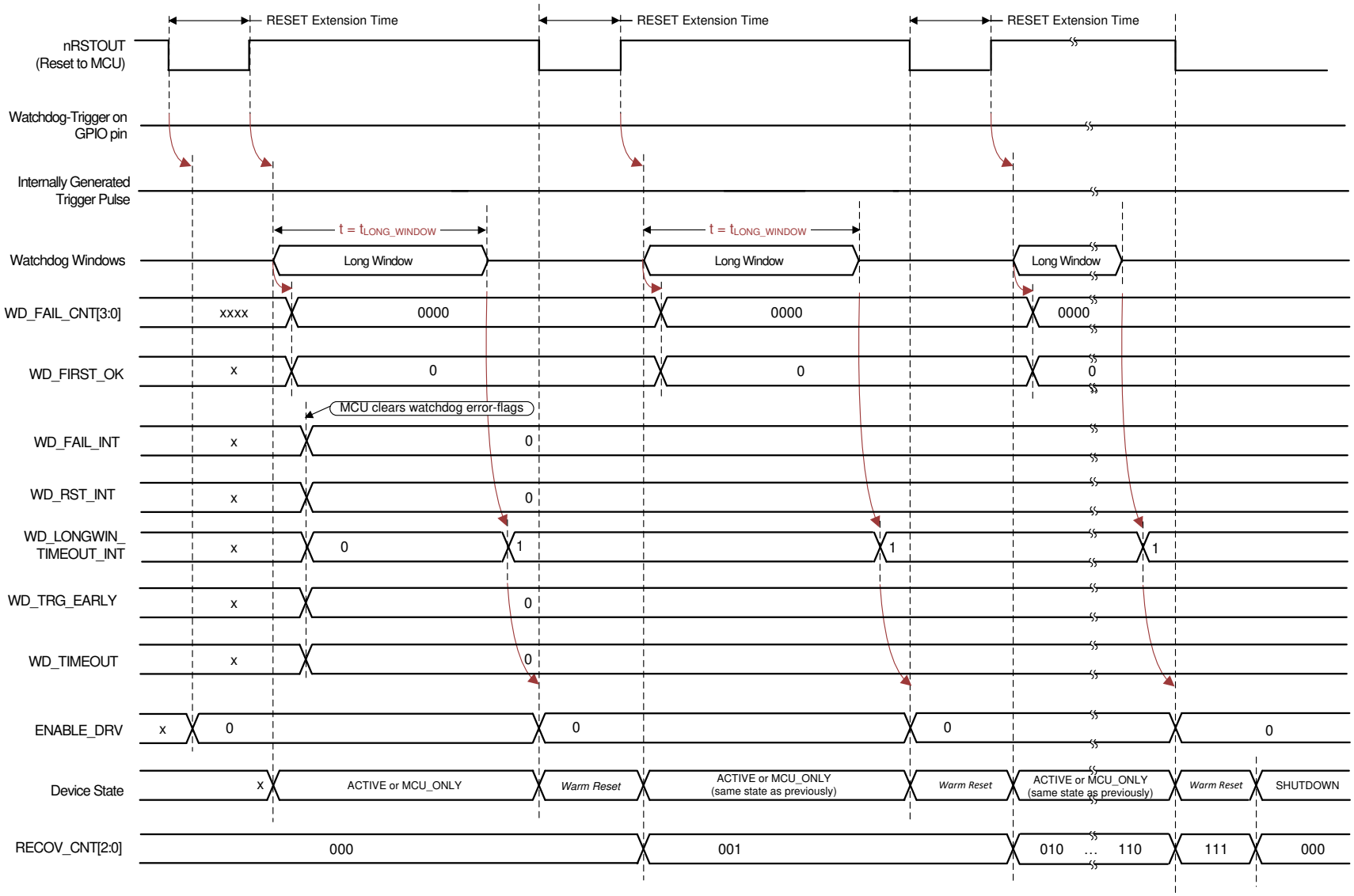

図 7-16. Watchdog in Trigger Mode – MCU Does Not Send Watchdog-Triggers After Start-up

Copyright © 2022 Texas Instruments Incorporated

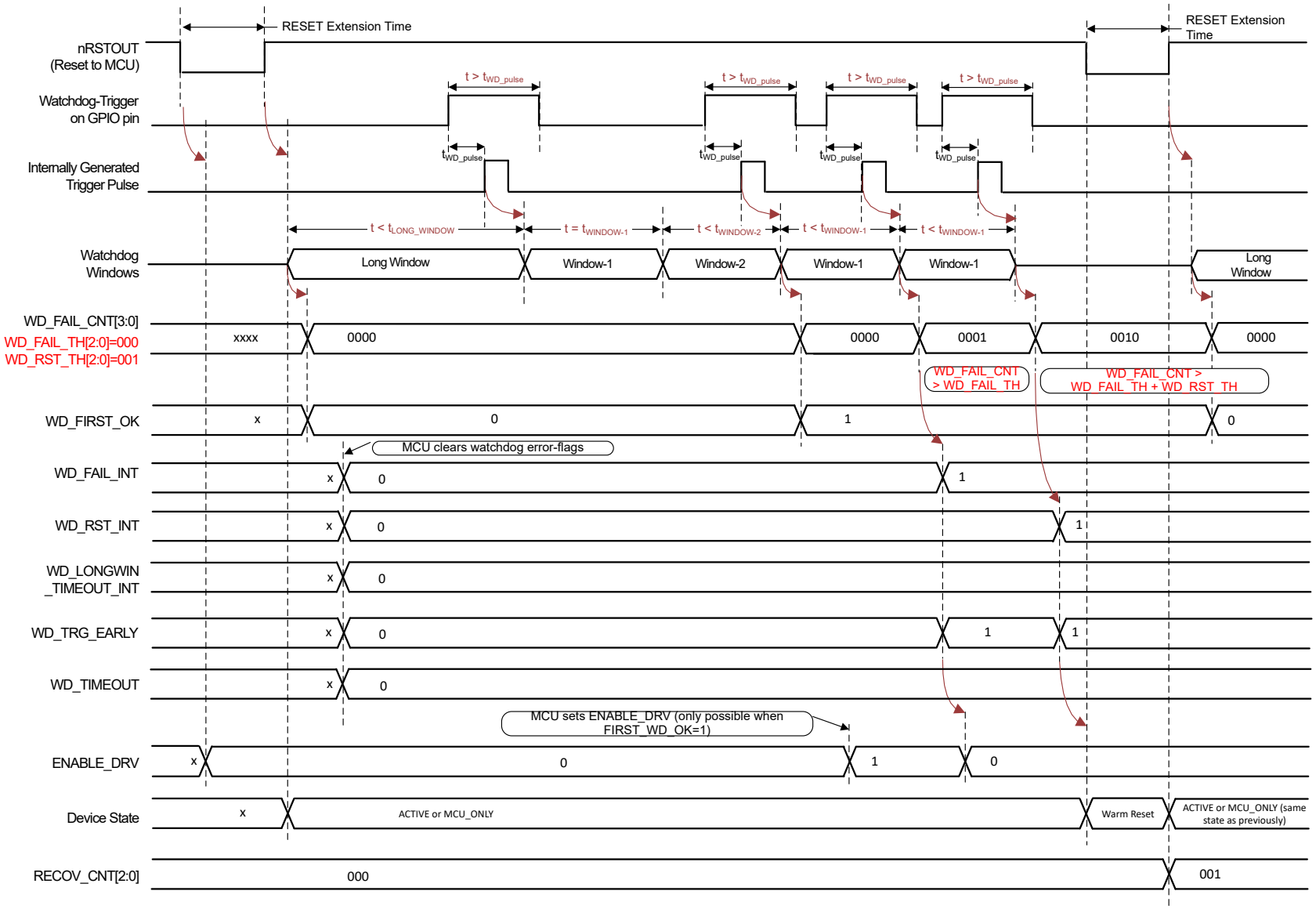

図 7-17. Watchdog in Trigger Mode – Bad Event (Watchdog-Triggers in Window-1) After Start-up

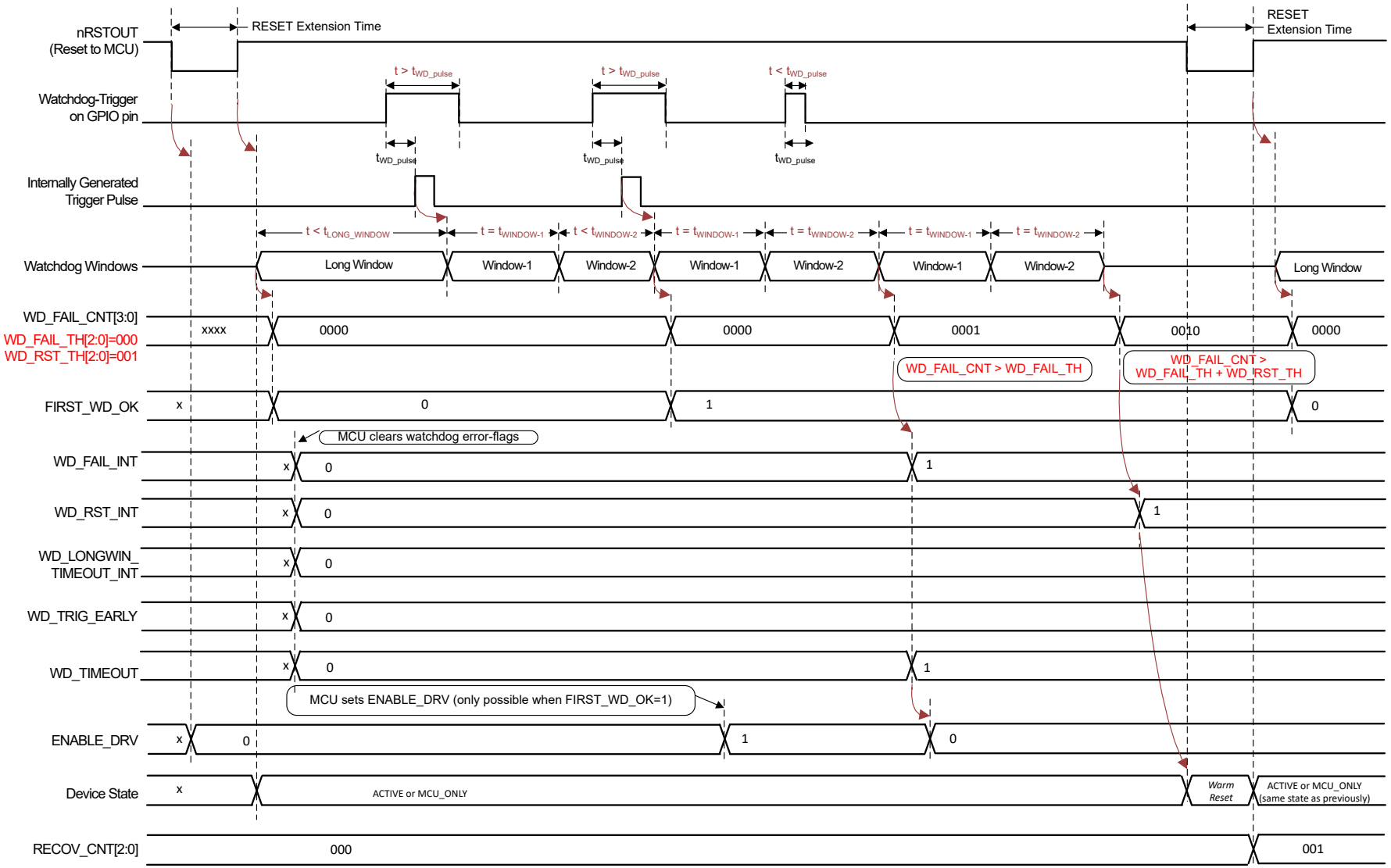

図 7-18. Watchdog in Trigger Mode – Bad Events (Too Short or no Trigger in Window-2) After Start-up

Copyright © 2022 Texas Instruments Incorporated

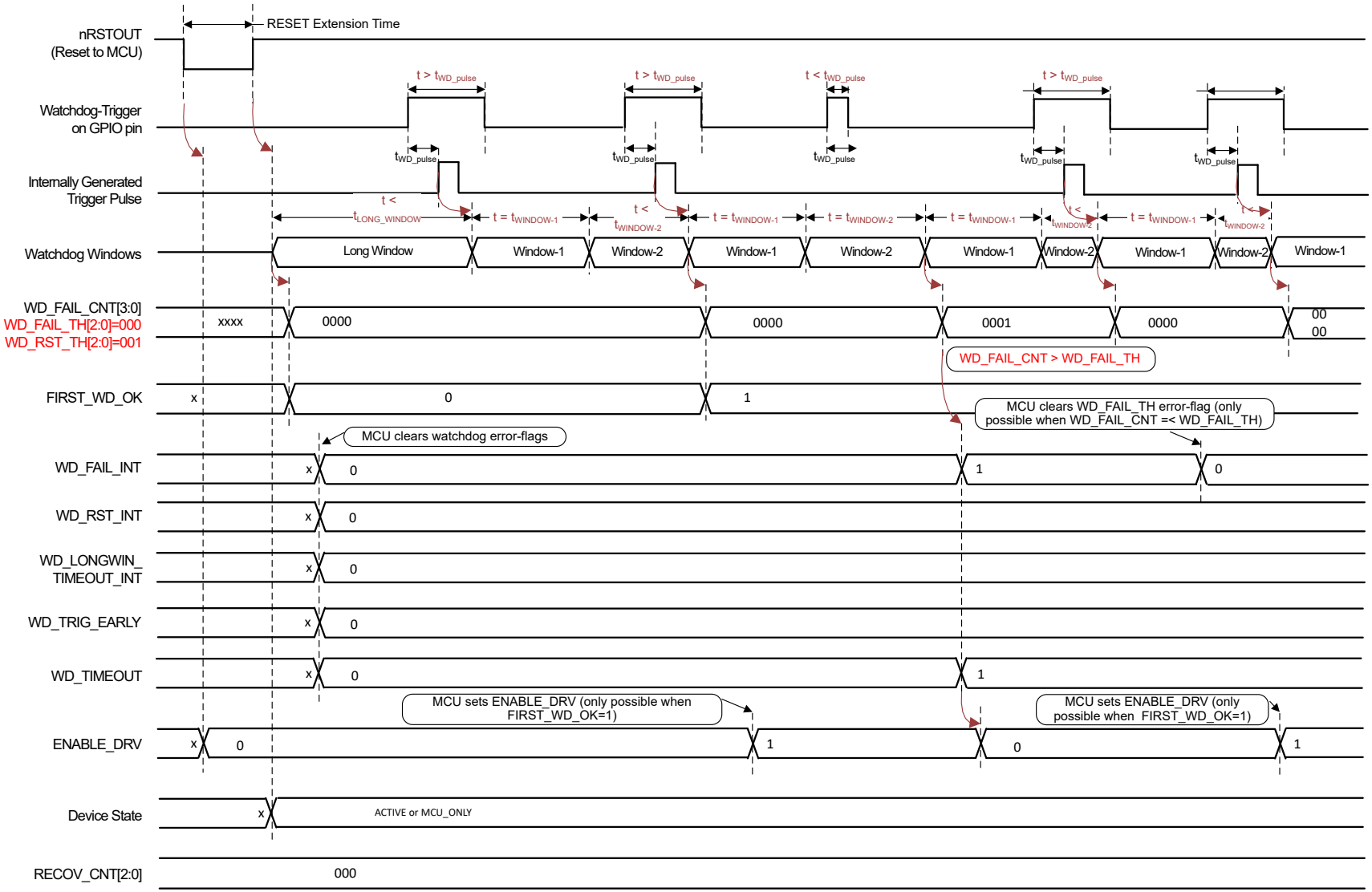

図 7-19. Watchdog in Trigger Mode – Good Events (Correct Watchdog-Triggers) After Start-up, Followed by a Bad-Event (No Watchdog-Trigger in Window-2) and After That Followed by a Good Event.

7.3.8.8 Watchdog Question-Answer Mode

When the LP876242-Q1 device is configured to use the Watchdog Question Answer mode, the watchdog requires specific messages from the MCU in specific time intervals to detect correct operation of the MCU.

The device provides a question for the MCU in WD_QUESTION[3:0] during operation. The MCU performs a fixed series of arithmetic operations on this question to calculate the required 32-bit answer. This answer is split into four answer bytes: Answer-3, Answer-2, Answer-1, and Answer-0. The MCU writes these answer bytes one byte at a time into WD_ANSWER[7:0] from the SPI or the dedicated I^2C2 interface, mapped to GPIO2 and GPIO3 pins.

A good event occurs when the MCU sends the correct answer-bytes calculated for the current question in the correct watchdog window and in the correct sequence.

A bad event occurs when one of the events that follows occur:

- The MCU sends the correct answer-bytes, but not in the correct watchdog window.
- The MCU sends incorrect answer-bytes.
- The MCU returns correct answer-bytes, but in the incorrect sequence.

If the MCU stops providing answer-bytes for the duration of the watchdog time-period, the watchdog detects a time-out event. This time-out event sets the WD_TIMEOUT status bit, increments the WD_FAIL_CNT[3:0] counter, and starts a new watchdog sequence.

7.3.8.8.1 Watchdog Q&A Related Definitions

A question and answer are defined as follows:

Question A question is a 4-bit word (see セクション 7.3.8.8.2).

The watchdog provides the question to the MCU when the MCU reads the WD_QUESTION[3:0] bits.

The MCU can request each new question at the start of the watchdog sequence, but this is not required to calculate the answer. The MCU can also have a software implementation that generates the question according the circuit shown in 図 7-22. Nevertheless, the answer and therefore the answer-bytes are always based on the question generated inside the watchdog of the device. So, if the MCU generates an incorrect question and gives answer-bytes calculated from this incorrect question, the watchdog detects a bad event

Answer An answer is a 32-bit word that is split into four answer bytes: Answer-3, Answer-2, Answer-1, and Answer-0.

The watchdog receives an answer-byte when the MCU writes to the WD_ANSWER[7:0] bits. For each question, the watchdog requires four correct answer-bytes from the MCU in the correct timing and order (Answer-3, Answer-2, and Answer-1 in Window 1 in the correct sequence, and Answer-0 in Window 2) to detect a good event.

The watchdog sequence in Q&A mode ends after the MCU writes the fourth answer byte (Answer-0), or after a time-out event when the Window-2 time-interval elapses.

Copyright © 2022 Texas Instruments Incorporated

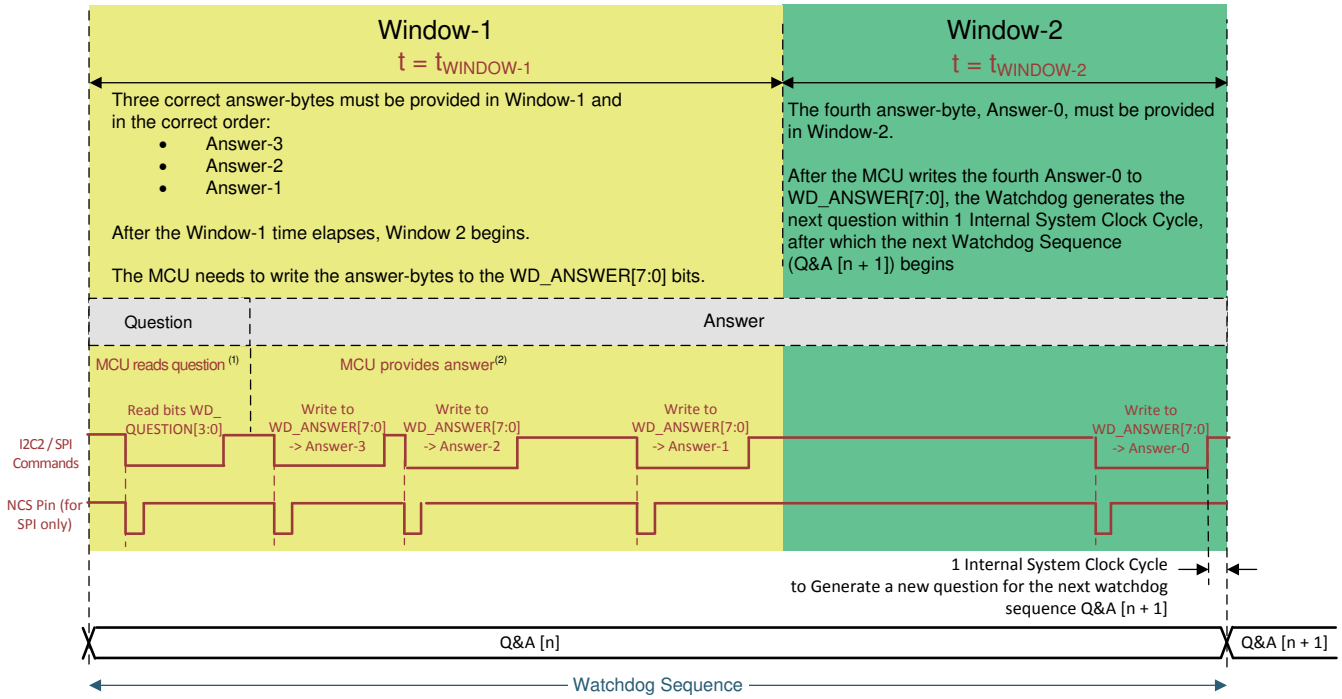

The register WD_QUESTION_ANSW_CNT has following bits:

- Bit 6: Reserved
- Bit 5-4: WD_ANSW_CNT. These bits give the number for the next expected answer-byte
- Bit 3-0: WD_QUESTION. These bits give the value of the current generated question

(1) For the question generation, the MCU is not required to read the question. The MCU can give correct answer-bytes Answer-3, Answer-2, Answer-1 as soon as Window-1 starts. The next watchdog sequence always starts in 1 system clock cycle after the watchdog receives the final Answer-0.

(2) The MCU can put other I^2C or SPI commands in-between the write-commands to WD_ANSWER[7:0] (even re-requesting the question). The insertion of other commands in-between the write-commands to WD_ANSWER[7:0] has no influence on the detection of a good event, as long as the three correct answer-bytes in Window-1 are in the correct sequence, and the fourth correct answer-byte is provided before the configured Window-2 time-interval elapses.

図 7-20. Watchdog Sequence in Q&A Mode

7.3.8.8.2 Question Generation

The watchdog uses a 4-bit *question counter* (QST_CNT[3:0] bits in 図 7-21), and a 4-bit Markov chain to generate a 4-bit question. The MCU can read this question in the WD_QUESTION[3:0] bits. The watchdog generates a new question when the question counter increments, which only occurs when the watchdog detects a good event. The watchdog does not generate a new question when it detects a bad event or a time-out event.

The question-counter provides a clock pulse to the Markov chain when it transitions from 4’b1111 to 4’b0000. The question counter and the Markov chain are set to the default value of 4’b0000 when the watchdog goes out of the Long Window.

図 7-21 shows the logic combination for the WD_QUESTION[3:0] generation.

図 7-22 shows how the logic combination of the question-counter with the WD_ANSW_CNT[1:0] status bits generates the reference answer-bytes.

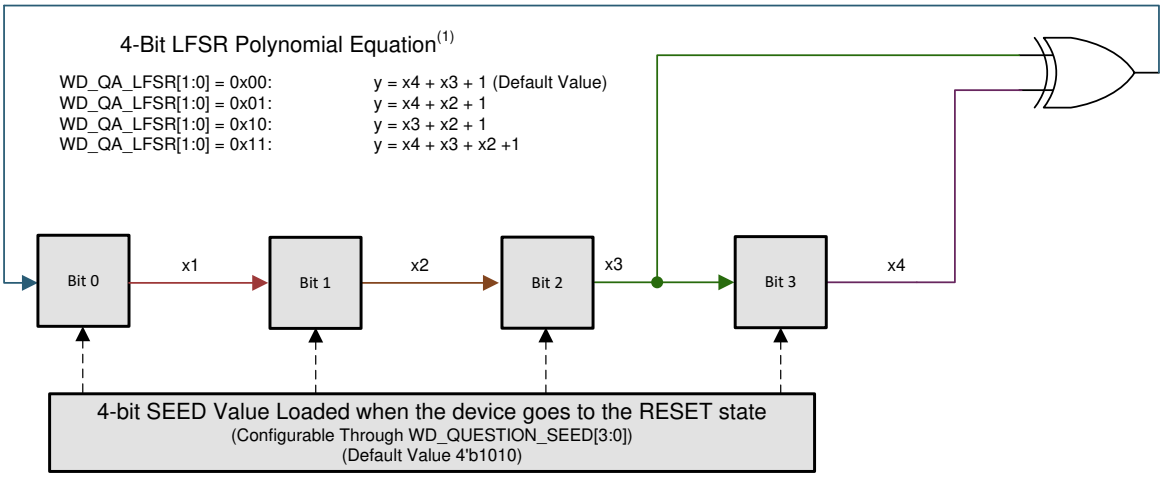

	x1	x2	x3	x4
SEED	**1**	**0**	**1**	**0**
1	1	1	0	1
2	1	1	1	0
3	1	1	1	1
4	0	1	1	1
5	0	0	1	1
6	0	0	0	1
7	1	0	0	0
8	0	1	0	0
9	0	0	1	0
10	1	0	0	1
11	1	1	0	0
12	0	1	1	0
13	1	0	1	1
14	0	1	0	1
15	1	0	1	0

The default question-sequence order with the default WD_QUESTION_SEED[3:0] and WD_QA_LFSR[1:0] values

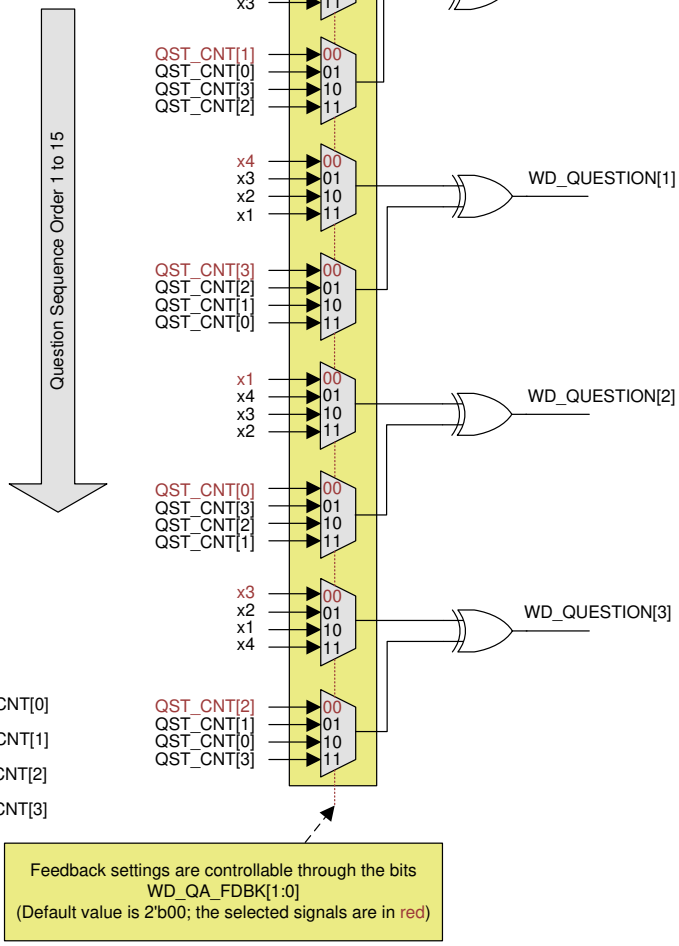

(1) If the current value for bits (x1, x2, x3, x4) is 4'b0000, the next value for these bits (x1, x2, x3, x4) is 4'b0001, and all further question generation begins from this value.

図 7-21. Watchdog Question Generation

Copyright © 2022 Texas Instruments Incorporated

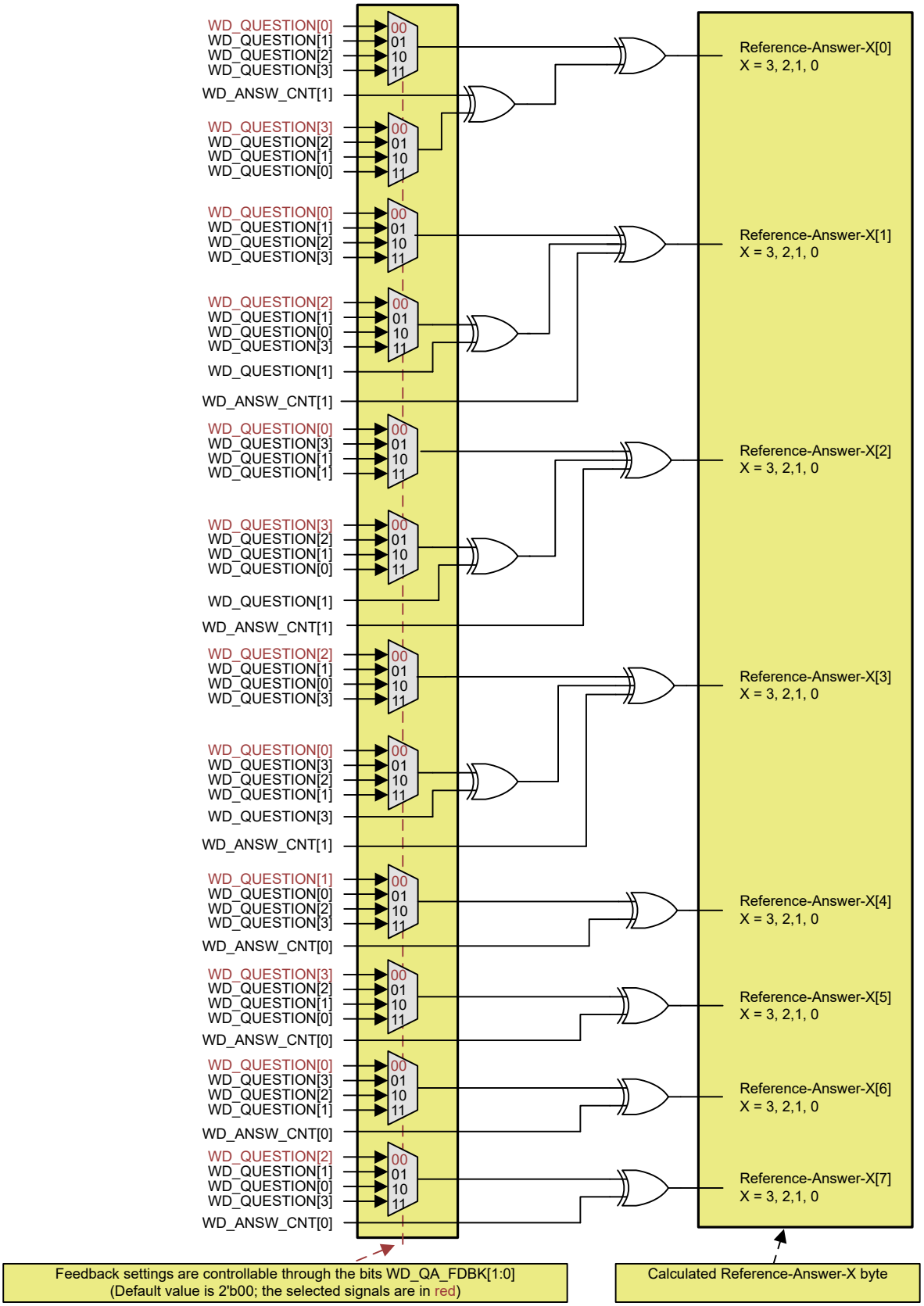

図 7-22. Watchdog Reference Answer Calculation

7.3.8.8.3 Answer Comparison

The 2-bit, watchdog-answer counter, WD_ANSW_CNT[1:0], counts the number of received answer-bytes and controls the generation of the reference answer-byte as shown in 図 7-22. At the start of each watchdog sequence, the default value of the WD_ANSW_CNT[1:0] counter is 2'b11 to indicate that the watchdog expects the MCU to write the correct Answer-3 in WD_ANSWER[7:0].

The device sets the WD_ANSW_ERR status bit as soon as one answer byte is not correct. The device clears this status bit only if the MCU writes a '1' to this bit.

7.3.8.8.3.1 Sequence of the 2-bit Watchdog Answer Counter

The sequence of the 2-bit, watchdog answer-counter is as follows for each counter value:

- WD_ANSW_CNT[1:0] = 2'b11:
  1. The watchdog calculates the reference Answer-3.
  2. A write access occurs. The MCU writes the Answer-3 byte in WD_ANSWER[7:0].
  3. The watchdog compares the reference Answer-3 with the Answer-3 byte in WD_ANSWER[7:0].
  4. The watchdog decrements the WD_ANSW_CNT[1:0] bits to 2b'10 and sets the WD_ANSW_ERR status bit to 1 if the Answer-3 byte was incorrect.

Copyright © 2022 Texas Instruments Incorporated

- WD_ANSW_CNT[1:0] = 2b‘10:
  1. The watchdog calculates the reference Answer-2.
  2. A write access occurs. The MCU writes the Answer-2 byte in WD_ANSWER[7:0].
  3. The watchdog compares the reference Answer-2 with the Answer-2 byte in WD_ANSWER[7:0]..
  4. The watchdog decrements the WD_ANSW_CNT[1:0] bits to 2b‘01 and sets the WD_ANSW_ERR status bit to 1 if the Answer-2 byte was incorrect.
- WD_ANSW_CNT[1:0] = 2b‘01:
  1. The watchdog calculates the reference Answer-1.
  2. A write access occurs. The MCU writes the Answer-1 byte in WD_ANSWER[7:0].
  3. The watchdog compares the reference Answer-1 with the Answer-1 byte in WD_ANSWER[7:0]..
  4. The watchdog decrements the WD_ANSW_CNT[1:0] bits to 2b‘00 and sets the WD_ANSW_ERR status bit to 1 if the Answer-1 byte was incorrect.
- WD_ANSW_CNT[1:0] = 2b‘00:
  1. The watchdog calculates the reference Answer-0.
  2. A write access occurs. The MCU writes the Answer-0 byte in WD_ANSWER[7:0].
  3. The watchdog compares the reference Answer-0 with the Answer-0 byte in WD_ANSWER[7:0].
  4. The watchdog sets the WD_ANSW_ERR status bit to 1 if the Answer-0 byte was incorrect.
  5. The watchdog starts a new watchdog sequence and sets the WD_ANSW_CNT[1:0] to 2‘b11’.

  The MCU needs to clear the bit by writing a '1' to the WD_ANSW_ERR bit.

表 7-5. Set of Questions and Corresponding Answer-Bytes Using the Default Setting of WD_QA_CFG Register

WD QUESTION	ANSWER-BYTES (EACH BYTE TO BE WRITTEN INTO WD_ANSWER[7:0])			
	ANSWER-3	ANSWER-2	ANSWER-1	ANSWER-0
WD_QUESTION[3:0]	WD_ANSW_CNT [1:0] = 2’b11	WD_ANSW_CNT [1:0] = 2’b10	WD_ANSW_CNT [1:0] = 2’b01	WD_ANSW_CNT [1:0] = 2’b00
0x0	FF	0F	F0	00
0x1	B0	40	BF	4F
0x2	E9	19	E6	16
0x3	A6	56	A9	59
0x4	75	85	7A	8A
0x5	3A	CA	35	C5
0x6	63	93	6C	9C
0x7	2C	DC	23	D3
0x8	D2	22	DD	2D
0x9	9D	6D	92	62
0xA	C4	34	CB	3B
0xB	8B	7B	84	74
0xC	58	A8	57	A7
0xD	17	E7	18	E8
0xE	4E	BE	41	B1
0xF	01	F1	0E	FE

7.3.8.8.3.2 Watchdog Sequence Events and Status Updates

The watchdog sequence events are as follows for the different scenarios listed:

- A good event occurs when all answer bytes are correct in value and timing. After such a good event, following events occur:
  1. The WD_FAIL_CNT[2:0] counter decrements by one at the end of the watchdog-sequence.
  2. The question-counter increments by one and the watchdog generates a new question.
- A bad event occurs when all answer-bytes are correct in value but not in correct timing. After such a bad event, following events occur:

1. The WD_SEQ_ERR and WD_BAD_EVENT status bits are set if Window-1 time-interval elapses before watchdog has received Answer-3, Answer-2 and Answer-1.
2. The WD_ANSW_EARLY and WD_BAD_EVENT status bits are set if watchdog receives all four answers in Window-1.
3. The WD_FAIL_CNT[2:0] counter increments by one at the end of the watchdog-sequence.
4. The question-counter does not change, and hence the watchdog does not generate a new question.

- A bad event occurs when one or more of the answer-bytes are not correct in value but in correct timing. After such a bad event, following events occur:
  1. The WD_ANSW_ERR and WD_BAD_EVENT status bits are set as soon as the watchdog detects an incorrect answer-byte.
  2. The WD_FAIL_CNT[2:0] counter increments by one at the end of the watchdog-sequence.
  3. The question-counter does not change, and hence the watchdog does not generate a new question.
- A bad event occurs when one or more of the answer-bytes are not correct in value and not in correct timing. After such a bad event, following events occur:
  1. The WD_ANSW_ERR and WD_BAD_EVENT status bits are set as soon as the watchdog detects an incorrect answer-byte.
  2. The WD_SEQ_ERR and WD_BAD_EVENT status bits are set if Window-1 time-interval elapses before watchdog has received Answer-3, Answer-2 and Answer-1.
  3. The WD_ANSW_EARLY and WD_BAD_EVENT status bits are set if watchdog receives all four answer-bytes in Window-1.
  4. The WD_FAIL_CNT[2:0] counter increments by one at the end of the watchdog-sequence.
  5. The question-counter does not change, and hence the watchdog does not generate a new question.
- A time-out event occurs when the device receives less than 4 answer-bytes before Window-2 time-interval elapses. After a time-out event occurs, following events occur:
  1. WD_SEQ_ERR and WD_BAD_EVENT status bits are set if Window-1 time-interval elapses before watchdog has received Answer-3, Answer-2 and Answer-1.
  2. The WD_TIMEOUT and WD_BAD_EVENT status bits are set at the end of the watchdog-sequence.
  3. The WD_FAIL_CNT[2:0] counter increments by one at the end of the watchdog-sequence.
  4. The question-counter does not change, and hence the watchdog does not generate a new question.

The status bit WD_BAD_EVENT is read-only. The watchdog clears the WD_BAD_EVENT status bit at the end of the watchdog-sequence.

The status bits WD_SEQ_ERR, WD_ANSW_EARLY, and WD_TIMEOUT are latched until the MCU writes a ‘1’ to these bits. If one or more of these status bits are set, the watchdog can still detect a good event in the next watchdog-sequence. These status bits are read-only. The watchdog clears the WD_BAD_EVENT status bit at the end of the watchdog-sequence.

図 7-23 shows the flow-chart of the watchdog in Q&A mode.

Copyright © 2022 Texas Instruments Incorporated

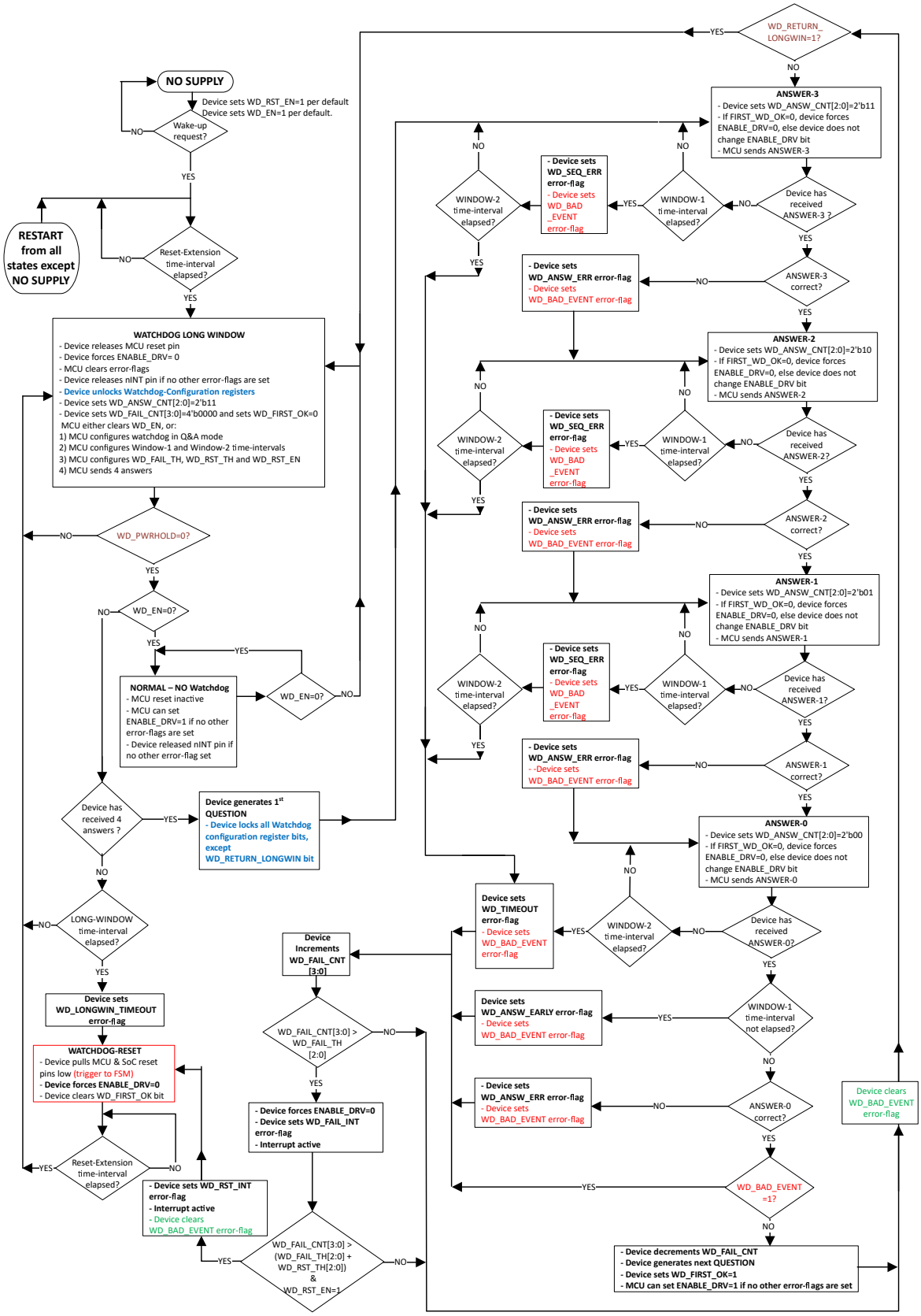

図 7-23. Flow Chart for WatchDog in Q&A Mode

7.3.8.8.3.3 Watchdog Q&A Sequence Scenarios

表 7-6. Correct and Incorrect WD Q&A Sequence Run Scenarios

NUMBER OF WD ANSWERS		ACTION	WD STATUS BITS IN WDT_STATUS REGISTER				COMMENTS
RESPONSE WINDOW 1	RESPONSE WINDOW 2		ANSW_ERR	ANSW_EARLY	SEQ_ERR	TIME_OUT	
0 answers	0 answers	-New WD cycle starts after the end of RESPONSE WINDOW 2 -Increment WD failure counter -New WD cycle starts with the same WD question	0b	0b	1b	1b	No answers
0 answers	4 INCORRECT answers	-New WD cycle starts after the 4th WD answer -Increment WD failure counter -New WD cycle starts with the same WD question	1b	0b	1b	0b	WD_ANSW_CNT[1:0] = 3
0 answers	4 CORRECT answers	-New WD cycle starts after the 4th WD answer -Increment WD failure counter -New WD cycle starts with the same WD question	0b	0b	1b	0b	WD_ANSW_CNT[1:0] = 3
0 answers	1 CORRECT answer	-New WD cycle starts after the end of RESPONSE WINDOW 2 -Increment WD failure counter -New WD cycle starts with the same WD question	0b	0b	1b	1b	Less than 3 CORRECT ANSWER in RESPONSE WINDOW 1 and 1 CORRECT ANSWER in RESPONSE WINDOW 2 (WD_ANSW_CNT[1:0] < 3)
1 CORRECT answer	1 CORRECT answer						
2 CORRECT answer	1 CORRECT answer						
0 answers	1 INCORRECT answer	-New WD cycle starts after the end of RESPONSE WINDOW 2 -Increment WD failure counter -New WD cycle starts with the same WD question	1b	0b	1b	1b	Less than 3 CORRECT ANSWER in RESPONSE WINDOW 1 and 1 INCORRECT ANSWER in RESPONSE WINDOW 2 (WD_ANSW_CNT[1:0] < 3)
1 CORRECT answer	1 INCORRECT answer						
2 CORRECT answers	1 INCORRECT answer						
0 answers	4 CORRECT answers	-New WD cycle starts after the 4th WD answer -Increment WD failure counter -New WD cycle starts with the same WD question	0b	0b	1b	0b	Less than 3 CORRECT ANSWER in WIN1 and more than 1 CORRECT ANSWER in RESPONSE WINDOW 2 (WD_ANSW_CNT[1:0] = 3)
1 CORRECT answer	3 CORRECT answers						
2 CORRECT answers	2 CORRECT answers						
0 answers	4 INCORRECT answers	-New WD cycle starts after the 4th WD answer -Increment WD failure counter -New WD cycle starts with the same WD question	1b	0b	1b	0b	Less than 3 CORRECT ANSWER in RESPONSE WINDOW 1 and more than 1 INCORRECT ANSWER in RESPONSE WINDOW 2 (WD_ANSW_CNT[1:0] = 3)
1 CORRECT answer	3 INCORRECT answers						
2 CORRECT answers	2 INCORRECT answers						
0 answers	3 CORRECT answers	-New WD cycle starts after the end of RESPONSE WINDOW 2 -Increment WD failure counter -New WD cycle starts with the same WD question	0b	0b	1b	1b	Less than 3 INCORRECT ANSWER in RESPONSE WINDOW 1 and more than 1 CORRECT ANSWER in RESPONSE WINDOW 2 (WD_ANSW_CNT[1:0] < 3)
1 INCORRECT answer	2 CORRECT answers	-New WD cycle starts after the end of RESPONSE WINDOW 2 -Increment WD failure counter -New WD cycle starts with the same WD question	1b	0b	1b	1b	
2 INCORRECT answers	1 CORRECT answer						
0 answers	3 INCORRECT answers	-New WD cycle starts after the end of RESPONSE WINDOW 2 -Increment WD failure counter -New WD cycle starts with the same WD question	1b	0b	1b	1b	Less than 3 INCORRECT ANSWER in RESPONSE WINDOW 1 and more than 1 INCORRECT ANSWER in RESPONSE WINDOW 2 (WD_ANSW_CNT[1:0] < 3)
1 INCORRECT answer	2 INCORRECT answer						
2 INCORRECT answer	1 INCORRECT answer						
0 answers	4 CORRECT answers	-New WD cycle starts after the 4th WD answer -Increment WD failure counter -New WD cycle starts with the same WD question	0b	0b	1b	0b	Less than 3 INCORRECT ANSWER in RESPONSE WINDOW 1 and more than 1 CORRECT ANSWER in RESPONSE WINDOW 2 (WD_ANSW_CNT[1:0] = 3)
1 INCORRECT answer	3 CORRECT answers		1b	0b	1b	0b	
2 INCORRECT answers	2 CORRECT answers						
0 answers	4 INCORRECT answers	-New WD cycle starts after the 4th WD answer -Increment WD failure counter -New WD cycle starts with the same WD question	1b	0b	1b	0b	Less than 3 INCORRECT ANSWER in RESPONSE WINDOW 1 and more than 1 INCORRECT ANSWER in RESPONSE WINDOW 2 (WD_ANSW_CNT[1:0] = 3)
1 INCORRECT answer	3 INCORRECT answers						
2 INCORRECT answers	2 INCORRECT answers						

Copyright © 2022 Texas Instruments Incorporated

表 7-6. Correct and Incorrect WD Q&A Sequence Run Scenarios (continued)

NUMBER OF WD ANSWERS		ACTION	WD STATUS BITS IN WDT_STATUS REGISTER				COMMENTS
RESPONSE WINDOW 1	RESPONSE WINDOW 2		ANSW_ERR	ANSW_EARLY	SEQ_ERR	TIME_OUT	
3 CORRECT answers	0 answers	-New WD cycle starts after the end of RESPONSE WINDOW 2 -Increment WD failure counter -New WD cycle starts with the same WD Question	0b	0b	0b	1b	Less than 4 CORRECT ANSW in RESPONSE WINDOW 1 and more than 0 ANSWER in RESPONSE WINDOW 2 (WD_ANSW_CNT[1:0] < 3)
2 CORRECT answers	0 answers		0b	0b	1b	1b	
1 CORRECT answers	0 answers						
3 CORRECT answers	1 CORRECT answer	-New WD cycle starts after the 4th WD answer -Decrement WD failure counter -New WD cycle starts with a new WD question	0b	0b	0b	0b	CORRECT SEQUENCE
3 CORRECT answers	1 INCORRECT answers	-New WD cycle starts after the 4th WD answer -Increment WD failure counter -New WD cycle starts with the same WD question	1b	0b	0b	0b	WD_ANSW_CNT[1:0] = 3
3 INCORRECT answers	0 answers	-New WD cycle starts after the end of RESPONSE WINDOW 2 -Increment WD failure counter -New WD cycle starts with the same WD question	1b	0b	0b	1b	WD_ANSW_CNT[1:0] < 3
3 INCORRECT answers	1 CORRECT answer	-New WD cycle starts after the 4th WD answer -Increment WD failure counter -New WD cycle starts with the same WD question	1b	0b	0b	0b	WD_ANSW_CNT[1:0] = 3
3 INCORRECT answers	1 INCORRECT answer	-New WD cycle starts after the 4th WD answer -Increment WD failure counter -New WD cycle starts with the same WD question	1b	0b	0b	0b	WD_ANSW_CNT[1:0] = 3
4 CORRECT answers	Not applicable	-New WD cycle starts after the 4th WD answer -Increment WD failure counter -New WD cycle starts with the same WD question	0b	1b	0b	0b	4 CORRECT or INCORRECT ANSWER in RESPONSE WINDOW 1
3 CORRECT answers + 1 INCORRECT answer	Not applicable	-New WD cycle starts after the 4th WD answer -Increment WD failure counter -New WD cycle starts with the same WD question	1b	1b	0b	0b	
2 CORRECT answers + 2 INCORRECT answers	Not applicable						
1 CORRECT answer + 3 INCORRECT answers	Not applicable						

7.3.9 Error Signal Monitor (ESM)

The LP876242-Q1 device has an error signal monitor (ESM), referred to as ESM_MCU throughout this document. This ESM_MCU monitors the MCU error output signal at the nERR_MCU input pin .

At device start-up, the ESM_MCU can be enabled or disabled through configuration bit ESM_MCU_EN. The value for this configuration bit is stored in the NVM memory of the device. To start the enabled ESM_MCU, the MCU sets the start bit ESM_MCU_START through software after the system is powered up and the initial software configuration is completed. If the MCU clears this start bit, the ESM_MCU stops monitoring its input pin. The MCU can set the ENABLE_DRV bit only when the MCU has either started or disabled the ESM_MCU. When the ESM_MCU is started, the following configuration registers are write protected and can only be read:

Configuration registers write-protected by the ESM_MCU_START register bit:

- ESM_MCU_DELAY1_REG
- ESM_MCU_DELAY2_REG
- ESM_MCU_MODE_CFG
- ESM_MCU_HMAX_REG
- ESM_MCU_HMIN_REG
- ESM_MCU_LMAX_REG
- ESM_MCU_LMIN_REG

The ESM_MCU uses a deglitch-filter with deglitch-time t_{degl_ESMx} to monitor its related input pin.

The MCU can configure the ESM_MCU in two different modes that are defined as follows:

Level Mode the ESM_MCU detects an ESM-error when the input pin remains low for a time equal to or longer than the deglitch-time t_{degl_ESMx}.

To select this mode for the ESM_MCU, the MCU must clear bit ESM_MCU_MODE. See セクション 7.3.9.2 for further detail

.

PWM Mode the ESM_MCU monitors a PWM signal at its input pin. The ESM_MCU detects a bad-event when the frequency or duty cycle of the PWM input signal deviates from the expected signal. The ESM_MCU detects a good-event when the frequency and duty cycle of the PWM signal match with the expected signal for one signal period.

The ESM_MCU has an error-counter (ESM_MCU_ERR_CNT[4:0]), which increments with +2 after each bad-event, and decrements with -1 after each good-event. The ESM_MCU detects an ESM-error when the error-counter value is more than its related threshold value.

To select this mode for the ESM_MCU, the MCU must set bit ESM_MCU_MODE. See セクション 7.3.9.3 for further details.

The MCU can configure the ESM_MCU as long as its related start bit is cleared to 0 (bit ESM_MCU_START). As soon as the MCU sets the start bit, the device sets a write-protection on the configuration registers of the ESM_MCU except the start bit ESM_MCU_START.

7.3.9.1 ESM Error-Handling Procedure

The ESM_MCU has two of its own configurable delay-timers that are reset when the device clears the ESM_MCU_START bit. Below steps describe the procedure through which the ESM_MCU goes in case it detects an ESM-error:

1. If the respective mask bit ESM_MCU_PIN_MASK=0, the device sets interrupt bit ESM_MCU_PIN_INT , and pulls the nINT pin low.
2. The ESM starts the delay-1 timer (configurable through related ESM_MCU_DELAY1[7:0] bits).
3. If the ESM-error is no longer present and MCU has cleared the interrupt bit ESM_MCU_PIN_INT before the delay-1 timer elapses, the device releases the nINTpin, the ESM resets the delay-1 and delay-2 timers and continues to monitor its input pin.

Copyright © 2022 Texas Instruments Incorporated

4. If the ESM-error is still present, or if MCU has not cleared the interrupt bit ESM_MCU_PIN_INT , and the delay-1 timer elapses, then the ESM clears the ENABLE_DRV bit if bit ESM_MCU_ENDRV=1.
5. If the delay-2 timer (configurable through related ESM_MCU_DELAY2[7:0] bits) is set to 0, then the ESM skips steps 6 of this list, and performs step 7.
6. If the delay-2 timer is not set to 0, then:
   a. ESM starts the delay-2 timer,
   b. If ESM_MCU_FAIL_MASK = 0, the device sets interrupt bit ESM_MCU_FAIL_INT and pulls the nINT pin low and starts the delay-2 timer.
7. If the ESM-error is no longer present and the MCU has cleared the related interrupt bits listed below before the delay-2 timer elapses, the device releases the nINTpin, the ESM resets the delay-1 and delay-2 timers and continues to monitor its input pin:
   - ESM_MCU_PIN_INT (and ESM_MCU_FAIL_INT if set in step 6)
8. If the ESM-error is still present, or if MCU has not cleared the interrupt bits ESM_MCU_PIN_INT and ESM_MCU_FAIL_INT , and the delay-2 timer elapses, then the device:
   a. clears the ESM_MCU_START BIT
   b. sets interrupt bit ESM_MCU_FAIL_INT and ESM_MCU_RST_INT, which the device handles as an ESM_MCU_RST trigger for FSM, described in Summary of Interrupt Signals
   c. After this trigger handling completes, the device re-initializes the ESM_MCU

ESM_MCU_DELAY1[7:0] set the delay-1 time-interval ($t_{DELAY-1}$) for the ESM_MCU . Use 式 11 and 式 12 to calculate the worst-case values for the $t_{DELAY-1}$:

$$\text{Min. } t_{DELAY-1} = (\text{ESM_MCU_DELAY1[7:0]} \times 2.048 \text{ ms}) \times 0.95 \quad (11)$$

$$\text{Max. } t_{DELAY-1} = (\text{ESM _MCU_DELAY1[7:0]} \times 2.048 \text{ ms}) \times 1.05 \quad (12)$$

ESM_MCU_DELAY2[7:0] bits set the delay-2 time-interval ($t_{DELAY-2}$) for the ESM_MCU . Use 式 13 and 式 14 to calculate the worst-case values for the $t_{DELAY-2}$:

$$\text{Min. } t_{DELAY-2} = (\text{ESM_MCU_DELAY2[7:0]} \times 2.048 \text{ ms}) \times 0.95 \quad (13)$$

$$\text{Max. } t_{DELAY-2} = (\text{ESM_MCU_DELAY2[7:0]} \times 2.048 \text{ ms}) \times 1.05 \quad (14)$$

7.3.9.2 Level Mode

In Level Mode, after MCU has set the start bit (bit ESM_MCU_START), the ESM_MCU monitors its nERR_MCU input pin. The ESM _MCU detects an ESM-error when the voltage level on its input pin remains low for a time equal or longer than the deglitch-time t_{degl_ESMx}. When the ESM_MCU detects an ESM-error, it starts the ESM Error-Handling procedure as described in セクション 7.3.9.1. The Error-Handling Procedure is stopped if, before elapse of the delay-1 or delay-2 interval, the voltage level on the input pin remains high for a time equal or longer than the deglitch-time t_{degl_ESMx} and the MCU clears all corresponding interrupt bits. If the ESM-error persists such that the configured delay-1 and delay-2 times elapse, the ESM_MCU sends a ESM_MCU_RST trigger to the PFSM and the device clear the ESM_MCU_START bit. After the PFSM completes the handling of the ESM_MCU_RST trigger, the device re-initializes the ESM_MCU.

For a complete overview on how the ESM_MCU works in Level Mode, please refer to the flow-chart in 図 7-24. In this flow-chart, the _x stands for _MCU. 図 7-25, 図 7-26, 図 7-27, and 図 7-28 show example wave forms for several error-cases for the ESM_MCU in Level Mode.

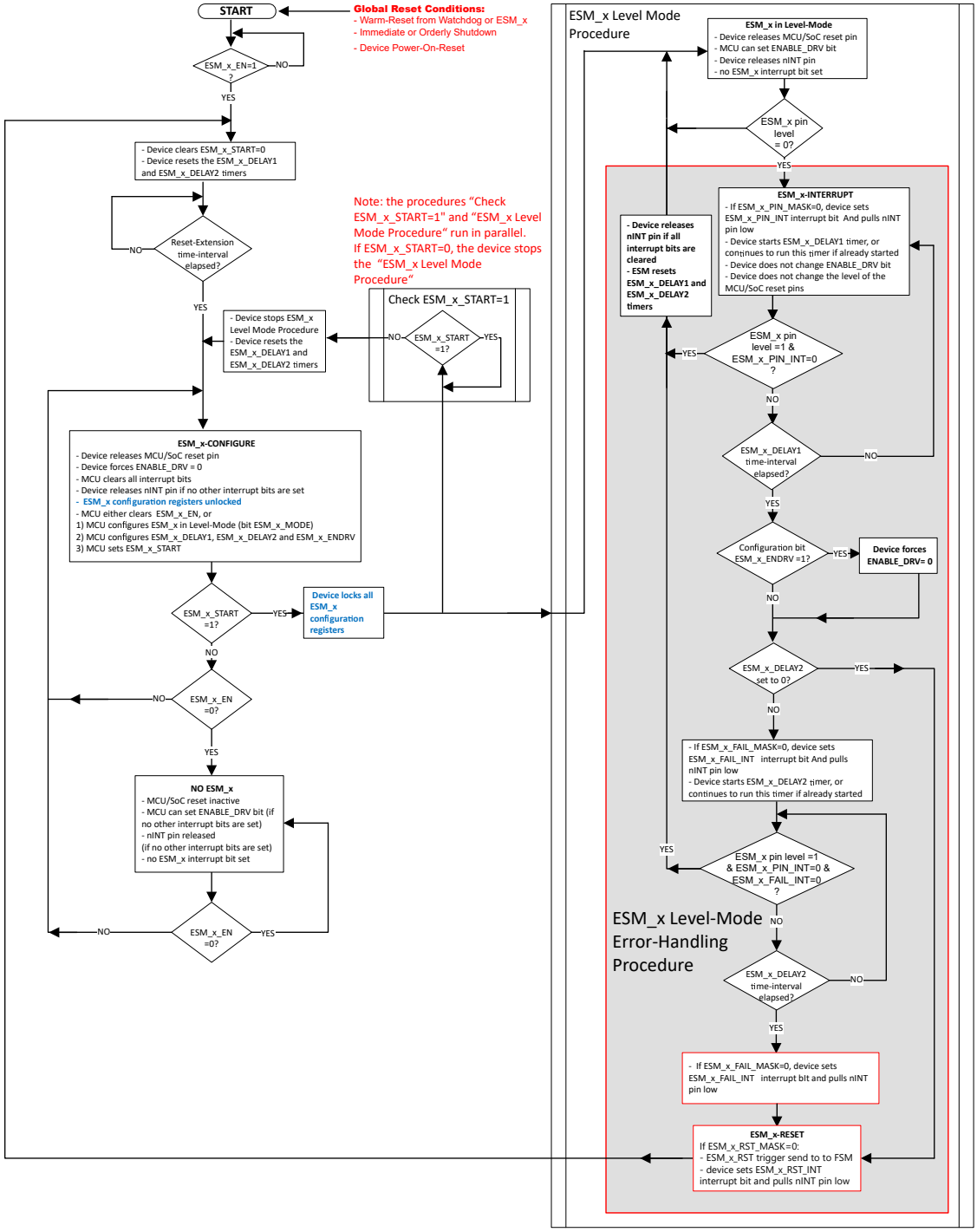

図 7-24. Flow Chart for Error Detection in Level Mode

Copyright © 2022 Texas Instruments Incorporated

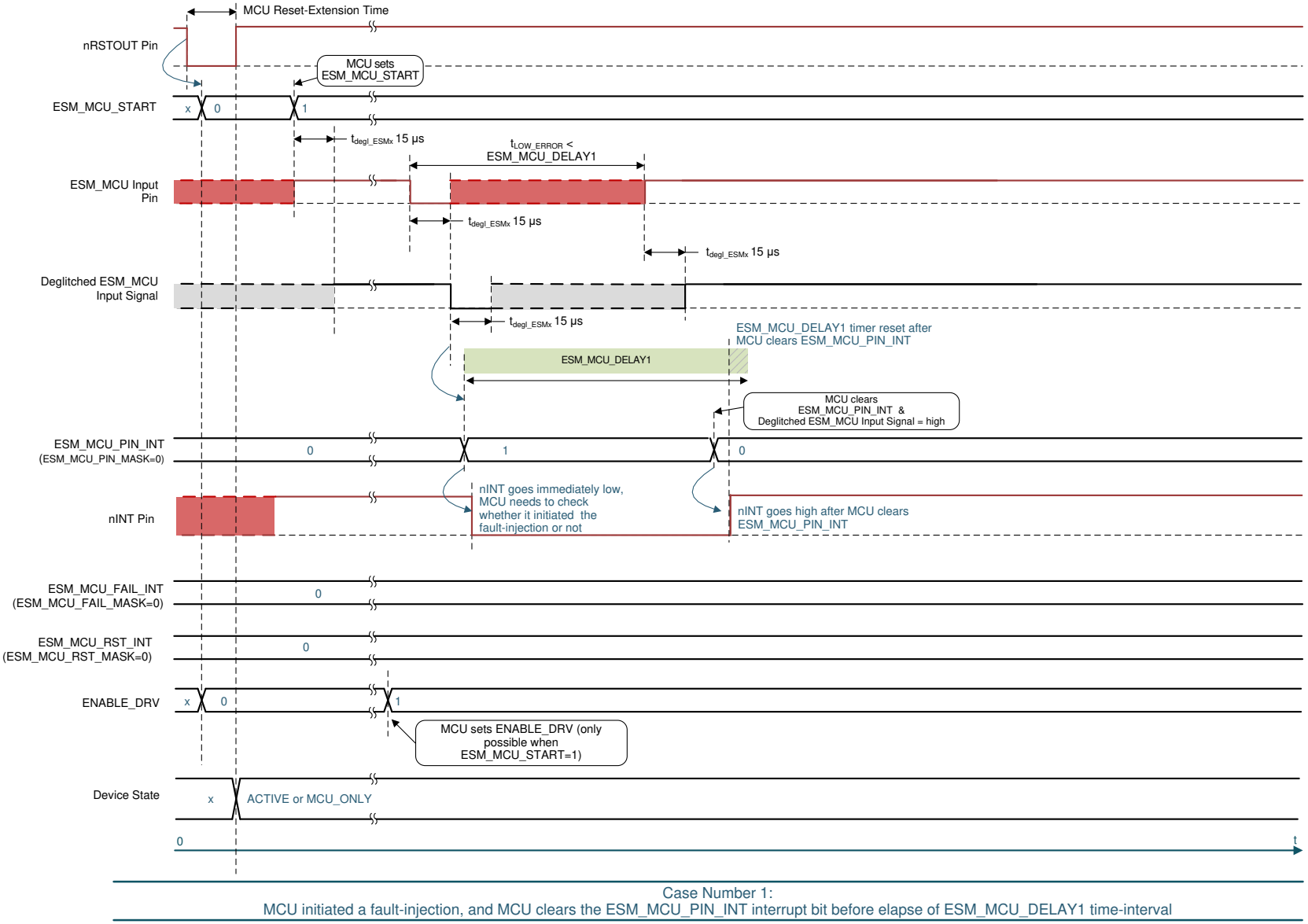

図 7-25. Example Waveform for ESM_MCU in Level Mode - Case Number 1: ESM_MCU Signal Recovers Before Elapse of Delay-1 time-interval

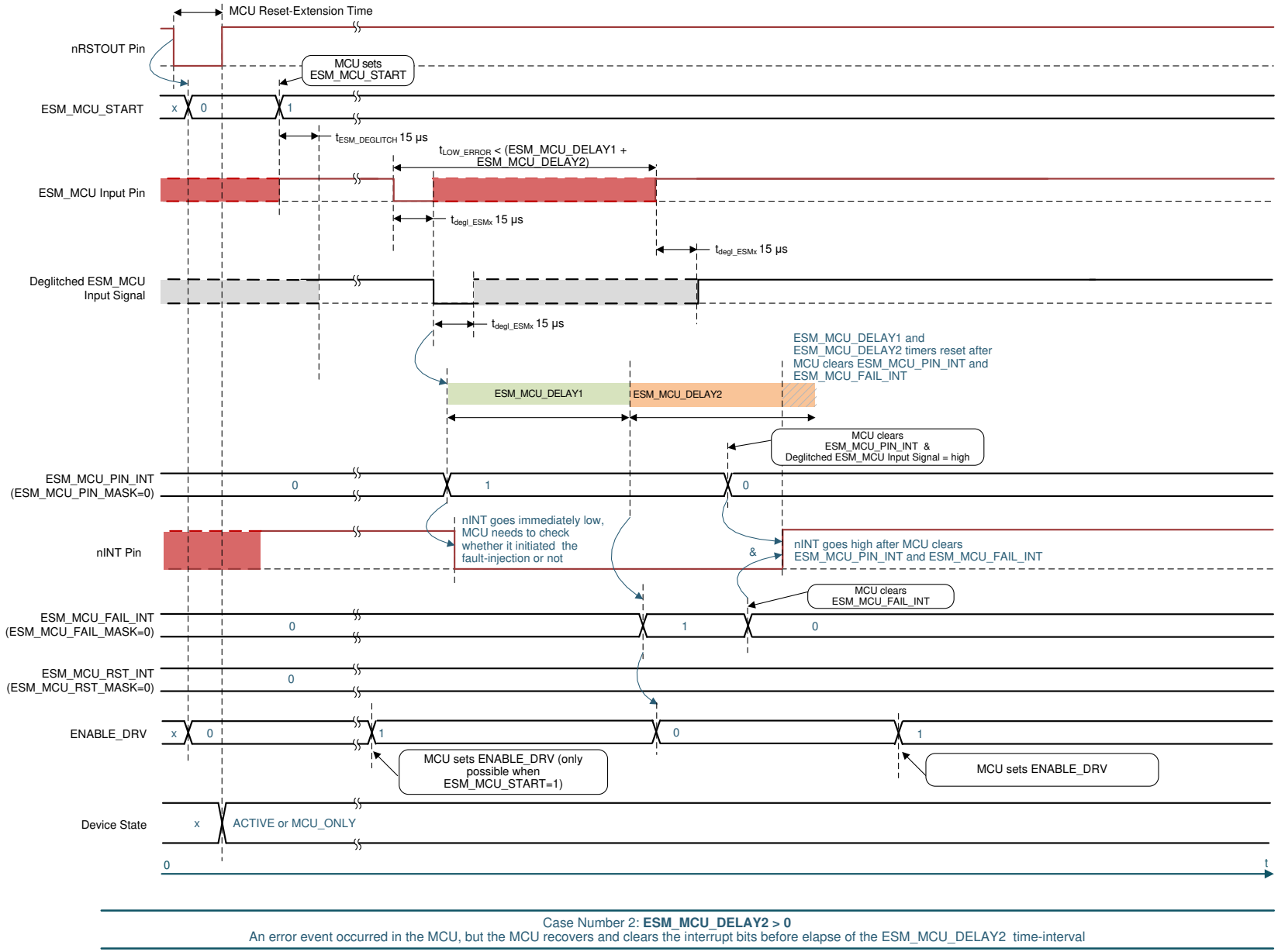

Case Number 2: **ESM_MCU_DELAY2 > 0**
An error event occurred in the MCU, but the MCU recovers and clears the interrupt bits before elapse of the ESM_MCU_DELAY2 time-interval

図 7-26. Example Waveform for ESM_MCU in Level Mode – Case Number 2: Delay-2 Not Set To 0 and ESM_MCU_ENDRV=1, ESM_MCU Signal Recovers Before Elapse of Delay-2 Time-Interval

Copyright © 2022 Texas Instruments Incorporated

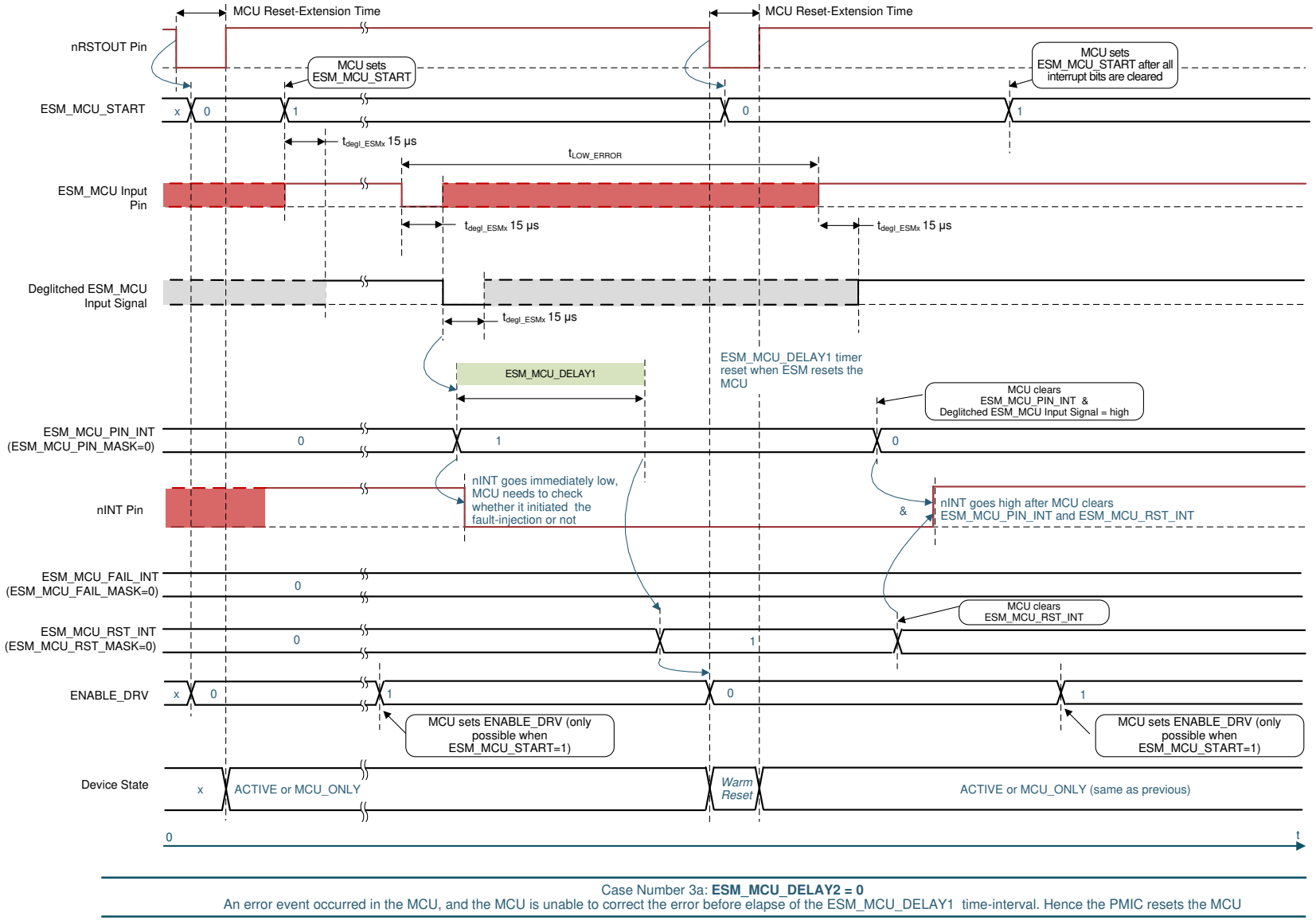

図 7-27. Example Waveform for ESM_MCU in Level Mode – Case Number 3a: Delay-2 Set To 0 and ESM_MCU_ENDRV=1, ESM_MCU Input Signal Recovers Too Late and MCU-Reset Occurs

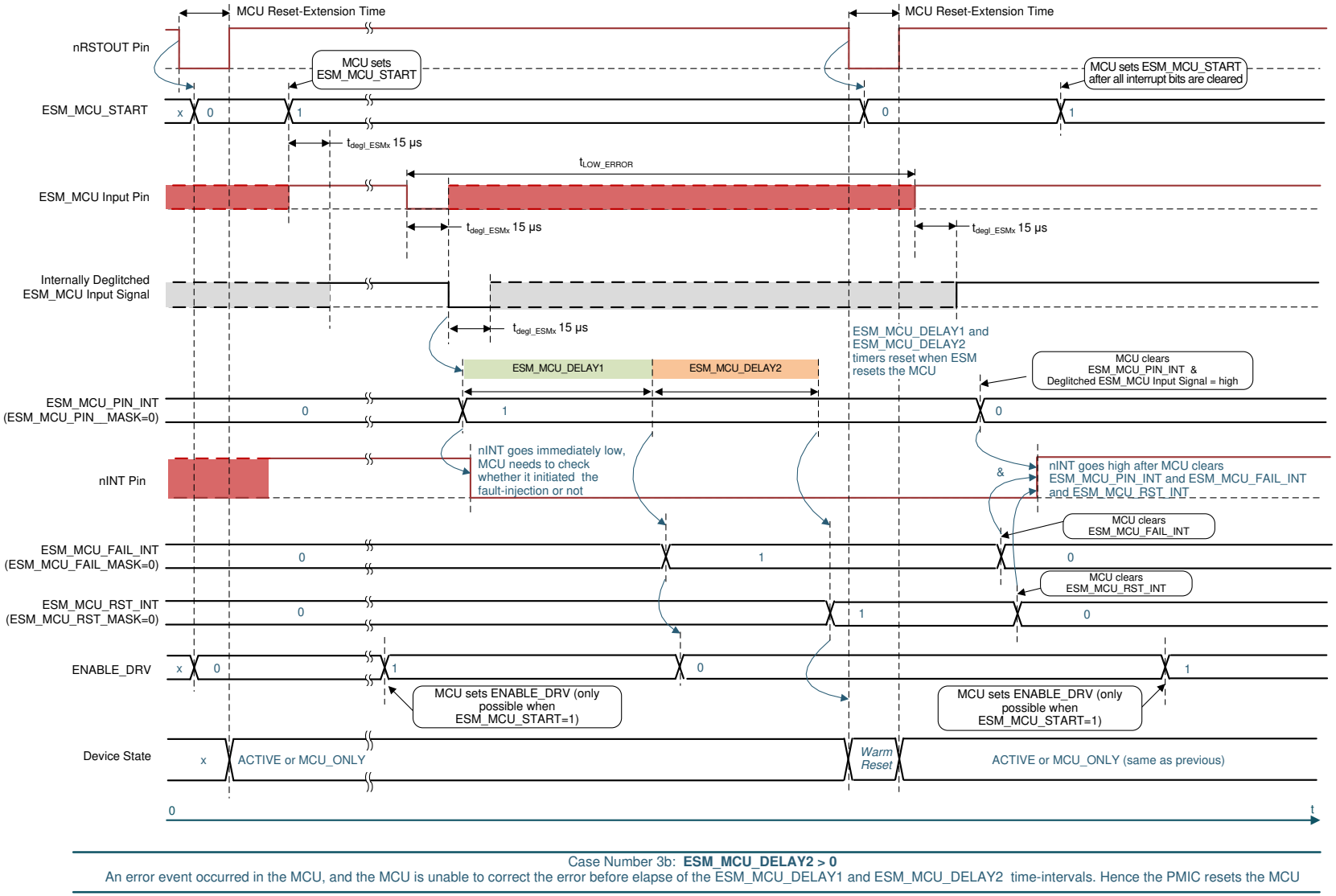

図 7-28. Example Waveform for ESM_MCU in Level Mode – Case Number 3b: Delay-2 Not Set to 0 and ESM_MCU_ENDRV=1, ESM_MCU Input Signal Recovers Too Late and MCU-Reset Occurs

Copyright © 2022 Texas Instruments Incorporated

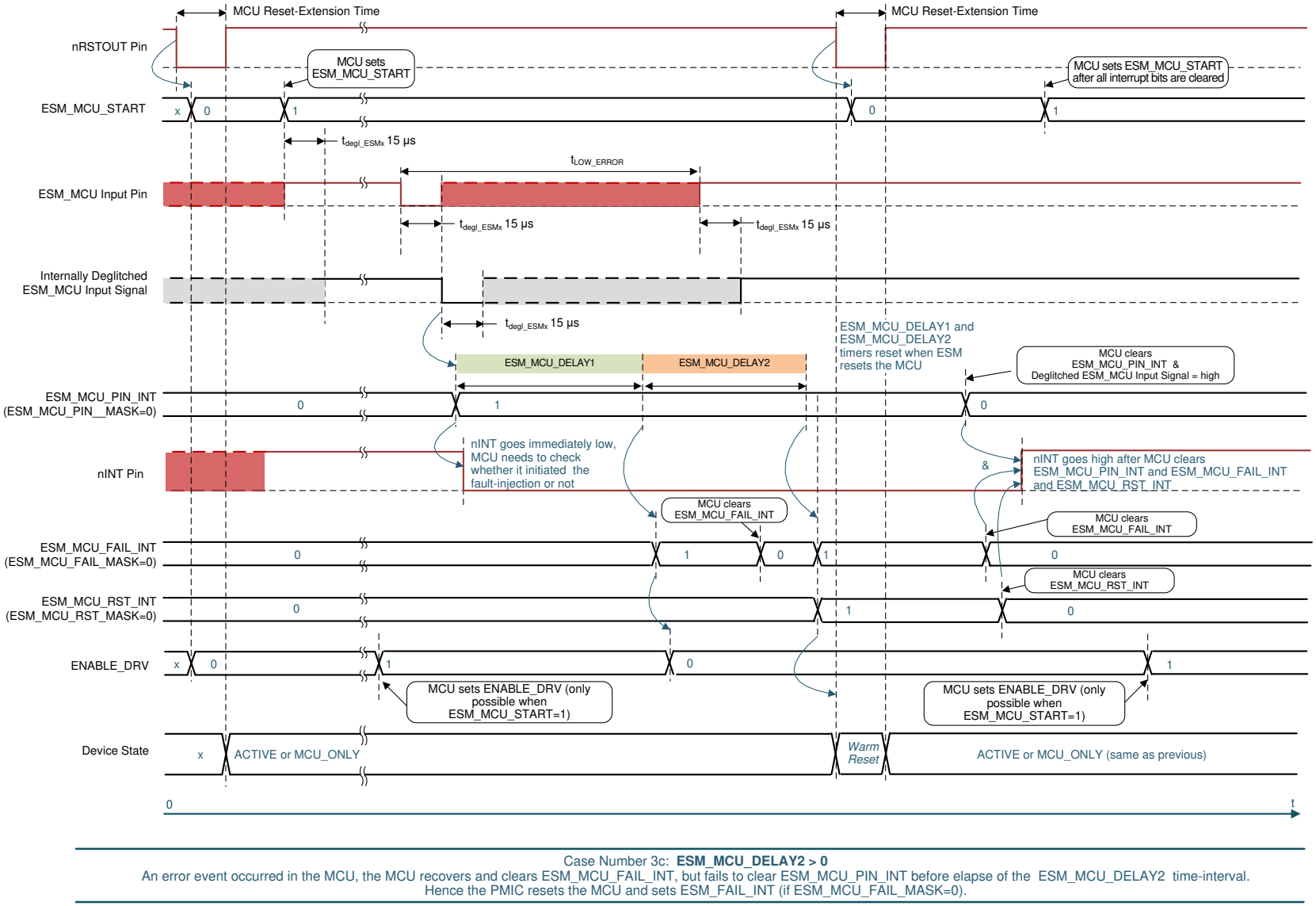

Case Number 3c: **ESM_MCU_DELAY2 > 0**
An error event occurred in the MCU, the MCU recovers and clears ESM_MCU_FAIL_INT, but fails to clear ESM_MCU_PIN_INT before elapse of the ESM_MCU_DELAY2 time-interval.
Hence the PMIC resets the MCU and sets ESM_FAIL_INT (if ESM_MCU_FAIL_MASK=0).

図 7-29. Example Waveform for ESM_MCU in Level Mode – Case Number 3c: Delay-2 Not Set to 0 and ESM_MCU_ENDRV=1, MCU Fails to Clear ESM_MCU_PIN_INT Before Elapse of the ESM_MCU_DELAY2

7.3.9.3 PWM Mode

7.3.9.3.1 Good-Events and Bad-Events

In PWM mode, the ESM_MCU monitors the high-pulse and low-pulse duration times its PWM input signal as follows:

- After a falling edge, the ESM_MCU starts monitoring the low-pulse time-duration. If the input signal remains low after exceeding the maximum low-pulse time-threshold ($t_{LOW_MAX_TH}$), the ESM_MCU detects a bad event and the low-pulse duration counter reinitializes. Each time the signal further exceeds the maximum threshold, the ESM_MCU detects a bad event. On the next rising edge on the input signal, the ESM starts the high-pulse time-duration monitoring
- After a rising edge, the ESM_MCU starts monitoring the high-pulse time-duration. If the input signal remains high after exceeding the maximum high-pulse time-threshold ($t_{HIGH_MAX_TH}$), the ESM_MCU detects a bad event and the high-pulse duration counter reinitializes. Each time the signal further exceeds the maximum threshold, the ESM_MCU detects a bad event. On the next falling edge on the input signal, the ESM_MCU starts the low-pulse time-duration monitoring.

In addition, the ESM_MCU detects a bad-event in PWM mode if one of the events that follow occurs on the deglitched signal of the input pin nERR_MCU:

- A high-pulse time-duration that is longer than the maximum high-pulse time-threshold ($t_{HIGH_MAX_TH}$) that is configured in register bits ESM_MCU_HMAX[7:0].
- A high-pulse time-duration that is shorter than the minimum high-pulse time-threshold ($t_{HIGH_MIN_TH}$) that is configured in register bits ESM_MCU_HMIN[7:0].
- A low-pulse time-duration that is longer than the maximum low-pulse time-threshold ($t_{LOW_MAX_TH}$) that is configured in register bits ESM_MCU_LMAX[7:0].
- A low-pulse time-duration that is less than the minimum low-pulse time-threshold ($t_{LOW_MIN_TH}$) that is configured in register bits ESM_MCU_LMIN[7:0].

The ESM_MCU detects a good-event in PWM mode if one of the events that follow occurs on the deglitched signal of the input pin nERR_MCU:

- A low-pulse time-duration within the minimum and maximum low-pulse time-thresholds is followed by a high-pulse time-duration within the minimum and maximum high-pulse time-thresholds, or
- A high-pulse duration within the minimum and maximum high-pulse time-thresholds is followed by a low-pulse duration within the minimum and maximum low-pulse time-thresholds

Register bits ESM_MCU_HMAX[7:0] set the maximum high-pulse time-threshold ($t_{HIGH_MAX_TH}$) for the ESM_MCU. Use 式 15 and 式 16 to calculate the worst-case values for the $t_{HIGH_MAX_TH}$:

$$\text{Min. } t_{HIGH_MAX_TH} = (15\ \mu s + \text{ESM_MCU_HMAX[7:0]} \times 15\ \mu s) \times 0.95 \quad (15)$$

$$\text{Max. } t_{HIGH_MAX_TH} = (15\ \mu s + \text{ESM_MCU_HMAX[7:0]} \times 15\ \mu s) \times 1.05 \quad (16)$$

ESM_MCU_HMIN[7:0] set the minimum high-pulse time-threshold ($t_{HIGH_MIN_TH}$) for the ESM. Use 式 17 and 式 18 to calculate the worst-case values for the $t_{HIGH_MIN_TH}$:

$$\text{Min. } t_{HIGH_MIN_TH} = (15\ \mu s + \text{ESM_MCU_HMIN[7:0]} \times 15\ \mu s) \times 0.95 \quad (17)$$

$$\text{Max. } t_{HIGH_MIN_TH} = (15\ \mu s + \text{ESM_MCU_HMIN[7:0]} \times 15\ \mu s) \times 1.05 \quad (18)$$

ESM_MCU_LMAX[7:0] set the maximum low-pulse time-threshold ($t_{LOW_MAX_TH}$) for the ESM_MCU. Use 式 19 and 式 20 to calculate the worst-case values for the $t_{LOW_MAX_TH}$:

$$\text{Min. } t_{LOW_MAX_TH} = (15\ \mu s + \text{ESM_MCU_LMAX[7:0]} \times 15\ \mu s) \times 0.95 \quad (19)$$

$$\text{Max. } t_{LOW_MAX_TH} = (15\ \mu s + \text{ESM_MCU_LMAX[7:0]} \times 15\ \mu s) \times 1.05 \quad (20)$$

ESM_MCU_LMIN[7:0] set the minimum low-pulse time-threshold ($t_{LOW_MIN_TH}$) for the ESM. Use 式 21 and 式 22 to calculate the worst-case values for the $t_{LOW_MIN_TH}$:

Copyright © 2022 Texas Instruments Incorporated

$$\text{Min. } t_{LOW_MIN_TH} = (15\ \mu s + ESM_MCU_LMIN[7:0] \times 15\ \mu s) \times 0.95 \quad (21)$$

$$\text{Max. } t_{LOW_MIN_TH} = (15\ \mu s + ESM_MCU_LMIN[7:0] \times 15\ \mu s) \times 1.05 \quad (22)$$

Please note that when setting up the minimum and the maximum low-pulse or high-pulse time-thresholds need to be configured such that clock tolerances from the LP876242-Q1 and from the processor are incorporated. 式 23, 式 24, 式 25, and 式 26 are a guideline on how to incorporate these clock-tolerances:

$$ESM_MCU_HMIN[7:0] < 0.5 \times (ESM_MCU_HMAX[7:0] + ESM_MCU_HMIN[7:0]) \times 0.95 \times (1 - MCUclock\ tolerance) \quad (23)$$

$$ESM_MCU_HMAX[7:0] > 0.5 \times (ESM_MCU_HMAX[7:0] + ESM_MCU_HMIN[7:0]) \times 1.05 \times (1 + MCU\ clock\ tolerance) \quad (24)$$

$$ESM_MCU_LMIN[7:0] < 0.5 \times (ESM_MCU_LMAX[7:0] + ESM_MCU_LMIN[7:0]) \times 0.95 \times (1 - MCUclock\ tolerance) \quad (25)$$

$$ESM_MCU_LMAX[7:0] > 0.5 \times (ESM_MCU_LMAX[7:0] + ESM_MCU_LMIN[7:0]) \times 1.05 \times (1 + MCU\ clock\ tolerance) \quad (26)$$

7.3.9.3.2 ESM Error-Counter

If the ESM_MCU detects a bad-event, it increments its error-counter (bits ESM_MCU_ERR_CNT[4:0]) by 2. If the ESM_MCU detects a good-event, it decrements its error-counter (bits ESM_MCU_ERR_CNT[4:0]) by 1.

The device clears the ESM_MCU error counter when ESM_MCU_START=0.

The ESM_MCU error-counter has a threshold (bits ESM_MCU_ERR_CNT_TH[3:0]) that the MCU can configure if the ESM_MCU_START bit is 0. If the ESM_MCU error-counter value is above its configured threshold, the ESM_MCU has detected a so-called ESM-error and starts the Error-Handling Procedure as described in セクション 7.3.9.1. If the ESM_MCU error-counter reached a value equal or less its configured threshold before the elapse of the configured delay-1 or delay-2 intervals and the MCU software clears all ESM_MCU related interrupt bits, the ESM-error is no longer present and the ESM_MCU stops the Error-Handling Procedure as described in セクション 7.3.9.1. If the ESM-error persists such that the configured delay-1 and delay-2 times elapse, the ESM_MCU sends a ESM_MCU_RST trigger to the PFSM and the device clears the ESM_MCU_START bit. After the PFSM completes the handling of the ESM_MCU_RST trigger, the device re-initializes the ESM_MCU.

7.3.9.3.2.1 ESM Start-Up in PWM Mode

After the MCU has set the start bit of ESM (bit ESM_MCU_START), there are two possible scenarios:

1. The deglitched signal of the monitored input pin has a low level at the moment the MCU sets the start bit. In this scenario, the ESM starts the following procedure:
   a. Start a timer with a time-length according the value configured in ESM_MCU_LMAX[7:0] .
   b. Wait for a first rising edge on its deglitched input signal.
   c. If the rising edge comes before the configured time-length elapses, the ESM skips the next step and starts to monitor the high-pulse duration time. Hereafter, the ESM detects good-events or bad-events as described in セクション 7.3.9.3.1. 図 7-31 shows an example this scenario as Case Number 1.
   d. If the configured time-length (configured in ESM_MCU_LMAX[7:0]) elapses, the ESM detects a bad-event and increments the error-counter with +2. Hereafter, the ESM detects good-events or bad-events as described in セクション 7.3.9.3.1. 図 7-33 shows an example this scenario as Case Number 3.
   e. If the ESM error-counter value is above its configured threshold, the ESM has detected a so-called ESM-error and starts the Error-Handling Procedure as described in セクション 7.3.9.3.1.
   f. During this Error-Handling Procedure, the ESM continues to monitor its input pin, and updates the error-counter accordingly when it detects good-events or bad-events, until the Error-Handling Procedure reaches the step in which the ESM sends an ESM_RST trigger to the PFSM, which, depending on the PFSM configuration, resets the MCU . 図 7-34 shows a scenario in which the device resets the MCU as Case Number 4.
   g. If the ESM error-counter reaches a value equal or less its configured threshold before the elapse of the configured delay-1 or delay-2 time-intervals and the MCU software clears all ESM related interrupt bits, the ESM-error is no longer present and the ESM stops the Error-Handling Procedure as described in セクション 7.3.9.3.1.

2. The deglitched signal monitored input pin has a high level at the moment the MCU sets the start bit. In this scenario, the ESM starts the following procedure:
   a. Start a timer with a time-length according the value configured in ESM_MCU_HMAX[7:0] .
   b. Wait for a first falling edge on its deglitched input signal.
   c. If the falling edge comes before the configured time-length elapses, the ESM skips the next step and starts to monitor the low-pulse duration time. Hereafter, the ESM detects good-events or bad-events as described in セクション 7.3.9.3.1. 図 7-32 shows an example this scenario as Case Number 2.
   d. If the configured time-length (configured in ESM_MCU_HMAX[7:0]) elapses, the ESM detects a bad-event and increments the error-counter with +2. Hereafter, the ESM detects good-events or bad-events as described in セクション 7.3.9.3.1.
   e. If the ESM error-counter value is above its configured threshold, the ESM has detected a so-called ESM-error and starts the Error-Handling Procedure as described in セクション 7.3.9.3.1.
   f. During this Error-Handling Procedure, the ESM continues to monitor its input pin, and updates the error-counter accordingly when it detects good-events or bad-events, until the Error-Handling Procedure reaches the step in which the ESM sends an ESM_RST trigger to the PFSM, which, depending on the PFSM configuration, resets the MCU , as Case Number 4.
   g. If the ESM error-counter reaches a value equal or less its configured threshold before the elapse of the configured delay-1 or delay-2 time-intervals and the MCU software clears all ESM related interrupt bits, the ESM-error is no longer present and the ESM stops the Error-Handling Procedure as described in セクション 7.3.9.3.1.

7.3.9.3.3 ESM Flow Chart and Timing Diagrams in PWM Mode

For a complete overview on how the ESM_MCU works in PWM Mode, please refer to the flow-chart in 図 7-30. In this flow-chart, the _x stands for _MCU 図 7-31, 図 7-32, 図 7-33, and 図 7-34 show example waveforms for several error-cases for the ESM_MCU in PWM Mode. In this flow-chart, the _x stands for _MCU

Copyright © 2022 Texas Instruments Incorporated

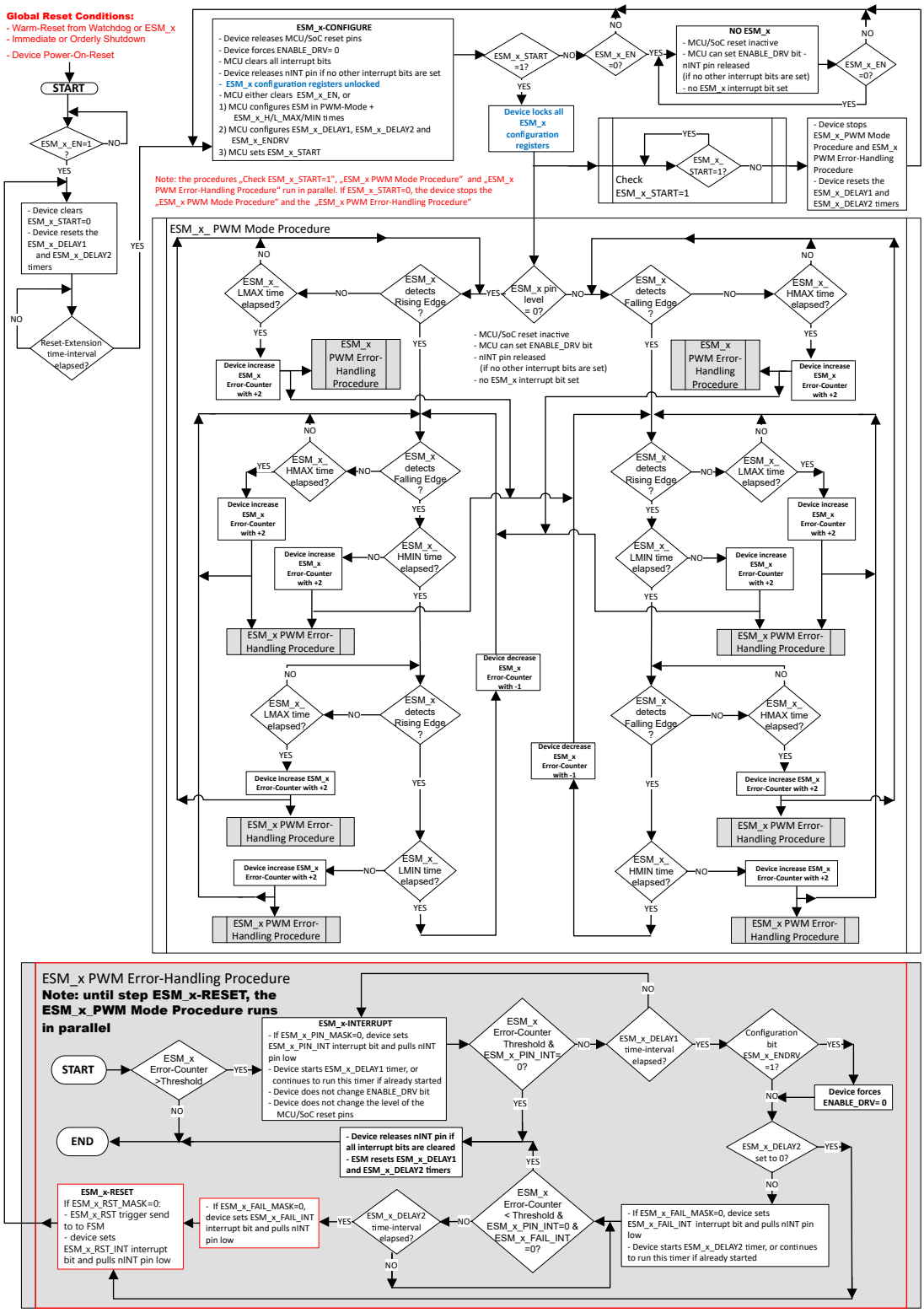

図 7-30. Flow-Chart for ESM_MCU in PWM Mode

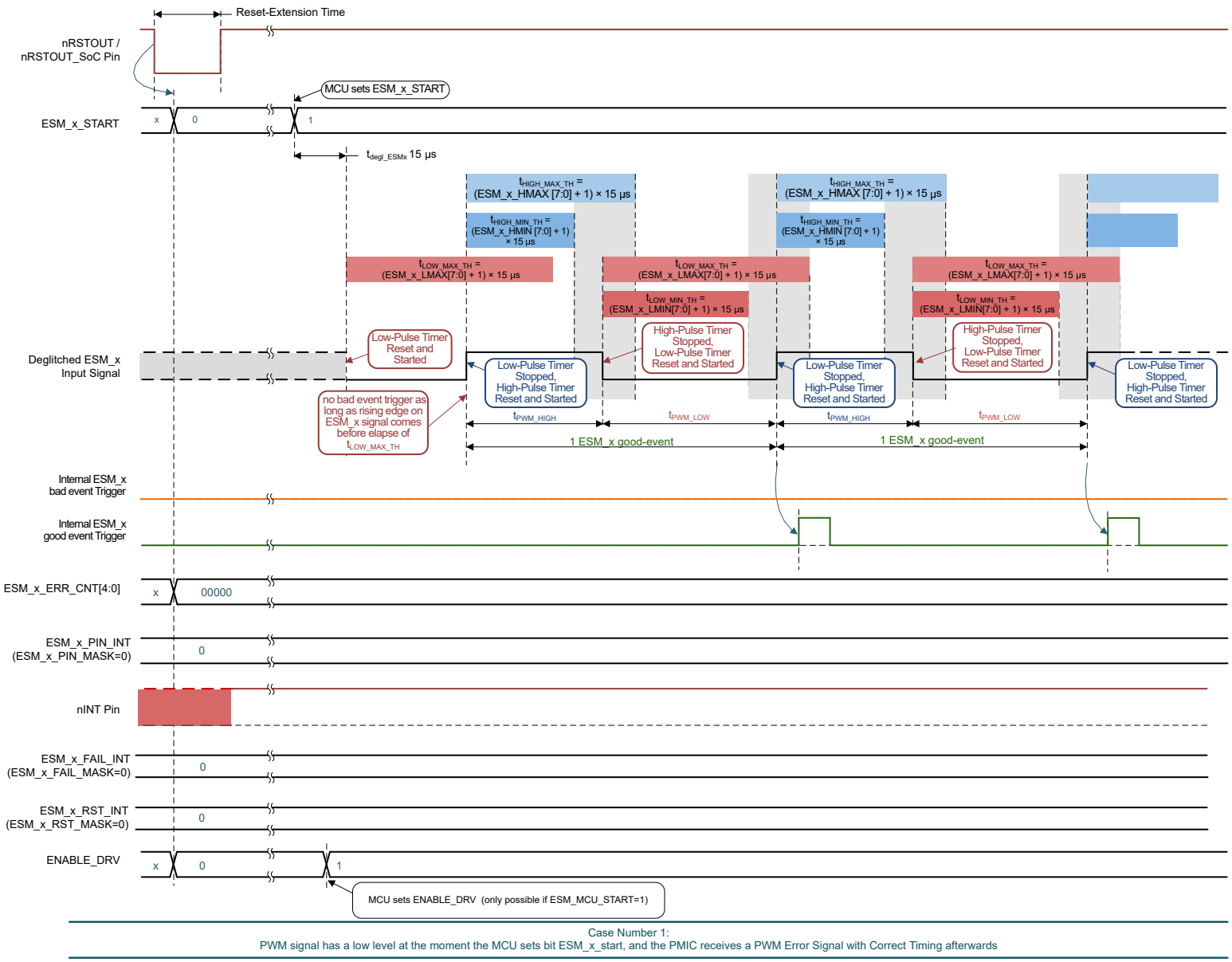

図 7-31. Example Waveform for ESM_MCU in PWM Mode – Case Number 1: ESM_MCU Starts with Low-Level at Deglitched Input signal, and Receives Correct PWM Signal Afterwards. (The _x stand for _MCU)

Copyright © 2022 Texas Instruments Incorporated

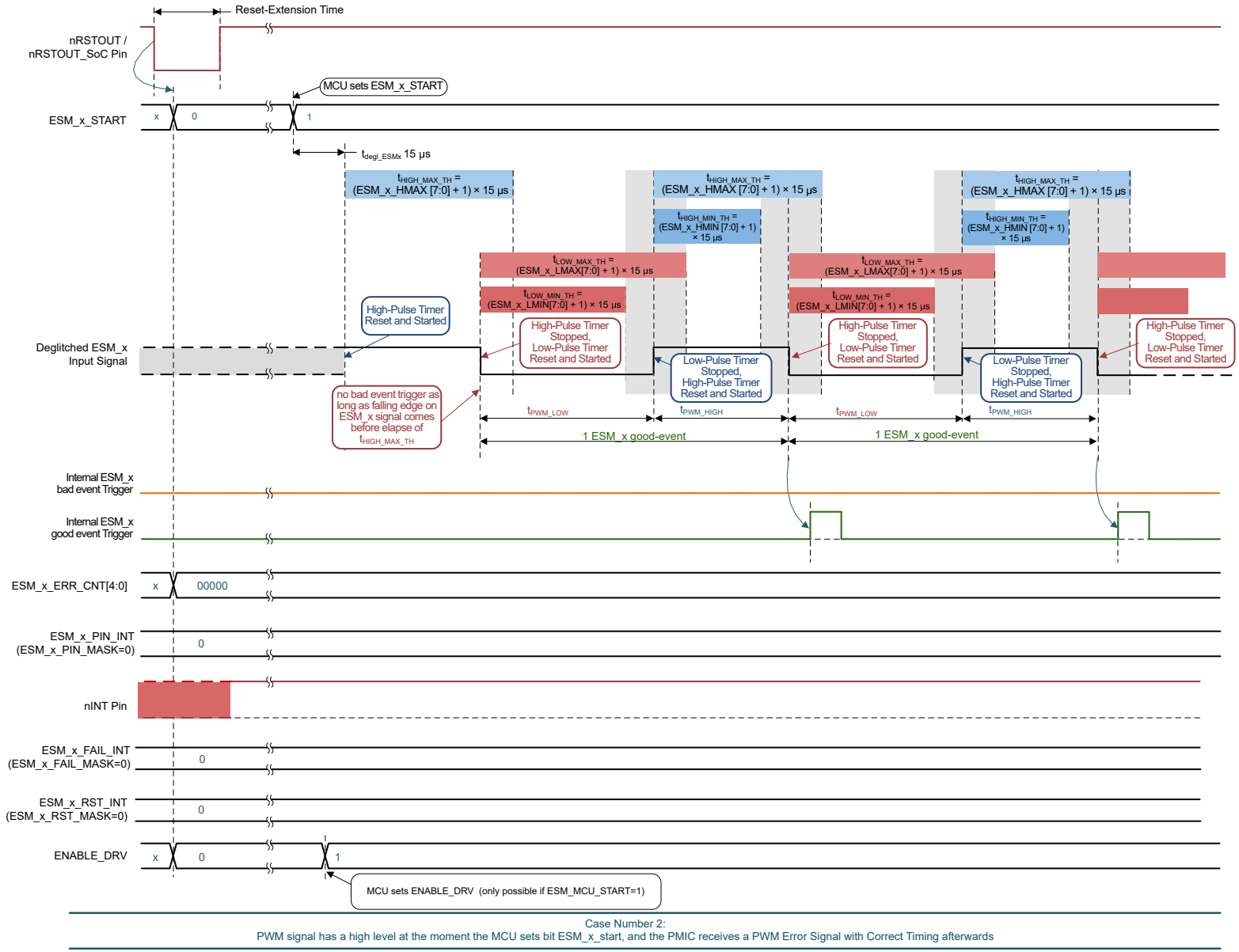

図 7-32. Example Waveform for ESM_MCU in PWM Mode – Case Number 2: ESM_MCU Starts with High-Level at Deglitched Input Signal, and Receives Correct PWM Signal Afterwards (The _x stand for _MCU)

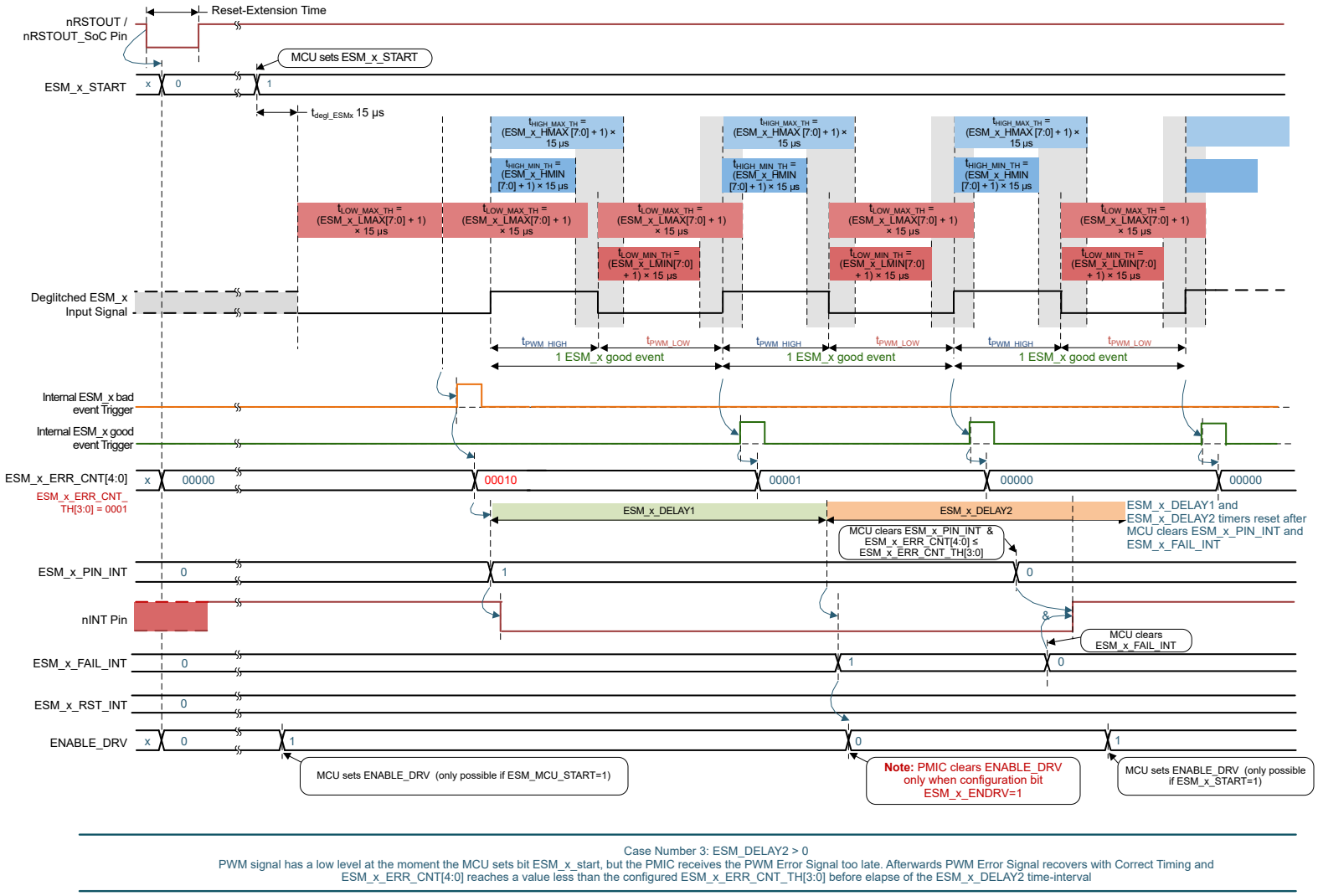

図 7-33. Example Waveform for ESM in PWM Mode – Case Number 3: ESM_MCU Starts with Low-Level at Deglitched Input Signal, but Receives Too Late a Correct PWM Signal Afterwards (The _x stand for _MCU)

Copyright © 2022 Texas Instruments Incorporated

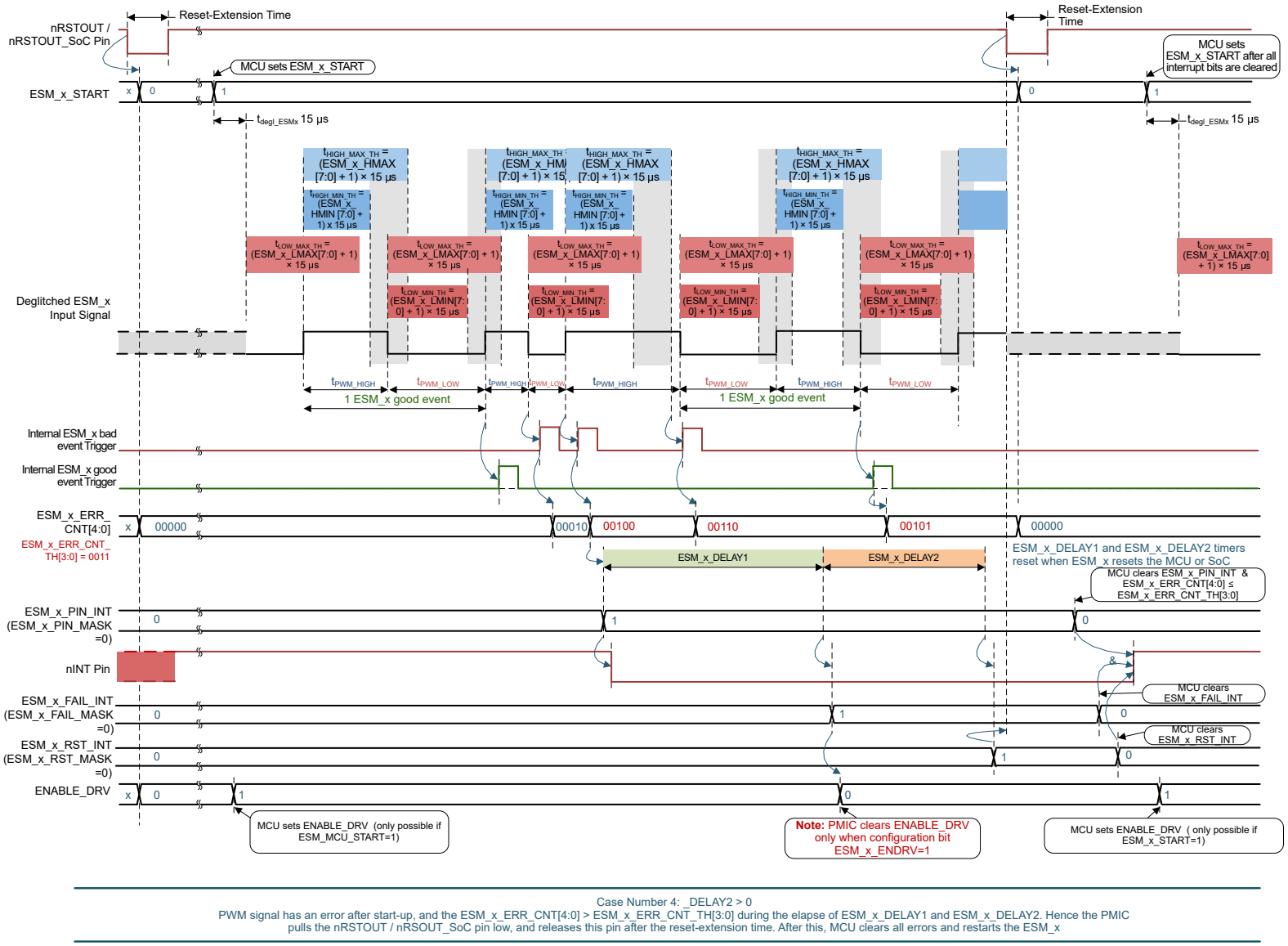

図 7-34. Example Waveform for ESM_MCU in PWM Mode – Case Number 4: ESM_MCU Starts with Low-Level at Deglitched Input Signal and Receives a Correct PWM Signal. Afterwards the ESM_MCU Detects Bad Events, and the PWM Signal Recovers Too Late which Leads to an ESM_MCU Reset Trigger to the PFSM (The _x stand for _MCU)

7.4 Device Functional Modes

7.4.1 Device State Machine

The LP876242-Q1 device integrates a finite state machine (FSM) engine that manages the state of the device during operating state transitions. The device supports NVM-configurable mission states with configurable input triggers for transitions between states. Any resources, including the 4 BUCK regulators, the two VMON voltage monitors and all of the digital IO pins including the 10 GPIO pins on the device can be controlled during power sequencing. When a resource is not controlled or configured through a power sequence, the resource is left in the default state as pre-configured by the NVM.

Each resource can be pre-configured through the NVM configuration, or re-configured through register bits. Therefore, the user can statically control the resource through the control interfaces (I^2C or SPI), or the FSM can automatically control the resource during state sequences.

The FSM is powered by an internal LDO that is automatically enabled when VCCA supply is available to the device. Ensuring that the VCCA supply is the first supply available to the device is important to ensure proper operation of all the power resources as well as the control interface and device IOs.

There are 3 parts of the FSM that control the operational modes of the LP876242-Q1 device:

- Fixed Device Power Finite State Machine (FFSM)
- Pre-configurable Finite State Machine (PFSM) for Mission States (ACTIVE, MCU_ONLY, S2R, DEEP_SLEEP)
- Error Handling Operations

The PFSM provides configurable rail and voltage monitoring sequencing utilizing instructions in configuration memory. This flexibility enables customers to alter power-up sequences on a platform basis. The FFSM handles the majority of fixed functionality that is internally mandated and common to all platforms.

7.4.1.1 Fixed Device Power FSM

The Fixed Device Power portion of the FSM engine manages the power up of the device before the power rails are fully enabled and ready to power external loadings, and the power down of the device when in the event of insufficient power supply or device or system error conditions. While the device is in one of the Hardware Device Powers states, the ENABLE_DRV bit remains low.

The definitions and transition triggers of the Device Power States are fixed and cannot be reconfigured.

Following are the definitions of the Device Power states:

NO SUPPLY The device is not powered by a valid energy source on the system power rail. The device is completely powered off.

LP_STANDBY The device can enter this state from a mission state after receiving a valid OFF request by ENABLE pin or I2C trigger and the LP_STANDBY_SEL = 1. The internal LDO (LDOVINT) is enabled and VCCA monitoring is disabled to minimize power dissipation. As the accurate VCCA monitoring is disabled, the VCCA voltage must be above 1.7 V during LP_STANDBY state, or stay below 1.7 V for minimum 20 ms to ensure that the digital is reset correctly. If this requirement for VCCA cannot be met, STANDBY state must be used instead of LP_STANDBY. The wake-up from LP_STANDBY state can be initiated by active edge on ENABLE signal or by WKUPx pins.

INIT The device is powered by a valid supply on the system power rail (VCCA ≥ VCCA_UV). If the device was previously in LP_STANDBY state, it has received an external wake-up signal at the WKUP1/2 pins, or an On Request from the ENABLE pin. Device digital and monitor circuits are powered up. The PMIC reads its internal NVM memory in this state and configures default values to registers, IO configuration and FSM accordingly.

BOOT BIST The device is running the built-in self-test routine that includes both the ABIST , the LBIST/ and the CRC. An option is available to shorten the device power up time from the NO_SUPPLY state by setting the NVM bit FAST_BOOT_BIST = '1' to skip the LBIST. Software

Copyright © 2022 Texas Instruments Incorporated

can also set the FAST_BIST = '1' to skip LBIST after the device wakes up from the LP STANDBY state. When the device arrives at this state from the SAFE_RECOVERY state, LBIST is automatically skipped if it has not previously failed. If LBIST failed, but passed after multiple re-tries before exceeding the recovery counter limit, the device powers up normally. The following NVM bits are pre-configured options that can be set to disable parts of the ABIST orCRC tests if further sequence time reduction is required (please refer to the User's Guide of the orderable part number):

- REG_CRC_EN = '0': disables the register map and SRAM CRC check
- VMON_ABIST_EN = '0': disables the ABIST for the VMON OV/UV function

注

Note: the BIST tests are executed as parallel processes, and the longest process determines the total BIST duration

RUNTIME BIST A request was received from the MCU to exercise a run-time built-in self-test (RUNTIME_BIST) on the device. No rails are modified and all external signals, including all I^2C or SPI interface communications, are ignored during BIST. If the device passed BIST, it resumes the previous operation. If the device failed BIST, it shuts down all of the regulator outputs and proceed to the SAFE RECOVERY state. In order to avoid a register CRC error, all register writes must be avoided after the request for the BIST operation until the device pulls the nINT pin low to indicate the completion of BIST. The results of the BIST are indicated by the BIST_PASS_INT or the BIST_FAIL_INT bits.

注

For executing the RUNTIME_BIST, the system software must perform following steps:

Before RUNTIME_BIST request:

1) Set VCCA_UV_MASK, VCCA_OV_MASK, all BUCKx_UV_MASK, all BUCKx_OV_MASK, VMONx_UV_MASK and VMONx_OV_MASK bits to 1

2) If PGOOD pin is used, clear all PGOOD_SEL_BUCKx and PGOOD_SEL_VMONx bits to 0

After completion of RUNTIME_BIST:

1) Clear VCCA_UV_MASK, VCCA_OV_MASK, all VMONx_UV_MASK, all VMONx_OV_MASK, all BUCKx_UV_MASK and all BUCKx_OV_MASK bits to 0

SAFE RECOVERY

The device meets the qualified error condition for immediate or ordered shutdown request. If the error is recovered within the recovery time interval or meets the restart condition, the device increments the recovery counter, and returns to INIT state if the recovery counter value does not exceed the threshold value. Until a supply power cycle occurs, the device stays in the SAFE RECOVERY state if one of the following conditions occur:

- the recovery counter exceeds the threshold value
- the die temperature cannot be reduced to less than T_{WARN} level
- VCCA stays above OVP threshold

When multiple system conditions occur simultaneously that demand power state arbitration, the device goes to the higher priority state according to the following priority order:

1. NO SUPPLY
2. SAFE_RECOVERY
3. LP_STANDBY
4. MISSION STATES

図 7-35 shows the power transition states of the FSM engine.

Copyright © 2022 Texas Instruments Incorporated

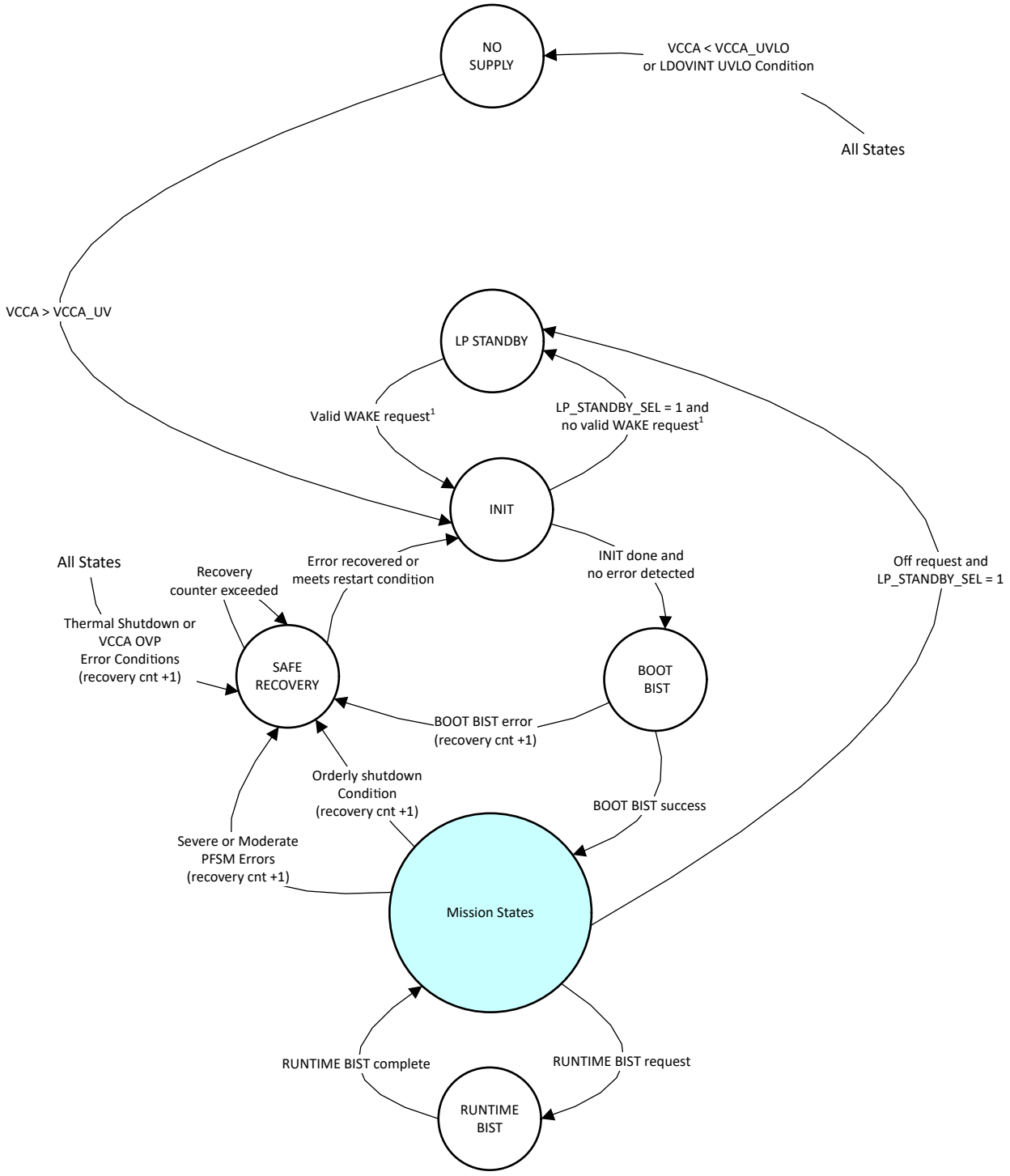

[1] A valid WAKE request consist of:

- ENABLE high level if the device arrived the LP_STANDBY state through a low level at the ENABLE pin, or
- LWKUP1 or WKUP2 detection if the device arrived the LP_STANDBY state through writing to a TRIGGER_I2C_0 bit, or
- SPMI wake-up event

図 7-35. State Diagram for Device Power States

7.4.1.1.1 Register Resets and EEPROM read at INIT state

When the device transitions from LP_STANDBY to INIT state, the registers are reset and EEPROM is read based on FIRST_STARTUP_DONE and SKIP_LP_STANDBY_EE_READ bits. At the transition from SAFE RECOVERY to INIT, the SKIP_LP_STANDBY_EE_READ bit is ignored as shown in the table.

表 7-7. Register resets and EEPROM read at INIT state

State transition	FIRST_STARTUP_DONE	SKIP_LP_STANDBY_EE_READ	Conf_registers	Other registers
LP_STANDBY → INIT	Don't care	1	No changes	No changes
LP_STANDBY → INIT	1	0	No changes	Reset and defaults read from EEPROM
LP_STANDBY → INIT	0	0	Reset and defaults read from EEPROM	Reset and defaults read from EEPROM
SAFE RECOVERY → INIT	1	Don't care	No changes	Reset and defaults read from EEPROM
SAFE RECOVERY → INIT	0	Don't care	Reset and defaults read from EEPROM	Reset and defaults read from EEPROM

The Conf_registers are:

- ENABLE_POL bit in the ENABLE_CONF register
- FSD_MASK, ENABLE_MASK bits in the MASK_STARTUP register
- FIRST_STARTUP_DONE, STARTUP_DEST, FAST_BIST, LP_STANDBY_SEL, and SKIP_LP_STANDBY_EE_READ bits in the STARTUP_CTRL register
- SCRATCH_PAD_x bits in the SCRATCH_PAD_REG_x registers
- PFSM_DELAYx bits in the PFSM_DELAY_REG_x registers

7.4.1.2 Pre-Configurable Mission States

When the device arrives at a mission state, all rail sequencing is controlled by the pre-configurable FSM engine (PFSM) through the configuration memory. The configuration memory allows configurations of the triggers and the operation states that together form the configurable sub state machine within the scope of mission states. This sub state machine can be used to control and sequence the different voltage outputs as well as any GPIO outputs that can be used as enable for external rails. When the device is in a mission state, it has the capacity to supply the processor and other platform modules depending on the power rail configuration. The definitions and transition triggers of the mission states are configurable through the NVM configuration. Unlike the user registers, the PFSM definition stored in the NVM cannot be modified during normal operation. When the PMIC determines that a transition to another operation state is necessary, it reads the configuration memory to determine what sequencing is needed for the state transition.

表 7-11 shows how the trigger signals for each state transition can come from a variety of interface or GPIO inputs, or potential error sources. 図 7-36 shows how the device processes all of the possible error sources inside the PFSM engine, a hierarchical mask system is applied to filter out the common errors that can be handled by interrupt only, and categorize the other error sources as Severe Global Error, Moderate Global Error, and so forth. The filtered and categorized triggers are sent into the PFSM engine, that then determines the entry and exit condition for each configured mission state.

Copyright © 2022 Texas Instruments Incorporated

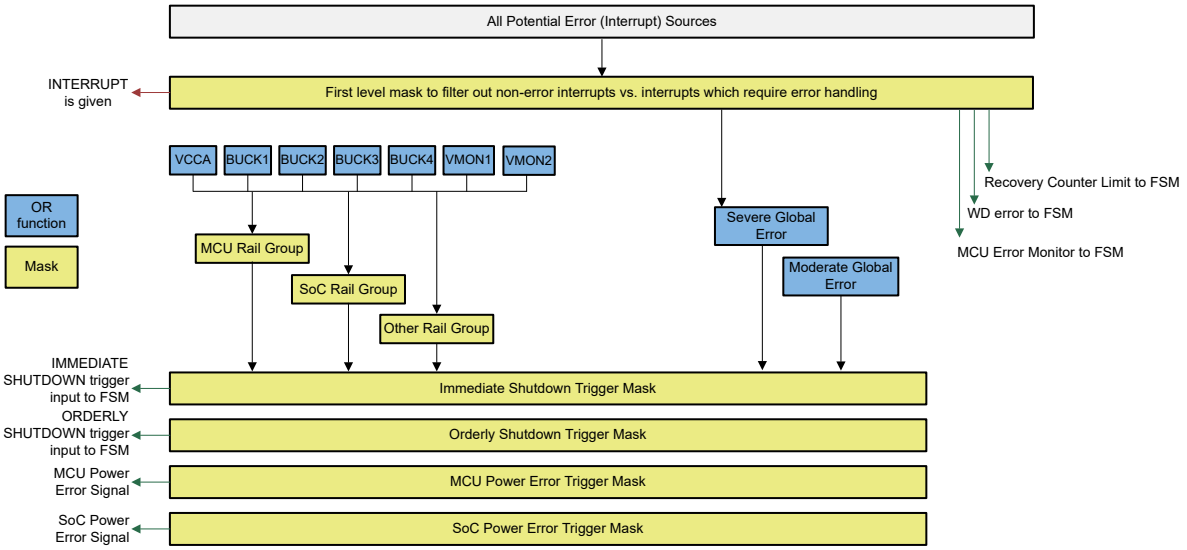

図 7-36. Error Source Hierarchical Mask System

図 7-38 shows an example of how the PFSM engine utilizes instructions to execute the configured device state and sequence transitions of the mission state-machine. 表 7-8 provides the instruction set and usage description of each instruction in the following sections. セクション 7.4.1.2.2 describes how the instructions are stored in the NVM memory.

表 7-8. PFSM Instruction set

Command Opcode	Command	Command Description
"0000"	REG_WRITE_MASK_PAGE0_IMM	Write the specified data, except the masked bits, to the specified page 0 register address.
"0001"	REG_WRITE_IMM	Write the specified data to the specified register address.
"0010"	REG_WRITE_MASK_IMM	Write the specified data, except the masked bits, to the specified register address.
"0011"	REG_WRITE_VOUT_IMM	Write the target voltage of a specified regulator after a specified delay.
"0100"	REG_WRITE_VCTRL_IMM	Write the operation mode of a specified regulator after a specified delay.
"0101"	REG_WRITE_MASK_SREG	Write the data from a scratch register, except the masked bits, to the specified register address.
"0110"	SREG_READ_REG	Write scratch register (REG0-3) with data from a specified address.
"0111"	WAIT	Execution is paused until the specified type of the condition is met or timed out.
"1000"	DELAY_IMM	Delay the execution by a specified time.
"1001"	DELAY_SREG	Delay the execution by a time value stored in the specified scratch register.
"1010"	TRIG_SET	Set a trigger destination address for a given input signal or condition.
"1011"	TRIG_MASK	Sets a trigger mask that determines which triggers are active.
"1100"	END	Mark the final instruction in a sequential task.
"1101"	REG_WRITE_BIT_PAGE0_IMM	Write the specified data to the BIT_SEL location of the specified page 0 register address.
"1110"	REG_WRITE_WIN_PAGE0_IMM	Write the specified data to the SHIFT location of the specified page 0 register address.
"1111"	SREG_WRITE_IMM	Write the specified data to the scratch register (REG0-3).

Copyright © 2022 Texas Instruments Incorporated

7.4.1.2.1 PFSM Commands

Following section describes each PFSM command in detail and provides example usage codes. More information on example NVM configuration, available device options and documentations can be found at Fully Customizable Integrated Power.

7.4.1.2.1.1 REG_WRITE_IMM Command

Description: Write the specified data to the specified register address

Assembly command: **REG_WRITE_IMM [ADDR=]<Address> [DATA=]<Data>**

Address and Data can be in any literal integer format (decimal, hex, and so forth).

'ADDR=' and 'DATA=' are optional. When included, the parameters can be in any order.

Examples:
- **REG_WRITE_IMM 0x1D 0x55** — Write value 0x55 to address 0x1D
- **REG_WRITE_IMM ADDR=0x10 DATA=0xFF** — Write value 0xFF to address 0x10
- **REG_WRITE_IMM DATA=0xFF ADDR=0x10** — Write value 0xFF to address 0x10

7.4.1.2.1.2 REG_WRITE_MASK_IMM Command

Description: Write the specified data, except the masked bits, to the specified register address

Assembly command: **REG_WRITE_MASK_IMM [ADDR=]<Address> [DATA=]<Data> [MASK=]<Mask>**

Address, Data, and Mask can be in any literal integer format (decimal, hex, and so forth).

'ADDR=', 'DATA=', and 'MASK=' are optional. When included, the parameters can be in any order.

Examples:
- **REG_WRITE_MASK_IMM 0x1D 0x80 0xF0** — Write 0b1000 to the upper 4 bits of the register at address 0x1D
- **REG_WRITE_MASK_IMM ADDR=0x10 DATA=0x0F MASK=0xF0** — Write 0b1111 to the lower 4 bits of the register at address 0x10
- **REG_WRITE_MASK_IMM DATA=0x0F MASK=0xF0 ADDR=0x10** — Write 0b1111 to the lower 4 bits of the register at address 0x10

7.4.1.2.1.3 REG_WRITE_MASK_PAGE0_IMM Command

Description: Write the specified data, except the masked bits, to the specified page 0 register address

Assembly command: **REG_WRITE_MASK_PAGE0_IMM [ADDR=]<Address> [DATA=]<Data> [MASK=]<Mask>**

Address, Data, and Mask can be in any literal integer format (decimal, hex, and so forth).

'ADDR=', 'DATA=', and 'MASK=' are optional. When included, the parameters can be in any order.

Examples:
- **REG_WRITE_MASK_PAGE0_IMM 0x1D 0x80 0xF0** — Write 0b1000 to the upper 4 bits of the register at address 0x1D
- **REG_WRITE_MASK_PAGE0_IMM ADDR=0x10 DATA=0x0F MASK=0xF0** — Write 0b1111 to the lower 4 bits of the register at address 0x10
- **REG_WRITE_MASK_PAGE0_IMM DATA=0x0F MASK=0xF0 ADDR=0x10** — Write 0b1111 to the lower 4 bits of the register at address 0x10

7.4.1.2.1.4 REG_WRITE_BIT_PAGE0_IMM Command

Description: Write the specified data to the BIT_SEL location of the specified page 0 register address

Assembly command: **REG_WRITE_BIT_PAGE0_IMM [ADDR=]<Address> [BIT=]<Bit> [DATA=]<Data>**

Address, Bit, and Data can be in any literal integer format (decimal, hex, and so forth).

'ADDR=', 'BIT=', and 'DATA=' are optional. When included, the parameters can be in any order.

Copyright © 2022 Texas Instruments Incorporated

Examples:

- **REG_WRITE_BIT_PAGE0_IMM 0x1D 7 0** — Write '0' to bit 7 of the register at address 0x1D
- **REG_WRITE_BIT_PAGE0_IMM ADDR=0x10 BIT=3 DATA=1** — Write 0b1 to bit 3 of the register at address 0x10

7.4.1.2.1.5 REG_WRITE_WIN_PAGE0_IMM Command

Description: Write the specified data to the SHIFT location of the specified page 0 register address

Assembly command: **REG_WRITE_WIN_PAGE0_IMM [ADDR=]<Address> [DATA=]<Data> [MASK=]<Mask> [SHIFT=]<Shift>**

Address, Data, Mask, and Shift can be in any literal integer format (decimal, hex, and so forth).

'ADDR=', 'DATA=', 'MASK=', and 'SHIFT=' are optional. When included, the parameters can be in any order.

Examples:

- **REG_WRITE_WIN_PAGE0_IMM ADDR=0x1D DATA=0x8 MASK=0x13 SHIFT=2** — Write bits 5:4 to 0b10 to the register at address 0x1D. Data and mask give 5-bit value 0bx10xx. These two bits are then left shifted 2 bit-positions to give full byte value of 0bxx10xxxx, hence sets bits 5:4 to 0b10.

7.4.1.2.1.6 REG_WRITE_VOUT_IMM Command

Description: Write the target voltage of a specified regulator after a specified delay. This command is a spin-off of the REG_WRITE_IMM command with the intention to save instruction bits.

Assembly command: **REG_WRITE_VOUT_IMM [REGULATOR=]<Regulator ID> [SEL=]<VSEL> [VOUT=]<Vout> [DELAY=]<Delay>**

'REGULATOR=', "SEL=', 'VOUT=', and 'DELAY=' are options. When included, the parameters can be in any order.

Regulator ID = BUCK1, BUCK2, BUCK3, BUCK4.

VSEL selects the BUCKn_VSET1 or BUCKn_VSET2 bits which the command writes to if Regulator ID is BUCK1-4. VSEL is defined as: '0': BUCKn_VSET1, '1': BUCKn_VSET2, '2': Currently Active BUCKn_VSET, '3': Currently Inactive BUCKn_VSET.

VOUT = output voltage in mV or V. Unit must be listed.

DELAY = delay time in ns, µs, ms, or s. If no unit is entered, this field must be an integer value between 0-63, which becomes the threshold count for the counter running a step size specified in the register PFSM_DELAY_STEP. The delay value is rounded to the nearest achievable delay time based on the current step size. Current step size is based on the default NVM setting or a SET_DELAY value from a previous command in the same sequence. Assembler reports an error if the step size is too large or too small to meet the delay.

Examples:

- **REG_WRITE_VOUT_IMM BUCK3 2 1.05 V 100 µs** — Sets BUCK3 to 1.05 V by updating the active BUCK3_VSET register after 100 µs

7.4.1.2.1.7 REG_WRITE_VCTRL_IMM Command

Description: Write the operation mode of a specified regulator after a specified delay. This command is a spin-off of the REG_WRITE_IMM command with the intention to save instruction bits.

Assembly command: **REG_WRITE_VCTRL_IMM [REGULATOR=]<Regulator ID> [VCTRL=]<VCTRL> [MASK=]<Mask> [DELAY=]<Delay> [DELAY_MODE=]<Delay Mode>**

'REGULATOR=', 'VCTRL=', 'MASK=', and 'DELAY=' are options. When included, the parameters can be in any order.

Regulator ID = BUCK1, BUCK2, BUCK3, BUCK4.

VCTRL = 0-15, in hex, decimal, or binary format. Data to write to the following regulator control fields:

- BUCKs: BUCKn_PLDN, BUCKn_VMON_EN, BUCKn_VSEL, BUCKn_FPWM_MP, BUCKn_FPWM, and BUCKn_EN

DELAY = delay time in ns, µs, ms, or s. If no unit is entered, this field must be an integer value between 0-63, which becomes the threshold count for the counter running a step size specified in the register PFSM_DELAY_STEP. Delay value is be rounded to the nearest achievable delay time based on the current step size. Current step size is based on the default NVM setting or a SET_DELAY value from a previous command in the same sequence. Assembler reports an error if the step size is too large or too small to meet the delay.

Delay Mode must be one of the below options: MATCH_EN = 0 (Delay if VCTRL enable bit mismatches) MATCH_ALL = 1 (Delay if any VCTRL bits mismatch) ALWAYS = 2 (Delay always)

Examples:

- **REG_WRITE_VCTRL_IMM BUCK3 0x00 0xE0 100 µs** — Sets BUCK3 to OFF (VCTRL bits = 0b00000) after 100 µs

7.4.1.2.1.8 REG_WRITE_MASK_SREG Command

Description: Write the data from a scratch register, except the masked bits, to the specified register address

Assembly command: **REG_WRITE_MASK_SREG [REG=]<Scratch Register> [ADDR=]<Address> [MASK=]<Mask>**

'REG=', 'ADDR=', and 'MASK=' are options. When included, the parameters can be in any order.

Scratch Register can be R0, R1, R2, or R3.

Address and Mask can be in any literal integer format (decimal, hex, and so forth).

Examples:

- **REG_WRITE_MASK_SREG R2 0x22 0x00** — Write the content of scratch register 2 to address 0x22
- **REG_WRITE_MASK_SREG REG=R0 ADDR=0x054 MASK=0xF0** — Write the lower 4 bits of scratch register 0 to address 0x54

7.4.1.2.1.9 SREG_READ_REG Command

Description: Write scratch register (REG0-3) with data from a specified address

Assembly command: **SREG_READ_REG [REG=]<Scratch Register> [ADDR=]<Address>**

'REG=' and 'ADDR=' are options. When included, the parameters can be in any order.

Scratch Register can be R0, R1, R2, or R3.

Address can be in any literal integer format (decimal, hex, and so forth).

Examples:

- **SREG_READ_REG R2 0x15** — Read the content of address 0x15 and write the data to scratch register 2
- **SREG_READ_REG ADDR=0x077 REG=R3** — Read the content of address 0x77 and write the data to scratch register 3

7.4.1.2.1.10 SREG_WRITE_IMM Command

Description: Write the specified data to the scratch register (REG0-3)

Assembly command: **SREG_WRITE_IMM [REG=]<Register> [DATA=]<Data>**

Data can be in any literal integer format (decimal, hex, and so forth).

Register can be R0, R1, R2, or R3.

'REG=' and 'DATA=' are options. When included, the parameters can be in any order.

Examples:

- **SREG_WRITE_IMM R2 0x15** — Write 0x15 to scratch register 2
- **SREG_WRITE_IMM ADDR=0x077 REG=R3** — Read 0x77 to scratch register 3

Copyright © 2022 Texas Instruments Incorporated

7.4.1.2.1.11 WAIT Command

Description: Wait upon a condition of a given type. Execution is paused until the specified type of the condition is met or timed out

Assembly command: **WAIT [COND=]<Condition> [TYPE=]<Type> [TIMEOUT=]<Timeout> [DEST=]<Destination>**

Alternative assembly command: **JUMP [DEST=]<Destination>**

'COND=', 'TYPE=', 'TIMEOUT=', and 'DEST=' are options. When included, the parameters can be in any order.

Condition are listed in 表 7-9. Examples: GPIO1, BUCK1_PG, I2C_1

Type = LOW, HIGH, RISE, or FALL

Timeout = timeout value in ns, µs, ms, or s. If no unit is entered, this field must be an integer value between 0-63. Timeout value is be rounded to the nearest achievable time based on the current step size. Current step size is based on the default NVM setting or a SET_DELAY value from a previous command in the same sequence. Assembler reports an error if the step size is too large or too small to meet the delay.

Destination = Label to jump to if when timeout occurs. Destination must be after the WAIT statement in memory.

Memory space can be either '0' or '1'. '0' indicates the destination address is in the PFSM memory space. '1' indicates the destination address is external and represents a FSM state ID.

When using the jump command, the PFSM performs an unconditional jump. The command is be compiled as "WAIT COND=63 TYPE=LOW TIMEOUT=0 DEST=<Destination>". Condition 63 is a hardcoded 1, so the condition is never satisfied and hence always times out. Therefore this command always jumps to the destination.

Examples:

- **WAIT GPIO4 RISE 1 s <Destination> 0** — Wait to execute the command at the specified SRAM address when a rise edge is detected at GPIO4, or after 1 second
- **WAIT COND=BUCK1_PG TYPE=HIGH TIMEOUT=500 µs DEST=<mcu2act_seq>** — Wait to execute the commands at <mcu2act_seq> address as soon as BUCK1 output is within power-good range, or after 500 µs

表 7-9. WAIT Command Conditions

COND_SEL	Condition Name	COND_SEL	Condition Name	COND_SEL	Condition Name	COND_SEL	Condition Name
0	GPIO1	16	N/A	32	I2C_0	48	LP_STANDBY_SEL
1	GPIO2	17	N/A	33	I2C_1	49	N/A
2	GPIO3	18	N/A	34	I2C_2	50	N/A
3	GPIO4	19	N/A	35	I2C_3	51	N/A
4	GPIO5	20	PGOOD	36	I2C_4	52	N/A
5	GPIO6	21	TWARN_EVENT	37	I2C_5	53	N/A
6	GPIO7	22	INTERRUPT_PIN	38	I2C_6	54	N/A
7	GPIO8	23	N/A	39	I2C_7	55	N/A
8	GPIO9	24	N/A	40	SREG0_0	56	N/A
9	GPIO10	25	N/A	41	SREG0_1	57	N/A
10	N/A	26	N/A	42	SREG0_2	58	N/A
11	BUCK1_PG	27	N/A	43	SREG0_3	59	N/A
12	BUCK2_PG	28	N/A	44	SREG0_4	60	N/A
13	BUCK3_PG	29	N/A	45	SREG0_5	61	N/A
14	BUCK4_PG	30	N/A	46	SREG0_6	62	0
15	N/A	31	N/A	47	SREG0_7	63	1

7.4.1.2.1.12 DELAY_IMM Command

Description: Delay the execution by a specified time

Assembly command: **DELAY_IMM <Delay>**

Delay = delay time in ns, µs, ms, or s. If no unit is entered, this field must be an integer value between 0-63. Delay value is be rounded to the nearest achievable time based on the current step size. Current step size is based on the default NVM setting or a SET_DELAY value from a previous command in the same sequence. Assembler reports an error if the step size is too large or too small to meet the delay.

Examples:
- **DELAY_IMM 100 µs** — Delay execution by 100 µs
- **DELAY_IMM 10 ms** — Delay execution by 10 ms
- **DELAY_IMM 8** — Delay execution by 8 ticks of the current PFSM time step

7.4.1.2.1.13 DELAY_SREG Command

Description: Delay the execution by a time value stored in the specified scratch register.

Assembly command: **DELAY_SREG <Register>**

Register can be R0, R1, R2, or R3.

Examples:
- **DELAY_SREG R0** — Delay execution by the time value stored in scratch register0

7.4.1.2.1.14 TRIG_SET Command

Description: Set a trigger destination address for a given input signal or condition. These commands must be defined at the beginning of PFSM configuration memory.

Assembly command: **TRIG_SET [DEST=]<Destination> [ID=]<Trig_ID> [SEL=]<Trig_sel> [TYPE=]<Trig_type> [IMM=]<IMM> [EXT=]<Memory space>**

'DEST=', 'ID=', 'SEL=''. 'TYPE=', 'IMM=', and 'EXT=' are options. When included, the parameters can be in any order.

Destination is the label where this trigger starts executing.

Trig_ID is the ID of the hardware trigger module to be configured (value range 0-27). They must be defined in numeric order based on the priority of the trigger.

Trig_Sel is the 'Trigger Name' from the 表 7-11. This 'Trigger Name' is the trigger signal to be associated with the specified TRIG_ID.

Trig_type = LOW, HIGH, RISE, or FALL.

IMM can be either '0' or '1''. = '0' if the trigger is not activated until the END command of a given task; '1' if the trigger is activated immediately and can abort a sequence.

REENTRANT can be either '0' or '1''. '1' permits a trigger to return to the current state, that allows a self-branching trigger to execute the current sequence again.

Memory space can be either '0' or '1''. '0' indicates the destination address is in the PFSM memory space. '1' indicates the destination address is external and represents a FSM state ID.

Examples:
- **TRIG_SET seq1 20 GPIO_1 LOW 0 0** — Set trigger 20 to be GPIO_1=Low, not immediate. When triggered, start executing at ‘seq1’ label.
- **TRIG_SET DEST=seq2 ID=15 SEL=WD_ERROR TYPE=RISE IMM=0 EXT=0** — Set trigger 15 to be rising WD_ERROR trigger, not immediate. When triggered, start executing at ‘seq2’ label.

Copyright © 2022 Texas Instruments Incorporated

7.4.1.2.1.15 TRIG_MASK Command

Description: Sets a trigger mask that determines which triggers are active. Setting a '0' enables the trigger, setting a '1' disables (masks) the trigger.

Assembly command: **TRIG_MASK <Mask value>**

Mask Value = 28-bit mask in any literal integer format (decimal, hex, and so forth).

Examples:

- **TRIG_MASK 0x5FF82F0** — Set the trigger mask to 0x5FF82F0

7.4.1.2.1.16 END Command

表 7-10 shows the format of the END commands.

表 7-10. END Command Format

Bit[3:0]
CMD
4 bits

Description: Marks the final instruction in a sequential task

Fields:

- CMD: Command opcode (0xC)

Assembly command: **END**

7.4.1.2.2 Configuration Memory Organization and Sequence Execution

The configuration memory is loaded from NVM into an SRAM. 図 7-37 shows an example configuration memory with only two configured sequences.

```
pfsm_start:
TRIG_SET DEST=sequence_name1 ID=0 SEL=trigger_name TYPE=high/low/rise/fall IMM=0/1 EXT=0/1
TRIG_SET DEST=sequence_name2 ID=1 SEL=trigger_name TYPE=high/low/rise/fall IMM=0/1 EXT=0/1
TRIG_SET DEST=sequence_name3 ID=2 SEL=trigger_name TYPE=high/low/rise/fall IMM=0/1 EXT=0/1
TRIG_SET DEST=sequence_name4 ID=4 SEL=trigger_name TYPE=high/low/rise/fall IMM=0/1 EXT=0/1
TRIG_SET DEST=sequence_name5 ID=4 SEL=trigger_name TYPE=high/low/rise/fall IMM=0/1 EXT=0/1
……
TRIG_MASK 0xFFFFFF0
END
sequence_name1
REG_WRITE_MASK_IMM ADDR=register_addr DATA=data MASK=mask_setting
REG_WRITE_MASK_IMM ADDR=register_addr DATA=data MASK=mask_setting
REG_WRITE_MASK_IMM ADDR=register_addr DATA=data MASK=mask_setting
REG_WRITE_VCTRL_IMM REGULATOR=regulator VCTRL=ctrl_setting MASK=mask_setting DELAY=delay_time
REG_WRITE_VCTRL_IMM REGULATOR=regulator VCTRL=ctrl_setting MASK=mask_setting DELAY=delay_time
DELAY_IMM delay_time
REG_WRITE_MASK_IMM ADDR=register_addr DATA=data MASK=mask_setting
REG_WRITE_VCTRL_IMM REGULATOR=regulator VCTRL=ctrl_setting MASK=mask_setting DELAY=delay_time
REG_WRITE_MASK_IMM ADDR=register_addr DATA=data MASK=mask_setting
TRIG_MASK 0xFC00EDF
END
……
sequence_name4
REG_WRITE_MASK_IMM ADDR=register_addr DATA=data MASK=mask_setting
DELAY_IMM delay_time
REG_WRITE_MASK_IMM ADDR=register_addr DATA=data MASK=mask_setting
REG_WRITE_VCTRL_IMM REGULATOR=regulator VCTRL=ctrl_setting MASK=mask_setting DELAY=delay_time
REG_WRITE_VCTRL_IMM REGULATOR=regulator VCTRL=ctrl_setting MASK=mask_setting DELAY=delay_time
DELAY_IMM delay_time
REG_WRITE_VCTRL_IMM REGULATOR=regulator VCTRL=ctrl_setting MASK=mask_setting DELAY=delay_time
REG_WRITE_MASK_IMM ADDR=register_addr DATA=data MASK=mask_setting
REG_WRITE_VCTRL_IMM REGULATOR=regulator VCTRL=ctrl_setting MASK=mask_setting DELAY=delay_time
REG_WRITE_MASK_IMM ADDR=register_addr DATA=data MASK=mask_setting
TRIG_MASK 0xFEF6EDC
END
```

These TRIG_SET instructions are used to define the trigger types which initiates each power state sequence. There are a total of 28 TRIG_SET available for each PMIC. TYPE parameter defines the type of trigger as:

High: active high (level sensitive)
Low: active low (level sensitive)
Rise: active high (edge sensitive)
Fall: active low (edge sensitive)

図 7-37. Configuration Memory Script Example

As soon as the PMIC state reaches the mission states, it starts reading from the configuration memory until it hits the first END command. Setting up the triggers (1-28) must be the first section of the configuration memory, as well as the first set of trigger configurations. The trigger configurations are read and mapped to an internal lookup table that contains the starting address associated with each trigger in the configuration memory. If the trigger destination is an FFSM state then the address contains the fixed state value. After the trigger configurations are read and mapped into the SRAM, these triggers control the execution flow of the state transitions. The signal source of each trigger is listed under 表 7-11.

When a trigger or multiple triggers are activated, the PFSM execution engine looks up the starting address associated with the highest priority unmasked trigger, and starts executing commands until it hits an END command. The last commands before END statement is generally the TRIG_MASK command, which directs the PFSM to a new set of unmasked trigger configurations, and the trigger with the highest priority in the new set is serviced next. Trigger priority is determined by the Trigger ID associated with each trigger. The priority of the trigger decreases as the associated trigger ID increases. As a result, the critical error triggers are usually located at the lowest trigger IDs.

The TRIG_SET commands specify if a trigger is immediate or non-immediate. Immediate triggers are serviced immediately, which involves branching from the current sequence of commands to reach a new target destination. The non-immediate triggers are accumulated and serviced in the order of priority through the execution of each given sequence until the END command in reached. Therefore, the trigger ID assignment for each trigger can be arranged to produce the desired PFSM behavior.

The TRIG_MASK command determines which triggers are active at the end of each sequence, and is usually placed just before the END instruction. The TRIG_MASK takes a 28-bit input to allow any combination of triggers to be enabled with a single command. Through the definition of the active triggers after each sequence execution the TRIG_MASK command can be conceptualized as establishing a power state.

The above sequence of waiting for triggers and executing the sequence associated with an activated trigger is the normal operating condition of the PFSM execution engine when the PMIC is in the MISSION state. The FFSM state machine takes over control from the execution engine each time an event occurs that requires a transition from the MISSION state of the PMIC to a fixed device state.

表 7-11. PFSM Trigger Selections

Trigger Name	Trigger Source
IMMEDIATE_SHUTDOWN	An error event causes one of the triggers defined in the FSM_TRIG_SEL_1/2 register to activate, and the intended action for the activated trigger is to *immediate shutdown* the device
MCU_POWER_ERROR	Output failure detection from a regulator which is assigned to the MCU rail group (x_GRP_SEL = '01')
ORDERLY_SHUTDOWN	An event which causes MODERATE_ERR_INT = '1'
FORCE_STANDBY	nPWRON long-press event when NPOWRON_SEL = '01', or ENABLE = '0' when NPOWERON_SEL = '00'
SPMI_WD_BIST_DONE	Completion of SPMI WatchDog BIST
ESM_MCU_ERROR	An event that causes ESM_MCU_RST_INT
WD_ERROR	An event that causes WD_RST_INT
SOC_POWER_ERROR	Output failure detection from a regulator which is assigned to the SOC rail group (x_GRP_SEL = '10')
A	NSLEEP2 and NSLEEP1 = '11'. More information regarding the NSLEEP1 and NSLEEP2 functions can be found under セクション 7.4.1.2.4.3
WKUP1	A rising or falling edge detection on a GPIO pin that is configured as WKUP1
SU_ACTIVE	A valid On-Request detection when STARTUP_DEST = '11'
B	NSLEEP2 and NSLEEP1 = '10'. More information regarding the NSLEEP1 and NSLEEP2 functions can be found under セクション 7.4.1.2.4.3
WKUP2	A rising or falling edge detection on a GPIO pin that is configured as WKUP2
SU_MCU_ONLY	A valid On-Request detection when STARTUP_DEST = '10'
C	NSLEEP2 and NSLEEP1 = '01', More information regarding the NSLEEP1 and NSLEEP2 functions can be found under セクション 7.4.1.2.4.3

Copyright © 2022 Texas Instruments Incorporated

表 7-11. PFSM Trigger Selections (continued)

Trigger Name	Trigger Source
D	NSLEEP2 and NSLEEP1 = '00'. More information regarding the NSLEEP1 and NSLEEP2 functions can be found under セクション 7.4.1.2.4.3
SU_STANDBY	A valid On-Request detection when STARTUP_DEST = '00'
SU_X	A valid On-Request detection when STARTUP_DEST = '01'
WAIT_TIMEOUT	PFSM WAIT command condition timed out. More information regarding the WAIT command can be found under セクション 7.4.1.2.1.11
GPIO1	Input detection at GPIO1 pin
GPIO2	Input detection at GPIO2 pin
GPIO3	Input detection at GPIO3 pin
GPIO4	Input detection at GPIO4 pin
GPIO5	Input detection at GPIO5 pin
GPIO6	Input detection at GPIO6 pin
GPIO7	Input detection at GPIO7 pin
GPIO8	Input detection at GPIO8 pin
GPIO9	Input detection at GPIO9 pin
GPIO10	Input detection at GPIO10 pin
I2C_0	Input detection of TRIGGER_I2C_0 bit
I2C_1	Input detection of TRIGGER_I2C_1 bit
I2C_2	Input detection of TRIGGER_I2C_2 bit
I2C_3	Input detection of TRIGGER_I2C_3 bit
I2C_4	Input detection of TRIGGER_I2C_4 bit
I2C_5	Input detection of TRIGGER_I2C_5 bit
I2C_6	Input detection of TRIGGER_I2C_6 bit
I2C_7	Input detection of TRIGGER_I2C_7 bit
SREG0_0	Input detection of SCRATCH_PAD_REG_0 bit 0
SREG0_1	Input detection of SCRATCH_PAD_REG_0 bit 1
SREG0_2	Input detection of SCRATCH_PAD_REG_0 bit 2
SREG0_3	Input detection of SCRATCH_PAD_REG_0 bit 3
SREG0_4	Input detection of SCRATCH_PAD_REG_0 bit 4
SREG0_5	Input detection of SCRATCH_PAD_REG_0 bit 5
SREG0_6	Input detection of SCRATCH_PAD_REG_0 bit 6
SREG0_7	Input detection of SCRATCH_PAD_REG_0 bit 7
0	Always '0'
1	Always '1'

Copyright © 2022 Texas Instruments Incorporated

7.4.1.2.3 Mission State Configuration

The Mission States portion of the FSM engine manages the sequencing of power rails and external outputs in the user defined states. The 図 7-38 is used as an example state machine that is defined through the configuration memory using the configuration FSM instructions.

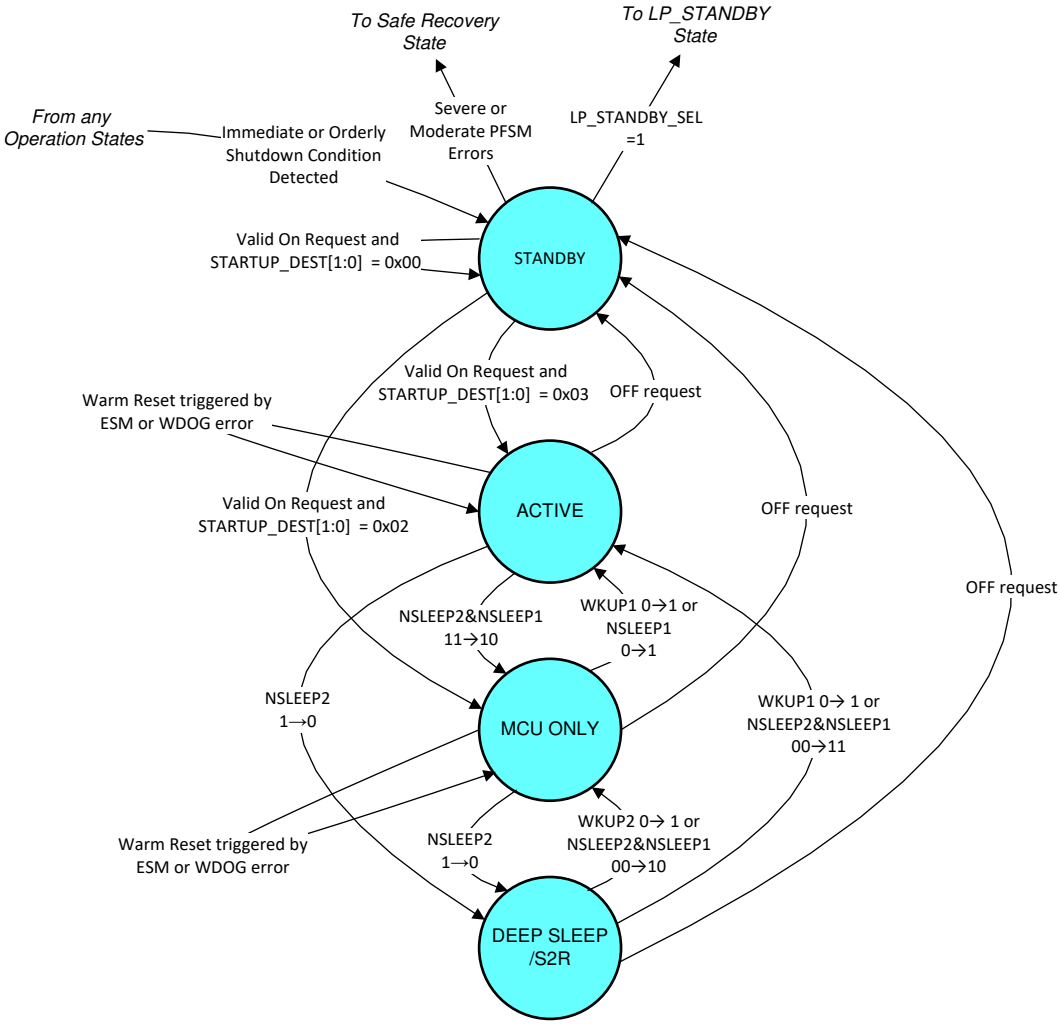

図 7-38. Example of a Mission State-Machine

Each power state (light blue bubbles in 図 7-38) defines the ON or OFF state and the sequencing timing of the external regulators and GPIO outputs. This example defines four power states: STANDBY, ACTIVE, MCU ONLY, and DEEP_SLEEP/S2R three power states: STANDBY, ACTIVE and RETENTION states. The priority order of these states is as follows:

1. ACTIVE
2. MCU ONLY
3. DEEP SLEEP/S2R
4. STANDBY

The transitions between each power state is determined by the trigger signals source pre-selected from 表 7-11. These triggers are then placed in the order of priority through the trigger ID assignment of each trigger source. The critical error triggers are placed first, some specified as immediate triggers that can interrupt an on-going sequence. The non-error triggers, which are used to enable state transitions during normal device operation, are then placed according to the priority order of the state the device is transitioning to. 表 7-12 list the trigger signal sources, in the order of priority, used to define the power states and transitions of the example mission state

Copyright © 2022 Texas Instruments Incorporated

machine shown in 図 7-38. This table also helps to determine which triggers must be masked by the TRIG_MASK command upon arriving a pre-defined power state to produce the desired PFSM behavior.

表 7-12. List of Trigger Used in Example Mission State Machine

Trigger ID	Trigger Signal	State Transitions	Trigger Masked In Each User Defined Power State			
			STANDBY	ACTIVE	MCU ONLY	DEEP SLEEP / S2R
0	IMMEDIATE_SHUTDOWN (1)	From any state to SAFE RECOVERY				
1	MCU_POWER_ERROR (1)	From any state to SAFE RECOVERY				
2	ORDERLY_SHUTDOWN (1)	From any state to SAFE RECOVERY				
3	TRIGGER_FORCE_STANDBY	From any state to STANDBY or LP_STANDBY	Masked			
4	WD_ERROR	Perform warm reset of all power rails and return to ACTIVE	Masked		Masked	Masked
5	ESM_MCU_ERROR	Perform warm reset of all power rails and return to ACTIVE	Masked		Masked	Masked
7	WD_ERROR	Perform warm reset of all power rails and return to MCU ONLY	Masked	Masked		Masked
8	ESM_MCU_ERROR	Perform warm reset of all power rails and return to MCU ONLY	Masked	Masked		Masked
9	SOC_POWER_ERROR	ACTIVE to MCU ONLY	Masked		Masked	Masked
10	TRIGGER _I2C_1 (self-cleared)	Start RUNTIME_BIST	Masked			Masked
11	TRIGGER_I2C_2 (self-cleared)	Enable I2C CRC Function	Masked			Masked
12	TRIGGER_SU_ACTIVE	STANDBY to ACTIVE			Masked	Masked
13	TRIGGER_WKUP1	Any State to ACTIVE				
14	TRIGGER_A (NSLEEP2&NSLEEP1 = '11')	MCU ONLY or DEEP SLEEP/S2R to ACTIVE	Masked			
15	TRIGGER_SU_MCU_ONLY	STANDBY to MCU ONLY		Masked		Masked
16	TRIGGER_WKUP2	STANDBY or DEEP SLEEP/S2R to MCU ONLY		Masked		
17	TRIGGER_B (NSLEEP2&NSLEEP1 = '10')	ACTIVE or DEEP SLEEP/S2R to MCU ONLY	Masked			
18	TRIGGER_D or TRIGGER_C (NSLEEP2 = '0')	ACTIVE or MCU ONLY to DEEP SLEEP/S2R	Masked			Masked
19	TRIGGER_I2C_0 (self-cleared)	Any state to STANDBY	Masked			Masked
20	Always '1' (2)	STANDBY to SAFE RECOVERY	Mask	Masked	Masked	Masked
21	Not Used		Mask	Masked	Masked	Masked
22	Not Used		Mask	Masked	Masked	Masked
23	Not Used		Mask	Masked	Masked	Masked
24	Not Used		Mask	Masked	Masked	Masked
25	Not Used		Mask	Masked	Masked	Masked
26	Not Used		Mask	Masked	Masked	Masked
27	Not Used		Mask	Masked	Masked	Masked

表 7-12. List of Trigger Used in Example Mission State Machine (continued)

Trigger ID	Trigger Signal	State Transitions	Trigger Masked In Each User Defined Power State			
			STANDBY	ACTIVE	MCU ONLY	DEEP SLEEP / S2R
28-bit TRIG_MASK Value in Hex format:			0xFFE4FF8	0xFF181C0	0xFF01270	0xFFC9FF0

(1) This is an immediate trigger.
(2) When an error occurs, which requires the device to enter directly to the SAFE RECOVERY state, the mask for this trigger must be removed while all other non-immediate triggers are masked. The device exits the mission states and the FFSM state machine takes over control of the device power states once this trigger is executed.

7.4.1.2.4 Pre-Configured Hardware Transitions

There are some pre-defined trigger sources, such as on-requests and off-requests, that are constructed with the combination of hardware input signals and register bits settings. This section provides more detail to these pre-defined trigger sources and shows how they can be utilized in the PFSM configuration to initiate state to state transitions.

7.4.1.2.4.1 ON Requests

ON requests are used to switch on the device, which then transitions the device from the STANDBY or the LP_STANDBY to the state specified by STARTUP_DEST[1:0].

After the device arrives at the corresponding STARTUP_DEST[1:0] operation state, the MCU must setup the NSLEEP1 and NSLEEP2 signals accordingly before clearing the STARTUP_INT interrupt. Once the interrupt is cleared, the device stays or moves to the next state corresponding to the NSLEEP signals state assignment as specified in 表 7-16.

表 7-13 lists the available ON requests.

表 7-13. ON Requests

EVENT	MASKABLE	COMMENT	DEBOUNCE
ENABLE (pin)	Yes	Level sensitive	8 µs
First Supply Detection (FSD)	Yes	VCCA > VCCA_UV and FSD unmasked	N/A
WKUP1 or WKUP2 Detection	Yes	Edge sensitive	8 µs
Recovery from Immediate and Orderly Shutdown	No	Recover from system errors which caused immediate or orderly shutdown of the device	N/A

If one of the events listed in 表 7-13 occurs, then the event powers on the device unless one of the gating conditions listed in 表 7-14 is present.

表 7-14. ON Requests Gating Conditions

EVENT	MASKABLE	COMMENT
VCCA_OVP (event)	No	VCCA > VCCA_OVP Device stays in SAFE RECOVERY until VCCA < VCCA_OVP
VCCA_UVLO (event)	No	VCCA < VCCA_UVLO
VINT_OVP (event)	No	LDOVINT > 1.98 V
VINT_UVLO (event)	No	LDOVINT < 1.62 V
TSD (event)	No	Device stays in SAFE RECOVERY until temperature decreases below TWARN level

7.4.1.2.4.2 OFF Requests

An OFF request is used to orderly switch off the device. OFF requests initiate transition from any other mission state to the STANDBY state or the LP_STANDBY state depending on the setting of the LP_STANDBY_SEL bit. 表 7-15 lists the conditions to generate the OFF requests and the corresponding destination state.

Copyright © 2022 Texas Instruments Incorporated

表 7-15. OFF Requests

EVENT	DEBOUNCE	LP_STANDBY_SEL BIT SETTING	DESTINATION STATE
ENABLE (pin)	8 µs	LP_STANDBY_SEL = 0	STANDBY
		LP_STANDBY_SEL = 1	LP_STANDBY
I2C_TRIGGER_0	NA	LP_STANDBY_SEL = 0	STANDBY
		LP_STANDBY_SEL = 1	LP_STANDBY

Using the I2C_TRIGGER_0 bit as the OFF request enables the device to wake up from the STANDBY or the LP_STANDBY states through the detection of WKUPn pins. To enable this feature the device must set the I2C_TRIGGER_0 bit to '1' while the NSLEEPn signals are masked, and the ON request initialized by the ENABLE pin remains active (if the ENABLE pin is used). Also the interrupt bits ENABLE_INT, FSD_INT and the GPIOx_INT bits (for the GPIOx pins assigned as WKUP1 or WKUP2) must be cleared before setting the I2C_TRIGGER_0 bit to '1'.

7.4.1.2.4.3 NSLEEP1 and NSLEEP2 Functions

The SLEEP requests are activated through the assertion of nSLEEP1 or nSLEEP2 pins that are the secondary functions of the 10 GPIO pins. These pins can be selected through GPIO configuration using the GPIOx_SEL register bits. If the nSLEEP1 or nSLEEP2 pins are not available, the NSLEEP1B and NSLEEP2B register bits can be configured in place for their functions. The input of nSLEEP1 pin and the state of the NSLEEP1B register bit are combined to create the NSLEEP1 signal through an *OR* function. Similarly for the input of the nSLEEP2 pin and the NSLEEP2B register bit as they are combined to create the NSLEEP2 signal.

A 1 → 0 logic level transition of the NSLEEP signal generates a sleep request, while a 0 → 1 logic level transition reverses the sleep request in the example PFSM from 図 7-38. When a NSLEEPn signal transitions from 1 → 0, it generates a sleep request to go from a higher power state to a lower power state. When the signal transitions from 0 → 1, it reverses the sleep request and returns the device to the higher power state.

The NSLEEP1 signal is designed to control the SoC supply rails. The NSLEEP2 signal is designed to control the MCU supply rails. When NSLEEP1 signal changes from 1 → 0, depending on the state of NSLEEP2, the LP876242-Q1 device exits ACTIVE state and enters either the MCU ONLY or the S2R states. When NSLEEP2 signal changes from 1 → 0, the device enters the S2R state regardless the state of NSLEEP1.

When the NSLEEP2 input signal changes from 0 →1, the MCU supply rails are enabled and the device exits S2R state. Depending on the state of NSLEEP1 signal, the device enters either the MCU ONLY or the ACTIVE state. In order for the system to function correctly, the MCU rails must be enabled when the NSLEEP1 input signal changes from 0 →1, which enables the SOC supply rails. NSLEEP1 0 →1 transition is ignored if NSLEEP2 is 0.

The NSLEEPn_MASK bit can be used to mask the sleep request associated with the corresponding NSLEEPn signal. When the NSLEEPn_MASK = 1, the corresponding NSLEEPn signal is ignored. 表 7-16 shows how the combination of the NSLEEPn signals and NSLEEPn_MASK bits creates triggers A/B/C/D to the FSM to control the power state of the device.

The states of the resources during ACTIVE, SLEEP, and DEEP SLEEP/S2R states are defined in the BUCKn_CTRL registers. For each resource, a transition to the MCU ONLY or the DEEP SLEEP/S2R states is controlled by the FSM when the resource is associated to the SLEEP or DEEP SLEEP/S2R states.

表 7-16 shows the corresponding state assignment based on the state of the NSLEEPn and their corresponding mask signals using the example PFSM from 図 7-38.

表 7-16. NSLEEPn Transitions and Mission State Assignments

Current State	NSLEEP1	NSLEEP2	NSLEEP1 MASK	NSLEEP2 MASK	Trigger to FSM	Next State
DEEP SLEEP/S2R	0	0 → 1	0	0	TRIGGER B	MCU ONLY
DEEP SLEEP/S2R	0 → 1	0 → 1	0	0	TRIGGER A	ACTIVE
DEEP SLEEP/S2R	Don't care	0 → 1	1	0	TRIGGER A	ACTIVE

表 7-16. NSLEEPn Transitions and Mission State Assignments (continued)

Current State	NSLEEP1	NSLEEP2	NSLEEP1 MASK	NSLEEP2 MASK	Trigger to FSM	Next State
DEEP SLEEP/S2R or MCU ONLY	0 → 1	Don't care	0	1	TRIGGER A	ACTIVE
MCU ONLY	0 → 1	1	0	0	TRIGGER A	ACTIVE
MCU ONLY	0	1 → 0	0	0	TRIGGER D	DEEP SLEEP or S2R
MCU ONLY	Don't care	1 → 0	1	0	TRIGGER D	DEEP SLEEP or S2R
ACTIVE	1 → 0	1	0	0	TRIGGER B	MCU ONLY
ACTIVE	1 → 0	1 → 0	0	0	TRIGGER D	DEEP SLEEP or S2R
ACTIVE	Don't care	1 → 0	1	0	TRIGGER D	DEEP SLEEP or S2R
ACTIVE	1 → 0	Don't care	0	1	TRIGGER B	MCU ONLY

7.4.1.2.4.4 WKUP1 and WKUP2 Functions

The WKUP1 and WKUP2 functions are activated through the edge detection on all GPIO pins. Any one of these GPIO pins when configured as an input pin can be configured to wake up the device by setting GPIOn_SEL bit to select the WKUP1 or WKUP2 functions. In the example PFSM depicted in 図 7-38, when a GPIO pin is configured as a WKUP1 pin, a rising or falling edge detected at the input of this pin (configurable by the GPIOn_FALL_MASK and the GPIOn_RISE_MASK bits) wakes up the device to the ACTIVE state. Likewise if a GPIO pin is configured as a WKUP2 pin, a detected edge wakes up the device to the MCU ONLY state. If multiple edge detections of WKUP signals occur simultaneous, the device goes to the state in the following priority order:

1. ACTIVE
2. MCU ONLY

When a valid edge is detected at a WKUP pin, the nINT pin generates an interrupt to signal the MCU of the wake-up event, and the GPIOx_INT interrupt bit is set. The wake request remains active until the GPIOx_INT bit is cleared by the MCU. While the wake request is executing, the device does not react to sleep requests to enter a lower power state until the corresponding GPIOx_INT interrupt bit is cleared to cancel the wake request. After the wake request is canceled, the device returns to the state indicated by the NSLEEP1 and NSLEEP2 signals as shown in 表 7-16.

The WKUP1 and WKUP2 functions can be used in all Mission States and also in LP_STANDBY state.

7.4.1.3 Error Handling Operations

The FSM engine of the LP876242-Q1 device is designed to handle the following types of errors throughout the operation:

- Power Rail Output Error
- Boot BIST Error
- Runtime BIST Error
- Catastrophic Error
- Watchdog Error
- Error Signal Monitor (ESM) Error
- Warnings

7.4.1.3.1 Power Rail Output Error

A power rail output error occurs when an error condition is detected on the output rails of the device that are used to power the attached MCU or SoC. These errors include the following:

- Rails not reaching or maintaining within the power good voltage level threshold.
- A short condition that is detected at a regulator output.
- The load current that exceeds the forward current limit.

Copyright © 2022 Texas Instruments Incorporated

The BUCKx_GRP_SEL, VMONn_GRP_SEL and VCCA_GRP_SEL registers are used to configure the rail group for all of the Bucks and the voltage monitors that are available for external rails. The selectable rail groups are MCU rail group, SoC rail group, or OTHER rail group. The LP876242-Q1 device is designed to react differently when an error is detected from a power resource assigned to the different rail groups.

図 7-36 shows how the SOC_RAIL_TRIG[1:0], MCU_RAIL_TRIG[1:0], and OTHER_RAIL_TRIG[1:0] register bits are used as the *Immediate Shutdown Trigger Mask*, *Orderly Shutdown Trigger Mask*, *MCU Power Error Trigger Mask*, or the *SoC Power Error Trigger Mask*. The settings of these register bits determine the error handling sequence that the assigned groups of rails perform in case of an output error. The PFSM engine can be configured to execute the appropriate error handling sequence for the following error handling sequence options: *immediate shutdown*, *orderly shutdown*, *MCU power error*, or *SOCpower error*. For example, if an *immediate shutdown* sequence is assigned to the MCU rail group through the MCU_RAIL_TRIG[1:0] register bits, any failure detected in this group of rails causes the IMMEDIATE_SHUTDOWN trigger to be executed. This trigger is expected to start the immediate shutdown sequence and cause the device to enter the SAFE RECOVERY state. The device immediately resets the attached MCU and SoC by driving the nRSTOUT and nRSTOUT_SoC pins low. All of the power resources assigned to the MCU and SOC shut down immediately without a sequencing order. The nINT pin signals that an MCU_PWR_ERR_INT interrupt event has occurred and the EN_DRV pin is forced low. If the error is recoverable within the recovery time interval, the device increments the recovery count, returns to INIT state, and reattempts the power up sequence (if the recovery count has not exceeded the counter threshold). If the recovery count has already exceeded the threshold, the device stays in the SAFE RECOVERY state until VCCA voltage is below the VCCA_UVLO threshold and the device is power cycled.

The power resources assigned to the SoC rail group are typically assigned to the SOC power error handling sequence. In this PFSM example depicted in 図 7-38, when a power resource in this group is detected, the PFSM typically causes the device to execute the shutdown of all the resources assigned to the SoC rail group, and the device enters the MCU ONLY state. The device immediately resets the attached SoC by toggling the nRSTOUT_SoC pin. The reset output to the MCU and the resources assigned to the MCU rail group remain unchanged. The EN_DRV pin also remains unchanged, and the nINT pin signals that an SOC_PWR_ERR_INT interrupt event has occurred. To recover from the MCU_ONLY state after a SOC power error, the MCU software must set NSLEEP1 signal to '0' while NSLEEP2 signal remains '1'. This action signals LP876242-Q1 that MCU has acknowledged the SOC power error, and is ready to return to normal operation. MCU can then set the NSLEEP1 signal back to '1' for the device to return to ACTIVE state and reattempt the SoC power up. Refer to セクション 7.4.1.2.4.3 for information regarding the setting of the NSLEEP1 and NSLEEP2 signals.

The power resources used for peripheral devices in the system, for which no error-handling action is required, the rail mapping needs to be selected as "no group assigned".

7.4.1.3.2 Boot BIST Error

Boot BIST error occurs when the device is not able to pass the BOOT BIST during device power up. Every failure of the BOOT BIST attempt causes the recovery count to increment as the device enters the SAFE RECOVERY state. If the count value is smaller than the counter threshold, the device attempts to enter the INIT state again and reattempts the BOOT BIST until the recovery count reaches the maximum threshold. When this occurs, the device stays in the SAFE RECOVERY state until VCCA voltage is below the VCCA_UVLO threshold and the device is power cycled.

7.4.1.3.3 Runtime BIST Error

Runtime BIST error occurs when the device is not able to pass the Runtime BIST while the device is in an operation state. This error creates an immediate shutdown condition, that causes the device to execute the immediate shutdown sequence and enter the SAFE RECOVERY state. The device immediately resets the attached MCU and SoC by driving the nRSTOUT and nRSTOUT_SoC pins low. All of the power resources assigned to the MCU and SOC are immediately shut down. The EN_DRV pin is forced low, and the nINT pin is driven low to signal an interrupt event has occurred.

7.4.1.3.4 Catastrophic Error

Catastrophic errors are errors that affect multiple power resources such as errors detected in supply voltage, LDOVINT supply for control logic, errors on internal clock signals, device temperature passing the thermal shutdown threshold, error detected on the SPMI bus, or an error detected in the PFSM sequence.

Following errors are grouped as severe errors:

- VCCA > OVP threshold
- Junction temperature > immediate shutdown level
- Error in PFSM Sequence

For these above listed errors, depending on the setting of bits SEVERE_ERR_TRIG[1:0], an immediate or orderly shutdown condition is created. The PFSM executes the corresponding sequence for the IMMEDIATE_SHUTDOWN trigger or the ORDERLY_SHUTDOWN trigger and enters the SAFE RECOVERY state.

Following errors are grouped as moderate errors:

- Junction temperature > orderly shutdown level
- BIST failure
- CRC error in register map
- Recovery counter exceeding the threshold value
- Error on SPMI bus
- Readback error on nRSTOUT pin or nINT pin

For these above listed errors, depending on the setting of bits MODERATE_ERR_TRIG[1:0], an immediate or orderly shutdown condition is created. The PFSM executes the corresponding sequence for the IMMEDIATE_SHUTDOWN trigger or the ORDERLY_SHUTDOWN trigger and enters the SAFE RECOVERY state.

For following errors, the device performs an immediate shutdown and resets all internal logic circuits:

- VCCA < UVLO threshold
- Error on LDOVINT supply
- Errors on internal clock signals
- Unrecoverable CRC error in the SRAM memory of the PFSM

For all of the above listed errors, the device resets the attached MCU and SoC by driving the GPIO pins used as nRSTOUT and nRSTOUT_SoC pins low. All of the power resources assigned to the attached MCUand SOC are shut down. The nINT pin is driven low to signal an interrupt event has occurred, and the GPIO pins used as EN_DRV pin is forced low.

7.4.1.3.5 Watchdog (WDOG) Error

Watchdog (WD) describes details about the Watchdog (WDOG) errors detection mechanisms.

7.4.1.3.6 Error Signal Monitor (ESM) Error

There is one Error Signal Monitor (ESM) available for the LP876242-Q1 device, designed to detect and handle the error signal received from the attached MCU. The error detection mechanisms for the monitor is described in detail under Error Signal Monitor (ESM).

7.4.1.3.7 Warnings

Warning are non-catastrophic errors. When such an error occurs while the device is in the operating states, the device detects the error and handles the error through the interrupt handler. These are errors such as thermal warnings, I2C, or SPI communication errors, or power resource current limit detection while the output voltage still maintains within the power good threshold. When these errors occur, the nINT pin is driven low to signal an interrupt event has occurred. The device remains in the operation state and the state of the EN_DRV pin, the power resources, and the reset outputs remain unchanged.

The power resource current limit detection can, by setting bit EN_ILIM_FSM_CTRL=1, be configured such that it is handled as a Power Rail Output Error as described in セクション 7.4.1.3.1.

7.4.1.4 Device Start-up Timing

図 7-39 shows the timing diagram of the LP876242-Q1 after the first supply detection.

Copyright © 2022 Texas Instruments Incorporated

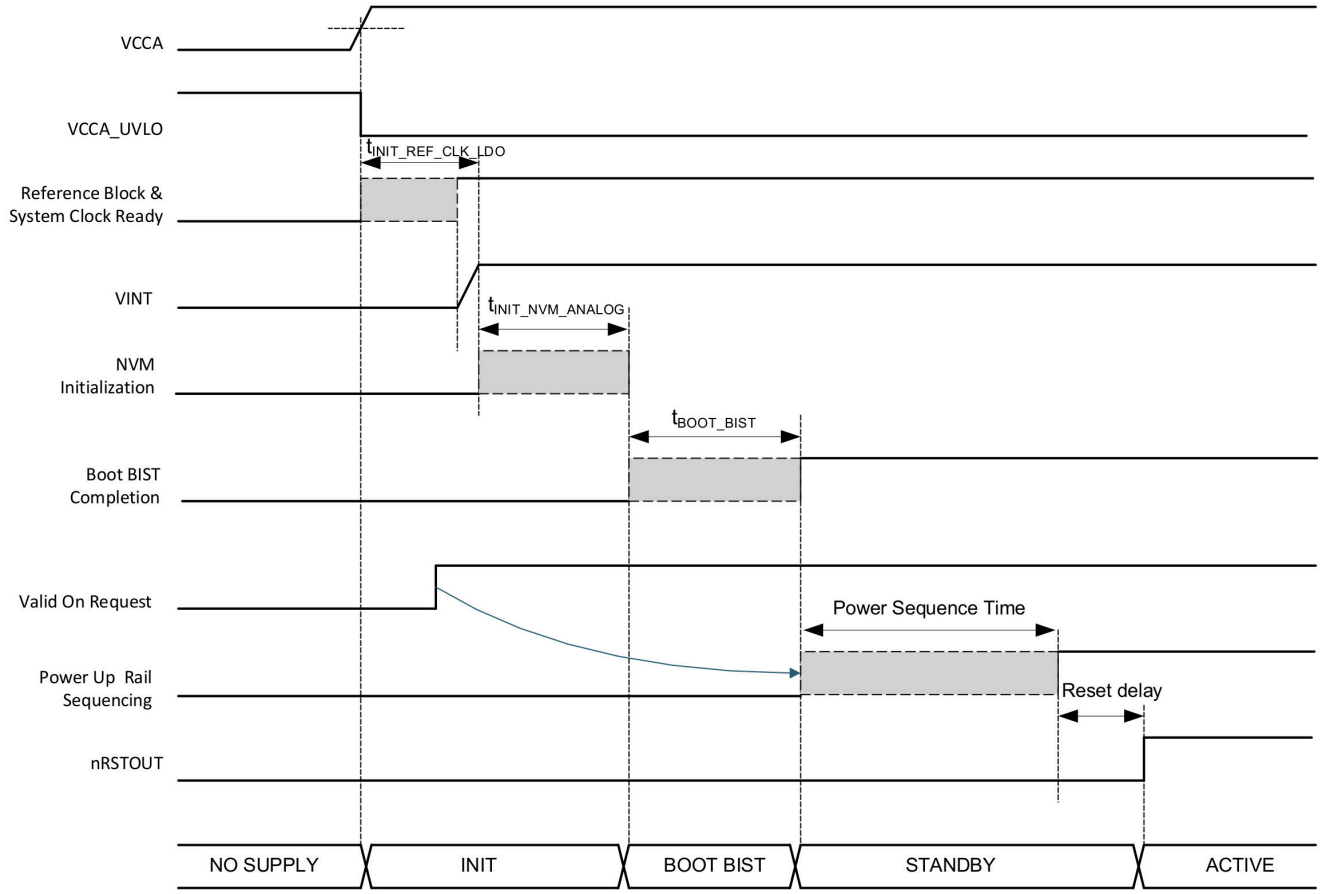

図 7-39. Device Start-up Timing Diagram

$t_{INIT_REF_CLK_LDO}$ is the start-up time for the reference block, LDOVINT and internal oscillator. $t_{INIT_NVM_ANALOG}$ is the time for the device to load the default values of the NVM configurable registers from the NVM memory, and the start-up time for the analog circuits in the device. Both $t_{INIT_REF_CLK_LDO}$ and $t_{INIT_NVM_ANALOG}$ are defined in the electrical characterization table.

t_{BOOT_BIST} is the sum of $t_{ABISTrun}$ and $t_{LBISTrun}$, which are defined in the electrical characterization tables.

The Power Sequence time is the total time for the device to complete the power up sequence. Please refer to セクション 7.4.1.5 for more details.

The reset delay time is a configurable wait time for the nRSTOUT and the nRSTOUT_SoC release after the power up sequence is completed.

7.4.1.5 Power Sequences

A power sequence is an automatic preconfigured sequence the LP876242-Q1 device applies to its resources, which include the states of the BUCKs, the VMON1 and VMON2 and the GPIO output signals. For a detailed description of the GPIOs signals, please refer to General-Purpose I/Os (GPIO Pins).

図 7-40 shows an example of a power up transition followed by a power down transition. The power up sequence is triggered through a valid on request, and the power down sequence is trigger by a valid off request. The resources controlled (for this example) are: BUCK3, BUCK2, REGEN1, SYNCCLKOUT, and nRSTOUT. The time between each resource enable and disable (TinstX) is also part of the preconfigured sequence definition.

A resource not assigned to any power sequence remains in off mode during the power-up sequence. The attached MCU or SoC can enable and configure this resource independently when the power-up sequence completes. Also the GPIO pin used as EN_DRV remains low during the power-up sequence. The attached MCU

or SoC can release the EN_DRV pin by setting the ENABLE_DRV bit (requires running watchdog, ESM started and no pending interrupt bits).

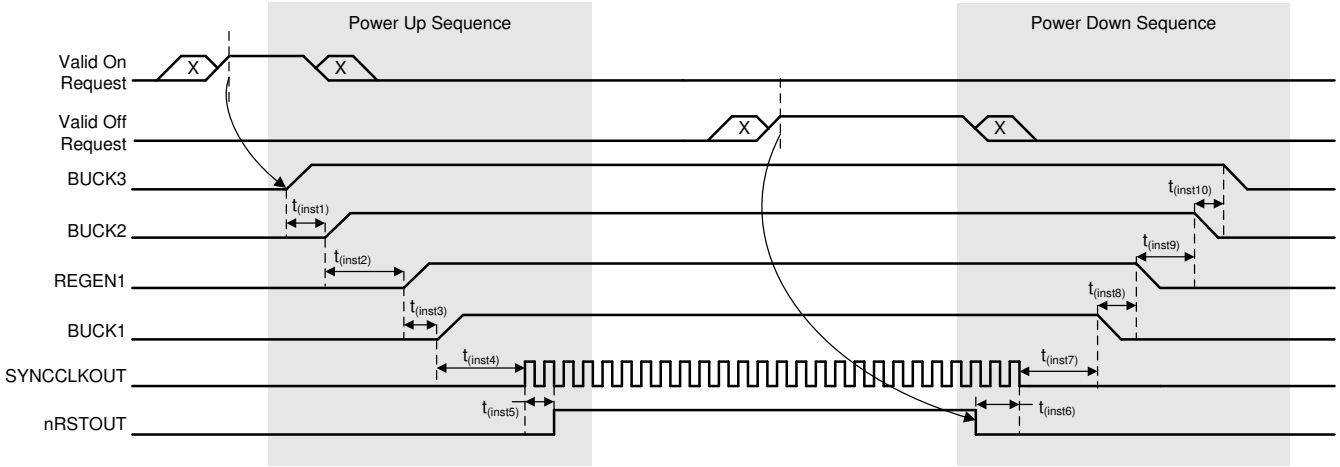

図 7-40. Power Sequence Example

As the power sequences of the LP876242-Q1 device are defined according to the processor requirements, the total time for the completion of the power sequence varies across various system definitions.

7.4.1.6 First Supply Detection

The LP876242-Q1 device can be configured to automatically start up from a first supply-detection (FSD) event detection. This feature is enabled by setting the FSD_MASK register bit to '0', and driving ENABLE pin active if ENABLE pin function is selected for GPIO. When the device is powered up from the NO SUPPLY state, the FSD detection is validated after the NVM default for this feature is loaded into the device memory.

When the FSD feature is enabled, the PMIC immediately powers up from the NO SUPPLY state to an operation state, configured by the STARTUP_DEST[1:0] bits when VCCA > VCCA_UV, while VCCA_UV gating is performed, and only when VCCA voltage monitoring is enabled (VCCA_VMON_EN = 1). After the device arrives the corresponding STARTUP_DEST[1:0] operation state, the MCU must setup the NSLEEP1 and NSLEEP2 signals accordingly before clearing the FSD_INT interrupt. Once the interrupt is cleared, the device either stays in the current state or moves to the destination state according to the state of the NSLEEP1 and NSLEEP2 signals as specified in 表 7-16.

Copyright © 2022 Texas Instruments Incorporated

7.4.2 Multi-PMIC Synchronization

A multi-PMIC synchronization scheme is implemented in the LP876242-Q1 device to synchronize the power state changes with other PMIC devices. This feature consolidates and simplifies the IO control signals required between the application processor or the microcontroller and multiple PMICs in the system. The control interface consists of an SPMI protocol that communicates the next power state information from the primary PMIC to up to 5 secondary PMICs, and receives feedback signal from the secondary PMICs to indicate any error condition or power state information. 図 7-41 is the block diagram of the power state synchronization scheme. The primary PMIC in this block diagram is responsible for broadcasting the synchronous system power state data, and processing the error feedback signals from the secondary PMICs. The primary PMIC is the *controller* device on the SPMI bus, and the secondary PMICs are the *target* devices on the SPMI bus.

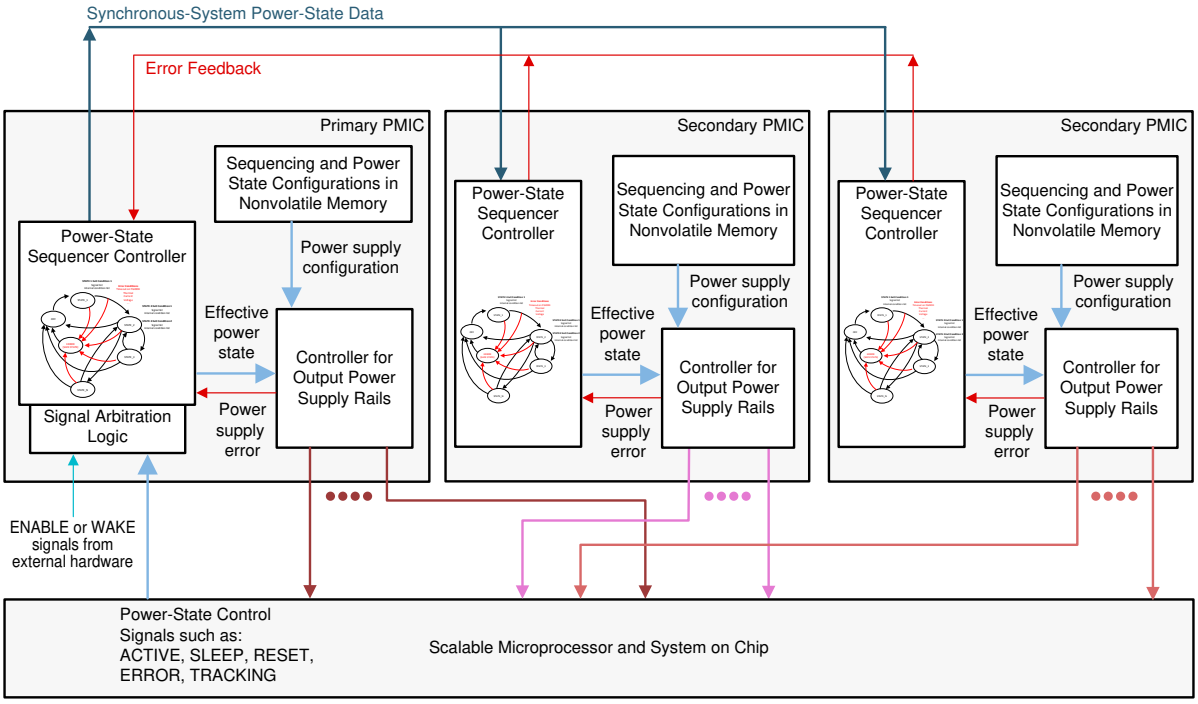

図 7-41. Multi-PMIC Power State Synchronization Block Diagram

In this scheme, each primary and secondary PMIC runs on its own system clock, and maintains its own register map. Each PMIC monitors its own activities and pulls down the open-drain output of nINT or PGOOD pin when errors are detected. The microprocessor must read the status bits from each PMIC device through the I2C or SPI interface to find out the source of the error that is reported.

図 7-42 illustrates the pin connections between the primary, the secondary, and the application processor or the System-on-Chip.

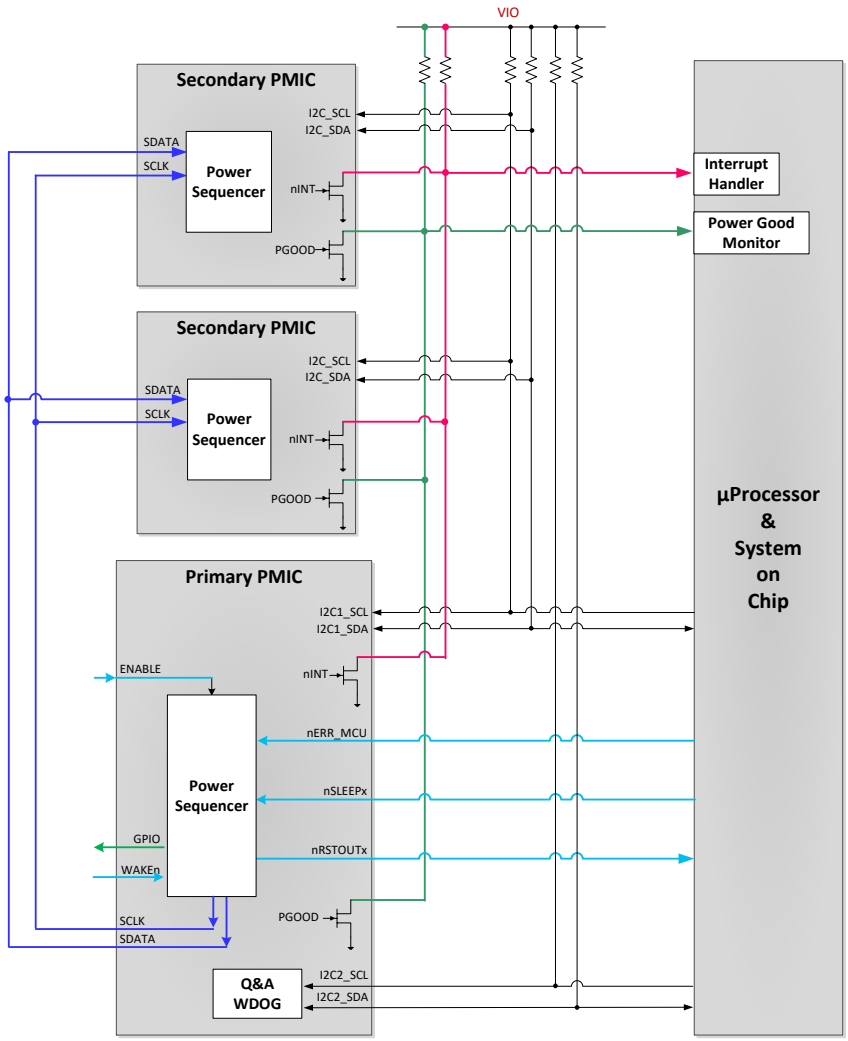

図 7-42. Multi-PMIC Pin Connections

The power sequencer of the multiple PMICs are synchronized at the beginning of each power up and power down sequence; a variation in the sequence timing, however, is still possible due to the ±5% clock accuracy of the independent system clocks on the primary and secondary PMICs. The worst-case sequence timing variation from different PMIC rails is up to ±10% of the target delay time. 図 7-43 illustrates the creation of this timing variation between PMICs.

Copyright © 2022 Texas Instruments Incorporated

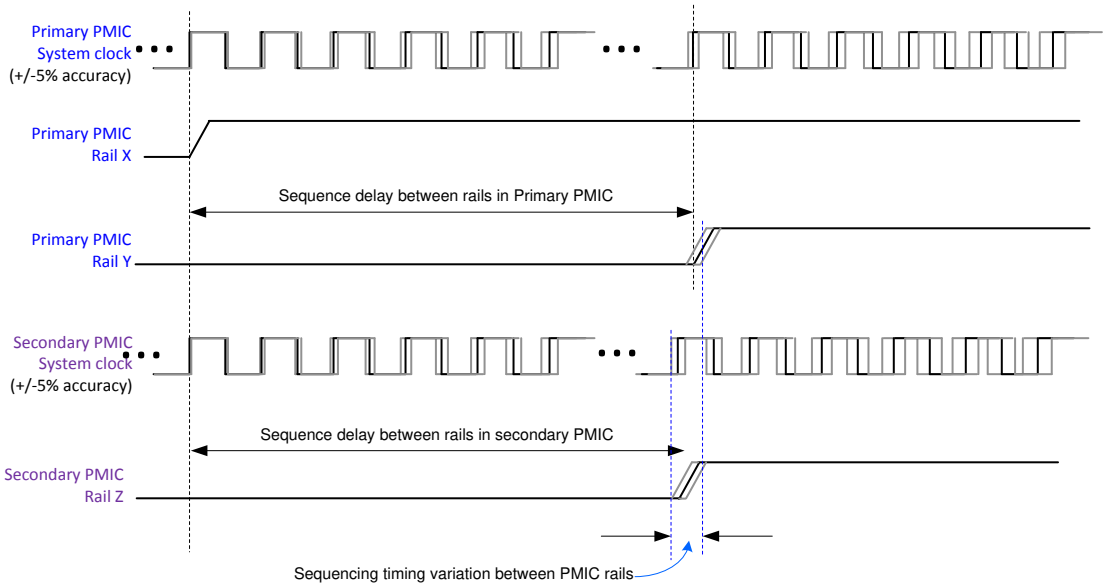

図 7-43. Multi-PMIC Rail Sequencing Timing Variation

7.4.2.1 SPMI Interface System Setup

An SPMI interface in the LP876242-Q1 device is utilized to communicate the power state transition across multiple PMICs in the system. The SPMI interface contains a *controller* block and a *target* block. There is only one PMIC, which is the primary PMIC, that acts as SPMI controller in any given system. As the SPMI controller it initiates SPMI interface BIST and executes periodic checking of the SPMI bus health.

The primary PMIC has a controller-ID (CID)= 1. The target block of SPMI interface in the primary PMIC device is activated as well, in order to receive SPMI communication messages from the secondary PMICs. The primary PMIC has a target-ID (TID) = 0101.

Each secondary PMIC on the SPMI network only has the target block of its SPMI interface enabled. There cannot be more than five secondary PMICs in the system. The target-IDs (TIDs) for the five secondary PMICs are:

- 1st target device: 0011
- 2nd target device: 1100
- 3rd target device: 1001
- 4th target device: 0110
- 5th target device: 1010

All devices in the SPMI network listen to the group target-ID (GTID): 1111. This address is used to communicate all power state transition information in broadcast mode to all connected devices on the SPMI bus.

7.4.2.2 Transmission Protocol and CRC

The communication between the devices on the network utilizes Extended Register Write command to GTID address *1111* with byte length of 2. Sequence format complies with MIPI SPMI 2.0 specification. First data frame carries the data payload of 5 bits and 3 filler bits.

Communication over the SPMI interface may contain information regarding the power state transition or the unique TID of one or more target devices. In the case of power state information, the data payload contains 5 bits of Trigger ID information and 3 trigger state bits. In the case of TID information, all 8 bits contain the TID of the target device.

Second data frame carries 8 bits of CRC information. CRC polynomial used is $X^8 + X^2 + X + 1$. CRC is calculated over the SPMI command frame, the address frame, and the first data frame (which contains the payload and excludes the parity bits in these three frames).

図 7-44 shows the data format of the SPMI Extended Register Write Command.

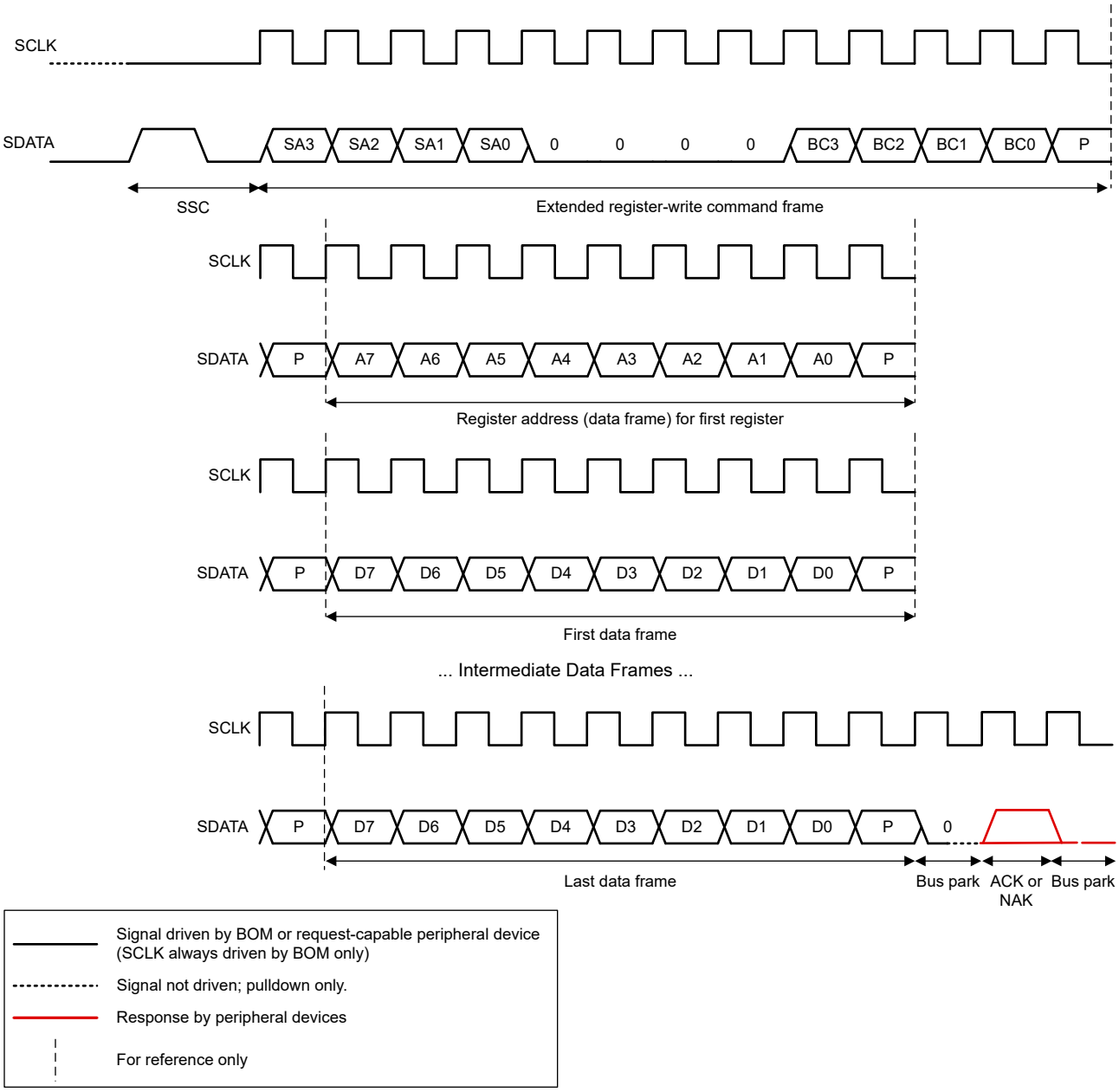

図 7-44. SPMI Extended Register Write Command

Copyright © 2022 Texas Instruments Incorporated

7.4.2.2.1 Operation with Transmission Errors

If the receiving device detects a parity or CRC error in the incoming sequence it responds with negative ACK/NACK per SPMI standard.

If the transmitting device sees NACK response, it tries to resend the message as many times as indicated by SPMI_RETRY_LIMIT register bits. After that it considers the SPMI bus inoperable, sets SPMI_ERR_INT interrupt and goes to the safe recovery state and executes an orderly shutdown. Bus arbitration requests do not count as failed attempts if a target device loses bus arbitration. SPMI_RETRY_LIMIT counter is reset after each successful transmission by the device.

If a target device has determined that SPMI does not work reliably it does not respond to any SPMI commands anymore until power-on-reset event has occurred. This "no-response" behavior is to prevent continued operation in a situation where SPMI is unreliable. If a target device does no longer respond to any SPMI command, the controller device on the SPMI bus detects a missing target device on the network during the periodic testing of SPMI bus. The target device then internally handles the SPMI error condition per error handling rules set for the device (in general executing an orderly shutdown). SPMI block signals to the device that SPMI bus error has occurred after the retry limit has been exceeded.

7.4.2.2.2 Transmitted Information

The SPMI bus is used to carry two types of information:

- PFSM Trigger ID between the SPMI controller and target devices
- TID from SPMI target devices to SPMI controller device

The SPMI controller device reads the TID of the target devices periodically to check the health of the interface. Exchanging Trigger IDs for the power state transition is sufficient to keep the PFSMs of all the devices on the SPMI network in synchronization. Device interrupts explain reason for the power state transitions.

7.4.2.3 SPMI Target Device Communication to SPMI Controller Device

An SPMI target device communicates to the SPMI controller device and any other SPMI target devices, only if there is an internal error that is not SPMI related. The target device initiates the error communication using Arbitration Request with A-bit as defined in the SPMI 2.0 specification. SPMI 2.0 protocol manages the situation with multiple target devices requesting error communication at the same time, by using the target arbitration process as described in SPMI 2.0 specification. Once the SPMI target device wins the arbitration using the A-bit protocol, it performs an Extended Register Write command to Group Target ID (GTID) address *1111* by using the protocol described in セクション 7.4.2.2 for communicating PFSM trigger ID.

7.4.2.3.1 Incomplete Communication from SPMI Target Device to SPMI Controller Device

In case the SPMI controller device detects an arbitration request on the SPMI interface, but the received sequence has an error or is incomplete, the SPMI controller device immediately performs the SPMI Built-In Self-Test (SPMI-BIST). If this SPMI-BIST fails, the SPMI controller device executes the error handling for the SPMI error. If the SPMI-BIST passes successfully, the SPMI controller device resumes normal operation.

7.4.2.4 SPMI-BIST Overview

The SPMI-BIST is performed during BIST state and regularly during runtime operation. 図 7-45 below illustrates how the SPMI-BIST operates during device power-up.

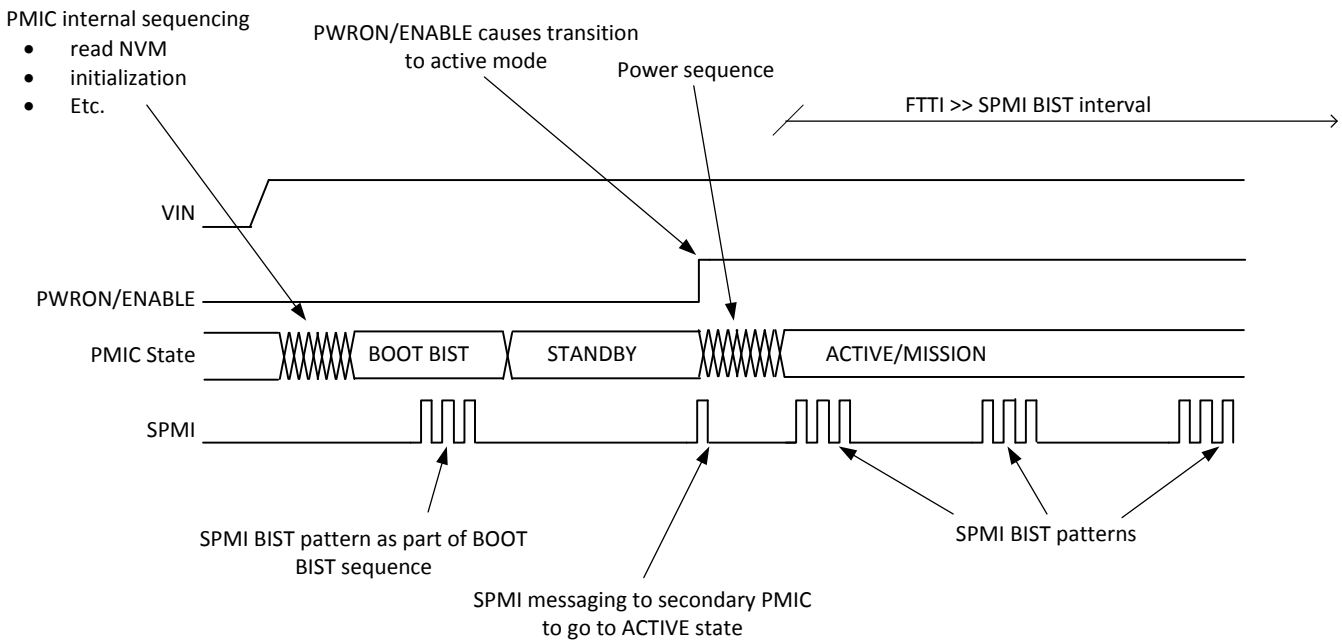

図 7-45. SPMI-BIST Operation

After the input power is detected and verified to be at the correct level, the LP876242-Q1 initializes itself by reading the NVM and performs all actions that are needed to prepare for operation . After this initialization, the LP876242-Q1 enters the BOOT BIST state, in which the internal logic performs a series of tests to verify that the LP876242-Q1 device is OK. As part of this test, the SPMI- BIST is performed. After it is completed successfully, the LP876242-Q1 device goes to the standby state and waits for further signals from the system to initiate the power-up sequence of the processor.

A valid on request initiates the processor power-up sequence. The controller device communicates this event through the SPMI bus to all of the target devices. After that, the power-up sequence is executed and LP876242-Q1 enters the configured mission state.

7.4.2.4.1 SPMI Bus during Boot BIST and RUNTIME BIST

During Boot BIST and RUNTIME BIST, both the Logic BIST (LBIST) on the SPMI logic and the SPMI-BIST are performed to check correct operation of the SPMI bus. The LBIST is performed first before the SPMI-BIST during BOOT BIST and RUNTIME BIST. The SPMI-BIST is implemented by reading TID from each target device on the SPMI bus into the controller device, and ensuring they are unique and match the expected amount of target devices. This process of checking the TID of each target device ensures that:

- All SPMI target devices are present in the system as expected
- The SPMI logic blocks are working on the SPMI controller device and all of the SPMI target devices
- The pins and wires on the ICs and PCB are in working order

The SPMI-BIST is initiated by the SPMI controller block in the primary PMIC by writing a request to all SPMI target device(s) (using GTID) to send their TIDs to the SPMI controller block of the primary PMIC. Upon receiving this command from the SPMI controller device, the SPMI target devices request SPMI bus arbitration using the SR-bit protocol. Upon winning the bus arbitration the SPMI target devices transmit their TID into the SPMI target block of the primary PMIC.

The SPMI controller block of the primary PMIC contains a list of all SPMI target device(s) on the SPMI bus and their TIDs in the register set. The SPMI controller block of the primary PMIC reads the TID from each SPMI target device and compares the result with the stored TID for the corresponding SPMI target device. The SPMI controller device has to ensure that every non-zero TID on its list is returned, in order to support use cases in which there are two or more identical SPMI target devices, with same TID, in the system. In these cases, it is mandatory that the expected number of the same TIDs is returned. If no identical PMICs are to be used, then a return of the same TID multiple times is an error due to incorrect assembly of identical PMICs onto the PCB. An

Copyright © 2022 Texas Instruments Incorporated

all-zero TID stored in the list of the primary PMIC indicates that there are no SPMI target device(s) present on the SPMI Bus.

7.4.2.4.2 Periodic Checking of the SPMI

The SPMI controller block in the primary PMIC executes the SPMI-BIST periodically while device is operating. The time-period after the SPMI-BIST is repeated according factory-configured settings during the device boot time, and after the device reaches mission states. The factory-configured settings of this SPMI-BIST time period must be the same for all PMICs on the same SPMI network. The SPMI target devices on the SPMI bus expect a request for sending its TID from the SPMI controller device within 1.5x the factory-configured period . This factor 1.5x provides enough margin for clock uncertainty between the SPMI controller device and the SPMI target device.

During mission state operation, the SPMI controller device expects the SPMI target devices to respond to the TID request within the factory-configured polling time-out period . In other words, from the polling start command each SPMI target device must respond within this factory-configured time interval.

During boot time or when the device enters Safe Recovery state, to prevent the SPMI controller device from polling the SPMI target devices too often while one or more of these recovering from a system error such as a thermal shutdown event, the device sets a longer timeout period that allows the SPMI target devices to respond to the SPMI controller device before he SPMI controller device reports an error.

If one or more devices on the SPMI bus cause a violating of the polling time-out period either during start-up or during normal operation, the SPMI controller block in the affected PMIC(s) sets a SPMI error trigger signal to the PFSM of the affected PMIC(s), causing a complete shutdown of the affected PMIC(s). As a result, the affected PMIC(s) no longer respond on the SPMI bus, which in turn is detected by the SPMI controller block off the non-affected PMICs on the SPMI bus. The SPMI controller block in these PMICs sets an SPMI error to the PFSM in these PMICs, causing a complete shutdown of these PMICs. Therefore, all PMICs are finally shutdown if one or more devices on the SPMI bus cause a violating of the polling time-out period .

7.4.2.4.3 SPMI Message Priorities

The SPMI Bus uses the protocol priority levels listed in 表 7-17 for each type of communication message.

表 7-17. SPMI Message Types and Priorities

SPMI protocol priority level	Name of priority level in SPMI standard	Message types
Highest	A-bit arbitration	State transition messages from target device(s) to controller device
	priority arbitration	State transition messages from controller device to target device(s)
	SR-bit arbitration	target device TID to controller device
Lowest	secondary arbitration	Controller device request of TIDs from target device(s)

7.5 Control Interfaces

The device has two, exclusive selectable (from factory settings) interfaces. Please refer to the User's Guide of the orderable part number which option has been selected. The first selection is up to two high-speed I^2C interfaces. The second selection is one SPI interface. The SPI and I2C1 interfaces are used to fully control and configure the device, and have access to all of the configuration registers and Watchdog registers. During normal operating mode, when the I^2C configuration is selected, and the GPIO2 and GPIO3 pins are configured as the SCL_I2C2 and SDA_I2C2 pins, the I2C2 interface becomes the dedicated interface for the Q&A Watchdog communication channel, while I2C1 interface no longer has access to the Watchdog registers. .

7.5.1 CRC Calculation for I²C and SPI Interface Protocols

For safety applications, the LP876242-Q1 supports read and write protocols with embedded CRC data fields. The LP876242-Q1 uses a standard CRC-8 polynomial to calculate the checksum value: $X^8 + X^2 + X + 1$. The CRC algorithm details are as follows:

- Initial value for the remainder is all 1s
- Big-endian bit stream order
- Result inversion is enabled

For I²C Interface, the LP876242-Q1 uses the above mentioned CRC-8 polynomial to calculate the checksum value on every bit except the ACK and NACK bits it receives from the MCU during a write protocol. The LP876242-Q1 compares this calculated checksum with the R_CRC checksum value that it receives from the MCU. The LP876242-Q1 also uses the above mentioned CRC-8 polynomial to calculate the T_CRC checksum value during a read protocol. This T_CRC checksum value is based on every bit that the LP876242-Q1 receives, except the ACK and NACK bits and except the repeated I2C_ID bits, and the data that the LP876242-Q1 transmits to the MCU during a read protocol. The MCU must use this same CRC-8 polynomial to calculate the checksum value based on the bits that the MCU receives from the LP876242-Q1. The MCU must compare this calculated checksum with the T_CRC checksum value that it receives from the LP876242-Q1.

For the SPI interface, the LP876242-Q1 uses the above mentioned CRC-8 polynomial to calculate the checksum value on every bit it receives from the MCU during a write protocol. The LP876242-Q1 compares this calculated checksum with the R_CRC checksum value, that it receives from the MCU. During a read protocol, the device also uses the above mentioned CRC-8 polynomial to calculate the T_CRC checksum value based on the first 16 bits sent by the MCU, and the next 8 bits the LP876242-Q1 transmits to the MCU. The MCU must use this same CRC-8 polynomial to calculate the checksum value based on the bits which the MCU sends to and receives from the LP876242-Q1, and compare it with the T_CRC checksum value that it receives from the LP876242-Q1.

図 7-46 and 図 7-47 are examples for the 8-bit R_CRC and the T_CRC calculation from 16-bit databus.

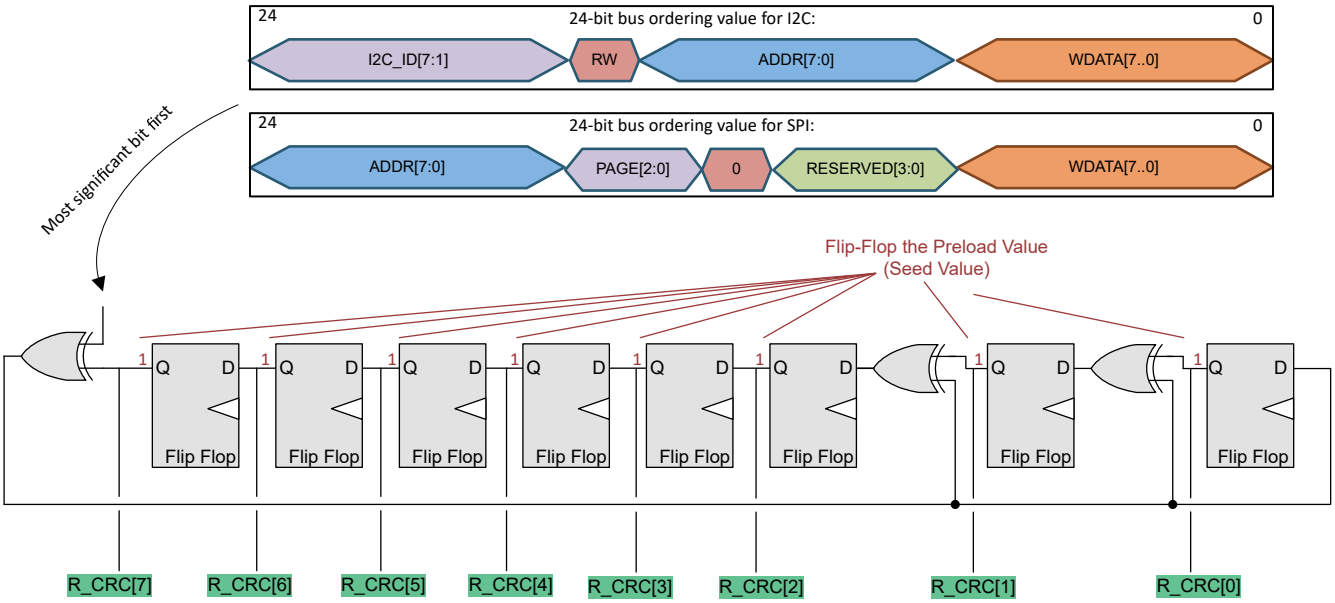

図 7-46. Calculation of 8-Bit CRC on Received Data (R_CRC)

Copyright © 2022 Texas Instruments Incorporated

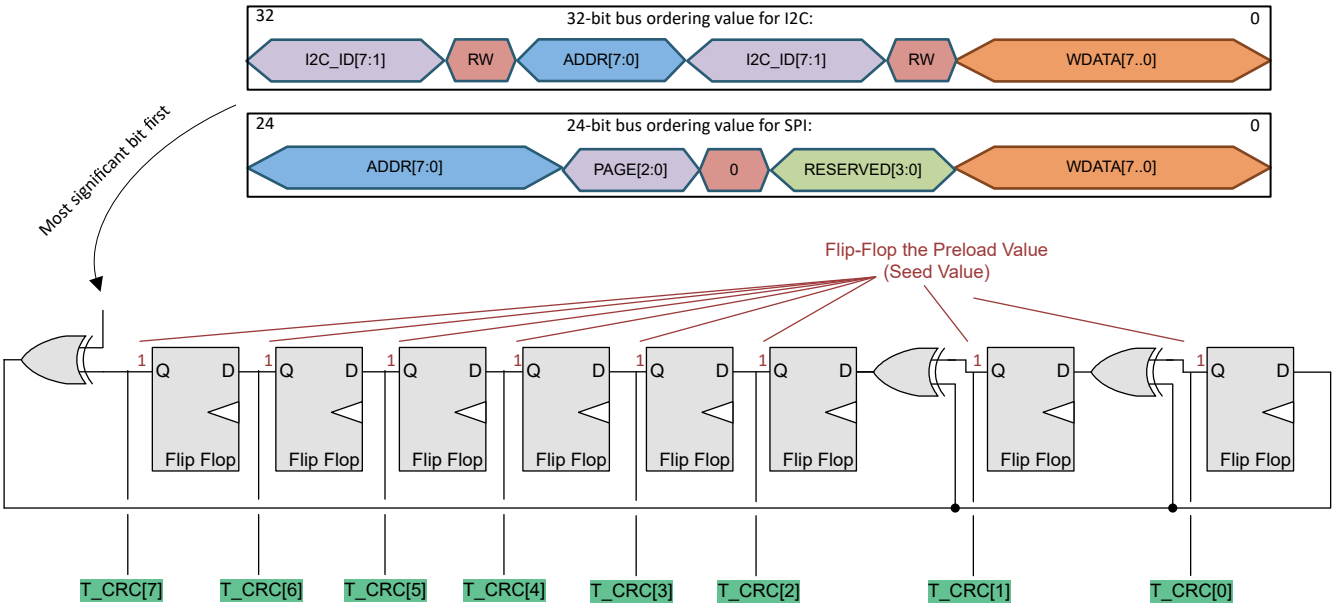

図 7-47. Calculation of 8-Bit CRC on Transmitted Data (T_CRC)

7.5.2 I²C-Compatible Interface

The default I²C1 7-bit device address of the LP876242-Q1 device is set to a binary value that is described in the User's Guide of the orderable part number of the LP876242-Q1 PMIC, while the two least-significant bits can be changed for alternative page selection listed under セクション 7.6.1. The default 7-bit device address for the I²C2 interface, for accessing the watchdog configuration registers and for operating the watchdog in Q&A mode, is described in the User's Guide of the orderable part number of the LP876242-Q1 PMIC.

The I²C-compatible synchronous serial interface provides access to the configurable functions and registers on the device. This protocol uses a two-wire interface for bidirectional communications between the devices connected to the bus. The two interface lines are the serial data line (SDA), and the serial clock line (SCL). Every device on the bus is assigned a unique address and acts as either a controller or a target depending on whether it generates or receives the serial clock SCL. The SCL and SDA lines must each have a pullup resistor placed somewhere on the line and remain HIGH even when the bus is idle. The device supports standard mode (100 kHz), fast mode (400 kHz), and fast mode plus (1 MHz) when VIO is 3.3 V or 1.8 V, and high-speed mode (3.4 MHz) only when VIO is 1.8 V.

7.5.2.1 Data Validity

The data on the SDA line must be stable during the HIGH period of the clock signal (SCL). In other words, the state of the data line can only be changed when clock signal is LOW.

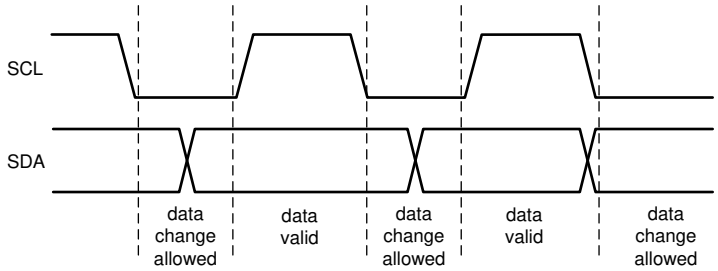

図 7-48. Data Validity Diagram

7.5.2.2 Start and Stop Conditions

The device is controlled through an I²C-compatible interface. START and STOP conditions classify the beginning and end of the I²C session. A START condition is defined as the SDA signal going from HIGH to LOW while the SCL signal is HIGH. A STOP condition is defined as the SDA signal going from LOW to HIGH while the SCL signal is HIGH. The I²C controller device device always generates the START and STOP conditions.

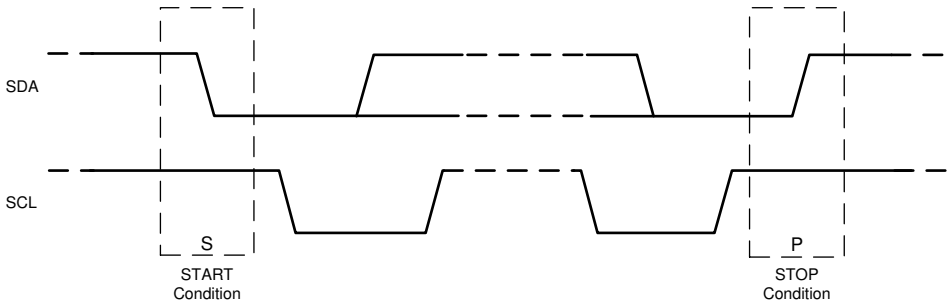

図 7-49. Start and Stop Sequences

The I²C bus is considered busy after a START condition and free after a STOP condition. The I²C controller device can generate repeated START conditions during data transmission. A START and a repeated START condition are equivalent function-wise. 図 7-50 shows the SDA and SCL signal timing for the I²C-compatible bus. For timing values, see the *Specification* section.

Copyright © 2022 Texas Instruments Incorporated

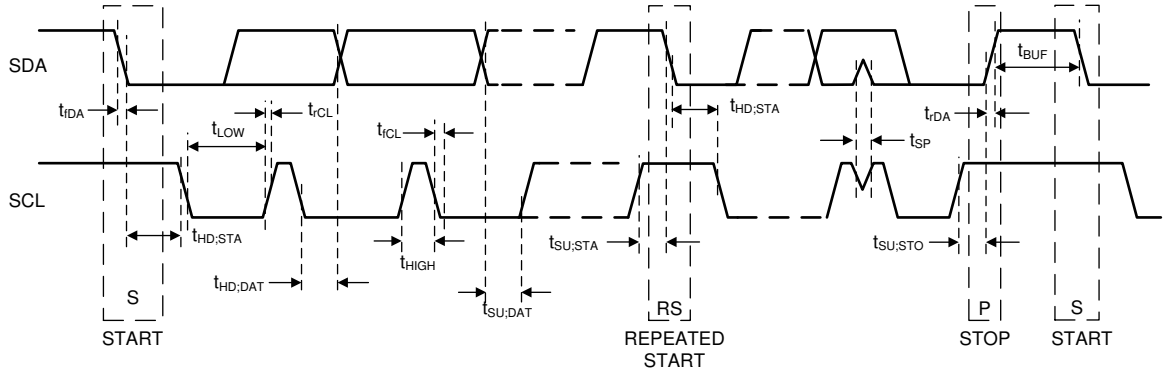

図 7-50. I²C-Compatible Timing

7.5.2.3 Transferring Data

Every byte put on the SDA line must be eight bits long, with the most significant bit (MSB) being transferred first. Each byte of data has to be followed by an acknowledge bit. The acknowledge related clock pulse is generated by the controller device. The controller device releases the SDA line (HIGH) during the acknowledge clock pulse. The device pulls down the SDA line during the 9th clock pulse, signifying an acknowledge. The device generates an acknowledge after each byte has been received.

There is one exception to the *acknowledge after every byte* rule. When the controller device is the receiver, it must indicate to the transmitter an end of data by not-acknowledging (*negative acknowledge*) the last byte clocked out of the target device. This *negative acknowledge* still includes the acknowledge clock pulse (generated by the controller device), but the SDA line is not pulled down.

After the START condition, the bus controller device sends a chip address. This address is seven bits long followed by an eighth bit which is a data direction bit (READ or WRITE). For the eighth bit, a 0 indicates a WRITE and a 1 indicates a READ. The second byte selects the register to which the data is written. The third byte contains data to write to the selected register. 図 7-51 shows an example bit format of device address 110000-Bin = 60Hex.

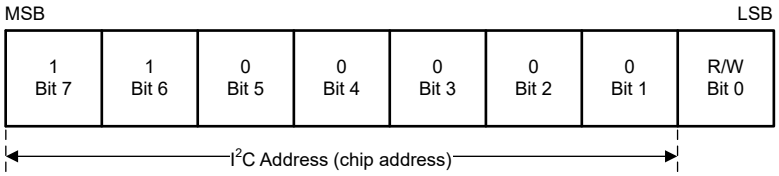

図 7-51. Example Device Address

For safety applications, the device supports read and write protocols with embedded CRC data fields. In a write cycle, the I²C controller device (i.e. the MCU) must provide the 8-bit CRC value after sending the write data bits and receiving the ACK from the target (i.e. the LP876242-Q1 PMIC). The CRC value must be calculated from every bit included in the write protocol except the ACK bits from the target. See CRC Calculation for I2C and SPI Interface Protocols. In a read cycle, the I²C target must provide the 8-bit CRC value after sending the read data bits and the ACK bit, and expect to receive the NACK from the controller at the end of the protocol. The CRC value must be calculated from every bit included in the read protocol except the ACK and NACK bits. See CRC Calculation for I2C and SPI Interface Protocols.

注

If I2C CRC is enabled in the device and an I2C write without R_CRC bits is done, the device does not process the write request. The device does not set any interrupt bit and does not pull the nINT pin low.

The embedded CRC field can be enabled or disabled from the protocol by setting the register bit to '1' - enabled, '0' - disabled. The default of this bit is configurable through the NVM.

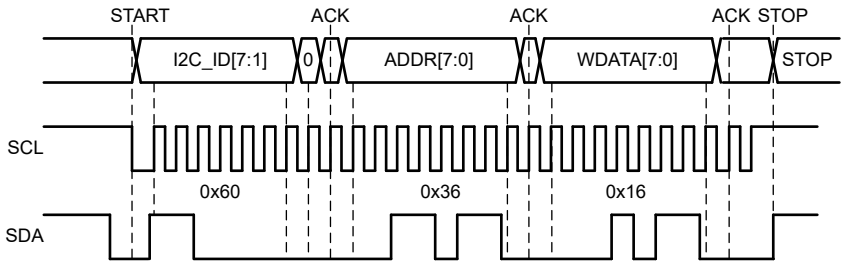

図 7-52. I²C Write Cycle without CRC

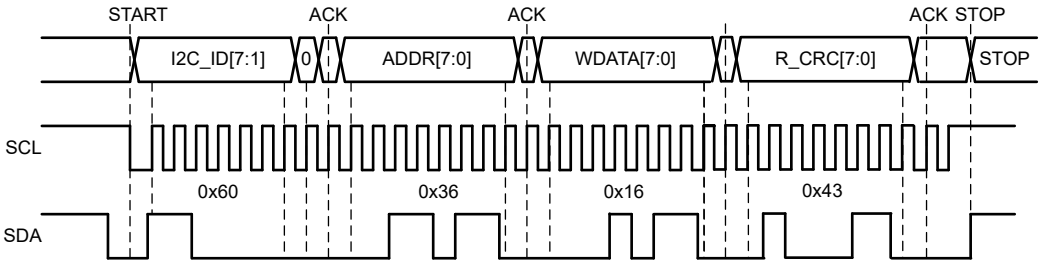

The I²C controller device device (i.e. the MCU) provides R_CRC[7:0], which is calculated from the I2C_ID, R/W, ADDR, and the WDATA bits (24 bits). See CRC Calculation for I2C and SPI Interface Protocols.

図 7-53. I²C Write Cycle with CRC

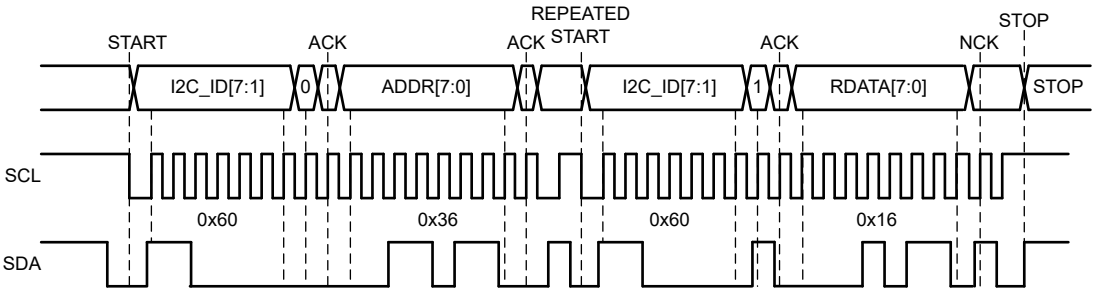

When READ function is to be accomplished, a WRITE function must precede the READ function as shown above.

図 7-54. I²C Read Cycle without CRC

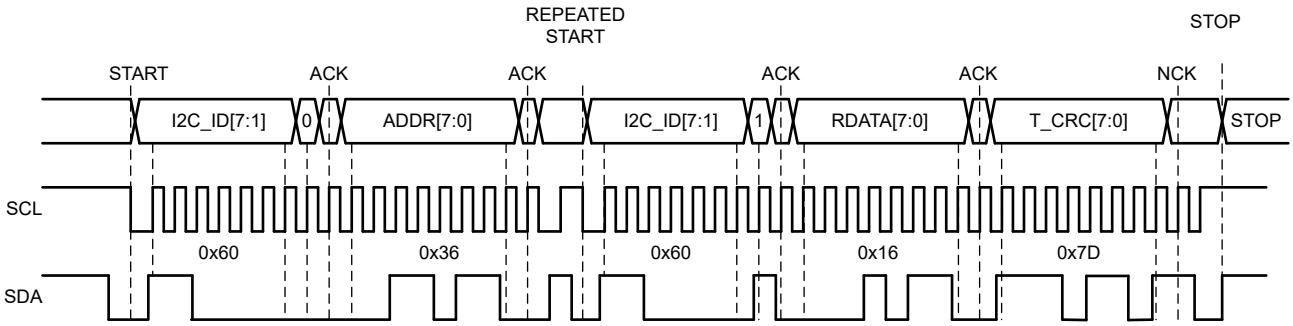

The I²C target device (i.e. the LP876242-Q1) provides T_CRC[7:0], which is calculated from the I2C_ID, R/W, ADDR, I2C_ID, R/W, and the RDATA bits (32 bits). See CRC Calculation for I2C and SPI Interface Protocols.

図 7-55. I²C READ Cycle with CRC

7.5.2.4 Auto-Increment Feature

The auto-increment feature allows writing several consecutive registers within one transmission. Every time an 8-bit word is sent to the device, the internal address index counter is incremented by one and the next register is

Copyright © 2022 Texas Instruments Incorporated

written. 表 7-18 lists the writing sequence to two consecutive registers. Note that auto increment feature does not support CRC protocol.

表 7-18. Auto-Increment Example

ACTION	START	DEVICE ADDRESS = 0x60	WRITE		REGISTER ADDRESS		DATA		DATA		STOP
PMIC device				ACK		ACK		ACK		ACK	

7.5.3 Serial Peripheral Interface (SPI)

The device supports SPI serial-bus interface and it operates as a peripheral device. The MCU in the system acts as the controller device. A single read and write transmission consists of 24-bit write and read cycles (32-bit if CRC is enabled) in the following order:

- Bits 1-8: ADDR[7:0], Register address
- Bits 9-11: PAGE[2:0], Page address for register
- Bit 12: Read/Write definition, 0 = WRITE, 1 = READ.
- Bits 13-16: RESERVED[4:0], Reserved, use all zeros.
- For Write: Bits 17-24: WDATA[7:0], write data
- For Write with CRC enabled: Bits 25-32: R_CRC[7:0], CRC error code calculated from bits 1-24 sent by the controller device (i.e. the MCU). See セクション 7.5.1.
- For Read: Bits 17-24: RDATA[7:0], read data
- For Read with CRC enabled: Bits 25-32: T_CRC[7:0], CRC error code calculated from bits 1-16 sent by the controller device (i.e. the MCU), and bits 17-24, sent by the peripheral device (i.e. the LP876242-Q1). See セクション 7.5.1.

In parallel with ADDR[7:0], PAGE[2:0], Read/Write definition and RESERVED[3:0] bits the device sends 16-bit interrupt status using SDO_SPI pin in the following order:

- Bit 1: always 0
- Bits 2-8: status of several interrupts and EN_DRV pin
- Bit 9: always 1
- Bits 10-16: status of several interrupts and EN_DRV pin, with opposite polarity

The status signals are in INT_SPI_STATUS register:

- Bit 8: always 0
- Bit 7: COMM_ADR_ERR_SWINT
- Bit 6: COMM_CRC_ERR_SWINT
- Bit 5: COMM_FRM_ERR_SWINT
- Bit 4: ESM_MCU_PIN_SWINT
- Bit 3: TWARN_SWINT
- Bit 2: WD_SWINT
- Bit 1: EN_DRV_STAT

Please refer to the bit descriptions of the INT_SPI_STATUS register in Register Map for the needed conditions in order to have an error-indication through these status bits.

EN_DRV_STAT bit is showing the live state of the EN_DRV pin, whereas all other status bits are latched in the same way as interrupts indicated with nINT pin. The latched status bits in INT_SPI_STATUS register are cleared by writing 1 to the latched bit. Bits 10-16 are sent for redundancy for bits 2-8 with opposite polarity. Bits 10-16 are always correlating with bits 2-8 and do not change during communication even when the status signal changes.

The embedded CRC filed can be enabled or disabled from the protocol by setting the I2C1_SPI_CRC_EN register bit to '1' - enabled, '0' - disabled. The default of this bit is configurable through the NVM.

The SDO_SPI output is in a high-impedance state when the CS_SPI pin is high. When the CS_SPI pin is low, the SDO_SPI output is always driven low except when the RDATA or SCRC bits are sent. When the RDATA or SCRC bits are sent, the SDO_SPI output is driven accordingly.

The address, page, data, and CRC are transmitted MSB first. The chip-select signal (CS_SPI) must be low during the cycle transmission. The CS_SPI signal resets the interface when it is high, and must be taken high between successive cycles. Data is clocked in on the rising edge of the SCK_SPI clock signal and it is clocked out on the falling edge of SCK_SPI clock signal.

The *SPI Timing* diagram shows the timing information for these signals.

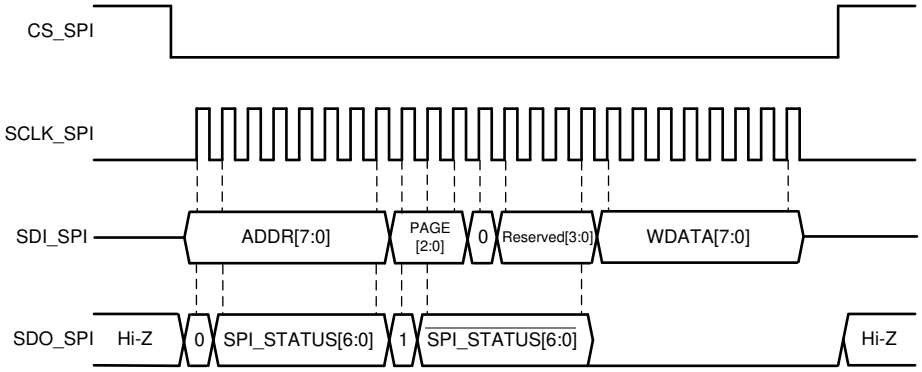

図 7-56. SPI Write Cycle

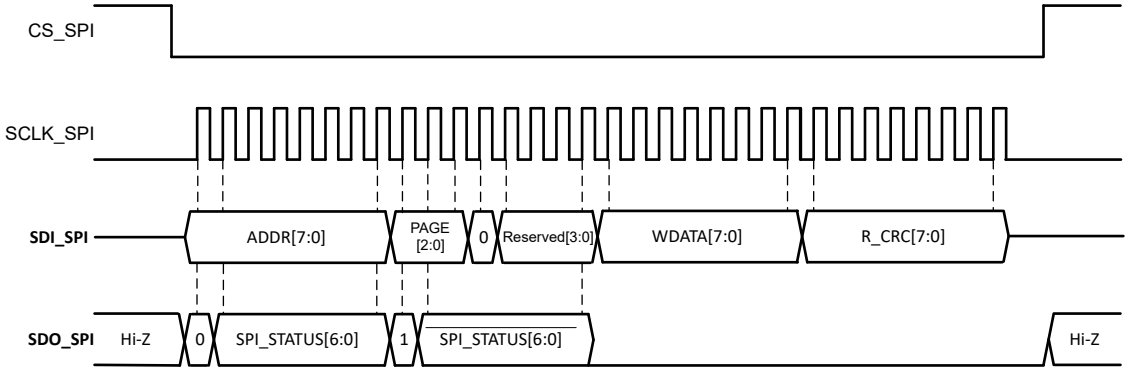

図 7-57. SPI Write Cycle with CRC

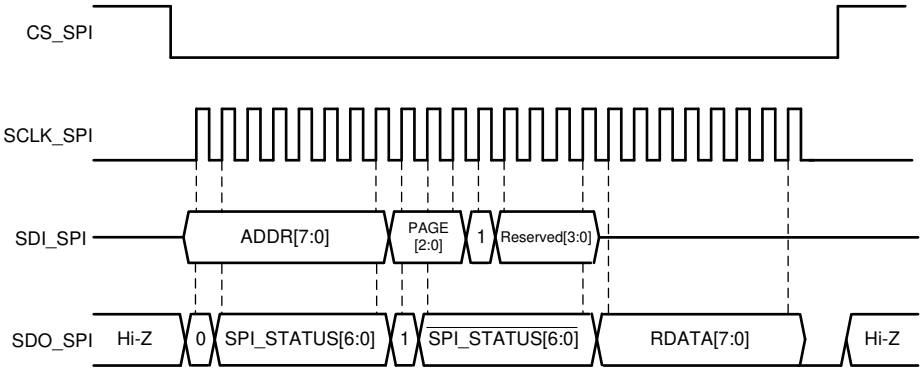

図 7-58. SPI Read Cycle

Copyright © 2022 Texas Instruments Incorporated

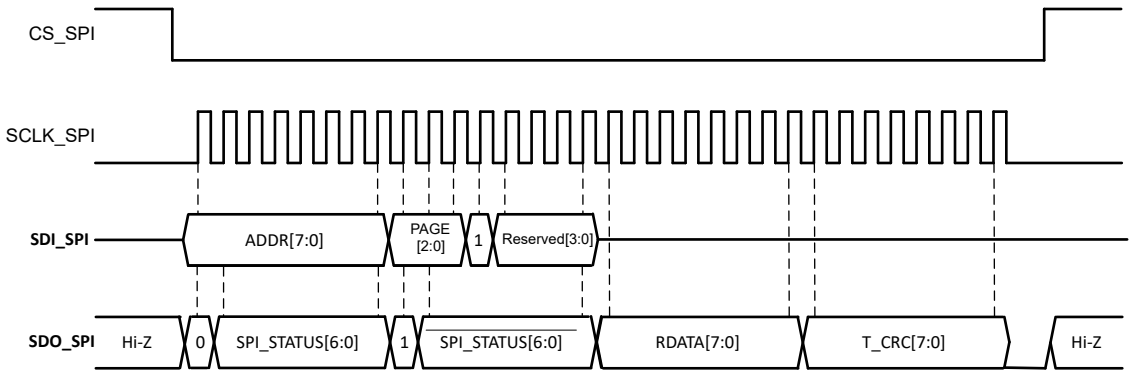

図 7-59. SPI Read Cycle with CRC

注

Due to a digital control erratum in the device, the LP876242-Q1 pulls the nINT pin low and sets interrupt bit COMM_FRM_ERR_INT if the pin CS_SPI is low during device power-up and goes high after completion of the device power-up sequence. After system start-up, the MCU must clear this COMM_FRM_ERR_INT bit such that the LP876242-Q1 can release the nINT pin.

7.6 NVM Configurable Registers

7.6.1 Register Page Partitioning

The registers in the LP876242-Q1 device are organized into five internal pages. Each page represents a different type of register. The below list shows the pages with their register types:

- Page 0: User Registers
- Page 1: NVM Control, Configuration, and Test Registers
- Page 2: Trim Registers
- Page 3: SRAM for PFSM Registers
- Page 4: Watchdog Registers

注

When I^{2}C Interfaces are used, each of the above listed register pages has its own 6-bit I^{2}C device address. In order to address Page 0 to 3, the two LSBs if the pre-configured I2C1_ID are replaced with 00 for Page 0, 01 for Page 1, 10 for Page 2 and 11 for Page 3. As an example, if I2C1_ID=0x26 (**01001**10b) , Page 0 to 3 have following addresses:

- Page 0: **01001**00
- Page 1: **01001**01
- Page 2: **01001**10
- Page 3: **01001**11

For Page 4 the I^{2}C device address is according register bits I2C2_ID. Therefore, in case both I^{2}C1 and I^{2}C2 Interfaces are used, each LP876242-Q1 device occupies four I^{2}C device addresses (for Page 0, Page 1, Page 2 and Page 3) on the I^{2}C1 bus and one I^{2}C device address (for Page 4) on the I^{2}C2 bus. And in case only I^{2}C1 Interfaces is used, each LP876242-Q1 device occupies five I^{2}C device addresses (for Page 0, Page 1, Page 2, Page 3 and Page 4) on the I^{2}C1 bus. In case multiple devices are used on a common I^{2}C bus, care must be taken to avoid overlapping I^{2}C device addresses.

注

When SPI Interface is used, the above listed register pages are addresses with the PAGE[2:0] bits: 0x0 addresses Page 0, 0x1 addresses Page 1, 0x2 addresses Page 2, 0x3 addresses Page 3

7.6.2 CRC Protection for Configuration, Control, and Test Registers

The LP876242-Q1 device includes a static CRC-16 engine to protect all the static registers of the device. Static registers are registers in Page 1, 2, and 3, with values that do not change once loaded from NVM. The CRC-16 engine continuously checks the control registers on the device. The expected CRC-16 value is stored in the NVM. When the CRC-16 engine detects a mismatch between the calculated and expected CRC-16 values, the interrupt bit REG_CRC_ERR_INT is set and the device forces an orderly shutdown sequence to return to the SAFE RECOVERY state. The device NVM control, configuration, and test registers in page 1 are protected against read or write access when the device is in normal functional mode. .

The CRC-16 engine uses a standard CRC-16 polynomial to calculate the internal known-good checksum-value, which is $X^{16} + X^{14} + X^{13} + X^{12} + X^{10} + X^{8} + X^{6} + X^{4} + X^{3} + X + 1$.

The initial value for the remainder of the polynomial is all 1s and is in big-endian bit-stream order. The inversion of the calculated result is enabled.

注

The CRC-16 engine assumes a default value of '0' for all undefined or reserved bits in all control registers. Therefore, the software MUST NOT write the value of '1' to any of these undefined or reserved bits. If the value of '1 is written to any undefined or reserved bit of a writable register, the CRC-16 engine detects a mismatch between the calculated and expected CRC-16 values, and hence the interrupt bit REG_CRC_ERR_INT is set and the device forces an orderly shutdown sequence to return to the SAFE RECOVERY state.

7.6.3 CRC Protection for User Registers

A dynamic CRC-8 engine exists to protect registers that have values that can change during operation. These are registers in Page 1 and 4. When writes occur to these pages, the dynamic CRC-8 is checked, computed, and updated. Continuously during operation the CRC-8 are evaluated and verified in a round-robin fashion.

The CRC-8 engine utilizes the Polynomial(0xA6) = $X^{8} + X^{6} + X^{3} + X^{2} + 1$, which provides a H4 hamming distance.

注

If a RESERVED bit in a R/W configuration register gets set to 1h through a I2C/SPI write, the LP876242-Q1 detects a CRC error in the register map. Therefore, it is important that system software involved in the I2C/SPI write-access to the LP876242-Q1 keeps all RESERVED bits (i.e. all bits with the word RESERVED in the Register Field Description tables in the Register Map section at 0h.

7.6.4 Register Write Protection

For safety application, in order to prevent unintentional writes to the control registers, the LP876242-Q1 device implements locking and unlocking mechanisms to many of its configuration/control registers described in the following subsections.

7.6.4.1 ESM and Watchdog Configuration Registers

The configuration registers for the watchdog and the ESM are locked when their monitoring functions are in operation. The locking mechanism and the list of the locked watchdog register is described under セクション 7.3.8.2. The locking mechanism and the list of the locked ESM registers is described under

7.6.4.2 User Registers

User registers in page 0, except the ESM and the WDOG configuration registers described in セクション 7.6.4.1, and the interrupt registers (x_INT) at address 0x5a through 0x6c in page 0, can be write protected by a dedicated lock. User must write '0x9B' to the REGISTER_LOCK register to unlock the register. Writing any value other than '0x9B' activates the lock again. To check the register lock status, user must read the REGISTER_LOCK_STATUS bit. When this bit is '0', it indicates the user registers are unlocked. When this bit is

Copyright © 2022 Texas Instruments Incorporated

'1', the user registers are locked. During start-up sequence such as powering up for the first time, waking up from LP_STANDBY, or recovering from SAFE_RECOVERY, the user registers are unlocked automatically.

As an extra measure of protection to prevent the accidental change of the buck frequency while the buck is in operation, the BUCKn_FREQ_SEL register bits are locked by the pre-configured NVM settings, unless mentioned otherwise in the User's Guide of the orderable part number.

7.7 Register Map

Copyright © 2022 Texas Instruments Incorporated

7.7.1 LP876242_map Registers

表 7-19 lists the memory-mapped registers for the LP876242_map registers. All register offset addresses not listed in 表 7-19 should be considered as reserved locations and the register contents should not be modified.

表 7-19. LP876242_MAP Registers

Offset	Acronym	Register Name	Section
0x1	DEV_REV		セクション 7.7.1.1
0x2	NVM_CODE_1		セクション 7.7.1.2
0x3	NVM_CODE_2		セクション 7.7.1.3
0x4	BUCK1_CTRL		セクション 7.7.1.4
0x5	BUCK1_CONF		セクション 7.7.1.5
0x6	BUCK2_CTRL		セクション 7.7.1.6
0x7	BUCK2_CONF		セクション 7.7.1.7
0x8	BUCK3_CTRL		セクション 7.7.1.8
0x9	BUCK3_CONF		セクション 7.7.1.9
0xA	BUCK4_CTRL		セクション 7.7.1.10
0xB	BUCK4_CONF		セクション 7.7.1.11
0xE	BUCK1_VOUT_1		セクション 7.7.1.12
0xF	BUCK1_VOUT_2		セクション 7.7.1.13
0x10	BUCK2_VOUT_1		セクション 7.7.1.14
0x11	BUCK2_VOUT_2		セクション 7.7.1.15
0x12	BUCK3_VOUT_1		セクション 7.7.1.16
0x13	BUCK3_VOUT_2		セクション 7.7.1.17
0x14	BUCK4_VOUT_1		セクション 7.7.1.18
0x15	BUCK4_VOUT_2		セクション 7.7.1.19
0x18	BUCK1_PG_WINDOW		セクション 7.7.1.20
0x19	BUCK2_PG_WINDOW		セクション 7.7.1.21
0x1A	BUCK3_PG_WINDOW		セクション 7.7.1.22
0x1B	BUCK4_PG_WINDOW		セクション 7.7.1.23
0x2B	VCCA_VMON_CTRL		セクション 7.7.1.24
0x2C	VCCA_PG_WINDOW		セクション 7.7.1.25
0x2D	VMON1_PG_WINDOW		セクション 7.7.1.26
0x2E	VMON1_PG_LEVEL		セクション 7.7.1.27
0x2F	VMON2_PG_WINDOW		セクション 7.7.1.28
0x30	VMON2_PG_LEVEL		セクション 7.7.1.29
0x31	GPIO1_CONF		セクション 7.7.1.30
0x32	GPIO2_CONF		セクション 7.7.1.31
0x33	GPIO3_CONF		セクション 7.7.1.32
0x34	GPIO4_CONF		セクション 7.7.1.33
0x35	GPIO5_CONF		セクション 7.7.1.34
0x36	GPIO6_CONF		セクション 7.7.1.35
0x37	GPIO7_CONF		セクション 7.7.1.36
0x38	GPIO8_CONF		セクション 7.7.1.37
0x39	GPIO9_CONF		セクション 7.7.1.38
0x3A	GPIO10_CONF		セクション 7.7.1.39

Copyright © 2022 Texas Instruments Incorporated

表 7-19. LP876242_MAP Registers (continued)

Offset	Acronym	Register Name	Section
0x3C	ENABLE_CONF		セクション 7.7.1.40
0x3D	GPIO_OUT_1		セクション 7.7.1.41
0x3E	GPIO_OUT_2		セクション 7.7.1.42
0x3F	GPIO_IN_1		セクション 7.7.1.43
0x40	GPIO_IN_2		セクション 7.7.1.44
0x41	RAIL_SEL_1		セクション 7.7.1.45
0x43	RAIL_SEL_3		セクション 7.7.1.46
0x44	FSM_TRIG_SEL_1		セクション 7.7.1.47
0x45	FSM_TRIG_SEL_2		セクション 7.7.1.48
0x46	FSM_TRIG_MASK_1		セクション 7.7.1.49
0x47	FSM_TRIG_MASK_2		セクション 7.7.1.50
0x48	FSM_TRIG_MASK_3		セクション 7.7.1.51
0x49	MASK_BUCK1_2		セクション 7.7.1.52
0x4A	MASK_BUCK3_4		セクション 7.7.1.53
0x4E	MASK_VMON		セクション 7.7.1.54
0x4F	MASK_GPIO1_8_FALL		セクション 7.7.1.55
0x50	MASK_GPIO1_8_RISE		セクション 7.7.1.56
0x51	MASK_GPIO9_10		セクション 7.7.1.57
0x52	MASK_STARTUP		セクション 7.7.1.58
0x53	MASK_MISC		セクション 7.7.1.59
0x54	MASK_MODERATE_ERR		セクション 7.7.1.60
0x56	MASK_FSM_ERR		セクション 7.7.1.61
0x57	MASK_COMM_ERR		セクション 7.7.1.62
0x58	MASK_READBACK_ERR		セクション 7.7.1.63
0x59	MASK_ESM		セクション 7.7.1.64
0x5A	INT_TOP		セクション 7.7.1.65
0x5B	INT_BUCK		セクション 7.7.1.66
0x5C	INT_BUCK1_2		セクション 7.7.1.67
0x5D	INT_BUCK3_4		セクション 7.7.1.68
0x62	INT_VMON		セクション 7.7.1.69
0x63	INT_GPIO		セクション 7.7.1.70
0x64	INT_GPIO1_8		セクション 7.7.1.71
0x65	INT_STARTUP		セクション 7.7.1.72
0x66	INT_MISC		セクション 7.7.1.73
0x67	INT_MODERATE_ERR		セクション 7.7.1.74
0x68	INT_SEVERE_ERR		セクション 7.7.1.75
0x69	INT_FSM_ERR		セクション 7.7.1.76
0x6A	INT_COMM_ERR		セクション 7.7.1.77
0x6B	INT_READBACK_ERR		セクション 7.7.1.78
0x6C	INT_ESM		セクション 7.7.1.79
0x6D	STAT_BUCK1_2		セクション 7.7.1.80
0x6E	STAT_BUCK3_4		セクション 7.7.1.81
0x72	STAT_VMON		セクション 7.7.1.82

Copyright © 2022 Texas Instruments Incorporated

表 7-19. LP876242_MAP Registers (continued)

Offset	Acronym	Register Name	Section
0x73	STAT_STARTUP		セクション 7.7.1.83
0x74	STAT_MISC		セクション 7.7.1.84
0x75	STAT_MODERATE_ERR		セクション 7.7.1.85
0x76	STAT_SEVERE_ERR		セクション 7.7.1.86
0x77	STAT_READBACK_ERR		セクション 7.7.1.87
0x78	PGOOD_SEL_1		セクション 7.7.1.88
0x7B	PGOOD_SEL_4		セクション 7.7.1.89
0x7C	PLL_CTRL		セクション 7.7.1.90
0x7D	CONFIG_1		セクション 7.7.1.91
0x80	ENABLE_DRV_REG		セクション 7.7.1.92
0x81	MISC_CTRL		セクション 7.7.1.93
0x82	ENABLE_DRV_STAT		セクション 7.7.1.94
0x83	RECOV_CNT_REG_1		セクション 7.7.1.95
0x84	RECOV_CNT_REG_2		セクション 7.7.1.96
0x85	FSM_I2C_TRIGGERS		セクション 7.7.1.97
0x86	FSM_NSLEEP_TRIGGERS		セクション 7.7.1.98
0x87	BUCK_RESET_REG		セクション 7.7.1.99
0x88	SPREAD_SPECTRUM_1		セクション 7.7.1.100
0x8B	FSM_STEP_SIZE		セクション 7.7.1.101
0x8E	USER_SPARE_REGS		セクション 7.7.1.102
0x8F	ESM_MCU_START_REG		セクション 7.7.1.103
0x90	ESM_MCU_DELAY1_REG		セクション 7.7.1.104
0x91	ESM_MCU_DELAY2_REG		セクション 7.7.1.105
0x92	ESM_MCU_MODE_CFG		セクション 7.7.1.106
0x93	ESM_MCU_HMAX_REG		セクション 7.7.1.107
0x94	ESM_MCU_HMIN_REG		セクション 7.7.1.108
0x95	ESM_MCU_LMAX_REG		セクション 7.7.1.109
0x96	ESM_MCU_LMIN_REG		セクション 7.7.1.110
0x97	ESM_MCU_ERR_CNT_REG		セクション 7.7.1.111
0xA1	REGISTER_LOCK		セクション 7.7.1.112
0xA7	CUSTOMER_NVM_ID_REG		セクション 7.7.1.113
0xA8	VMON_CONF		セクション 7.7.1.114
0xA9	INT_SPI_STATUS		セクション 7.7.1.115
0xC3	STARTUP_CTRL		セクション 7.7.1.116
0xC9	SCRATCH_PAD_REG_1		セクション 7.7.1.117
0xCA	SCRATCH_PAD_REG_2		セクション 7.7.1.118
0xCB	SCRATCH_PAD_REG_3		セクション 7.7.1.119
0xCC	SCRATCH_PAD_REG_4		セクション 7.7.1.120
0xCD	PFSM_DELAY_REG_1		セクション 7.7.1.121
0xCE	PFSM_DELAY_REG_2		セクション 7.7.1.122
0xCF	PFSM_DELAY_REG_3		セクション 7.7.1.123
0xD0	PFSM_DELAY_REG_4		セクション 7.7.1.124
0x401	WD_ANSWER_REG		セクション 7.7.1.125

Copyright © 2022 Texas Instruments Incorporated

表 7-19. LP876242_MAP Registers (continued)

Offset	Acronym	Register Name	Section
0x402	WD_QUESTION_ANSW_CNT		セクション 7.7.1.126
0x403	WD_WIN1_CFG		セクション 7.7.1.127
0x404	WD_WIN2_CFG		セクション 7.7.1.128
0x405	WD_LONGWIN_CFG		セクション 7.7.1.129
0x406	WD_MODE_REG		セクション 7.7.1.130
0x407	WD_QA_CFG		セクション 7.7.1.131
0x408	WD_ERR_STATUS		セクション 7.7.1.132
0x409	WD_THR_CFG		セクション 7.7.1.133
0x40A	WD_FAIL_CNT_REG		セクション 7.7.1.134

Complex bit access types are encoded to fit into small table cells. 表 7-20 shows the codes that are used for access types in this section.

表 7-20. LP876242_map Access Type Codes

Access Type	Code	Description
Read Type		
R	R	Read
Write Type		
W	W	Write
W1C	W 1C	Write 1 to clear
WSelfClrF	W	Write
Reset or Default Value		
-n		Value after reset or the default value

Copyright © 2022 Texas Instruments Incorporated

7.7.1.1 DEV_REV Register (Offset = 0x1) [Reset = 0x00]

DEV_REV is shown in 図 7-55 and described in 表 7-21.

Return to the 表 7-19.

図 7-60. DEV_REV Register

7	6	5	4	3	2	1	0
TI_DEVICE_ID							
R/W-0b							

表 7-21. DEV_REV Register Field Descriptions

Bit	Field	Type	Reset	Description
7:0	TI_DEVICE_ID	R/W	0b	Refer to Technical Reference Manual / User's Guide for specific numbering.

7.7.1.2 NVM_CODE_1 Register (Offset = 0x2) [Reset = 0x00]

NVM_CODE_1 is shown in 図 7-56 and described in 表 7-22.

Return to the 表 7-19.

図 7-61. NVM_CODE_1 Register

7	6	5	4	3	2	1	0
TI_NVM_ID							
R/W-0b							

表 7-22. NVM_CODE_1 Register Field Descriptions

Bit	Field	Type	Reset	Description
7:0	TI_NVM_ID	R/W	0b	NVM version of the IC This bit is Read-Only for I2C/SPI access. (Default from NVM memory)

Copyright © 2022 Texas Instruments Incorporated

7.7.1.3 NVM_CODE_2 Register (Offset = 0x3) [Reset = 0x00]

NVM_CODE_2 is shown in 図 7-57 and described in 表 7-23.

Return to the 表 7-19.

図 7-62. NVM_CODE_2 Register

7	6	5	4	3	2	1	0
TI_NVM_REV							
R/W-0b							

表 7-23. NVM_CODE_2 Register Field Descriptions

Bit	Field	Type	Reset	Description
7:0	TI_NVM_REV	R/W	0b	NVM revision of the IC This bit is Read-Only for I2C/SPI access. (Default from NVM memory)

7.7.1.4 BUCK1_CTRL Register (Offset = 0x4) [Reset = 0x22]

BUCK1_CTRL is shown in 図 7-58 and described in 表 7-24.

Return to the 表 7-19.

図 7-63. BUCK1_CTRL Register

7	6	5	4	3	2	1	0
BUCK1_RV_SEL	RESERVED	BUCK1_PLDN	BUCK1_VMON_EN	BUCK1_VSEL	RESERVED	BUCK1_FPWM	BUCK1_EN
R/W-0b	R/W-0b	R/W-1b	R/W-0b	R/W-0b	R/W-0b	R/W-1b	R/W-0b

表 7-24. BUCK1_CTRL Register Field Descriptions

Bit	Field	Type	Reset	Description
7	BUCK1_RV_SEL	R/W	0b	Select residual voltage checking for BUCK1 feedback pin. (Default from NVM memory) 0b = Disabled 1b = Enabled
6	RESERVED	R/W	0b	
5	BUCK1_PLDN	R/W	1b	Enable output pull-down resistor when BUCK1 is disabled: (Default from NVM memory) 0b = Pull-down resistor disabled 1b = Pull-down resistor enabled
4	BUCK1_VMON_EN	R/W	0b	Enable BUCK1 OV, UV, SC and ILIM comparators: (Default from NVM memory) 0b = OV, UV, SC and ILIM comparators are disabled 1b = OV, UV, SC and ILIM comparators are enabled
3	BUCK1_VSEL	R/W	0b	Select output voltage register for BUCK1: (Default from NVM memory) 0b = BUCK1_VOUT_1 1b = BUCK1_VOUT_2
2	RESERVED	R/W	0b	
1	BUCK1_FPWM	R/W	1b	Forces the BUCK1 regulator to operate in PWM mode: (Default from NVM memory) 0b = Automatic transitions between PFM and PWM modes (AUTO mode). 1b = Forced to PWM operation.
0	BUCK1_EN	R/W	0b	Enable BUCK1 regulator: (Default from NVM memory) 0b = BUCK regulator is disabled 1b = BUCK regulator is enabled

Copyright © 2022 Texas Instruments Incorporated

7.7.1.5 BUCK1_CONF Register (Offset = 0x5) [Reset = 0x22]

BUCK1_CONF is shown in 図 7-59 and described in 表 7-25.

Return to the 表 7-19.

図 7-64. BUCK1_CONF Register

7	6	5	4	3	2	1	0
RESERVED		BUCK1_ILIM			BUCK1_SLEW_RATE		
R/W-0b		R/W-100b			R/W-10b		

表 7-25. BUCK1_CONF Register Field Descriptions

Bit	Field	Type	Reset	Description
7:6	RESERVED	R/W	0b	
5:3	BUCK1_ILIM	R/W	100b	Sets the switch peak current limit of BUCK1. Can be programmed at any time during operation. Maximum programmable current limit may be limited based on device settings. (Default from NVM memory) 0b = Reserved 1b = Reserved 10b = 2.5 A 11b = 3.5 A 100b = 4.5 A 101b = Reserved 110b = Reserved 111b = Reserved
2:0	BUCK1_SLEW_RATE	R/W	10b	Sets the output voltage slew rate for BUCK1 regulator (rising and falling edges): (Default from NVM memory) 0b = 33 mV/µs 1b = 20 mV/µs 10b = 10 mV/µs 11b = 5.0 mV/µs 100b = 2.5 mV/µs 101b = 1.3 mV/µs 110b = 0.63 mV/µs 111b = 0.31 mV/µs

Copyright © 2022 Texas Instruments Incorporated

7.7.1.6 BUCK2_CTRL Register (Offset = 0x6) [Reset = 0x22]

BUCK2_CTRL is shown in 図 7-60 and described in 表 7-26.

Return to the 表 7-19.

図 7-65. BUCK2_CTRL Register

7	6	5	4	3	2	1	0
BUCK2_RV_SEL	RESERVED	BUCK2_PLDN	BUCK2_VMON_EN	BUCK2_VSEL	RESERVED	BUCK2_FPWM	BUCK2_EN
R/W-0b	R/W-0b	R/W-1b	R/W-0b	R/W-0b	R/W-0b	R/W-1b	R/W-0b

表 7-26. BUCK2_CTRL Register Field Descriptions

Bit	Field	Type	Reset	Description
7	BUCK2_RV_SEL	R/W	0b	Select residual voltage checking for BUCK2 feedback pin. (Default from NVM memory) 0b = Disabled 1b = Enabled
6	RESERVED	R/W	0b	
5	BUCK2_PLDN	R/W	1b	Enable output pull-down resistor when BUCK2 is disabled: (Default from NVM memory) 0b = Pull-down resistor disabled 1b = Pull-down resistor enabled
4	BUCK2_VMON_EN	R/W	0b	Enable BUCK2 OV, UV, SC and ILIM comparators: (Default from NVM memory) 0b = OV, UV, SC and ILIM comparators are disabled 1b = OV, UV, SC and ILIM comparators are enabled
3	BUCK2_VSEL	R/W	0b	Select output voltage register for BUCK2: (Default from NVM memory) 0b = BUCK2_VOUT_1 1b = BUCK2_VOUT_2
2	RESERVED	R/W	0b	
1	BUCK2_FPWM	R/W	1b	Forces the BUCK2 regulator to operate in PWM mode: LP876242-Q1 device supports only forced PWM operation. (Default from NVM memory) 0b = Automatic transitions between PFM and PWM modes (AUTO mode). 1b = Forced to PWM operation.
0	BUCK2_EN	R/W	0b	Enable BUCK2 regulator: (Default from NVM memory) 0b = BUCK regulator is disabled 1b = BUCK regulator is enabled

Copyright © 2022 Texas Instruments Incorporated

7.7.1.7 BUCK2_CONF Register (Offset = 0x7) [Reset = 0x22]

BUCK2_CONF is shown in 図 7-61 and described in 表 7-27.

Return to the 表 7-19.

図 7-66. BUCK2_CONF Register

7	6	5	4	3	2	1	0
RESERVED		BUCK2_ILIM			BUCK2_SLEW_RATE		
R/W-0b		R/W-100b			R/W-10b		

表 7-27. BUCK2_CONF Register Field Descriptions

Bit	Field	Type	Reset	Description
7:6	RESERVED	R/W	0b	
5:3	BUCK2_ILIM	R/W	100b	Sets the switch peak current limit of BUCK2. Can be programmed at any time during operation. Maximum programmable current limit may be limited based on device settings. (Default from NVM memory) 0b = Reserved 1b = Reserved 10b = 2.5 A 11b = 3.5 A 100b = 4.5 A 101b = 5.5 A 110b = 6.5 A 111b = Reserved
2:0	BUCK2_SLEW_RATE	R/W	10b	Sets the output voltage slew rate for BUCK2 regulator (rising and falling edges): (Default from NVM memory) 0b = 33 mV/µs 1b = 20 mV/µs 10b = 10 mV/µs 11b = 5.0 mV/µs 100b = 2.5 mV/µs 101b = 1.3 mV/µs 110b = 0.63 mV/µs 111b = 0.31 mV/µs

Copyright © 2022 Texas Instruments Incorporated

7.7.1.8 BUCK3_CTRL Register (Offset = 0x8) [Reset = 0x22]

BUCK3_CTRL is shown in 図 7-62 and described in 表 7-28.

Return to the 表 7-19.

図 7-67. BUCK3_CTRL Register

7	6	5	4	3	2	1	0
BUCK3_RV_SEL	RESERVED	BUCK3_PLDN	BUCK3_VMON_EN	BUCK3_VSEL	RESERVED	BUCK3_FPWM	BUCK3_EN
R/W-0b	R/W-0b	R/W-1b	R/W-0b	R/W-0b	R/W-0b	R/W-1b	R/W-0b

表 7-28. BUCK3_CTRL Register Field Descriptions

Bit	Field	Type	Reset	Description
7	BUCK3_RV_SEL	R/W	0b	Select residual voltage checking for BUCK3 feedback pin. (Default from NVM memory) 0b = Disabled 1b = Enabled
6	RESERVED	R/W	0b	
5	BUCK3_PLDN	R/W	1b	Enable output pull-down resistor when BUCK3 is disabled: (Default from NVM memory) 0b = Pull-down resistor disabled 1b = Pull-down resistor enabled
4	BUCK3_VMON_EN	R/W	0b	Enable BUCK3 OV, UV, SC and ILIM comparators: (Default from NVM memory) 0b = OV, UV, SC and ILIM comparators are disabled 1b = OV, UV, SC and ILIM comparators are enabled
3	BUCK3_VSEL	R/W	0b	Select output voltage register for BUCK3: (Default from NVM memory) 0b = BUCK3_VOUT_1 1b = BUCK3_VOUT_2
2	RESERVED	R/W	0b	
1	BUCK3_FPWM	R/W	1b	Forces the BUCK3 regulator to operate in PWM mode: LP876242-Q1 device supports only forced PWM operation. (Default from NVM memory) 0b = Automatic transitions between PFM and PWM modes (AUTO mode). 1b = Forced to PWM operation.
0	BUCK3_EN	R/W	0b	Enable BUCK3 regulator: (Default from NVM memory) 0b = BUCK regulator is disabled 1b = BUCK regulator is enabled

Copyright © 2022 Texas Instruments Incorporated

7.7.1.9 BUCK3_CONF Register (Offset = 0x9) [Reset = 0x22]

BUCK3_CONF is shown in 図 7-63 and described in 表 7-29.

Return to the 表 7-19.

図 7-68. BUCK3_CONF Register

7	6	5	4	3	2	1	0
RESERVED		BUCK3_ILIM			BUCK3_SLEW_RATE		
R/W-0b		R/W-100b			R/W-10b		

表 7-29. BUCK3_CONF Register Field Descriptions

Bit	Field	Type	Reset	Description
7:6	RESERVED	R/W	0b	
5:3	BUCK3_ILIM	R/W	100b	Sets the switch peak current limit of BUCK3. Can be programmed at any time during operation. Maximum programmable current limit may be limited based on device settings. (Default from NVM memory) 0b = Reserved 1b = Reserved 10b = 2.5 A 11b = 3.5 A 100b = 4.5 A 101b = 5.5 A 110b = Reserved 111b = Reserved
2:0	BUCK3_SLEW_RATE	R/W	10b	Sets the output voltage slew rate for BUCK3 regulator (rising and falling edges): (Default from NVM memory) 0b = 33 mV/µs 1b = 20 mV/µs 10b = 10 mV/µs 11b = 5.0 mV/µs 100b = 2.5 mV/µs 101b = 1.3 mV/µs 110b = 0.63 mV/µs 111b = 0.31 mV/µs

Copyright © 2022 Texas Instruments Incorporated

7.7.1.10 BUCK4_CTRL Register (Offset = 0xA) [Reset = 0x22]

BUCK4_CTRL is shown in 図 7-64 and described in 表 7-30.

Return to the 表 7-19.

図 7-69. BUCK4_CTRL Register

7	6	5	4	3	2	1	0
BUCK4_RV_SEL	RESERVED	BUCK4_PLDN	BUCK4_VMON_EN	BUCK4_VSEL	RESERVED	BUCK4_FPWM	BUCK4_EN
R/W-0b	R/W-0b	R/W-1b	R/W-0b	R/W-0b	R/W-0b	R/W-1b	R/W-0b

表 7-30. BUCK4_CTRL Register Field Descriptions

Bit	Field	Type	Reset	Description
7	BUCK4_RV_SEL	R/W	0b	Select residual voltage checking for BUCK4 feedback pin. (Default from NVM memory) 0b = Disabled 1b = Enabled
6	RESERVED	R/W	0b	
5	BUCK4_PLDN	R/W	1b	Enable output pull-down resistor when BUCK4 is disabled: (Default from NVM memory) 0b = Pull-down resistor disabled 1b = Pull-down resistor enabled
4	BUCK4_VMON_EN	R/W	0b	Enable BUCK4 OV, UV, SC and ILIM comparators: (Default from NVM memory) 0b = OV, UV, SC and ILIM comparators are disabled 1b = OV, UV, SC and ILIM comparators are enabled
3	BUCK4_VSEL	R/W	0b	Select output voltage register for BUCK4: (Default from NVM memory) 0b = BUCK4_VOUT_1 1b = BUCK4_VOUT_2
2	RESERVED	R/W	0b	
1	BUCK4_FPWM	R/W	1b	Forces the BUCK4 regulator to operate in PWM mode: LP876242-Q1 device supports only forced PWM operation. (Default from NVM memory) 0b = Automatic transitions between PFM and PWM modes (AUTO mode). 1b = Forced to PWM operation.
0	BUCK4_EN	R/W	0b	Enable BUCK4 regulator: (Default from NVM memory) 0b = BUCK regulator is disabled 1b = BUCK regulator is enabled

Copyright © 2022 Texas Instruments Incorporated

7.7.1.11 BUCK4_CONF Register (Offset = 0xB) [Reset = 0x22]

BUCK4_CONF is shown in 図 7-65 and described in 表 7-31.

Return to the 表 7-19.

図 7-70. BUCK4_CONF Register

7	6	5	4	3	2	1	0
RESERVED		BUCK4_ILIM			BUCK4_SLEW_RATE		
R/W-0b		R/W-100b			R/W-10b		

表 7-31. BUCK4_CONF Register Field Descriptions

Bit	Field	Type	Reset	Description
7:6	RESERVED	R/W	0b	
5:3	BUCK4_ILIM	R/W	100b	Sets the switch peak current limit of BUCK4. Can be programmed at any time during operation. Maximum programmable current limit may be limited based on device settings. (Default from NVM memory) 0b = Reserved 1b = Reserved 10b = 2.5 A 11b = 3.5 A 100b = 4.5 A 101b = 5.5 A 110b = Reserved 111b = Reserved
2:0	BUCK4_SLEW_RATE	R/W	10b	Sets the output voltage slew rate for BUCK4 regulator (rising and falling edges): (Default from NVM memory) 0b = 33 mV/µs 1b = 20 mV/µs 10b = 10 mV/µs 11b = 5.0 mV/µs 100b = 2.5 mV/µs 101b = 1.3 mV/µs 110b = 0.63 mV/µs 111b = 0.31 mV/µs

Copyright © 2022 Texas Instruments Incorporated

7.7.1.12 BUCK1_VOUT_1 Register (Offset = 0xE) [Reset = 0x00]

BUCK1_VOUT_1 is shown in 図 7-66 and described in 表 7-32.

Return to the 表 7-19.

図 7-71. BUCK1_VOUT_1 Register

7	6	5	4	3	2	1	0
BUCK1_VSET1							
R/W-0b							

表 7-32. BUCK1_VOUT_1 Register Field Descriptions

Bit	Field	Type	Reset	Description
7:0	BUCK1_VSET1	R/W	0b	Voltage selection for buck regulator. See Buck regulators chapter for voltage levels. (Default from NVM memory)

Copyright © 2022 Texas Instruments Incorporated

7.7.1.13 BUCK1_VOUT_2 Register (Offset = 0xF) [Reset = 0x00]

BUCK1_VOUT_2 is shown in 図 7-67 and described in 表 7-33.

Return to the 表 7-19.

図 7-72. BUCK1_VOUT_2 Register

7	6	5	4	3	2	1	0
BUCK1_VSET2							
R/W-0b							

表 7-33. BUCK1_VOUT_2 Register Field Descriptions

Bit	Field	Type	Reset	Description
7:0	BUCK1_VSET2	R/W	0b	Voltage selection for buck regulator. See Buck regulators chapter for voltage levels. (Default from NVM memory)

7.7.1.14 BUCK2_VOUT_1 Register (Offset = 0x10) [Reset = 0x00]

BUCK2_VOUT_1 is shown in 図 7-68 and described in 表 7-34.

Return to the 表 7-19.

図 7-73. BUCK2_VOUT_1 Register

7	6	5	4	3	2	1	0
BUCK2_VSET1							
R/W-0b							

表 7-34. BUCK2_VOUT_1 Register Field Descriptions

Bit	Field	Type	Reset	Description
7:0	BUCK2_VSET1	R/W	0b	Voltage selection for buck regulator. See Buck regulators chapter for voltage levels. (Default from NVM memory)

Copyright © 2022 Texas Instruments Incorporated

7.7.1.15 BUCK2_VOUT_2 Register (Offset = 0x11) [Reset = 0x00]

BUCK2_VOUT_2 is shown in 図 7-69 and described in 表 7-35.

Return to the 表 7-19.

図 7-74. BUCK2_VOUT_2 Register

7	6	5	4	3	2	1	0
BUCK2_VSET2							
R/W-0b							

表 7-35. BUCK2_VOUT_2 Register Field Descriptions

Bit	Field	Type	Reset	Description
7:0	BUCK2_VSET2	R/W	0b	Voltage selection for buck regulator. See Buck regulators chapter for voltage levels. (Default from NVM memory)

7.7.1.16 BUCK3_VOUT_1 Register (Offset = 0x12) [Reset = 0x00]

BUCK3_VOUT_1 is shown in 図 7-70 and described in 表 7-36.

Return to the 表 7-19.

図 7-75. BUCK3_VOUT_1 Register

7	6	5	4	3	2	1	0
BUCK3_VSET1							
R/W-0b							

表 7-36. BUCK3_VOUT_1 Register Field Descriptions

Bit	Field	Type	Reset	Description
7:0	BUCK3_VSET1	R/W	0b	Voltage selection for buck regulator. See Buck regulators chapter for voltage levels. (Default from NVM memory)

Copyright © 2022 Texas Instruments Incorporated

7.7.1.17 BUCK3_VOUT_2 Register (Offset = 0x13) [Reset = 0x00]

BUCK3_VOUT_2 is shown in 図 7-71 and described in 表 7-37.

Return to the 表 7-19.

図 7-76. BUCK3_VOUT_2 Register

7	6	5	4	3	2	1	0
BUCK3_VSET2							
R/W-0b							

表 7-37. BUCK3_VOUT_2 Register Field Descriptions

Bit	Field	Type	Reset	Description
7:0	BUCK3_VSET2	R/W	0b	Voltage selection for buck regulator. See Buck regulators chapter for voltage levels. (Default from NVM memory)

7.7.1.18 BUCK4_VOUT_1 Register (Offset = 0x14) [Reset = 0x00]

BUCK4_VOUT_1 is shown in 図 7-72 and described in 表 7-38.

Return to the 表 7-19.

図 7-77. BUCK4_VOUT_1 Register

7	6	5	4	3	2	1	0
BUCK4_VSET1							
R/W-0b							

表 7-38. BUCK4_VOUT_1 Register Field Descriptions

Bit	Field	Type	Reset	Description
7:0	BUCK4_VSET1	R/W	0b	Voltage selection for buck regulator. See Buck regulators chapter for voltage levels. (Default from NVM memory)

Copyright © 2022 Texas Instruments Incorporated

7.7.1.19 BUCK4_VOUT_2 Register (Offset = 0x15) [Reset = 0x00]

BUCK4_VOUT_2 is shown in 図 7-73 and described in 表 7-39.

Return to the 表 7-19.

図 7-78. BUCK4_VOUT_2 Register

7	6	5	4	3	2	1	0
BUCK4_VSET2							
R/W-0b							

表 7-39. BUCK4_VOUT_2 Register Field Descriptions

Bit	Field	Type	Reset	Description
7:0	BUCK4_VSET2	R/W	0b	Voltage selection for buck regulator. See Buck regulators chapter for voltage levels. (Default from NVM memory)

7.7.1.20 BUCK1_PG_WINDOW Register (Offset = 0x18) [Reset = 0x00]

BUCK1_PG_WINDOW is shown in 図 7-74 and described in 表 7-40.

Return to the 表 7-19.

図 7-79. BUCK1_PG_WINDOW Register

7	6	5	4	3	2	1	0
RESERVED		BUCK1_UV_THR			BUCK1_OV_THR		
R/W-0b		R/W-0b			R/W-0b		

表 7-40. BUCK1_PG_WINDOW Register Field Descriptions

Bit	Field	Type	Reset	Description
7:6	RESERVED	R/W	0b	
5:3	BUCK1_UV_THR	R/W	0b	Powergood low threshold level for BUCK1: (Default from NVM memory) 0b = -3% / -30mV 1b = -3.5% / -35 mV 10b = -4% / -40 mV 11b = -5% / -50 mV 100b = -6% / -60 mV 101b = -7% / -70 mV 110b = -8% / -80 mV 111b = -10% / -100mV
2:0	BUCK1_OV_THR	R/W	0b	Powergood high threshold level for BUCK1: (Default from NVM memory) 0b = +3% / +30mV 1b = +3.5% / +35 mV 10b = +4% / +40 mV 11b = +5% / +50 mV 100b = +6% / +60 mV 101b = +7% / +70 mV 110b = +8% / +80 mV 111b = +10% / +100mV

Copyright © 2022 Texas Instruments Incorporated

7.7.1.21 BUCK2_PG_WINDOW Register (Offset = 0x19) [Reset = 0x00]

BUCK2_PG_WINDOW is shown in 図 7-75 and described in 表 7-41.

Return to the 表 7-19.

図 7-80. BUCK2_PG_WINDOW Register

7	6	5	4	3	2	1	0
RESERVED		BUCK2_UV_THR			BUCK2_OV_THR		
R/W-0b		R/W-0b			R/W-0b		

表 7-41. BUCK2_PG_WINDOW Register Field Descriptions

Bit	Field	Type	Reset	Description
7:6	RESERVED	R/W	0b	
5:3	BUCK2_UV_THR	R/W	0b	Powergood low threshold level for BUCK2: (Default from NVM memory) 0b = -3% / -30mV 1b = -3.5% / -35 mV 10b = -4% / -40 mV 11b = -5% / -50 mV 100b = -6% / -60 mV 101b = -7% / -70 mV 110b = -8% / -80 mV 111b = -10% / -100mV
2:0	BUCK2_OV_THR	R/W	0b	Powergood high threshold level for BUCK2: (Default from NVM memory) 0b = +3% / +30mV 1b = +3.5% / +35 mV 10b = +4% / +40 mV 11b = +5% / +50 mV 100b = +6% / +60 mV 101b = +7% / +70 mV 110b = +8% / +80 mV 111b = +10% / +100mV

Copyright © 2022 Texas Instruments Incorporated

7.7.1.22 BUCK3_PG_WINDOW Register (Offset = 0x1A) [Reset = 0x00]

BUCK3_PG_WINDOW is shown in 図 7-76 and described in 表 7-42.

Return to the 表 7-19.

図 7-81. BUCK3_PG_WINDOW Register

7	6	5	4	3	2	1	0
RESERVED		BUCK3_UV_THR			BUCK3_OV_THR		
R/W-0b		R/W-0b			R/W-0b		

表 7-42. BUCK3_PG_WINDOW Register Field Descriptions

Bit	Field	Type	Reset	Description
7:6	RESERVED	R/W	0b	
5:3	BUCK3_UV_THR	R/W	0b	Powergood low threshold level for BUCK3: (Default from NVM memory) 0b = -3% / -30mV 1b = -3.5% / -35 mV 10b = -4% / -40 mV 11b = -5% / -50 mV 100b = -6% / -60 mV 101b = -7% / -70 mV 110b = -8% / -80 mV 111b = -10% / -100mV
2:0	BUCK3_OV_THR	R/W	0b	Powergood high threshold level for BUCK3: (Default from NVM memory) 0b = +3% / +30mV 1b = +3.5% / +35 mV 10b = +4% / +40 mV 11b = +5% / +50 mV 100b = +6% / +60 mV 101b = +7% / +70 mV 110b = +8% / +80 mV 111b = +10% / +100mV

Copyright © 2022 Texas Instruments Incorporated

7.7.1.23 BUCK4_PG_WINDOW Register (Offset = 0x1B) [Reset = 0x00]

BUCK4_PG_WINDOW is shown in 図 7-77 and described in 表 7-43.

Return to the 表 7-19.

図 7-82. BUCK4_PG_WINDOW Register

7	6	5	4	3	2	1	0
RESERVED		BUCK4_UV_THR			BUCK4_OV_THR		
R/W-0b		R/W-0b			R/W-0b		

表 7-43. BUCK4_PG_WINDOW Register Field Descriptions

Bit	Field	Type	Reset	Description
7:6	RESERVED	R/W	0b	
5:3	BUCK4_UV_THR	R/W	0b	Powergood low threshold level for BUCK4: (Default from NVM memory) 0b = -3% / -30mV 1b = -3.5% / -35 mV 10b = -4% / -40 mV 11b = -5% / -50 mV 100b = -6% / -60 mV 101b = -7% / -70 mV 110b = -8% / -80 mV 111b = -10% / -100mV
2:0	BUCK4_OV_THR	R/W	0b	Powergood high threshold level for BUCK4: (Default from NVM memory) 0b = +3% / +30mV 1b = +3.5% / +35 mV 10b = +4% / +40 mV 11b = +5% / +50 mV 100b = +6% / +60 mV 101b = +7% / +70 mV 110b = +8% / +80 mV 111b = +10% / +100mV

Copyright © 2022 Texas Instruments Incorporated

7.7.1.24 VCCA_VMON_CTRL Register (Offset = 0x2B) [Reset = 0x00]

VCCA_VMON_CTRL is shown in 図 7-78 and described in 表 7-44.

Return to the 表 7-19.

図 7-83. VCCA_VMON_CTRL Register

7	6	5	4	3	2	1	0
VMON_DEGLITCH_SEL			VMON2_RV_SEL	VMON2_EN	VMON1_RV_SEL	VMON1_EN	VCCA_VMON_EN
R/W-0b			R/W-0b	R/W-0b	R/W-0b	R/W-0b	R/W-0b

表 7-44. VCCA_VMON_CTRL Register Field Descriptions

Bit	Field	Type	Reset	Description
7:5	VMON_DEGLITCH_SEL	R/W	0b	Deglitch time select for VCCA_VMON / BUCKx_VMON / VMONx voltage monitors. (Default from NVM memory) 0b = 4 us / 4 us / 4 us 1b = 20 us / 20 us / 20 us 10b = 0.5 us / 0.5 us / 0.5 us 11b = 4 us / 0.5 us / 0.5 us 100b = 20 us / 0.5 us / 0.5 us 101b = 0.5 us / 4 us / 4 us 110b = 4 us / 4 us / 4 us 111b = 20 us / 4 us / 4 us
4	VMON2_RV_SEL	R/W	0b	Select residual voltage checking for VMON2 pin. (Default from NVM memory) 0b = Disabled 1b = Enabled
3	VMON2_EN	R/W	0b	Enable VMON2 OV and UV comparators: (Default from NVM memory) 0b = OV and UV comparators are disabled 1b = OV and UV comparators are enabled
2	VMON1_RV_SEL	R/W	0b	Select residual voltage checking for VMON1 pin. (Default from NVM memory) 0b = Disabled 1b = Enabled
1	VMON1_EN	R/W	0b	Enable VMON1 OV and UV comparators: (Default from NVM memory) 0b = OV and UV comparators are disabled 1b = OV and UV comparators are enabled
0	VCCA_VMON_EN	R/W	0b	Enable VCCA OV and UV comparators: (Default from NVM memory) 0b = OV and UV comparators are disabled 1b = OV and UV comparators are enabled.

Copyright © 2022 Texas Instruments Incorporated

7.7.1.25 VCCA_PG_WINDOW Register (Offset = 0x2C) [Reset = 0x00]

VCCA_PG_WINDOW is shown in 図 7-79 and described in 表 7-45.

Return to the 表 7-19.

図 7-84. VCCA_PG_WINDOW Register

7	6	5	4	3	2	1	0
RESERVED	VCCA_PG_SET	VCCA_UV_THR			VCCA_OV_THR		
R/W-0b	R/W-0b	R/W-0b			R/W-0b		

表 7-45. VCCA_PG_WINDOW Register Field Descriptions

Bit	Field	Type	Reset	Description
7	RESERVED	R/W	0b	
6	VCCA_PG_SET	R/W	0b	Powergood level for VCCA pin: (Default from NVM memory) 0b = 3.3 V 1b = 5.0 V
5:3	VCCA_UV_THR	R/W	0b	Powergood low threshold level for VCCA pin: (Default from NVM memory) 0b = -3% 1b = -3.5% 10b = -4% 11b = -5% 100b = -6% 101b = -7% 110b = -8% 111b = -10%
2:0	VCCA_OV_THR	R/W	0b	Powergood high threshold level for VCCA pin: (Default from NVM memory) 0b = +3% 1b = +3.5% 10b = +4% 11b = +5% 100b = +6% 101b = +7% 110b = +8% 111b = +10%

Copyright © 2022 Texas Instruments Incorporated

7.7.1.26 VMON1_PG_WINDOW Register (Offset = 0x2D) [Reset = 0x00]

VMON1_PG_WINDOW is shown in 図 7-80 and described in 表 7-46.

Return to the 表 7-19.

図 7-85. VMON1_PG_WINDOW Register

7	6	5	4	3	2	1	0
RESERVED	VMON1_RANGE	VMON1_UV_THR			VMON1_OV_THR		
R/W-0b	R/W-0b	R/W-0b			R/W-0b		

表 7-46. VMON1_PG_WINDOW Register Field Descriptions

Bit	Field	Type	Reset	Description
7	RESERVED	R/W	0b	
6	VMON1_RANGE	R/W	0b	Select OV/UV voltage monitoring range: (Default from NVM memory) 0b = 0.3 - 3.34 V 1b = 3.35 - 5.0 V
5:3	VMON1_UV_THR	R/W	0b	Powergood low threshold level for VMON1. Threshold values in brackets are for extended voltage range (VMON1_RANGE = 1): (Default from NVM memory) 0b = -3% / -30 mV / (-150 mV) 1b = -3.5% / -35 mV / (-175 mV) 10b = -4% / -40 mV / (-200 mV) 11b = -5% / -50 mV / (-250 mV) 100b = -6% / -60 mV / (-300 mV) 101b = -7% / -70 mV / (-350 mV) 110b = -8% / -80 mV / (-400 mV) 111b = -10% / -100 mV / (-500 mV)
2:0	VMON1_OV_THR	R/W	0b	Powergood high threshold level for VMON1. Threshold values in brackets are for extended voltage range (VMON1_RANGE = 1): (Default from NVM memory) 0b = +3% / +30 mV / (+150 mV) 1b = +3.5% / +35 mV / (+175 mV) 10b = +4% / +40 mV / (+200 mV) 11b = +5% / +50 mV / (+250 mV) 100b = +6% / +60 mV / (+300 mV) 101b = +7% / +70 mV / (+350 mV) 110b = +8% / +80 mV / (+400 mV) 111b = +10% / +100mV / (+500 mV)

Copyright © 2022 Texas Instruments Incorporated

7.7.1.27 VMON1_PG_LEVEL Register (Offset = 0x2E) [Reset = 0x00]

VMON1_PG_LEVEL is shown in 図 7-81 and described in 表 7-47.

Return to the 表 7-19.

図 7-86. VMON1_PG_LEVEL Register

7	6	5	4	3	2	1	0
VMON1_PG_SET							
R/W-0b							

表 7-47. VMON1_PG_LEVEL Register Field Descriptions

Bit	Field	Type	Reset	Description
7:0	VMON1_PG_SET	R/W	0b	Powergood voltage level of VMON1 pin, VMON1_OV_THR[2:0] and VMON1_UV_THR[2:0] defines the threshold levels. See Voltage monitoring chapter for voltage levels. (Default from NVM memory)

7.7.1.28 VMON2_PG_WINDOW Register (Offset = 0x2F) [Reset = 0x00]

VMON2_PG_WINDOW is shown in 図 7-82 and described in 表 7-48.

Return to the 表 7-19.

図 7-87. VMON2_PG_WINDOW Register

7	6	5	4	3	2	1	0
RESERVED	VMON2_RANGE	VMON2_UV_THR			VMON2_OV_THR		
R/W-0b	R/W-0b	R/W-0b			R/W-0b		

表 7-48. VMON2_PG_WINDOW Register Field Descriptions

Bit	Field	Type	Reset	Description
7	RESERVED	R/W	0b	
6	VMON2_RANGE	R/W	0b	Select OV/UV voltage monitoring range: (Default from NVM memory) 0b = 0.3 - 3.34 V 1b = 3.35 - 5.0 V
5:3	VMON2_UV_THR	R/W	0b	Powergood low threshold level for VMON2. Threshold values in brackets are for extended voltage range (VMON2_RANGE = 1): (Default from NVM memory) 0b = -3% / -30 mV / (-150 mV) 1b = -3.5% / -35 mV / (-175 mV) 10b = -4% / -40 mV / (-200 mV) 11b = -5% / -50 mV / (-250 mV) 100b = -6% / -60 mV / (-300 mV) 101b = -7% / -70 mV / (-350 mV) 110b = -8% / -80 mV / (-400 mV) 111b = -10% / -100 mV / (-500 mV)
2:0	VMON2_OV_THR	R/W	0b	Powergood high threshold level for VMON2. Threshold values in brackets are for extended voltage range (VMON2_RANGE = 1): (Default from NVM memory) 0b = +3% / +30mV / (+150 mV) 1b = +3.5% / +35 mV / (+175 mV) 10b = +4% / +40 mV / (+200 mV) 11b = +5% / +50 mV / (+250 mV) 100b = +6% / +60 mV / (+300 mV) 101b = +7% / +70 mV / (+350 mV) 110b = +8% / +80 mV / (+400 mV) 111b = +10% / +100mV / (+500 mV)

Copyright © 2022 Texas Instruments Incorporated

7.7.1.29 VMON2_PG_LEVEL Register (Offset = 0x30) [Reset = 0x00]

VMON2_PG_LEVEL is shown in 図 7-83 and described in 表 7-49.

Return to the 表 7-19.

図 7-88. VMON2_PG_LEVEL Register

7	6	5	4	3	2	1	0
VMON2_PG_SET							
R/W-0b							

表 7-49. VMON2_PG_LEVEL Register Field Descriptions

Bit	Field	Type	Reset	Description
7:0	VMON2_PG_SET	R/W	0b	Powergood voltage level of VMON2 pin, VMON2_OV_THR[2:0] and VMON2_UV_THR[2:0] defines the threshold levels. See Voltage monitoring chapter for voltage levels. (Default from NVM memory)

7.7.1.30 GPIO1_CONF Register (Offset = 0x31) [Reset = 0x2A]

GPIO1_CONF is shown in 図 7-84 and described in 表 7-50.

Return to the 表 7-19.

図 7-89. GPIO1_CONF Register

7	6	5	4	3	2	1	0
GPIO1_SEL			GPIO1_DEGLITCH_EN	GPIO1_PU_PD_EN	GPIO1_PU_SEL	GPIO1_OD	GPIO1_DIR
R/W-1b			R/W-0b	R/W-1b	R/W-0b	R/W-1b	R/W-0b

表 7-50. GPIO1_CONF Register Field Descriptions

Bit	Field	Type	Reset	Description
7:5	GPIO1_SEL	R/W	1b	GPIO1 signal function: (Default from NVM memory) 0b = GPIO1 1b = EN_DRV 10b = NRSTOUT_SOC 11b = PGOOD 100b = NSLEEP1 101b = NSLEEP2 110b = WKUP1 111b = WKUP2
4	GPIO1_DEGLITCH_EN	R/W	0b	GPIO1 signal deglitch time when signal direction is input: (Default from NVM memory) 0b = No deglitch, only synchronization. 1b = 8 us deglitch time.
3	GPIO1_PU_PD_EN	R/W	1b	Control for GPIO1 pin pull-up/pull-down resistor: (Default from NVM memory) 0b = Pull-up/pull-down resistor disabled 1b = Pull-up/pull-down resistor enabled
2	GPIO1_PU_SEL	R/W	0b	Control for GPIO1 pin pull-up/pull-down resistor: GPIO1_PU_PD_EN must be 1 to select the resistor. (Default from NVM memory) 0b = Pull-down resistor selected 1b = Pull-up resistor selected
1	GPIO1_OD	R/W	1b	GPIO1 signal type when configured to output: (Default from NVM memory) 0b = Push-pull output 1b = Open-drain output
0	GPIO1_DIR	R/W	0b	GPIO1 signal direction: (Default from NVM memory) 0b = Input 1b = Output

Copyright © 2022 Texas Instruments Incorporated

7.7.1.31 GPIO2_CONF Register (Offset = 0x32) [Reset = 0x0A]

GPIO2_CONF is shown in 図 7-85 and described in 表 7-51.

Return to the 表 7-19.

図 7-90. GPIO2_CONF Register

7	6	5	4	3	2	1	0
GPIO2_SEL			GPIO2_DEGLITCH_EN	GPIO2_PU_PD_EN	GPIO2_PU_SEL	GPIO2_OD	GPIO2_DIR
R/W-0b			R/W-0b	R/W-1b	R/W-0b	R/W-1b	R/W-0b

表 7-51. GPIO2_CONF Register Field Descriptions

Bit	Field	Type	Reset	Description
7:5	GPIO2_SEL	R/W	0b	GPIO2 signal function: (Default from NVM memory) 0b = GPIO2 1b = SCL_I2C2 10b = CS_SPI 11b = TRIG_WDOG 100b = NSLEEP1 101b = NSLEEP2 110b = WKUP1 111b = WKUP2
4	GPIO2_DEGLITCH_EN	R/W	0b	GPIO2 signal deglitch time when signal direction is input: (Default from NVM memory) 0b = No deglitch, only synchronization. 1b = 8 us deglitch time.
3	GPIO2_PU_PD_EN	R/W	1b	Control for GPIO2 pin pull-up/pull-down resistor: (Default from NVM memory) 0b = Pull-up/pull-down resistor disabled 1b = Pull-up/pull-down resistor enabled
2	GPIO2_PU_SEL	R/W	0b	Control for GPIO2 pin pull-up/pull-down resistor: GPIO2_PU_PD_EN must be 1 to select the resistor. (Default from NVM memory) 0b = Pull-down resistor selected 1b = Pull-up resistor selected
1	GPIO2_OD	R/W	1b	GPIO2 signal type when configured to output: (Default from NVM memory) 0b = Push-pull output 1b = Open-drain output
0	GPIO2_DIR	R/W	0b	GPIO2 signal direction: (Default from NVM memory) 0b = Input 1b = Output

Copyright © 2022 Texas Instruments Incorporated

7.7.1.32 GPIO3_CONF Register (Offset = 0x33) [Reset = 0x0A]

GPIO3_CONF is shown in 図 7-86 and described in 表 7-52.

Return to the 表 7-19.

図 7-91. GPIO3_CONF Register

7	6	5	4	3	2	1	0
GPIO3_SEL			GPIO3_DEGLITCH_EN	GPIO3_PU_PD_EN	GPIO3_PU_SEL	GPIO3_OD	GPIO3_DIR
R/W-0b			R/W-0b	R/W-1b	R/W-0b	R/W-1b	R/W-0b

表 7-52. GPIO3_CONF Register Field Descriptions

Bit	Field	Type	Reset	Description
7:5	GPIO3_SEL	R/W	0b	GPIO3 signal function: (Default from NVM memory) 0b = GPIO3 1b = SDA_I2C2 10b = SDO_SPI 11b = SDO_SPI 100b = NSLEEP1 101b = NSLEEP2 110b = WKUP1 111b = WKUP2
4	GPIO3_DEGLITCH_EN	R/W	0b	GPIO3 signal deglitch time when signal direction is input: (Default from NVM memory) 0b = No deglitch, only synchronization. 1b = 8 us deglitch time.
3	GPIO3_PU_PD_EN	R/W	1b	Control for GPIO3 pin pull-up/pull-down resistor: (Default from NVM memory) 0b = Pull-up/pull-down resistor disabled 1b = Pull-up/pull-down resistor enabled
2	GPIO3_PU_SEL	R/W	0b	Control for GPIO3 pin pull-up/pull-down resistor: GPIO3_PU_PD_EN must be 1 to select the resistor. (Default from NVM memory) 0b = Pull-down resistor selected 1b = Pull-up resistor selected
1	GPIO3_OD	R/W	1b	GPIO3 signal type when configured to output: (Default from NVM memory) 0b = Push-pull output 1b = Open-drain output
0	GPIO3_DIR	R/W	0b	GPIO3 signal direction: (Default from NVM memory) 0b = Input 1b = Output

Copyright © 2022 Texas Instruments Incorporated

7.7.1.33 GPIO4_CONF Register (Offset = 0x34) [Reset = 0x0A]

GPIO4_CONF is shown in 図 7-87 and described in 表 7-53.

Return to the 表 7-19.

図 7-92. GPIO4_CONF Register

7	6	5	4	3	2	1	0
GPIO4_SEL			GPIO4_DEGLITCH_EN	GPIO4_PU_PD_EN	GPIO4_PU_SEL	GPIO4_OD	GPIO4_DIR
R/W-0b			R/W-0b	R/W-1b	R/W-0b	R/W-1b	R/W-0b

表 7-53. GPIO4_CONF Register Field Descriptions

Bit	Field	Type	Reset	Description
7:5	GPIO4_SEL	R/W	0b	GPIO4 signal function: (Default from NVM memory) 0b = GPIO4 1b = ENABLE 10b = TRIG_WDOG 11b = BUCK1_VMON. Buck1 voltage monitoring input is GPIO4 instead of FB_B1. 100b = NSLEEP1 101b = NSLEEP2 110b = WKUP1 111b = WKUP2
4	GPIO4_DEGLITCH_EN	R/W	0b	GPIO4 signal deglitch time when signal direction is input: (Default from NVM memory) 0b = No deglitch, only synchronization. 1b = 8 us deglitch time.
3	GPIO4_PU_PD_EN	R/W	1b	Control for GPIO4 pin pull-up/pull-down resistor: (Default from NVM memory) 0b = Pull-up/pull-down resistor disabled 1b = Pull-up/pull-down resistor enabled
2	GPIO4_PU_SEL	R/W	0b	Control for GPIO4 pin pull-up/pull-down resistor: GPIO4_PU_PD_EN must be 1 to select the resistor. (Default from NVM memory) 0b = Pull-down resistor selected 1b = Pull-up resistor selected
1	GPIO4_OD	R/W	1b	GPIO4 signal type when configured to output: (Default from NVM memory) 0b = Push-pull output 1b = Open-drain output
0	GPIO4_DIR	R/W	0b	GPIO4 signal direction: (Default from NVM memory) 0b = Input 1b = Output

Copyright © 2022 Texas Instruments Incorporated

7.7.1.34 GPIO5_CONF Register (Offset = 0x35) [Reset = 0x0A]

GPIO5_CONF is shown in 図 7-88 and described in 表 7-54.

Return to the 表 7-19.

図 7-93. GPIO5_CONF Register

7	6	5	4	3	2	1	0
GPIO5_SEL			GPIO5_DEGLITCH_EN	GPIO5_PU_PD_EN	GPIO5_PU_SEL	GPIO5_OD	GPIO5_DIR
R/W-0b			R/W-0b	R/W-1b	R/W-0b	R/W-1b	R/W-0b

表 7-54. GPIO5_CONF Register Field Descriptions

Bit	Field	Type	Reset	Description
7:5	GPIO5_SEL	R/W	0b	GPIO5 signal function: (Default from NVM memory) 0b = GPIO5 1b = SYNCCLKIN 10b = SYNCCLKOUT 11b = nRSTOUT_SOC 100b = NSLEEP1 101b = NSLEEP2 110b = WKUP1 111b = WKUP2
4	GPIO5_DEGLITCH_EN	R/W	0b	GPIO5 signal deglitch time when signal direction is input: (Default from NVM memory) 0b = No deglitch, only synchronization. 1b = 8 us deglitch time.
3	GPIO5_PU_PD_EN	R/W	1b	Control for GPIO5 pin pull-up/pull-down resistor: (Default from NVM memory) 0b = Pull-up/pull-down resistor disabled 1b = Pull-up/pull-down resistor enabled
2	GPIO5_PU_SEL	R/W	0b	Control for GPIO5 pin pull-up/pull-down resistor: GPIO5_PU_PD_EN must be 1 to select the resistor. (Default from NVM memory) 0b = Pull-down resistor selected 1b = Pull-up resistor selected
1	GPIO5_OD	R/W	1b	GPIO5 signal type when configured to output: (Default from NVM memory) 0b = Push-pull output 1b = Open-drain output
0	GPIO5_DIR	R/W	0b	GPIO5 signal direction: (Default from NVM memory) 0b = Input 1b = Output

Copyright © 2022 Texas Instruments Incorporated

7.7.1.35 GPIO6_CONF Register (Offset = 0x36) [Reset = 0x0A]

GPIO6_CONF is shown in 図 7-89 and described in 表 7-55.

Return to the 表 7-19.

図 7-94. GPIO6_CONF Register

7	6	5	4	3	2	1	0
GPIO6_SEL			GPIO6_DEGLITCH_EN	GPIO6_PU_PD_EN	GPIO6_PU_SEL	GPIO6_OD	GPIO6_DIR
R/W-0b			R/W-0b	R/W-1b	R/W-0b	R/W-1b	R/W-0b

表 7-55. GPIO6_CONF Register Field Descriptions

Bit	Field	Type	Reset	Description
7:5	GPIO6_SEL	R/W	0b	GPIO6 signal function: (Default from NVM memory) 0b = GPIO6 1b = nERR_MCU 10b = SYNCCLKOUT 11b = PGOOD 100b = NSLEEP1 101b = NSLEEP2 110b = WKUP1 111b = WKUP2
4	GPIO6_DEGLITCH_EN	R/W	0b	GPIO6 signal deglitch time when signal direction is input: (Default from NVM memory) 0b = No deglitch, only synchronization. 1b = 8 us deglitch time.
3	GPIO6_PU_PD_EN	R/W	1b	Control for GPIO6 pin pull-up/pull-down resistor: (Default from NVM memory) 0b = Pull-up/pull-down resistor disabled 1b = Pull-up/pull-down resistor enabled
2	GPIO6_PU_SEL	R/W	0b	Control for GPIO6 pin pull-up/pull-down resistor: GPIO6_PU_PD_EN must be 1 to select the resistor. (Default from NVM memory) 0b = Pull-down resistor selected 1b = Pull-up resistor selected
1	GPIO6_OD	R/W	1b	GPIO6 signal type when configured to output: (Default from NVM memory) 0b = Push-pull output 1b = Open-drain output
0	GPIO6_DIR	R/W	0b	GPIO6 signal direction: (Default from NVM memory) 0b = Input 1b = Output

Copyright © 2022 Texas Instruments Incorporated

7.7.1.36 GPIO7_CONF Register (Offset = 0x37) [Reset = 0x0A]

GPIO7_CONF is shown in 図 7-90 and described in 表 7-56.

Return to the 表 7-19.

図 7-95. GPIO7_CONF Register

7	6	5	4	3	2	1	0
GPIO7_SEL			GPIO7_DEGLITCH_EN	GPIO7_PU_PD_EN	GPIO7_PU_SEL	GPIO7_OD	GPIO7_DIR
R/W-0b			R/W-0b	R/W-1b	R/W-0b	R/W-1b	R/W-0b

表 7-56. GPIO7_CONF Register Field Descriptions

Bit	Field	Type	Reset	Description
7:5	GPIO7_SEL	R/W	0b	GPIO7 signal function: (Default from NVM memory) 0b = GPIO7 1b = nERR_MCU 10b = REFOUT 11b = VMON1 100b = NSLEEP1 101b = NSLEEP2 110b = WKUP1 111b = WKUP2
4	GPIO7_DEGLITCH_EN	R/W	0b	GPIO7 signal deglitch time when signal direction is input: (Default from NVM memory) 0b = No deglitch, only synchronization. 1b = 8 us deglitch time.
3	GPIO7_PU_PD_EN	R/W	1b	Control for GPIO7 pin pull-up/pull-down resistor: (Default from NVM memory) 0b = Pull-up/pull-down resistor disabled 1b = Pull-up/pull-down resistor enabled
2	GPIO7_PU_SEL	R/W	0b	Control for GPIO7 pin pull-up/pull-down resistor: GPIO7_PU_PD_EN must be 1 to select the resistor. (Default from NVM memory) 0b = Pull-down resistor selected 1b = Pull-up resistor selected
1	GPIO7_OD	R/W	1b	GPIO7 signal type when configured to output: (Default from NVM memory) 0b = Push-pull output 1b = Open-drain output
0	GPIO7_DIR	R/W	0b	GPIO7 signal direction: (Default from NVM memory) 0b = Input 1b = Output

Copyright © 2022 Texas Instruments Incorporated

7.7.1.37 GPIO8_CONF Register (Offset = 0x38) [Reset = 0x0A]

GPIO8_CONF is shown in 図 7-91 and described in 表 7-57.

Return to the 表 7-19.

図 7-96. GPIO8_CONF Register

7	6	5	4	3	2	1	0
GPIO8_SEL			GPIO8_DEGLITCH_EN	GPIO8_PU_PD_EN	GPIO8_PU_SEL	GPIO8_OD	GPIO8_DIR
R/W-0b			R/W-0b	R/W-1b	R/W-0b	R/W-1b	R/W-0b

表 7-57. GPIO8_CONF Register Field Descriptions

Bit	Field	Type	Reset	Description
7:5	GPIO8_SEL	R/W	0b	GPIO8 signal function: (Default from NVM memory) 0b = GPIO8 1b = SCLK_SPMI 10b = VMON2 11b = VMON2 100b = NSLEEP1 101b = NSLEEP2 110b = WKUP1 111b = WKUP2
4	GPIO8_DEGLITCH_EN	R/W	0b	GPIO8 signal deglitch time when signal direction is input: (Default from NVM memory) 0b = No deglitch, only synchronization. 1b = 8 us deglitch time.
3	GPIO8_PU_PD_EN	R/W	1b	Control for GPIO8 pin pull-up/pull-down resistor: (Default from NVM memory) 0b = Pull-up/pull-down resistor disabled 1b = Pull-up/pull-down resistor enabled
2	GPIO8_PU_SEL	R/W	0b	Control for GPIO8 pin pull-up/pull-down resistor: GPIO8_PU_PD_EN must be 1 to select the resistor. (Default from NVM memory) 0b = Pull-down resistor selected 1b = Pull-up resistor selected
1	GPIO8_OD	R/W	1b	GPIO8 signal type when configured to output: (Default from NVM memory) 0b = Push-pull output 1b = Open-drain output
0	GPIO8_DIR	R/W	0b	GPIO8 signal direction: (Default from NVM memory) 0b = Input 1b = Output

Copyright © 2022 Texas Instruments Incorporated

7.7.1.38 GPIO9_CONF Register (Offset = 0x39) [Reset = 0x0A]

GPIO9_CONF is shown in 図 7-92 and described in 表 7-58.

Return to the 表 7-19.

図 7-97. GPIO9_CONF Register

7	6	5	4	3	2	1	0
GPIO9_SEL			GPIO9_DEGLITCH_EN	GPIO9_PU_PD_EN	GPIO9_PU_SEL	GPIO9_OD	GPIO9_DIR
R/W-0b			R/W-0b	R/W-1b	R/W-0b	R/W-1b	R/W-0b

表 7-58. GPIO9_CONF Register Field Descriptions

Bit	Field	Type	Reset	Description
7:5	GPIO9_SEL	R/W	0b	GPIO9 signal function: (Default from NVM memory) 0b = GPIO9 1b = SDATA_SPMI 10b = PGOOD 11b = SYNCCLKIN 100b = NSLEEP1 101b = NSLEEP2 110b = WKUP1 111b = WKUP2
4	GPIO9_DEGLITCH_EN	R/W	0b	GPIO9 signal deglitch time when signal direction is input: (Default from NVM memory) 0b = No deglitch, only synchronization. 1b = 8 us deglitch time.
3	GPIO9_PU_PD_EN	R/W	1b	Control for GPIO9 pin pull-up/pull-down resistor: (Default from NVM memory) 0b = Pull-up/pull-down resistor disabled 1b = Pull-up/pull-down resistor enabled
2	GPIO9_PU_SEL	R/W	0b	Control for GPIO9 pin pull-up/pull-down resistor: GPIO9_PU_PD_EN must be 1 to select the resistor. (Default from NVM memory) 0b = Pull-down resistor selected 1b = Pull-up resistor selected
1	GPIO9_OD	R/W	1b	GPIO9 signal type when configured to output: (Default from NVM memory) 0b = Push-pull output 1b = Open-drain output
0	GPIO9_DIR	R/W	0b	GPIO9 signal direction: (Default from NVM memory) 0b = Input 1b = Output

Copyright © 2022 Texas Instruments Incorporated

7.7.1.39 GPIO10_CONF Register (Offset = 0x3A) [Reset = 0x0A]

GPIO10_CONF is shown in 図 7-93 and described in 表 7-59.

Return to the 表 7-19.

図 7-98. GPIO10_CONF Register

7	6	5	4	3	2	1	0
GPIO10_SEL			GPIO10_DEGLITCH_EN	GPIO10_PU_PD_EN	GPIO10_PU_SEL	GPIO10_OD	GPIO10_DIR
R/W-0b			R/W-0b	R/W-1b	R/W-0b	R/W-1b	R/W-0b

表 7-59. GPIO10_CONF Register Field Descriptions

Bit	Field	Type	Reset	Description
7:5	GPIO10_SEL	R/W	0b	GPIO10 signal function: (Default from NVM memory) 0b = GPIO10 1b = nRSTOUT 10b = nRSTOUT_SOC 11b = nRSTOUT_SOC 100b = NSLEEP1 101b = NSLEEP2 110b = WKUP1 111b = WKUP2
4	GPIO10_DEGLITCH_EN	R/W	0b	GPIO10 signal deglitch time when signal direction is input: (Default from NVM memory) 0b = No deglitch, only synchronization. 1b = 8 us deglitch time.
3	GPIO10_PU_PD_EN	R/W	1b	Control for GPIO10 pin pull-up/pull-down resistor: (Default from NVM memory) 0b = Pull-up/pull-down resistor disabled 1b = Pull-up/pull-down resistor enabled
2	GPIO10_PU_SEL	R/W	0b	Control for GPIO10 pin pull-up/pull-down resistor: GPIO10_PU_PD_EN must be 1 to select the resistor. (Default from NVM memory) 0b = Pull-down resistor selected 1b = Pull-up resistor selected
1	GPIO10_OD	R/W	1b	GPIO10 signal type when configured to output: (Default from NVM memory) 0b = Push-pull output 1b = Open-drain output
0	GPIO10_DIR	R/W	0b	GPIO10 signal direction: (Default from NVM memory) 0b = Input 1b = Output

Copyright © 2022 Texas Instruments Incorporated

7.7.1.40 ENABLE_CONF Register (Offset = 0x3C) [Reset = 0x88]

ENABLE_CONF is shown in 図 7-94 and described in 表 7-60.

Return to the 表 7-19.

図 7-99. ENABLE_CONF Register

7	6	5	4	3	2	1	0
RESERVED		ENABLE_POL	RESERVED				
R/W-10b		R/W-0b	R/W-1000b				

表 7-60. ENABLE_CONF Register Field Descriptions

Bit	Field	Type	Reset	Description
7:6	RESERVED	R/W	10b	
5	ENABLE_POL	R/W	0b	Control for ENABLE pin polarity: (Default from NVM memory) 0b = Active high 1b = Active low
4:0	RESERVED	R/W	1000b	

Copyright © 2022 Texas Instruments Incorporated

7.7.1.41 GPIO_OUT_1 Register (Offset = 0x3D) [Reset = 0x00]

GPIO_OUT_1 is shown in 図 7-95 and described in 表 7-61.

Return to the 表 7-19.

図 7-100. GPIO_OUT_1 Register

7	6	5	4	3	2	1	0
GPIO8_OUT	GPIO7_OUT	GPIO6_OUT	GPIO5_OUT	GPIO4_OUT	GPIO3_OUT	GPIO2_OUT	GPIO1_OUT
R/W-0b	R/W-0b	R/W-0b	R/W-0b	R/W-0b	R/W-0b	R/W-0b	R/W-0b

表 7-61. GPIO_OUT_1 Register Field Descriptions

Bit	Field	Type	Reset	Description
7	GPIO8_OUT	R/W	0b	Control for GPIO8 signal when configured to GPIO Output: (Default from NVM memory) 0b = Low 1b = High
6	GPIO7_OUT	R/W	0b	Control for GPIO7 signal when configured to GPIO Output: (Default from NVM memory) 0b = Low 1b = High
5	GPIO6_OUT	R/W	0b	Control for GPIO6 signal when configured to GPIO Output: (Default from NVM memory) 0b = Low 1b = High
4	GPIO5_OUT	R/W	0b	Control for GPIO5 signal when configured to GPIO Output: (Default from NVM memory) 0b = Low 1b = High
3	GPIO4_OUT	R/W	0b	Control for GPIO4 signal when configured to GPIO Output: (Default from NVM memory) 0b = Low 1b = High
2	GPIO3_OUT	R/W	0b	Control for GPIO3 signal when configured to GPIO Output: (Default from NVM memory) 0b = Low 1b = High
1	GPIO2_OUT	R/W	0b	Control for GPIO2 signal when configured to GPIO Output: (Default from NVM memory) 0b = Low 1b = High
0	GPIO1_OUT	R/W	0b	Control for GPIO1 signal when configured to GPIO Output: (Default from NVM memory) 0b = Low 1b = High

Copyright © 2022 Texas Instruments Incorporated

7.7.1.42 GPIO_OUT_2 Register (Offset = 0x3E) [Reset = 0x00]

GPIO_OUT_2 is shown in 図 7-96 and described in 表 7-62.

Return to the 表 7-19.

図 7-101. GPIO_OUT_2 Register

7	6	5	4	3	2	1	0
RESERVED						GPIO10_OUT	GPIO9_OUT
R/W-0b						R/W-0b	R/W-0b

表 7-62. GPIO_OUT_2 Register Field Descriptions

Bit	Field	Type	Reset	Description
7:2	RESERVED	R/W	0b	
1	GPIO10_OUT	R/W	0b	Control for GPIO10 signal when configured to GPIO Output: (Default from NVM memory) 0b = Low 1b = High
0	GPIO9_OUT	R/W	0b	Control for GPIO9 signal when configured to GPIO Output: (Default from NVM memory) 0b = Low 1b = High

Copyright © 2022 Texas Instruments Incorporated

7.7.1.43 GPIO_IN_1 Register (Offset = 0x3F) [Reset = 0x00]

GPIO_IN_1 is shown in 図 7-97 and described in 表 7-63.

Return to the 表 7-19.

図 7-102. GPIO_IN_1 Register

7	6	5	4	3	2	1	0
GPIO8_IN	GPIO7_IN	GPIO6_IN	GPIO5_IN	GPIO4_IN	GPIO3_IN	GPIO2_IN	GPIO1_IN
R-0b	R-0b	R-0b	R-0b	R-0b	R-0b	R-0b	R-0b

表 7-63. GPIO_IN_1 Register Field Descriptions

Bit	Field	Type	Reset	Description
7	GPIO8_IN	R	0b	Level of GPIO8 signal: 0b = Low 1b = High
6	GPIO7_IN	R	0b	Level of GPIO7 signal: 0b = Low 1b = High
5	GPIO6_IN	R	0b	Level of GPIO6 signal: 0b = Low 1b = High
4	GPIO5_IN	R	0b	Level of GPIO5 signal: 0b = Low 1b = High
3	GPIO4_IN	R	0b	Level of GPIO4 signal: 0b = Low 1b = High
2	GPIO3_IN	R	0b	Level of GPIO3 signal: 0b = Low 1b = High
1	GPIO2_IN	R	0b	Level of GPIO2 signal: 0b = Low 1b = High
0	GPIO1_IN	R	0b	Level of GPIO1 signal: 0b = Low 1b = High

Copyright © 2022 Texas Instruments Incorporated

7.7.1.44 GPIO_IN_2 Register (Offset = 0x40) [Reset = 0x00]

GPIO_IN_2 is shown in 図 7-98 and described in 表 7-64.

Return to the 表 7-19.

図 7-103. GPIO_IN_2 Register

7	6	5	4	3	2	1	0
RESERVED						GPIO10_IN	GPIO9_IN
R-0b						R-0b	R-0b

表 7-64. GPIO_IN_2 Register Field Descriptions

Bit	Field	Type	Reset	Description
7:2	RESERVED	R	0b	
1	GPIO10_IN	R	0b	Level of GPIO10 signal: 0b = Low 1b = High
0	GPIO9_IN	R	0b	Level of GPIO9 signal: 0b = Low 1b = High

Copyright © 2022 Texas Instruments Incorporated

7.7.1.45 RAIL_SEL_1 Register (Offset = 0x41) [Reset = 0x00]

RAIL_SEL_1 is shown in 図 7-99 and described in 表 7-65.

Return to the 表 7-19.

図 7-104. RAIL_SEL_1 Register

7	6	5	4	3	2	1	0
BUCK4_GRP_SEL		BUCK3_GRP_SEL		BUCK2_GRP_SEL		BUCK1_GRP_SEL	
R/W-0b		R/W-0b		R/W-0b		R/W-0b	

表 7-65. RAIL_SEL_1 Register Field Descriptions

Bit	Field	Type	Reset	Description
7:6	BUCK4_GRP_SEL	R/W	0b	Rail group selection for BUCK4: (Default from NVM memory) 0b = No group assigned 1b = MCU rail group 10b = SOC rail group 11b = OTHER rail group
5:4	BUCK3_GRP_SEL	R/W	0b	Rail group selection for BUCK3: (Default from NVM memory) 0b = No group assigned 1b = MCU rail group 10b = SOC rail group 11b = OTHER rail group
3:2	BUCK2_GRP_SEL	R/W	0b	Rail group selection for BUCK2: (Default from NVM memory) 0b = No group assigned 1b = MCU rail group 10b = SOC rail group 11b = OTHER rail group
1:0	BUCK1_GRP_SEL	R/W	0b	Rail group selection for BUCK1: (Default from NVM memory) 0b = No group assigned 1b = MCU rail group 10b = SOC rail group 11b = OTHER rail group

Copyright © 2022 Texas Instruments Incorporated

7.7.1.46 RAIL_SEL_3 Register (Offset = 0x43) [Reset = 0x00]

RAIL_SEL_3 is shown in 図 7-100 and described in 表 7-66.

Return to the 表 7-19.

図 7-105. RAIL_SEL_3 Register

7	6	5	4	3	2	1	0
VMON2_GRP_SEL		VMON1_GRP_SEL		VCCA_GRP_SEL		RESERVED	
R/W-0b		R/W-0b		R/W-0b		R/W-0b	

表 7-66. RAIL_SEL_3 Register Field Descriptions

Bit	Field	Type	Reset	Description
7:6	VMON2_GRP_SEL	R/W	0b	Rail group selection for VMON2 monitoring: (Default from NVM memory) 0b = No group assigned 1b = MCU rail group 10b = SOC rail group 11b = OTHER rail group
5:4	VMON1_GRP_SEL	R/W	0b	Rail group selection for VMON1 monitoring: (Default from NVM memory) 0b = No group assigned 1b = MCU rail group 10b = SOC rail group 11b = OTHER rail group
3:2	VCCA_GRP_SEL	R/W	0b	Rail group selection for VCCA monitoring: (Default from NVM memory) 0b = No group assigned 1b = MCU rail group 10b = SOC rail group 11b = OTHER rail group
1:0	RESERVED	R/W	0b	

Copyright © 2022 Texas Instruments Incorporated

7.7.1.47 FSM_TRIG_SEL_1 Register (Offset = 0x44) [Reset = 0x00]

FSM_TRIG_SEL_1 is shown in 図 7-101 and described in 表 7-67.

Return to the 表 7-19.

図 7-106. FSM_TRIG_SEL_1 Register

7	6	5	4	3	2	1	0
SEVERE_ERR_TRIG		OTHER_RAIL_TRIG		SOC_RAIL_TRIG		MCU_RAIL_TRIG	
R/W-0b		R/W-0b		R/W-0b		R/W-0b	

表 7-67. FSM_TRIG_SEL_1 Register Field Descriptions

Bit	Field	Type	Reset	Description
7:6	SEVERE_ERR_TRIG	R/W	0b	Trigger selection for Severe Error: (Default from NVM memory) 0b = Immediate shutdown 1b = Orderly shutdown 10b = MCU power error 11b = SOC power error
5:4	OTHER_RAIL_TRIG	R/W	0b	Trigger selection for OTHER rail group: (Default from NVM memory) 0b = Immediate shutdown 1b = Orderly shutdown 10b = MCU power error 11b = SOC power error
3:2	SOC_RAIL_TRIG	R/W	0b	Trigger selection for SOC rail group: (Default from NVM memory) 0b = Immediate shutdown 1b = Orderly shutdown 10b = MCU power error 11b = SOC power error
1:0	MCU_RAIL_TRIG	R/W	0b	Trigger selection for MCU rail group: (Default from NVM memory) 0b = Immediate shutdown 1b = Orderly shutdown 10b = MCU power error 11b = SOC power error

Copyright © 2022 Texas Instruments Incorporated

7.7.1.48 FSM_TRIG_SEL_2 Register (Offset = 0x45) [Reset = 0x00]

FSM_TRIG_SEL_2 is shown in 図 7-102 and described in 表 7-68.

Return to the 表 7-19.

図 7-107. FSM_TRIG_SEL_2 Register

7	6	5	4	3	2	1	0
RESERVED						MODERATE_ERR_TRIG	
R/W-0b						R/W-0b	

表 7-68. FSM_TRIG_SEL_2 Register Field Descriptions

Bit	Field	Type	Reset	Description
7:2	RESERVED	R/W	0b	
1:0	MODERATE_ERR_TRIG	R/W	0b	Trigger selection for Moderate Error: (Default from NVM memory) 0b = Immediate shutdown 1b = Orderly shutdown 10b = MCU power error 11b = SOC power error

Copyright © 2022 Texas Instruments Incorporated

7.7.1.49 FSM_TRIG_MASK_1 Register (Offset = 0x46) [Reset = 0x00]

FSM_TRIG_MASK_1 is shown in 図 7-103 and described in 表 7-69.

Return to the 表 7-19.

図 7-108. FSM_TRIG_MASK_1 Register

7	6	5	4	3	2	1	0
GPIO4_FSM_MASK_POL	GPIO4_FSM_MASK	GPIO3_FSM_MASK_POL	GPIO3_FSM_MASK	GPIO2_FSM_MASK_POL	GPIO2_FSM_MASK	GPIO1_FSM_MASK_POL	GPIO1_FSM_MASK
R/W-0b	R/W-0b	R/W-0b	R/W-0b	R/W-0b	R/W-0b	R/W-0b	R/W-0b

表 7-69. FSM_TRIG_MASK_1 Register Field Descriptions

Bit	Field	Type	Reset	Description
7	GPIO4_FSM_MASK_POL	R/W	0b	FSM trigger masking polarity select for GPIOx: (Default from NVM memory) 0b = Masking sets signal value to '0' 1b = Masking sets signal value to '1'
6	GPIO4_FSM_MASK	R/W	0b	FSM trigger mask for GPIOx: (Default from NVM memory) 0b = Not masked 1b = Masked
5	GPIO3_FSM_MASK_POL	R/W	0b	FSM trigger masking polarity select for GPIOx: (Default from NVM memory) 0b = Masking sets signal value to '0' 1b = Masking sets signal value to '1'
4	GPIO3_FSM_MASK	R/W	0b	FSM trigger mask for GPIOx: (Default from NVM memory) 0b = Not masked 1b = Masked
3	GPIO2_FSM_MASK_POL	R/W	0b	FSM trigger masking polarity select for GPIOx: (Default from NVM memory) 0b = Masking sets signal value to '0' 1b = Masking sets signal value to '1'
2	GPIO2_FSM_MASK	R/W	0b	FSM trigger mask for GPIOx: (Default from NVM memory) 0b = Not masked 1b = Masked
1	GPIO1_FSM_MASK_POL	R/W	0b	FSM trigger masking polarity select for GPIOx: (Default from NVM memory) 0b = Masking sets signal value to '0' 1b = Masking sets signal value to '1'
0	GPIO1_FSM_MASK	R/W	0b	FSM trigger mask for GPIOx: (Default from NVM memory) 0b = Not masked 1b = Masked

Copyright © 2022 Texas Instruments Incorporated

7.7.1.50 FSM_TRIG_MASK_2 Register (Offset = 0x47) [Reset = 0x00]

FSM_TRIG_MASK_2 is shown in 図 7-104 and described in 表 7-70.

Return to the 表 7-19.

図 7-109. FSM_TRIG_MASK_2 Register

7	6	5	4	3	2	1	0
GPIO8_FSM_MASK_POL	GPIO8_FSM_MASK	GPIO7_FSM_MASK_POL	GPIO7_FSM_MASK	GPIO6_FSM_MASK_POL	GPIO6_FSM_MASK	GPIO5_FSM_MASK_POL	GPIO5_FSM_MASK
R/W-0b	R/W-0b	R/W-0b	R/W-0b	R/W-0b	R/W-0b	R/W-0b	R/W-0b

表 7-70. FSM_TRIG_MASK_2 Register Field Descriptions

Bit	Field	Type	Reset	Description
7	GPIO8_FSM_MASK_POL	R/W	0b	FSM trigger masking polarity select for GPIOx: (Default from NVM memory) 0b = Masking sets signal value to '0' 1b = Masking sets signal value to '1'
6	GPIO8_FSM_MASK	R/W	0b	FSM trigger mask for GPIOx: (Default from NVM memory) 0b = Not masked 1b = Masked
5	GPIO7_FSM_MASK_POL	R/W	0b	FSM trigger masking polarity select for GPIOx: (Default from NVM memory) 0b = Masking sets signal value to '0' 1b = Masking sets signal value to '1'
4	GPIO7_FSM_MASK	R/W	0b	FSM trigger mask for GPIOx: (Default from NVM memory) 0b = Not masked 1b = Masked
3	GPIO6_FSM_MASK_POL	R/W	0b	FSM trigger masking polarity select for GPIOx: (Default from NVM memory) 0b = Masking sets signal value to '0' 1b = Masking sets signal value to '1'
2	GPIO6_FSM_MASK	R/W	0b	FSM trigger mask for GPIOx: (Default from NVM memory) 0b = Not masked 1b = Masked
1	GPIO5_FSM_MASK_POL	R/W	0b	FSM trigger masking polarity select for GPIOx: (Default from NVM memory) 0b = Masking sets signal value to '0' 1b = Masking sets signal value to '1'
0	GPIO5_FSM_MASK	R/W	0b	FSM trigger mask for GPIOx: (Default from NVM memory) 0b = Not masked 1b = Masked

Copyright © 2022 Texas Instruments Incorporated

7.7.1.51 FSM_TRIG_MASK_3 Register (Offset = 0x48) [Reset = 0x00]

FSM_TRIG_MASK_3 is shown in 図 7-105 and described in 表 7-71.

Return to the 表 7-19.

図 7-110. FSM_TRIG_MASK_3 Register

7	6	5	4	3	2	1	0
RESERVED				GPIO10_FSM_MASK_POL	GPIO10_FSM_MASK	GPIO9_FSM_MASK_POL	GPIO9_FSM_MASK
R/W-0b				R/W-0b	R/W-0b	R/W-0b	R/W-0b

表 7-71. FSM_TRIG_MASK_3 Register Field Descriptions

Bit	Field	Type	Reset	Description
7:4	RESERVED	R/W	0b	
3	GPIO10_FSM_MASK_POL	R/W	0b	FSM trigger masking polarity select for GPIOx: (Default from NVM memory) 0b = Masking sets signal value to '0' 1b = Masking sets signal value to '1'
2	GPIO10_FSM_MASK	R/W	0b	FSM trigger mask for GPIOx: (Default from NVM memory) 0b = Not masked 1b = Masked
1	GPIO9_FSM_MASK_POL	R/W	0b	FSM trigger masking polarity select for GPIOx: (Default from NVM memory) 0b = Masking sets signal value to '0' 1b = Masking sets signal value to '1'
0	GPIO9_FSM_MASK	R/W	0b	FSM trigger mask for GPIOx: (Default from NVM memory) 0b = Not masked 1b = Masked

Copyright © 2022 Texas Instruments Incorporated

7.7.1.52 MASK_BUCK1_2 Register (Offset = 0x49) [Reset = 0x00]

MASK_BUCK1_2 is shown in 図 7-106 and described in 表 7-72.

Return to the 表 7-19.

図 7-111. MASK_BUCK1_2 Register

7	6	5	4	3	2	1	0
BUCK2_ILIM_MASK	RESERVED	BUCK2_UV_MASK	BUCK2_OV_MASK	BUCK1_ILIM_MASK	RESERVED	BUCK1_UV_MASK	BUCK1_OV_MASK
R/W-0b	R/W-0b	R/W-0b	R/W-0b	R/W-0b	R/W-0b	R/W-0b	R/W-0b

表 7-72. MASK_BUCK1_2 Register Field Descriptions

Bit	Field	Type	Reset	Description
7	BUCK2_ILIM_MASK	R/W	0b	Masking for BUCK2 current monitoring interrupt BUCK2_ILIM_INT: (Default from NVM memory) 0b = Interrupt generated 1b = Interrupt not generated.
6	RESERVED	R/W	0b	
5	BUCK2_UV_MASK	R/W	0b	Masking of BUCK2 under-voltage detection interrupt BUCK2_UV_INT: (Default from NVM memory) 0b = Interrupt generated 1b = Interrupt not generated.
4	BUCK2_OV_MASK	R/W	0b	Masking of BUCK2 over-voltage detection interrupt BUCK2_OV_INT: (Default from NVM memory) 0b = Interrupt generated 1b = Interrupt not generated.
3	BUCK1_ILIM_MASK	R/W	0b	Masking for BUCK1 current monitoring interrupt BUCK1_ILIM_INT: (Default from NVM memory) 0b = Interrupt generated 1b = Interrupt not generated.
2	RESERVED	R/W	0b	
1	BUCK1_UV_MASK	R/W	0b	Masking of BUCK1 under-voltage detection interrupt BUCK1_UV_INT: (Default from NVM memory) 0b = Interrupt generated 1b = Interrupt not generated.
0	BUCK1_OV_MASK	R/W	0b	Masking of BUCK1 over-voltage detection interrupt BUCK1_OV_INT: (Default from NVM memory) 0b = Interrupt generated 1b = Interrupt not generated.

Copyright © 2022 Texas Instruments Incorporated

7.7.1.53 MASK_BUCK3_4 Register (Offset = 0x4A) [Reset = 0x00]

MASK_BUCK3_4 is shown in 図 7-107 and described in 表 7-73.

Return to the 表 7-19.

図 7-112. MASK_BUCK3_4 Register

7	6	5	4	3	2	1	0
BUCK4_ILIM_MASK	RESERVED	BUCK4_UV_MASK	BUCK4_OV_MASK	BUCK3_ILIM_MASK	RESERVED	BUCK3_UV_MASK	BUCK3_OV_MASK
R/W-0b	R/W-0b	R/W-0b	R/W-0b	R/W-0b	R/W-0b	R/W-0b	R/W-0b

表 7-73. MASK_BUCK3_4 Register Field Descriptions

Bit	Field	Type	Reset	Description
7	BUCK4_ILIM_MASK	R/W	0b	Masking for BUCK4 current monitoring interrupt BUCK4_ILIM_INT: (Default from NVM memory) 0b = Interrupt generated 1b = Interrupt not generated.
6	RESERVED	R/W	0b	
5	BUCK4_UV_MASK	R/W	0b	Masking of BUCK4 under-voltage detection interrupt BUCK4_UV_INT: (Default from NVM memory) 0b = Interrupt generated 1b = Interrupt not generated.
4	BUCK4_OV_MASK	R/W	0b	Masking of BUCK4 over-voltage detection interrupt BUCK4_OV_INT: (Default from NVM memory) 0b = Interrupt generated 1b = Interrupt not generated.
3	BUCK3_ILIM_MASK	R/W	0b	Masking for BUCK3 current monitoring interrupt BUCK3_ILIM_INT: (Default from NVM memory) 0b = Interrupt generated 1b = Interrupt not generated.
2	RESERVED	R/W	0b	
1	BUCK3_UV_MASK	R/W	0b	Masking of BUCK3 under-voltage detection interrupt BUCK3_UV_INT: (Default from NVM memory) 0b = Interrupt generated 1b = Interrupt not generated.
0	BUCK3_OV_MASK	R/W	0b	Masking of BUCK3 over-voltage detection interrupt BUCK3_OV_INT: (Default from NVM memory) 0b = Interrupt generated 1b = Interrupt not generated.

Copyright © 2022 Texas Instruments Incorporated

7.7.1.54 MASK_VMON Register (Offset = 0x4E) [Reset = 0x00]

MASK_VMON is shown in 図 7-108 and described in 表 7-74.

Return to the 表 7-19.

図 7-113. MASK_VMON Register

7	6	5	4	3	2	1	0
RESERVED	VMON2_UV_MASK	VMON2_OV_MASK	RESERVED	VMON1_UV_MASK	VMON1_OV_MASK	VCCA_UV_MASK	VCCA_OV_MASK
R/W-0b	R/W-0b	R/W-0b	R/W-0b	R/W-0b	R/W-0b	R/W-0b	R/W-0b

表 7-74. MASK_VMON Register Field Descriptions

Bit	Field	Type	Reset	Description
7	RESERVED	R/W	0b	
6	VMON2_UV_MASK	R/W	0b	Masking of VMON2 under-voltage detection interrupt VMON2_UV_INT: (Default from NVM memory) 0b = Interrupt generated 1b = Interrupt not generated.
5	VMON2_OV_MASK	R/W	0b	Masking of VMON2 over-voltage detection interrupt VMON2_OV_INT: (Default from NVM memory) 0b = Interrupt generated 1b = Interrupt not generated.
4	RESERVED	R/W	0b	
3	VMON1_UV_MASK	R/W	0b	Masking of VMON1 under-voltage detection interrupt VMON1_UV_INT: (Default from NVM memory) 0b = Interrupt generated 1b = Interrupt not generated.
2	VMON1_OV_MASK	R/W	0b	Masking of VMON1 over-voltage detection interrupt VMON1_OV_INT: (Default from NVM memory) 0b = Interrupt generated 1b = Interrupt not generated.
1	VCCA_UV_MASK	R/W	0b	Masking of VCCA under-voltage detection interrupt VCCA_UV_INT: (Default from NVM memory) 0b = Interrupt generated 1b = Interrupt not generated.
0	VCCA_OV_MASK	R/W	0b	Masking of VCCA over-voltage detection interrupt VCCA_OV_INT: (Default from NVM memory) 0b = Interrupt generated 1b = Interrupt not generated.

Copyright © 2022 Texas Instruments Incorporated

7.7.1.55 MASK_GPIO1_8_FALL Register (Offset = 0x4F) [Reset = 0x00]

MASK_GPIO1_8_FALL is shown in 図 7-109 and described in 表 7-75.

Return to the 表 7-19.

図 7-114. MASK_GPIO1_8_FALL Register

7	6	5	4	3	2	1	0
GPIO8_FALL_MASK	GPIO7_FALL_MASK	GPIO6_FALL_MASK	GPIO5_FALL_MASK	GPIO4_FALL_MASK	GPIO3_FALL_MASK	GPIO2_FALL_MASK	GPIO1_FALL_MASK
R/W-0b	R/W-0b	R/W-0b	R/W-0b	R/W-0b	R/W-0b	R/W-0b	R/W-0b

表 7-75. MASK_GPIO1_8_FALL Register Field Descriptions

Bit	Field	Type	Reset	Description
7	GPIO8_FALL_MASK	R/W	0b	Masking of interrupt for GPIO8 low state transition: This bit does not affect GPIO8_IN status bit in GPIO_IN_1 register. (Default from NVM memory) 0b = Interrupt generated 1b = Interrupt not generated.
6	GPIO7_FALL_MASK	R/W	0b	Masking of interrupt for GPIO7 low state transition: This bit does not affect GPIO7_IN status bit in GPIO_IN_1 register. (Default from NVM memory) 0b = Interrupt generated 1b = Interrupt not generated.
5	GPIO6_FALL_MASK	R/W	0b	Masking of interrupt for GPIO6 low state transition: This bit does not affect GPIO6_IN status bit in GPIO_IN_1 register. (Default from NVM memory) 0b = Interrupt generated 1b = Interrupt not generated.
4	GPIO5_FALL_MASK	R/W	0b	Masking of interrupt for GPIO5 low state transition: This bit does not affect GPIO5_IN status bit in GPIO_IN_1 register. (Default from NVM memory) 0b = Interrupt generated 1b = Interrupt not generated.
3	GPIO4_FALL_MASK	R/W	0b	Masking of interrupt for GPIO4 low state transition: This bit does not affect GPIO4_IN status bit in GPIO_IN_1 register. (Default from NVM memory) 0b = Interrupt generated 1b = Interrupt not generated.
2	GPIO3_FALL_MASK	R/W	0b	Masking of interrupt for GPIO3 low state transition: This bit does not affect GPIO3_IN status bit in GPIO_IN_1 register. (Default from NVM memory) 0b = Interrupt generated 1b = Interrupt not generated.
1	GPIO2_FALL_MASK	R/W	0b	Masking of interrupt for GPIO2 low state transition: This bit does not affect GPIO2_IN status bit in GPIO_IN_1 register. (Default from NVM memory) 0b = Interrupt generated 1b = Interrupt not generated.
0	GPIO1_FALL_MASK	R/W	0b	Masking of interrupt for GPIO1 low state transition: This bit does not affect GPIO1_IN status bit in GPIO_IN_1 register. (Default from NVM memory) 0b = Interrupt generated 1b = Interrupt not generated.

Copyright © 2022 Texas Instruments Incorporated

7.7.1.56 MASK_GPIO1_8_RISE Register (Offset = 0x50) [Reset = 0x00]

MASK_GPIO1_8_RISE is shown in 図 7-110 and described in 表 7-76.

Return to the 表 7-19.

図 7-115. MASK_GPIO1_8_RISE Register

7	6	5	4	3	2	1	0
GPIO8_RISE_MASK	GPIO7_RISE_MASK	GPIO6_RISE_MASK	GPIO5_RISE_MASK	GPIO4_RISE_MASK	GPIO3_RISE_MASK	GPIO2_RISE_MASK	GPIO1_RISE_MASK
R/W-0b	R/W-0b	R/W-0b	R/W-0b	R/W-0b	R/W-0b	R/W-0b	R/W-0b

表 7-76. MASK_GPIO1_8_RISE Register Field Descriptions

Bit	Field	Type	Reset	Description
7	GPIO8_RISE_MASK	R/W	0b	Masking of interrupt for GPIO8 high state transition: This bit does not affect GPIO8_IN status bit in GPIO_IN_1 register. (Default from NVM memory) 0b = Interrupt generated 1b = Interrupt not generated.
6	GPIO7_RISE_MASK	R/W	0b	Masking of interrupt for GPIO7 high state transition: This bit does not affect GPIO7_IN status bit in GPIO_IN_1 register. (Default from NVM memory) 0b = Interrupt generated 1b = Interrupt not generated.
5	GPIO6_RISE_MASK	R/W	0b	Masking of interrupt for GPIO6 high state transition: This bit does not affect GPIO6_IN status bit in GPIO_IN_1 register. (Default from NVM memory) 0b = Interrupt generated 1b = Interrupt not generated.
4	GPIO5_RISE_MASK	R/W	0b	Masking of interrupt for GPIO5 high state transition: This bit does not affect GPIO5_IN status bit in GPIO_IN_1 register. (Default from NVM memory) 0b = Interrupt generated 1b = Interrupt not generated.
3	GPIO4_RISE_MASK	R/W	0b	Masking of interrupt for GPIO4 high state transition: This bit does not affect GPIO4_IN status bit in GPIO_IN_1 register. (Default from NVM memory) 0b = Interrupt generated 1b = Interrupt not generated.
2	GPIO3_RISE_MASK	R/W	0b	Masking of interrupt for GPIO3 high state transition: This bit does not affect GPIO3_IN status bit in GPIO_IN_1 register. (Default from NVM memory) 0b = Interrupt generated 1b = Interrupt not generated.
1	GPIO2_RISE_MASK	R/W	0b	Masking of interrupt for GPIO2 high state transition: This bit does not affect GPIO2_IN status bit in GPIO_IN_1 register. (Default from NVM memory) 0b = Interrupt generated 1b = Interrupt not generated.
0	GPIO1_RISE_MASK	R/W	0b	Masking of interrupt for GPIO1 high state transition: This bit does not affect GPIO1_IN status bit in GPIO_IN_1 register. (Default from NVM memory) 0b = Interrupt generated 1b = Interrupt not generated.

Copyright © 2022 Texas Instruments Incorporated

7.7.1.57 MASK_GPIO9_10 Register (Offset = 0x51) [Reset = 0x00]

MASK_GPIO9_10 is shown in 図 7-111 and described in 表 7-77.

Return to the 表 7-19.

図 7-116. MASK_GPIO9_10 Register

7	6	5	4	3	2	1	0
RESERVED			GPIO10_RISE_MASK	GPIO9_RISE_MASK	RESERVED	GPIO10_FALL_MASK	GPIO9_FALL_MASK
R/W-0b			R/W-0b	R/W-0b	R/W-0b	R/W-0b	R/W-0b

表 7-77. MASK_GPIO9_10 Register Field Descriptions

Bit	Field	Type	Reset	Description
7:5	RESERVED	R/W	0b	
4	GPIO10_RISE_MASK	R/W	0b	Masking of interrupt for GPIO10 high state transition: This bit does not affect GPIO10_IN status bit in GPIO_IN_2 register. (Default from NVM memory) 0b = Interrupt generated 1b = Interrupt not generated.
3	GPIO9_RISE_MASK	R/W	0b	Masking of interrupt for GPIO9 high state transition: This bit does not affect GPIO9_IN status bit in GPIO_IN_2 register. (Default from NVM memory) 0b = Interrupt generated 1b = Interrupt not generated.
2	RESERVED	R/W	0b	
1	GPIO10_FALL_MASK	R/W	0b	Masking of interrupt for GPIO10 low state transition: This bit does not affect GPIO10_IN status bit in GPIO_IN_2 register. (Default from NVM memory) 0b = Interrupt generated 1b = Interrupt not generated.
0	GPIO9_FALL_MASK	R/W	0b	Masking of interrupt for GPIO9 low state transition: This bit does not affect GPIO9_IN status bit in GPIO_IN_2 register. (Default from NVM memory) 0b = Interrupt generated 1b = Interrupt not generated.

Copyright © 2022 Texas Instruments Incorporated

7.7.1.58 MASK_STARTUP Register (Offset = 0x52) [Reset = 0x00]

MASK_STARTUP is shown in 図 7-112 and described in 表 7-78.

Return to the 表 7-19.

図 7-117. MASK_STARTUP Register

7	6	5	4	3	2	1	0
RESERVED		SOFT_REBOOT_MASK	FSD_MASK	RESERVED		ENABLE_MASK	RESERVED
R/W-0b		R/W-0b	R/W-0b	R/W-0b		R/W-0b	R/W-0b

表 7-78. MASK_STARTUP Register Field Descriptions

Bit	Field	Type	Reset	Description
7:6	RESERVED	R/W	0b	
5	SOFT_REBOOT_MASK	R/W	0b	Masking of SOFT_REBOOT_INT interrupt: (Default from NVM memory) 0b = Interrupt generated 1b = Interrupt not generated.
4	FSD_MASK	R/W	0b	Masking of FSD_INT interrupt: (Default from NVM memory) 0b = Interrupt generated 1b = Interrupt not generated.
3:2	RESERVED	R/W	0b	
1	ENABLE_MASK	R/W	0b	Masking of ENABLE_INT interrupt: (Default from NVM memory) 0b = Interrupt generated 1b = Interrupt not generated.
0	RESERVED	R/W	0b	

Copyright © 2022 Texas Instruments Incorporated

7.7.1.59 MASK_MISC Register (Offset = 0x53) [Reset = 0x00]

MASK_MISC is shown in 図 7-113 and described in 表 7-79.

Return to the 表 7-19.

図 7-118. MASK_MISC Register

7	6	5	4	3	2	1	0
RESERVED				TWARN_MASK	RESERVED	EXT_CLK_MASK	BIST_PASS_MASK
R/W-0b				R/W-0b	R/W-0b	R/W-0b	R/W-0b

表 7-79. MASK_MISC Register Field Descriptions

Bit	Field	Type	Reset	Description
7:4	RESERVED	R/W	0b	
3	TWARN_MASK	R/W	0b	Masking of TWARN_INT interrupt: (Default from NVM memory) 0b = Interrupt generated 1b = Interrupt not generated.
2	RESERVED	R/W	0b	
1	EXT_CLK_MASK	R/W	0b	Masking of EXT_CLK_INT interrupt: (Default from NVM memory) 0b = Interrupt generated 1b = Interrupt not generated.
0	BIST_PASS_MASK	R/W	0b	Masking of BIST_PASS_INT interrupt: (Default from NVM memory) 0b = Interrupt generated 1b = Interrupt not generated.

7.7.1.60 MASK_MODERATE_ERR Register (Offset = 0x54) [Reset = 0x00]

MASK_MODERATE_ERR is shown in 図 7-114 and described in 表 7-80.

Return to the 表 7-19.

図 7-119. MASK_MODERATE_ERR Register

7	6	5	4	3	2	1	0
NRSTOUT_READBACK_MASK	NINT_READBACK_MASK	RESERVED	SPMI_ERR_MASK	RESERVED	REG_CRC_ERR_MASK	BIST_FAIL_MASK	RESERVED
R/W-0b	R/W-0b	R/W-0b	R/W-0b	R/W-0b	R/W-0b	R/W-0b	R/W-0b

表 7-80. MASK_MODERATE_ERR Register Field Descriptions

Bit	Field	Type	Reset	Description
7	NRSTOUT_READBACK_MASK	R/W	0b	Masking of NRSTOUT_READBACK_INT interrupt: (Default from NVM memory) 0b = Interrupt generated 1b = Interrupt not generated.
6	NINT_READBACK_MASK	R/W	0b	Masking of NINT_READBACK_INT interrupt: (Default from NVM memory) 0b = Interrupt generated 1b = Interrupt not generated.
5	RESERVED	R/W	0b	
4	SPMI_ERR_MASK	R/W	0b	Masking of SPMI_ERR_INT interrupt: (Default from NVM memory) 0b = Interrupt generated 1b = Interrupt not generated.
3	RESERVED	R/W	0b	
2	REG_CRC_ERR_MASK	R/W	0b	Masking of REG_CRC_ERR_INT interrupt: (Default from NVM memory) 0b = Interrupt generated 1b = Interrupt not generated.
1	BIST_FAIL_MASK	R/W	0b	Masking of BIST_FAIL_INT interrupt: (Default from NVM memory) 0b = Interrupt generated 1b = Interrupt not generated.
0	RESERVED	R/W	0b	

Copyright © 2022 Texas Instruments Incorporated

7.7.1.61 MASK_FSM_ERR Register (Offset = 0x56) [Reset = 0x00]

MASK_FSM_ERR is shown in 図 7-115 and described in 表 7-81.

Return to the 表 7-19.

図 7-120. MASK_FSM_ERR Register

7	6	5	4	3	2	1	0
RESERVED				SOC_PWR_ERR_MASK	MCU_PWR_ERR_MASK	ORD_SHUTDOWN_MASK	IMM_SHUTDOWN_MASK
R/W-0b				R/W-0b	R/W-0b	R/W-0b	R/W-0b

表 7-81. MASK_FSM_ERR Register Field Descriptions

Bit	Field	Type	Reset	Description
7:4	RESERVED	R/W	0b	
3	SOC_PWR_ERR_MASK	R/W	0b	Masking of SOC_PWR_ERR_INT interrupt: (Default from NVM memory) 0b = Interrupt generated 1b = Interrupt not generated.
2	MCU_PWR_ERR_MASK	R/W	0b	Masking of MCU_PWR_ERR_INT interrupt: (Default from NVM memory) 0b = Interrupt generated 1b = Interrupt not generated.
1	ORD_SHUTDOWN_MASK	R/W	0b	Masking of ORD_SHUTDOWN_INT interrupt: (Default from NVM memory) 0b = Interrupt generated 1b = Interrupt not generated.
0	IMM_SHUTDOWN_MASK	R/W	0b	Masking of IMM_SHUTDOWN_INT interrupt: (Default from NVM memory) 0b = Interrupt generated 1b = Interrupt not generated.

Copyright © 2022 Texas Instruments Incorporated

7.7.1.62 MASK_COMM_ERR Register (Offset = 0x57) [Reset = 0x00]

MASK_COMM_ERR is shown in 図 7-116 and described in 表 7-82.

Return to the 表 7-19.

図 7-121. MASK_COMM_ERR Register

7	6	5	4	3	2	1	0
I2C2_ADR_ERR_MASK	RESERVED	I2C2_CRC_ERR_MASK	RESERVED	COMM_ADR_ERR_MASK	RESERVED	COMM_CRC_ERR_MASK	COMM_FRM_ERR_MASK
R/W-0b	R/W-0b	R/W-0b	R/W-0b	R/W-0b	R/W-0b	R/W-0b	R/W-0b

表 7-82. MASK_COMM_ERR Register Field Descriptions

Bit	Field	Type	Reset	Description
7	I2C2_ADR_ERR_MASK	R/W	0b	Masking of I2C2_ADR_ERR_INT interrupt: (Default from NVM memory) 0b = Interrupt generated 1b = Interrupt not generated.
6	RESERVED	R/W	0b	
5	I2C2_CRC_ERR_MASK	R/W	0b	Masking of I2C2_CRC_ERR_INT interrupt: (Default from NVM memory) 0b = Interrupt generated 1b = Interrupt not generated.
4	RESERVED	R/W	0b	
3	COMM_ADR_ERR_MASK	R/W	0b	Masking of COMM_ADR_ERR_INT interrupt: (Default from NVM memory) 0b = Interrupt generated 1b = Interrupt not generated.
2	RESERVED	R/W	0b	
1	COMM_CRC_ERR_MASK	R/W	0b	Masking of COMM_CRC_ERR_INT interrupt: (Default from NVM memory) 0b = Interrupt generated 1b = Interrupt not generated.
0	COMM_FRM_ERR_MASK	R/W	0b	Masking of COMM_FRM_ERR_INT interrupt: (Default from NVM memory) 0b = Interrupt generated 1b = Interrupt not generated.

Copyright © 2022 Texas Instruments Incorporated

7.7.1.63 MASK_READBACK_ERR Register (Offset = 0x58) [Reset = 0x00]

MASK_READBACK_ERR is shown in 図 7-117 and described in 表 7-83.

Return to the 表 7-19.

図 7-122. MASK_READBACK_ERR Register

7	6	5	4	3	2	1	0
RESERVED				NRSTOUT_SOC_READBACK_MASK	RESERVED		EN_DRV_READBACK_MASK
R/W-0b				R/W-0b	R/W-0b		R/W-0b

表 7-83. MASK_READBACK_ERR Register Field Descriptions

Bit	Field	Type	Reset	Description
7:4	RESERVED	R/W	0b	
3	NRSTOUT_SOC_READBACK_MASK	R/W	0b	Masking of NRSTOUT_SOC_READBACK_INT interrupt: (Default from NVM memory) 0b = Interrupt generated 1b = Interrupt not generated.
2:1	RESERVED	R/W	0b	
0	EN_DRV_READBACK_MASK	R/W	0b	Masking of EN_DRV_READBACK_INT interrupt: (Default from NVM memory) 0b = Interrupt generated 1b = Interrupt not generated.

Copyright © 2022 Texas Instruments Incorporated

7.7.1.64 MASK_ESM Register (Offset = 0x59) [Reset = 0x00]

MASK_ESM is shown in 図 7-118 and described in 表 7-84.

Return to the 表 7-19.

図 7-123. MASK_ESM Register

7	6	5	4	3	2	1	0
RESERVED		ESM_MCU_RST_MASK	ESM_MCU_FAIL_MASK	ESM_MCU_PIN_MASK	RESERVED		
R/W-0b		R/W-0b	R/W-0b	R/W-0b	R/W-0b		

表 7-84. MASK_ESM Register Field Descriptions

Bit	Field	Type	Reset	Description
7:6	RESERVED	R/W	0b	
5	ESM_MCU_RST_MASK	R/W	0b	Masking of ESM_MCU_RST_INT interrupt: (Default from NVM memory) 0b = Interrupt generated 1b = Interrupt not generated.
4	ESM_MCU_FAIL_MASK	R/W	0b	Masking of ESM_MCU_FAIL_INT interrupt: (Default from NVM memory) 0b = Interrupt generated 1b = Interrupt not generated.
3	ESM_MCU_PIN_MASK	R/W	0b	Masking of ESM_MCU_PIN_INT interrupt: (Default from NVM memory) 0b = Interrupt generated 1b = Interrupt not generated.
2:0	RESERVED	R/W	0b	

Copyright © 2022 Texas Instruments Incorporated

7.7.1.65 INT_TOP Register (Offset = 0x5A) [Reset = 0x00]

INT_TOP is shown in 図 7-119 and described in 表 7-85.

Return to the 表 7-19.

図 7-124. INT_TOP Register

7	6	5	4	3	2	1	0
FSM_ERR_INT	SEVERE_ERR_INT	MODERATE_ERR_INT	MISC_INT	STARTUP_INT	GPIO_INT	VMON_INT	BUCK_INT
R-0b	R-0b	R-0b	R-0b	R-0b	R-0b	R-0b	R-0b

表 7-85. INT_TOP Register Field Descriptions

Bit	Field	Type	Reset	Description
7	FSM_ERR_INT	R	0b	Interrupt indicating that INT_FSM_ERR register has pending interrupt. The reason for the interrupt is indicated in INT_FSM_ERR register. This bit is cleared automatically when INT_FSM_ERR register is cleared to 0x00.
6	SEVERE_ERR_INT	R	0b	Interrupt indicating that INT_SEVERE_ERR register has pending interrupt. The reason for the interrupt is indicated in INT_SEVERE_ERR register. This bit is cleared automatically when INT_SEVERE_ERR register is cleared to 0x00.
5	MODERATE_ERR_INT	R	0b	Interrupt indicating that INT_MODERATE_ERR register has pending interrupt. The reason for the interrupt is indicated in INT_MODERATE_ERR register. This bit is cleared automatically when INT_MODERATE_ERR register is cleared to 0x00.
4	MISC_INT	R	0b	Interrupt indicating that INT_MISC register has pending interrupt. The reason for the interrupt is indicated in INT_MISC register. This bit is cleared automatically when INT_MISC register is cleared to 0x00.
3	STARTUP_INT	R	0b	Interrupt indicating that INT_STARTUP register has pending interrupt. The reason for the interrupt is indicated in INT_STARTUP register. This bit is cleared automatically when INT_STARTUP register is cleared to 0x00.
2	GPIO_INT	R	0b	Interrupt indicating that INT_GPIO register has pending interrupt. The reason for the interrupt is indicated in INT_GPIO register. This bit is cleared automatically when INT_GPIO register is cleared to 0x00.
1	VMON_INT	R	0b	Interrupt indicating that INT_VMON register has pending interrupt. The reason for the interrupt is indicated in INT_VMON register. This bit is cleared automatically when INT_VMON register is cleared to 0x00.
0	BUCK_INT	R	0b	Interrupt indicating that INT_BUCK register has pending interrupt. The reason for the interrupt is indicated in INT_BUCK register. This bit is cleared automatically when INT_BUCK register is cleared to 0x00.

Copyright © 2022 Texas Instruments Incorporated

7.7.1.66 INT_BUCK Register (Offset = 0x5B) [Reset = 0x00]

INT_BUCK is shown in 図 7-120 and described in 表 7-86.

Return to the 表 7-19.

図 7-125. INT_BUCK Register

7	6	5	4	3	2	1	0
RESERVED						BUCK3_4_INT	BUCK1_2_INT
R-0b						R-0b	R-0b

表 7-86. INT_BUCK Register Field Descriptions

Bit	Field	Type	Reset	Description
7:2	RESERVED	R	0b	
1	BUCK3_4_INT	R	0b	Interrupt indicating that INT_BUCK3_4 register has pending interrupt. This bit is cleared automatically when INT_BUCK3_4 register is cleared to 0x00.
0	BUCK1_2_INT	R	0b	Interrupt indicating that INT_BUCK1_2 register has pending interrupt. This bit is cleared automatically when INT_BUCK1_2 register is cleared to 0x00.

Copyright © 2022 Texas Instruments Incorporated

7.7.1.67 INT_BUCK1_2 Register (Offset = 0x5C) [Reset = 0x00]

INT_BUCK1_2 is shown in 図 7-121 and described in 表 7-87.

Return to the 表 7-19.

図 7-126. INT_BUCK1_2 Register

7	6	5	4	3	2	1	0
BUCK2_ILIM_INT	BUCK2_SC_INT	BUCK2_UV_INT	BUCK2_OV_INT	BUCK1_ILIM_INT	BUCK1_SC_INT	BUCK1_UV_INT	BUCK1_OV_INT
R/W1C-0b	R/W1C-0b	R/W1C-0b	R/W1C-0b	R/W1C-0b	R/W1C-0b	R/W1C-0b	R/W1C-0b

表 7-87. INT_BUCK1_2 Register Field Descriptions

Bit	Field	Type	Reset	Description
7	BUCK2_ILIM_INT	R/W1C	0b	Latched status bit indicating that BUCK2 output current limit has been triggered. Write 1 to clear.
6	BUCK2_SC_INT	R/W1C	0b	Latched status bit indicating following errors on BUCK2 output voltage: - BUCK2 output voltage has fallen below the short-circuit threshold level during operation, or - BUCK2 output did not exceed this short-circuit threshold level after expected ramp-up time, or - BUCK2 output exceeded this short-circuit threshold level before start-up of BUCK2 regulator Write 1 to clear.
5	BUCK2_UV_INT	R/W1C	0b	Latched status bit indicating that BUCK2 output under-voltage has been detected. Write 1 to clear.
4	BUCK2_OV_INT	R/W1C	0b	Latched status bit indicating that BUCK2 output over-voltage has been detected. Write 1 to clear.
3	BUCK1_ILIM_INT	R/W1C	0b	Latched status bit indicating that BUCK1 output current limit has been triggered. Write 1 to clear.
2	BUCK1_SC_INT	R/W1C	0b	Latched status bit indicating following errors on BUCK1 output voltage: - BUCK1 output voltage has fallen below the short-circuit threshold level during operation, or - BUCK1 output did not exceed this short-circuit threshold level after expected ramp-up time, or - BUCK1 output exceeded this short-circuit threshold level before start-up of BUCK1 regulator Write 1 to clear.
1	BUCK1_UV_INT	R/W1C	0b	Latched status bit indicating that BUCK1 output under-voltage has been detected. Write 1 to clear.
0	BUCK1_OV_INT	R/W1C	0b	Latched status bit indicating that BUCK1 output over-voltage has been detected. Write 1 to clear.

Copyright © 2022 Texas Instruments Incorporated

7.7.1.68 INT_BUCK3_4 Register (Offset = 0x5D) [Reset = 0x00]

INT_BUCK3_4 is shown in 図 7-122 and described in 表 7-88.

Return to the 表 7-19.

図 7-127. INT_BUCK3_4 Register

7	6	5	4	3	2	1	0
BUCK4_ILIM_INT	BUCK4_SC_INT	BUCK4_UV_INT	BUCK4_OV_INT	BUCK3_ILIM_INT	BUCK3_SC_INT	BUCK3_UV_INT	BUCK3_OV_INT
R/W1C-0b	R/W1C-0b	R/W1C-0b	R/W1C-0b	R/W1C-0b	R/W1C-0b	R/W1C-0b	R/W1C-0b

表 7-88. INT_BUCK3_4 Register Field Descriptions

Bit	Field	Type	Reset	Description
7	BUCK4_ILIM_INT	R/W1C	0b	Latched status bit indicating that BUCK4 output current limit has been triggered. Write 1 to clear.
6	BUCK4_SC_INT	R/W1C	0b	Latched status bit indicating following errors on BUCK4 output voltage: - BUCK4 output voltage has fallen below the short-circuit threshold level during operation, or - BUCK4 output did not exceed this short-circuit threshold level after expected ramp-up time, or - BUCK4 output exceeded this short-circuit threshold level before start-up of BUCK4 regulator Write 1 to clear.
5	BUCK4_UV_INT	R/W1C	0b	Latched status bit indicating that BUCK4 output under-voltage has been detected. Write 1 to clear.
4	BUCK4_OV_INT	R/W1C	0b	Latched status bit indicating that BUCK4 output over-voltage has been detected. Write 1 to clear.
3	BUCK3_ILIM_INT	R/W1C	0b	Latched status bit indicating that BUCK3 output current limit has been triggered. Write 1 to clear.
2	BUCK3_SC_INT	R/W1C	0b	Latched status bit indicating following errors on BUCK3 output voltage: - BUCK3 output voltage has fallen below the short-circuit threshold level during operation, or - BUCK3 output did not exceed this short-circuit threshold level after expected ramp-up time, or - BUCK3 output exceeded this short-circuit threshold level before start-up of BUCK3 regulator Write 1 to clear.
1	BUCK3_UV_INT	R/W1C	0b	Latched status bit indicating that BUCK3 output under-voltage has been detected. Write 1 to clear.
0	BUCK3_OV_INT	R/W1C	0b	Latched status bit indicating that BUCK3 output over-voltage has been detected. Write 1 to clear.

Copyright © 2022 Texas Instruments Incorporated

7.7.1.69 INT_VMON Register (Offset = 0x62) [Reset = 0x00]

INT_VMON is shown in 図 7-123 and described in 表 7-89.

Return to the 表 7-19.

図 7-128. INT_VMON Register

7	6	5	4	3	2	1	0
VMON2_RV_INT	VMON2_UV_INT	VMON2_OV_INT	VMON1_RV_INT	VMON1_UV_INT	VMON1_OV_INT	VCCA_UV_INT	VCCA_OV_INT
R/W1C-0b	R/W1C-0b	R/W1C-0b	R/W1C-0b	R/W1C-0b	R/W1C-0b	R/W1C-0b	R/W1C-0b

表 7-89. INT_VMON Register Field Descriptions

Bit	Field	Type	Reset	Description
7	VMON2_RV_INT	R/W1C	0b	Latched status bit indicating that the VMON2 voltage has been above residual voltage threshold level during voltage check. Write 1 to clear interrupt.
6	VMON2_UV_INT	R/W1C	0b	Latched status bit indicating that the VMON2 input voltage has decreased below the under-voltage monitoring level. The actual status of the VMON2 under-voltage monitoring is indicated by VMON2_UV_STAT bit. Write 1 to clear interrupt.
5	VMON2_OV_INT	R/W1C	0b	Latched status bit indicating that the VMON2 input voltage has exceeded the over-voltage detection level. The actual status of the over-voltage is indicated by VMON2_OV_STAT bit. Write 1 to clear interrupt.
4	VMON1_RV_INT	R/W1C	0b	Latched status bit indicating that the VMON1 voltage has been above residual voltage threshold level during voltage check. Write 1 to clear interrupt.
3	VMON1_UV_INT	R/W1C	0b	Latched status bit indicating that the VMON1 input voltage has decreased below the under-voltage monitoring level. The actual status of the VMON1 under-voltage monitoring is indicated by VMON1_UV_STAT bit. Write 1 to clear interrupt.
2	VMON1_OV_INT	R/W1C	0b	Latched status bit indicating that the VMON1 input voltage has exceeded the over-voltage detection level. The actual status of the over-voltage is indicated by VMON1_OV_STAT bit. Write 1 to clear interrupt.
1	VCCA_UV_INT	R/W1C	0b	Latched status bit indicating that the VCCA input voltage has decreased below the under-voltage monitoring level. The actual status of the VCCA under-voltage monitoring is indicated by VCCA_UV_STAT bit. Write 1 to clear interrupt.
0	VCCA_OV_INT	R/W1C	0b	Latched status bit indicating that the VCCA input voltage has exceeded the over-voltage detection level. The actual status of the over-voltage is indicated by VCCA_OV_STAT bit. Write 1 to clear interrupt.

Copyright © 2022 Texas Instruments Incorporated

7.7.1.70 INT_GPIO Register (Offset = 0x63) [Reset = 0x00]

INT_GPIO is shown in 図 7-124 and described in 表 7-90.

Return to the 表 7-19.

図 7-129. INT_GPIO Register

7	6	5	4	3	2	1	0
RESERVED				GPIO1_8_INT	RESERVED	GPIO10_INT	GPIO9_INT
R/W-0b				R-0b	R/W-0b	R/W1C-0b	R/W1C-0b

表 7-90. INT_GPIO Register Field Descriptions

Bit	Field	Type	Reset	Description
7:4	RESERVED	R/W	0b	
3	GPIO1_8_INT	R	0b	Interrupt indicating that INT_GPIO1_8 has pending interrupt. The reason for the interrupt is indicated in INT_GPIO1_8 register. This bit is cleared automatically when INT_GPIO1_8 register is cleared to 0x00.
2	RESERVED	R/W	0b	
1	GPIO10_INT	R/W1C	0b	Latched status bit indicating that GPIO10 has pending interrupt. GPIO10_IN bit in GPIO_IN_2 register shows the status of the GPIO10 signal. Write 1 to clear interrupt.
0	GPIO9_INT	R/W1C	0b	Latched status bit indicating that GPIO9 has pending interrupt. GPIO9_IN bit in GPIO_IN_2 register shows the status of the GPIO9 signal. Write 1 to clear interrupt.

Copyright © 2022 Texas Instruments Incorporated

7.7.1.71 INT_GPIO1_8 Register (Offset = 0x64) [Reset = 0x00]

INT_GPIO1_8 is shown in 図 7-125 and described in 表 7-91.

Return to the 表 7-19.

図 7-130. INT_GPIO1_8 Register

7	6	5	4	3	2	1	0
GPIO8_INT	GPIO7_INT	GPIO6_INT	GPIO5_INT	GPIO4_INT	GPIO3_INT	GPIO2_INT	GPIO1_INT
R/W1C-0b	R/W1C-0b	R/W1C-0b	R/W1C-0b	R/W1C-0b	R/W1C-0b	R/W1C-0b	R/W1C-0b

表 7-91. INT_GPIO1_8 Register Field Descriptions

Bit	Field	Type	Reset	Description
7	GPIO8_INT	R/W1C	0b	Latched status bit indicating that GPIO8 has pending interrupt. GPIO8_IN bit in GPIO_IN_1 register shows the status of the GPIO8 signal. Write 1 to clear interrupt.
6	GPIO7_INT	R/W1C	0b	Latched status bit indicating that GPIO7 has pending interrupt. GPIO7_IN bit in GPIO_IN_1 register shows the status of the GPIO7 signal. Write 1 to clear interrupt.
5	GPIO6_INT	R/W1C	0b	Latched status bit indicating that GPIO6 has pending interrupt. GPIO6_IN bit in GPIO_IN_1 register shows the status of the GPIO6 signal. Write 1 to clear interrupt.
4	GPIO5_INT	R/W1C	0b	Latched status bit indicating that GPIO5 has pending interrupt. GPIO5_IN bit in GPIO_IN_1 register shows the status of the GPIO5 signal. Write 1 to clear interrupt.
3	GPIO4_INT	R/W1C	0b	Latched status bit indicating that GPIO4 has pending interrupt. GPIO4_IN bit in GPIO_IN_1 register shows the status of the GPIO4 signal. Write 1 to clear interrupt.
2	GPIO3_INT	R/W1C	0b	Latched status bit indicating that GPIO3 has pending interrupt. GPIO3_IN bit in GPIO_IN_1 register shows the status of the GPIO3 signal. Write 1 to clear interrupt.
1	GPIO2_INT	R/W1C	0b	Latched status bit indicating that GPIO2 has pending interrupt. GPIO2_IN bit in GPIO_IN_1 register shows the status of the GPIO2 signal. Write 1 to clear interrupt.
0	GPIO1_INT	R/W1C	0b	Latched status bit indicating that GPIO1 has pending interrupt. GPIO1_IN bit in GPIO_IN_1 register shows the status of the GPIO1 signal. Write 1 to clear interrupt.

Copyright © 2022 Texas Instruments Incorporated

7.7.1.72 INT_STARTUP Register (Offset = 0x65) [Reset = 0x00]

INT_STARTUP is shown in 図 7-126 and described in 表 7-92.

Return to the 表 7-19.

図 7-131. INT_STARTUP Register

7	6	5	4	3	2	1	0
RESERVED		SOFT_REBOOT_INT	FSD_INT	RESERVED		ENABLE_INT	RESERVED
R/W-0b		R/W1C-0b	R/W1C-0b	R/W-0b		R/W1C-0b	R/W-0b

表 7-92. INT_STARTUP Register Field Descriptions

Bit	Field	Type	Reset	Description
7:6	RESERVED	R/W	0b	
5	SOFT_REBOOT_INT	R/W1C	0b	Latched status bit indicating that software reboot occurred.
4	FSD_INT	R/W1C	0b	Latched status bit indicating that PMIC has started from NO_SUPPLY state (first supply detection). Write 1 to clear.
3:2	RESERVED	R/W	0b	
1	ENABLE_INT	R/W1C	0b	Latched status bit indicating that ENABLE pin active event has been detected. Write 1 to clear.
0	RESERVED	R/W	0b	

Copyright © 2022 Texas Instruments Incorporated

7.7.1.73 INT_MISC Register (Offset = 0x66) [Reset = 0x00]

INT_MISC is shown in 図 7-127 and described in 表 7-93.

Return to the 表 7-19.

図 7-132. INT_MISC Register

7	6	5	4	3	2	1	0
RESERVED				TWARN_INT	RESERVED	EXT_CLK_INT	BIST_PASS_INT
R/W-0b				R/W1C-0b	R/W-0b	R/W1C-0b	R/W1C-0b

表 7-93. INT_MISC Register Field Descriptions

Bit	Field	Type	Reset	Description
7:4	RESERVED	R/W	0b	
3	TWARN_INT	R/W1C	0b	Latched status bit indicating that the die junction temperature has exceeded the thermal warning level. The actual status of the thermal warning is indicated by TWARN_STAT bit in STAT_MISC register. Write 1 to clear interrupt.
2	RESERVED	R/W	0b	
1	EXT_CLK_INT	R/W1C	0b	Latched status bit indicating that external clock is not valid. Internal clock is automatically taken into use. Write 1 to clear.
0	BIST_PASS_INT	R/W1C	0b	Latched status bit indicating that BIST has been completed. Write 1 to clear interrupt.

Copyright © 2022 Texas Instruments Incorporated

7.7.1.74 INT_MODERATE_ERR Register (Offset = 0x67) [Reset = 0x00]

INT_MODERATE_ERR is shown in 図 7-128 and described in 表 7-94.

Return to the 表 7-19.

図 7-133. INT_MODERATE_ERR Register

7	6	5	4	3	2	1	0
NRSTOUT_READBACK_INT	NINT_READBACK_INT	RESERVED	SPMI_ERR_INT	RECOV_CNT_INT	REG_CRC_ERR_INT	BIST_FAIL_INT	TSD_ORD_INT
R/W1C-0b	R/W1C-0b	R/W-0b	R/W1C-0b	R/W1C-0b	R/W1C-0b	R/W1C-0b	R/W1C-0b

表 7-94. INT_MODERATE_ERR Register Field Descriptions

Bit	Field	Type	Reset	Description
7	NRSTOUT_READBACK_INT	R/W1C	0b	Latched status bit indicating that NRSTOUT read-back error has been detected. Write 1 to clear interrupt.
6	NINT_READBACK_INT	R/W1C	0b	Latched status bit indicating that NINT read-back error has been detected. Write 1 to clear interrupt.
5	RESERVED	R/W	0b	
4	SPMI_ERR_INT	R/W1C	0b	Latched status bit indicating that the SPMI communication interface has detected an error. Write 1 to clear interrupt.
3	RECOV_CNT_INT	R/W1C	0b	Latched status bit indicating that RECOV_CNT has reached the limit (RECOV_CNT_THR). Write 1 to clear.
2	REG_CRC_ERR_INT	R/W1C	0b	Latched status bit indicating that the register CRC checking has detected an error. Write 1 to clear interrupt.
1	BIST_FAIL_INT	R/W1C	0b	Latched status bit indicating that the LBIST or ABIST has detected an error. Write 1 to clear interrupt.
0	TSD_ORD_INT	R/W1C	0b	Latched status bit indicating that the die junction temperature has exceeded the thermal level causing a sequenced shutdown. The regulators have been disabled. The regulators cannot be enabled if this bit is active. The actual status of the temperature is indicated by TSD_ORD_STAT bit in STAT_MODERATE_ERR register. Write 1 to clear interrupt.

Copyright © 2022 Texas Instruments Incorporated

7.7.1.75 INT_SEVERE_ERR Register (Offset = 0x68) [Reset = 0x00]

INT_SEVERE_ERR is shown in 図 7-129 and described in 表 7-95.

Return to the 表 7-19.

図 7-134. INT_SEVERE_ERR Register

7	6	5	4	3	2	1	0
RESERVED					PFSM_ERR_INT	VCCA_OVP_INT	TSD_IMM_INT
R/W-0b					R/W1C-0b	R/W1C-0b	R/W1C-0b

表 7-95. INT_SEVERE_ERR Register Field Descriptions

Bit	Field	Type	Reset	Description
7:3	RESERVED	R/W	0b	
2	PFSM_ERR_INT	R/W1C	0b	Latched status bit indicating that the PFSM sequencer has detected an error. Write 1 to clear interrupt.
1	VCCA_OVP_INT	R/W1C	0b	Latched status bit indicating that the VCCA input voltage has exceeded the over-voltage threshold level causing an immediate shutdown. The regulators have been disabled. Write 1 to clear interrupt.
0	TSD_IMM_INT	R/W1C	0b	Latched status bit indicating that the die junction temperature has exceeded the thermal level causing an immediate shutdown. The regulators have been disabled. The regulators cannot be enabled if this bit is active. The actual status of the temperature is indicated by TSD_IMM_STAT bit in STAT_SEVERE_ERR register. Write 1 to clear interrupt.

Copyright © 2022 Texas Instruments Incorporated

7.7.1.76 INT_FSM_ERR Register (Offset = 0x69) [Reset = 0x00]

INT_FSM_ERR is shown in 図 7-130 and described in 表 7-96.

Return to the 表 7-19.

図 7-135. INT_FSM_ERR Register

7	6	5	4	3	2	1	0
WD_INT	ESM_INT	READBACK_ERR_INT	COMM_ERR_INT	SOC_PWR_ERR_INT	MCU_PWR_ERR_INT	ORD_SHUTDOWN_INT	IMM_SHUTDOWN_INT
R-0b	R-0b	R-0b	R-0b	R/W1C-0b	R/W1C-0b	R/W1C-0b	R/W1C-0b

表 7-96. INT_FSM_ERR Register Field Descriptions

Bit	Field	Type	Reset	Description
7	WD_INT	R	0b	Interrupt indicating that WD_ERR_STATUS register has pending interrupt. This bit is cleared automatically when WD_RST_INT, WD_FAIL_INT and WD_LONGWIN_TIMEOUT_INT are cleared.
6	ESM_INT	R	0b	Interrupt indicating that INT_ESM has pending interrupt. This bit is cleared automatically when INT_ESM register is cleared to 0x00.
5	READBACK_ERR_INT	R	0b	Interrupt indicating that INT_READBACK_ERR has pending interrupt. This bit is cleared automatically when INT_READBACK_ERR register is cleared to 0x00.
4	COMM_ERR_INT	R	0b	Interrupt indicating that INT_COMM_ERR has pending interrupt. The reason for the interrupt is indicated in INT_COMM_ERR register. This bit is cleared automatically when INT_COMM_ERR register is cleared to 0x00.
3	SOC_PWR_ERR_INT	R/W1C	0b	Latched status bit indicating that SOC power error has been detected. Write 1 to clear.
2	MCU_PWR_ERR_INT	R/W1C	0b	Latched status bit indicating that MCU power error has been detected. Write 1 to clear.
1	ORD_SHUTDOWN_INT	R/W1C	0b	Latched status bit indicating that orderly shutdown has been detected. Write 1 to clear.
0	IMM_SHUTDOWN_INT	R/W1C	0b	Latched status bit indicating that immediate shutdown has been detected. Write 1 to clear.

Copyright © 2022 Texas Instruments Incorporated

7.7.1.77 INT_COMM_ERR Register (Offset = 0x6A) [Reset = 0x00]

INT_COMM_ERR is shown in 図 7-131 and described in 表 7-97.

Return to the 表 7-19.

図 7-136. INT_COMM_ERR Register

7	6	5	4	3	2	1	0
I2C2_ADR_ERR_INT	RESERVED	I2C2_CRC_ERR_INT	RESERVED	COMM_ADR_ERR_INT	RESERVED	COMM_CRC_ERR_INT	COMM_FRM_ERR_INT
R/W1C-0b	R/W-0b	R/W1C-0b	R/W-0b	R/W1C-0b	R/W-0b	R/W1C-0b	R/W1C-0b

表 7-97. INT_COMM_ERR Register Field Descriptions

Bit	Field	Type	Reset	Description
7	I2C2_ADR_ERR_INT	R/W1C	0b	Latched status bit indicating that I2C2 write to non-existing, protected or read-only register address has been detected. - Valid for I2C2 - CRC on I2C2 must be enabled (I2C2_CRC_EN=1 - NVM default bit) and I2C2_CRC_ERR_MASK=0 are required to generate nINT interrupt Write 1 to clear interrupt.
6	RESERVED	R/W	0b	
5	I2C2_CRC_ERR_INT	R/W1C	0b	Latched status bit indicating that I2C2 CRC error has been detected. - Valid for I2C2 - CRC on I2C2 must be enabled (I2C2_CRC_EN=1 - NVM default bit) and I2C2_CRC_ERR_MASK=0 are required to generate nINT interrupt Write 1 to clear interrupt. Write 1 to clear interrupt.
4	RESERVED	R/W	0b	
3	COMM_ADR_ERR_INT	R/W1C	0b	Latched status bit indicating that I2C1/SPI write to non-existing, protected or read-only register address has been detected. - Valid for SPI and I2C1 - CRC on I2C/SPI must be enabled (I2C1_SPI_CRC_EN=1 - NVM default bit) and COMM_CRC_ERR_MASK=0 are required to generate nINT interrupt Write 1 to clear interrupt. Write 1 to clear interrupt.
2	RESERVED	R/W	0b	
1	COMM_CRC_ERR_INT	R/W1C	0b	Latched status bit indicating that I2C1/SPI CRC error has been detected. - Valid for SPI and I2C1 - CRC on I2C/SPI must be enabled (I2C1_SPI_CRC_EN=1 - NVM default bit) and COMM_CRC_ERR_MASK=0 are required to generate nINT interrupt Write 1 to clear interrupt.
0	COMM_FRM_ERR_INT	R/W1C	0b	Latched status bit indicating that SPI frame error has been detected. Write 1 to clear interrupt.

Copyright © 2022 Texas Instruments Incorporated

7.7.1.78 INT_READBACK_ERR Register (Offset = 0x6B) [Reset = 0x00]

INT_READBACK_ERR is shown in 図 7-132 and described in 表 7-98.

Return to the 表 7-19.

図 7-137. INT_READBACK_ERR Register

7	6	5	4	3	2	1	0
RESERVED				NRSTOUT_SOC_READBACK_INT	RESERVED		EN_DRV_READBACK_INT
R/W-0b				R/W1C-0b	R/W-0b		R/W1C-0b

表 7-98. INT_READBACK_ERR Register Field Descriptions

Bit	Field	Type	Reset	Description
7:4	RESERVED	R/W	0b	
3	NRSTOUT_SOC_READBACK_INT	R/W1C	0b	Latched status bit indicating that NRSTOUT_SOC read-back error has been detected. Write 1 to clear interrupt.
2:1	RESERVED	R/W	0b	
0	EN_DRV_READBACK_INT	R/W1C	0b	Latched status bit indicating that EN_DRV read-back error has been detected. Write 1 to clear interrupt.

Copyright © 2022 Texas Instruments Incorporated

7.7.1.79 INT_ESM Register (Offset = 0x6C) [Reset = 0x00]

INT_ESM is shown in 図 7-133 and described in 表 7-99.

Return to the 表 7-19.

図 7-138. INT_ESM Register

7	6	5	4	3	2	1	0
RESERVED		ESM_MCU_RST_INT	ESM_MCU_FAIL_INT	ESM_MCU_PIN_INT	RESERVED		
R/W-0b		R/W1C-0b	R/W1C-0b	R/W1C-0b	R/W-0b		

表 7-99. INT_ESM Register Field Descriptions

Bit	Field	Type	Reset	Description
7:6	RESERVED	R/W	0b	
5	ESM_MCU_RST_INT	R/W1C	0b	Latched status bit indicating that MCU ESM reset has been detected. Write 1 to clear interrupt.
4	ESM_MCU_FAIL_INT	R/W1C	0b	Latched status bit indicating that MCU ESM fail has been detected. Write 1 to clear interrupt.
3	ESM_MCU_PIN_INT	R/W1C	0b	Latched status bit indicating that MCU ESM fault has been detected. Write 1 to clear interrupt.
2:0	RESERVED	R/W	0b	

Copyright © 2022 Texas Instruments Incorporated

7.7.1.80 STAT_BUCK1_2 Register (Offset = 0x6D) [Reset = 0x00]

STAT_BUCK1_2 is shown in 図 7-134 and described in 表 7-100.

Return to the 表 7-19.

図 7-139. STAT_BUCK1_2 Register

7	6	5	4	3	2	1	0
BUCK2_ILIM_STAT	RESERVED	BUCK2_UV_STAT	BUCK2_OV_STAT	BUCK1_ILIM_STAT	RESERVED	BUCK1_UV_STAT	BUCK1_OV_STAT
R-0b	R-0b	R-0b	R-0b	R-0b	R-0b	R-0b	R-0b

表 7-100. STAT_BUCK1_2 Register Field Descriptions

Bit	Field	Type	Reset	Description
7	BUCK2_ILIM_STAT	R	0b	Status bit indicating that BUCK2 output current is above current limit level.
6	RESERVED	R	0b	
5	BUCK2_UV_STAT	R	0b	Status bit indicating that BUCK2 output voltage is below under-voltage threshold.
4	BUCK2_OV_STAT	R	0b	Status bit indicating that BUCK2 output voltage is above over-voltage threshold.
3	BUCK1_ILIM_STAT	R	0b	Status bit indicating that BUCK1 output current is above current limit level.
2	RESERVED	R	0b	
1	BUCK1_UV_STAT	R	0b	Status bit indicating that BUCK1 output voltage is below under-voltage threshold.
0	BUCK1_OV_STAT	R	0b	Status bit indicating that BUCK1 output voltage is above over-voltage threshold.

Copyright © 2022 Texas Instruments Incorporated

7.7.1.81 STAT_BUCK3_4 Register (Offset = 0x6E) [Reset = 0x00]

STAT_BUCK3_4 is shown in 図 7-135 and described in 表 7-101.

Return to the 表 7-19.

図 7-140. STAT_BUCK3_4 Register

7	6	5	4	3	2	1	0
BUCK4_ILIM_STAT	RESERVED	BUCK4_UV_STAT	BUCK4_OV_STAT	BUCK3_ILIM_STAT	RESERVED	BUCK3_UV_STAT	BUCK3_OV_STAT
R-0b	R-0b	R-0b	R-0b	R-0b	R-0b	R-0b	R-0b

表 7-101. STAT_BUCK3_4 Register Field Descriptions

Bit	Field	Type	Reset	Description
7	BUCK4_ILIM_STAT	R	0b	Status bit indicating that BUCK4 output current is above current limit level.
6	RESERVED	R	0b	
5	BUCK4_UV_STAT	R	0b	Status bit indicating that BUCK4 output voltage is below under-voltage threshold.
4	BUCK4_OV_STAT	R	0b	Status bit indicating that BUCK4 output voltage is above over-voltage threshold.
3	BUCK3_ILIM_STAT	R	0b	Status bit indicating that BUCK3 output current is above current limit level.
2	RESERVED	R	0b	
1	BUCK3_UV_STAT	R	0b	Status bit indicating that BUCK3 output voltage is below under-voltage threshold.
0	BUCK3_OV_STAT	R	0b	Status bit indicating that BUCK3 output voltage is above over-voltage threshold.

Copyright © 2022 Texas Instruments Incorporated

7.7.1.82 STAT_VMON Register (Offset = 0x72) [Reset = 0x00]

STAT_VMON is shown in 図 7-136 and described in 表 7-102.

Return to the 表 7-19.

図 7-141. STAT_VMON Register

7	6	5	4	3	2	1	0
RESERVED	VMON2_UV_STAT	VMON2_OV_STAT	RESERVED	VMON1_UV_STAT	VMON1_OV_STAT	VCCA_UV_STAT	VCCA_OV_STAT
R-0b	R-0b	R-0b	R-0b	R-0b	R-0b	R-0b	R-0b

表 7-102. STAT_VMON Register Field Descriptions

Bit	Field	Type	Reset	Description
7	RESERVED	R	0b	
6	VMON2_UV_STAT	R	0b	Status bit indicating that VMON2 input voltage is below under-voltage level.
5	VMON2_OV_STAT	R	0b	Status bit indicating that VMON2 input voltage is above over-voltage level.
4	RESERVED	R	0b	
3	VMON1_UV_STAT	R	0b	Status bit indicating that VMON1 input voltage is below under-voltage level.
2	VMON1_OV_STAT	R	0b	Status bit indicating that VMON1 input voltage is above over-voltage level.
1	VCCA_UV_STAT	R	0b	Status bit indicating that VCCA input voltage is below under-voltage level.
0	VCCA_OV_STAT	R	0b	Status bit indicating that VCCA input voltage is above over-voltage level.

Copyright © 2022 Texas Instruments Incorporated

7.7.1.83 STAT_STARTUP Register (Offset = 0x73) [Reset = 0x00]

STAT_STARTUP is shown in 図 7-137 and described in 表 7-103.

Return to the 表 7-19.

図 7-142. STAT_STARTUP Register

7	6	5	4	3	2	1	0
RESERVED						ENABLE_STAT	RESERVED
R-0b						R-0b	R-0b

表 7-103. STAT_STARTUP Register Field Descriptions

Bit	Field	Type	Reset	Description
7:2	RESERVED	R	0b	
1	ENABLE_STAT	R	0b	Status bit indicating ENABLE pin status
0	RESERVED	R	0b	

7.7.1.84 STAT_MISC Register (Offset = 0x74) [Reset = 0x00]

STAT_MISC is shown in 図 7-138 and described in 表 7-104.

Return to the 表 7-19.

図 7-143. STAT_MISC Register

7	6	5	4	3	2	1	0
RESERVED				TWARN_STAT	RESERVED	EXT_CLK_STAT	RESERVED
R-0b				R-0b	R-0b	R-0b	R-0b

表 7-104. STAT_MISC Register Field Descriptions

Bit	Field	Type	Reset	Description
7:4	RESERVED	R	0b	
3	TWARN_STAT	R	0b	Status bit indicating that die junction temperature is above the thermal warning level.
2	RESERVED	R	0b	
1	EXT_CLK_STAT	R	0b	Status bit indicating that external clock is not valid.
0	RESERVED	R	0b	

Copyright © 2022 Texas Instruments Incorporated

7.7.1.85 STAT_MODERATE_ERR Register (Offset = 0x75) [Reset = 0x00]

STAT_MODERATE_ERR is shown in 図 7-139 and described in 表 7-105.

Return to the 表 7-19.

図 7-144. STAT_MODERATE_ERR Register

7	6	5	4	3	2	1	0
RESERVED							TSD_ORD_STAT
R-0b							R-0b

表 7-105. STAT_MODERATE_ERR Register Field Descriptions

Bit	Field	Type	Reset	Description
7:1	RESERVED	R	0b	
0	TSD_ORD_STAT	R	0b	Status bit indicating that the die junction temperature is above the thermal level causing a sequenced shutdown.

7.7.1.86 STAT_SEVERE_ERR Register (Offset = 0x76) [Reset = 0x00]

STAT_SEVERE_ERR is shown in 図 7-140 and described in 表 7-106.

Return to the 表 7-19.

図 7-145. STAT_SEVERE_ERR Register

7	6	5	4	3	2	1	0
RESERVED						VCCA_OVP_STAT	TSD_IMM_STAT
R-0b						R-0b	R-0b

表 7-106. STAT_SEVERE_ERR Register Field Descriptions

Bit	Field	Type	Reset	Description
7:2	RESERVED	R	0b	
1	VCCA_OVP_STAT	R	0b	Status bit indicating that the VCCA voltage is above overvoltage protection level.
0	TSD_IMM_STAT	R	0b	Status bit indicating that the die junction temperature is above the thermal level causing an immediate shutdown.

Copyright © 2022 Texas Instruments Incorporated

7.7.1.87 STAT_READBACK_ERR Register (Offset = 0x77) [Reset = 0x00]

STAT_READBACK_ERR is shown in 図 7-141 and described in 表 7-107.

Return to the 表 7-19.

図 7-146. STAT_READBACK_ERR Register

7	6	5	4	3	2	1	0
RESERVED				NRSTOUT_SOC_READBACK_STAT	NRSTOUT_READBACK_STAT	NINT_READBACK_STAT	EN_DRV_READBACK_STAT
R-0b				R-0b	R-0b	R-0b	R-0b

表 7-107. STAT_READBACK_ERR Register Field Descriptions

Bit	Field	Type	Reset	Description
7:4	RESERVED	R	0b	
3	NRSTOUT_SOC_READBACK_STAT	R	0b	Status bit indicating that NRSTOUT_SOC pin output is high and device is driving it low.
2	NRSTOUT_READBACK_STAT	R	0b	Status bit indicating that NRSTOUT pin output is high and device is driving it low.
1	NINT_READBACK_STAT	R	0b	Status bit indicating that NINT pin output is high and device is driving it low.
0	EN_DRV_READBACK_STAT	R	0b	Status bit indicating that EN_DRV pin output is different than driven.

Copyright © 2022 Texas Instruments Incorporated

7.7.1.88 PGOOD_SEL_1 Register (Offset = 0x78) [Reset = 0x00]

PGOOD_SEL_1 is shown in 図 7-142 and described in 表 7-108.

Return to the 表 7-19.

図 7-147. PGOOD_SEL_1 Register

7	6	5	4	3	2	1	0
PGOOD_SEL_BUCK4		PGOOD_SEL_BUCK3		PGOOD_SEL_BUCK2		PGOOD_SEL_BUCK1	
R/W-0b		R/W-0b		R/W-0b		R/W-0b	

表 7-108. PGOOD_SEL_1 Register Field Descriptions

Bit	Field	Type	Reset	Description
7:6	PGOOD_SEL_BUCK4	R/W	0b	PGOOD signal source control from BUCK4 (Default from NVM memory) 0b = Masked 1b = Powergood threshold voltage 10b = Powergood threshold voltage AND current limit 11b = Powergood threshold voltage AND current limit
5:4	PGOOD_SEL_BUCK3	R/W	0b	PGOOD signal source control from BUCK3 (Default from NVM memory) 0b = Masked 1b = Powergood threshold voltage 10b = Powergood threshold voltage AND current limit 11b = Powergood threshold voltage AND current limit
3:2	PGOOD_SEL_BUCK2	R/W	0b	PGOOD signal source control from BUCK2 (Default from NVM memory) 0b = Masked 1b = Powergood threshold voltage 10b = Powergood threshold voltage AND current limit 11b = Powergood threshold voltage AND current limit
1:0	PGOOD_SEL_BUCK1	R/W	0b	PGOOD signal source control from BUCK1 (Default from NVM memory) 0b = Masked 1b = Powergood threshold voltage 10b = Powergood threshold voltage AND current limit 11b = Powergood threshold voltage AND current limit

Copyright © 2022 Texas Instruments Incorporated

7.7.1.89 PGOOD_SEL_4 Register (Offset = 0x7B) [Reset = 0x00]

PGOOD_SEL_4 is shown in 図 7-143 and described in 表 7-109.

Return to the 表 7-19.

図 7-148. PGOOD_SEL_4 Register

7	6	5	4	3	2	1	0
PGOOD_WINDOW	PGOOD_POL	PGOOD_SEL_NRSTOUT_SOC	PGOOD_SEL_NRSTOUT	PGOOD_SEL_TDIE_WARN	PGOOD_SEL_VMON2	PGOOD_SEL_VMON1	PGOOD_SEL_VCCA
R/W-0b	R/W-0b	R/W-0b	R/W-0b	R/W-0b	R/W-0b	R/W-0b	R/W-0b

表 7-109. PGOOD_SEL_4 Register Field Descriptions

Bit	Field	Type	Reset	Description
7	PGOOD_WINDOW	R/W	0b	Type of voltage monitoring for PGOOD signal: (Default from NVM memory) 0b = Only undervoltage is monitored 1b = Both undervoltage and overvoltage are monitored
6	PGOOD_POL	R/W	0b	PGOOD signal polarity select: (Default from NVM memory) 0b = PGOOD signal is high when monitored inputs are valid 1b = PGOOD signal is low when monitored inputs are valid
5	PGOOD_SEL_NRSTOUT_SOC	R/W	0b	PGOOD signal source control from nRSTOUT_SOC pin: (Default from NVM memory) 0b = Masked 1b = nRSTOUT_SOC pin low state forces PGOOD signal to low
4	PGOOD_SEL_NRSTOUT	R/W	0b	PGOOD signal source control from nRSTOUT pin: (Default from NVM memory) 0b = Masked 1b = nRSTOUT pin low state forces PGOOD signal to low
3	PGOOD_SEL_TDIE_WARN	R/W	0b	PGOOD signal source control from thermal warning (Default from NVM memory) 0b = Masked 1b = Thermal warning affecting to PGOOD signal
2	PGOOD_SEL_VMON2	R/W	0b	PGOOD signal source control from VMON2 monitoring (Default from NVM memory) 0b = Masked 1b = VMON2 OV/UV threshold affecting PGOOD signal
1	PGOOD_SEL_VMON1	R/W	0b	PGOOD signal source control from VMON1 monitoring (Default from NVM memory) 0b = Masked 1b = VMON1 OV/UV threshold affecting PGOOD signal
0	PGOOD_SEL_VCCA	R/W	0b	PGOOD signal source control from VCCA monitoring (Default from NVM memory) 0b = Masked 1b = VCCA OV/UV threshold affecting PGOOD signal

Copyright © 2022 Texas Instruments Incorporated

7.7.1.90 PLL_CTRL Register (Offset = 0x7C) [Reset = 0x00]

PLL_CTRL is shown in 図 7-144 and described in 表 7-110.

Return to the 表 7-19.

図 7-149. PLL_CTRL Register

7	6	5	4	3	2	1	0
RESERVED						EXT_CLK_FREQ	
R/W-0b						R/W-0b	

表 7-110. PLL_CTRL Register Field Descriptions

Bit	Field	Type	Reset	Description
7:2	RESERVED	R/W	0b	
1:0	EXT_CLK_FREQ	R/W	0b	Frequency of the external clock (SYNCCLKIN): See electrical specification for input clock frequency tolerance. (Default from NVM memory) 0b = 1.1 MHz 1b = 2.2 MHz 10b = 4.4 MHz 11b = 8.8 MHz

Copyright © 2022 Texas Instruments Incorporated

7.7.1.91 CONFIG_1 Register (Offset = 0x7D) [Reset = 0xC0]

CONFIG_1 is shown in 図 7-145 and described in 表 7-111.

Return to the 表 7-19.

図 7-150. CONFIG_1 Register

7	6	5	4	3	2	1	0
NSLEEP2_MASK	NSLEEP1_MASK	EN_ILIM_FSM_CTRL	I2C2_HS	I2C1_HS	RESERVED	TSD_ORD_LEVEL	TWARN_LEVEL
R/W-1b	R/W-1b	R/W-0b	R/W-0b	R/W-0b	R/W-0b	R/W-0b	R/W-0b

表 7-111. CONFIG_1 Register Field Descriptions

Bit	Field	Type	Reset	Description
7	NSLEEP2_MASK	R/W	1b	Masking for NSLEEP2 pin(s) and NSLEEP2B bit: (Default from NVM memory) 0b = NSLEEP2(B) affects FSM state transitions. 1b = NSLEEP2(B) does not affect FSM state transitions.
6	NSLEEP1_MASK	R/W	1b	Masking for NSLEEP1 pin(s) and NSLEEP1B bit: (Default from NVM memory) 0b = NSLEEP1(B) affects FSM state transitions. 1b = NSLEEP1(B) does not affect FSM state transitions.
5	EN_ILIM_FSM_CTRL	R/W	0b	(Default from NVM memory) 0b = Buck regulators ILIM interrupts do not affect FSM triggers. 1b = Buck regulators ILIM interrupts affect FSM triggers.
4	I2C2_HS	R/W	0b	Select I2C2 speed (input filter) (Default from NVM memory) 0b = Standard, fast or fast+ by default, can be set to Hs-mode by Hs-mode controller code. 1b = Forced to Hs-mode
3	I2C1_HS	R/W	0b	Select I2C1 speed (input filter) (Default from NVM memory) 0b = Standard, fast or fast+ by default, can be set to Hs-mode by Hs-mode controller code. 1b = Forced to Hs-mode
2	RESERVED	R/W	0b	
1	TSD_ORD_LEVEL	R/W	0b	Thermal shutdown threshold level. (Default from NVM memory) 0b = 140C 1b = 145C
0	TWARN_LEVEL	R/W	0b	Thermal warning threshold level. (Default from NVM memory) 0b = 130C 1b = 140C

Copyright © 2022 Texas Instruments Incorporated

7.7.1.92 ENABLE_DRV_REG Register (Offset = 0x80) [Reset = 0x00]

ENABLE_DRV_REG is shown in 図 7-146 and described in 表 7-112.

Return to the 表 7-19.

図 7-151. ENABLE_DRV_REG Register

7	6	5	4	3	2	1	0
RESERVED							ENABLE_DRV
R/W-0b							R/W-0b

表 7-112. ENABLE_DRV_REG Register Field Descriptions

Bit	Field	Type	Reset	Description
7:1	RESERVED	R/W	0b	
0	ENABLE_DRV	R/W	0b	Control for EN_DRV pin: FORCE_EN_DRV_LOW must be 0 to control EN_DRV pin. Otherwise EN_DRV pin is low. 0b = Low 1b = High

Copyright © 2022 Texas Instruments Incorporated

7.7.1.93 MISC_CTRL Register (Offset = 0x81) [Reset = 0x00]

MISC_CTRL is shown in 図 7-147 and described in 表 7-113.

Return to the 表 7-19.

図 7-152. MISC_CTRL Register

7	6	5	4	3	2	1	0
SYNCCLKOUT_FREQ_SEL		SEL_EXT_CLK	REFOUT_EN	CLKMON_EN	LPM_EN	NRSTOUT_SOC	NRSTOUT
R/W-0b		R/W-0b	R/W-0b	R/W-0b	R/W-0b	R/W-0b	R/W-0b

表 7-113. MISC_CTRL Register Field Descriptions

Bit	Field	Type	Reset	Description
7:6	SYNCCLKOUT_FREQ_SEL	R/W	0b	SYNCCLKOUT enable/frequency select: 0b = SYNCCLKOUT off 1b = 1.1 MHz 10b = 2.2 MHz 11b = 4.4 MHz
5	SEL_EXT_CLK	R/W	0b	Selection of external clock: 0b = Forced to internal RC oscillator. 1b = Automatic external clock use when available, interrupt is generated if the external clock is expected (SEL_EXT_CLK = 1), but it is not available or the clock frequency is not within the valid range.
4	REFOUT_EN	R/W	0b	Control bandgap voltage to REFOUT pin. 0b = Disabled 1b = Enabled
3	CLKMON_EN	R/W	0b	Control of internal clock monitoring. 0b = Disabled 1b = Enabled
2	LPM_EN	R/W	0b	Low power mode control. LPM_EN sets device in a low power mode. Intended use case is for the PFSM to set LPM_EN upon entering a deep sleep state. The end objective is to disable the digital oscillator to reduce power consumption. The following functions are disabled when LPM_EN=1. -TSD cycling of all sensors/thresholds -regmap/SRAM CRC continuous checking -SPMI WD NVM_ID request/response polling -Disable clock monitoring 0b = Low power mode disabled 1b = Low power mode enabled
1	NRSTOUT_SOC	R/W	0b	Control for nRSTOUT_SOC signal: 0b = Low 1b = High
0	NRSTOUT	R/W	0b	Control for nRSTOUT signal: 0b = Low 1b = High

Copyright © 2022 Texas Instruments Incorporated

7.7.1.94 ENABLE_DRV_STAT Register (Offset = 0x82) [Reset = 0x08]

ENABLE_DRV_STAT is shown in 図 7-148 and described in 表 7-114.

Return to the 表 7-19.

図 7-153. ENABLE_DRV_STAT Register

7	6	5	4	3	2	1	0
RESERVED			SPMI_LPM_EN	FORCE_EN_DRV_LOW	NRSTOUT_SOC_IN	NRSTOUT_IN	EN_DRV_IN
R/W-0b			R/W-0b	R/W-1b	R-0b	R-0b	R-0b

表 7-114. ENABLE_DRV_STAT Register Field Descriptions

Bit	Field	Type	Reset	Description
7:5	RESERVED	R/W	0b	
4	SPMI_LPM_EN	R/W	0b	This bit is read/write for PFSM and read-only for I2C/SPI SPMI low power mode control. SPMI_LPM_EN sets SPMI in a low power mode that stops SPMI WD (Bus heartbeat). The PMICs on the SPMI-bus must set SPMI_LPM_EN=1 synchronously to prevent SPMI WD failures. Therefore to mitigate clock variations, setting SPMI_LPM_EN=1 must be done early in the power-up sequence. The following functions are disabled when SPMI_LPM_EN=1. -SPMI WD NVM_ID request/response polling 0b = SPMI low power mode disabled 1b = SPMI low power mode enabled
3	FORCE_EN_DRV_LOW	R/W	1b	This bit is read/write for PFSM and read-only for I2C/SPI 0b = ENABLE_DRV bit can be written by I2C/SPI 1b = ENABLE_DRV bit is forced low and cannot be written high by I2C/SPI
2	NRSTOUT_SOC_IN	R	0b	Level of NRSTOUT_SOC pin: 0b = Low 1b = High
1	NRSTOUT_IN	R	0b	Level of NRSTOUT pin: 0b = Low 1b = High
0	EN_DRV_IN	R	0b	Level of EN_DRV pin: 0b = Low 1b = High

Copyright © 2022 Texas Instruments Incorporated

7.7.1.95 RECOV_CNT_REG_1 Register (Offset = 0x83) [Reset = 0x00]

RECOV_CNT_REG_1 is shown in 図 7-149 and described in 表 7-115.

Return to the 表 7-19.

図 7-154. RECOV_CNT_REG_1 Register

7	6	5	4	3	2	1	0
RESERVED				RECOV_CNT			
R-0b				R-0b			

表 7-115. RECOV_CNT_REG_1 Register Field Descriptions

Bit	Field	Type	Reset	Description
7:4	RESERVED	R	0b	
3:0	RECOV_CNT	R	0b	Recovery counter status. Counter value is incremented each time PMIC goes through warm reset.

7.7.1.96 RECOV_CNT_REG_2 Register (Offset = 0x84) [Reset = 0x00]

RECOV_CNT_REG_2 is shown in 図 7-150 and described in 表 7-116.

Return to the 表 7-19.

図 7-155. RECOV_CNT_REG_2 Register

7	6	5	4	3	2	1	0
RESERVED			RECOV_CNT_CLR	RECOV_CNT_THR			
R/W-0b			R/WSelfClrF-0b	R/W-0b			

表 7-116. RECOV_CNT_REG_2 Register Field Descriptions

Bit	Field	Type	Reset	Description
7:5	RESERVED	R/W	0b	
4	RECOV_CNT_CLR	R/WSelfClrF	0b	Recovery counter clear. Write 1 to clear the counter. This bit is automatically set back to 0.
3:0	RECOV_CNT_THR	R/W	0b	Recovery counter threshold value for immediate power-down of all supply rails. (Default from NVM memory)

Copyright © 2022 Texas Instruments Incorporated

7.7.1.97 FSM_I2C_TRIGGERS Register (Offset = 0x85) [Reset = 0x00]

FSM_I2C_TRIGGERS is shown in 図 7-151 and described in 表 7-117.

Return to the 表 7-19.

図 7-156. FSM_I2C_TRIGGERS Register

7	6	5	4	3	2	1	0
TRIGGER_I2C_7	TRIGGER_I2C_6	TRIGGER_I2C_5	TRIGGER_I2C_4	TRIGGER_I2C_3	TRIGGER_I2C_2	TRIGGER_I2C_1	TRIGGER_I2C_0
R/W-0b	R/W-0b	R/W-0b	R/W-0b	R/WSelfClrF-0b	R/WSelfClrF-0b	R/WSelfClrF-0b	R/WSelfClrF-0b

表 7-117. FSM_I2C_TRIGGERS Register Field Descriptions

Bit	Field	Type	Reset	Description
7	TRIGGER_I2C_7	R/W	0b	Trigger for PFSM program.
6	TRIGGER_I2C_6	R/W	0b	Trigger for PFSM program.
5	TRIGGER_I2C_5	R/W	0b	Trigger for PFSM program.
4	TRIGGER_I2C_4	R/W	0b	Trigger for PFSM program.
3	TRIGGER_I2C_3	R/WSelfClrF	0b	Trigger for PFSM program. This bit is automatically cleared. Writing this bit 1 creates PFSM trigger pulse.
2	TRIGGER_I2C_2	R/WSelfClrF	0b	Trigger for PFSM program. This bit is automatically cleared. Writing this bit 1 creates PFSM trigger pulse.
1	TRIGGER_I2C_1	R/WSelfClrF	0b	Trigger for PFSM program. This bit is automatically cleared. Writing this bit 1 creates PFSM trigger pulse.
0	TRIGGER_I2C_0	R/WSelfClrF	0b	Trigger for PFSM program. This bit is automatically cleared. Writing this bit 1 creates PFSM trigger pulse.

Copyright © 2022 Texas Instruments Incorporated

7.7.1.98 FSM_NSLEEP_TRIGGERS Register (Offset = 0x86) [Reset = 0x00]

FSM_NSLEEP_TRIGGERS is shown in 図 7-152 and described in 表 7-118.

Return to the 表 7-19.

図 7-157. FSM_NSLEEP_TRIGGERS Register

7	6	5	4	3	2	1	0
RESERVED						NSLEEP2B	NSLEEP1B
R/W-0b						R/W-0b	R/W-0b

表 7-118. FSM_NSLEEP_TRIGGERS Register Field Descriptions

Bit	Field	Type	Reset	Description
7:2	RESERVED	R/W	0b	
1	NSLEEP2B	R/W	0b	Parallel register bit for NSLEEP2 function: 0b = NSLEEP2 low 1b = NSLEEP2 high
0	NSLEEP1B	R/W	0b	Parallel register bit for NSLEEP1 function: 0b = NSLEEP1 low 1b = NSLEEP1 high

Copyright © 2022 Texas Instruments Incorporated

7.7.1.99 BUCK_RESET_REG Register (Offset = 0x87) [Reset = 0x00]

BUCK_RESET_REG is shown in 図 7-153 and described in 表 7-119.

Return to the 表 7-19.

図 7-158. BUCK_RESET_REG Register

7	6	5	4	3	2	1	0
RESERVED				BUCK4_RESET	BUCK3_RESET	BUCK2_RESET	BUCK1_RESET
R/W-0b				R/W-0b	R/W-0b	R/W-0b	R/W-0b

表 7-119. BUCK_RESET_REG Register Field Descriptions

Bit	Field	Type	Reset	Description
7:4	RESERVED	R/W	0b	
3	BUCK4_RESET	R/W	0b	Reset signal for Buck logic. (Default from NVM memory)
2	BUCK3_RESET	R/W	0b	Reset signal for Buck logic. (Default from NVM memory)
1	BUCK2_RESET	R/W	0b	Reset signal for Buck logic. (Default from NVM memory)
0	BUCK1_RESET	R/W	0b	Reset signal for Buck logic. (Default from NVM memory)

Copyright © 2022 Texas Instruments Incorporated

7.7.1.100 SPREAD_SPECTRUM_1 Register (Offset = 0x88) [Reset = 0x00]

SPREAD_SPECTRUM_1 is shown in 図 7-154 and described in 表 7-120.

Return to the 表 7-19.

図 7-159. SPREAD_SPECTRUM_1 Register

7	6	5	4	3	2	1	0
RESERVED					SS_EN	SS_DEPTH	
R/W-0b					R/W-0b	R/W-0b	

表 7-120. SPREAD_SPECTRUM_1 Register Field Descriptions

Bit	Field	Type	Reset	Description
7:3	RESERVED	R/W	0b	
2	SS_EN	R/W	0b	Spread spectrum enable. (Default from NVM memory) 0b = Spread spectrum disabled 1b = Spread spectrum enabled
1:0	SS_DEPTH	R/W	0b	Spread spectrum modulation depth. (Default from NVM memory) 0b = No modulation 1b = +/- 6.3% 10b = +/- 8.4% 11b = RESERVED

Copyright © 2022 Texas Instruments Incorporated

7.7.1.101 FSM_STEP_SIZE Register (Offset = 0x8B) [Reset = 0x00]

FSM_STEP_SIZE is shown in 図 7-155 and described in 表 7-121.

Return to the 表 7-19.

図 7-160. FSM_STEP_SIZE Register

7	6	5	4	3	2	1	0
RESERVED			PFSM_DELAY_STEP				
R/W-0b			R/W-0b				

表 7-121. FSM_STEP_SIZE Register Field Descriptions

Bit	Field	Type	Reset	Description
7:5	RESERVED	R/W	0b	
4:0	PFSM_DELAY_STEP	R/W	0b	Step size for PFSM sequence counter. Step size is 50ns * $2^{PFSM_DELAY_STEP}$. (Default from NVM memory)

7.7.1.102 USER_SPARE_REGS Register (Offset = 0x8E) [Reset = 0x00]

USER_SPARE_REGS is shown in 図 7-156 and described in 表 7-122.

Return to the 表 7-19.

図 7-161. USER_SPARE_REGS Register

7	6	5	4	3	2	1	0
RESERVED				USER_SPARE_4	USER_SPARE_3	USER_SPARE_2	USER_SPARE_1
R/W-0b				R/W-0b	R/W-0b	R/W-0b	R/W-0b

表 7-122. USER_SPARE_REGS Register Field Descriptions

Bit	Field	Type	Reset	Description
7:4	RESERVED	R/W	0b	
3	USER_SPARE_4	R/W	0b	(Default from NVM memory)
2	USER_SPARE_3	R/W	0b	(Default from NVM memory)
1	USER_SPARE_2	R/W	0b	(Default from NVM memory)
0	USER_SPARE_1	R/W	0b	(Default from NVM memory)

Copyright © 2022 Texas Instruments Incorporated

7.7.1.103 ESM_MCU_START_REG Register (Offset = 0x8F) [Reset = 0x00]

ESM_MCU_START_REG is shown in 図 7-157 and described in 表 7-123.

Return to the 表 7-19.

図 7-162. ESM_MCU_START_REG Register

7	6	5	4	3	2	1	0
RESERVED							ESM_MCU_START
R/W-0b							R/W-0b

表 7-123. ESM_MCU_START_REG Register Field Descriptions

Bit	Field	Type	Reset	Description
7:1	RESERVED	R/W	0b	
0	ESM_MCU_START	R/W	0b	Control bit to start the ESM_MCU: 0b = ESM_MCU not started. Device clears ENABLE_DRV bit when bit ESM_MCU_EN=1 1b = ESM_MCU started.

Copyright © 2022 Texas Instruments Incorporated

7.7.1.104 ESM_MCU_DELAY1_REG Register (Offset = 0x90) [Reset = 0x00]

ESM_MCU_DELAY1_REG is shown in 図 7-158 and described in 表 7-124.

Return to the 表 7-19.

図 7-163. ESM_MCU_DELAY1_REG Register

7	6	5	4	3	2	1	0
ESM_MCU_DELAY1							
R/W-0b							

表 7-124. ESM_MCU_DELAY1_REG Register Field Descriptions

Bit	Field	Type	Reset	Description
7:0	ESM_MCU_DELAY1	R/W	0b	These bits configure the duration of the ESM_MCU delay-1 time-interval (see Error Signal Monitor chapter). These bits can be only be written when control bit ESM_MCU_START=0.

Copyright © 2022 Texas Instruments Incorporated

7.7.1.105 ESM_MCU_DELAY2_REG Register (Offset = 0x91) [Reset = 0x00]

ESM_MCU_DELAY2_REG is shown in 図 7-159 and described in 表 7-125.

Return to the 表 7-19.

図 7-164. ESM_MCU_DELAY2_REG Register

7	6	5	4	3	2	1	0
ESM_MCU_DELAY2							
R/W-0b							

表 7-125. ESM_MCU_DELAY2_REG Register Field Descriptions

Bit	Field	Type	Reset	Description
7:0	ESM_MCU_DELAY2	R/W	0b	These bits configure the duration of the ESM_MCU delay-2 time-interval (see Error Signal Monitor chapter). These bits can be only be written when control bit ESM_MCU_START=0.

7.7.1.106 ESM_MCU_MODE_CFG Register (Offset = 0x92) [Reset = 0x00]

ESM_MCU_MODE_CFG is shown in 図 7-160 and described in 表 7-126.

Return to the 表 7-19.

図 7-165. ESM_MCU_MODE_CFG Register

7	6	5	4	3	2	1	0
ESM_MCU_MODE	ESM_MCU_EN	ESM_MCU_ENDRV	RESERVED	ESM_MCU_ERR_CNT_TH			
R/W-0b	R/W-0b	R/W-0b	R/W-0b	R/W-0b			

表 7-126. ESM_MCU_MODE_CFG Register Field Descriptions

Bit	Field	Type	Reset	Description
7	ESM_MCU_MODE	R/W	0b	This bit selects the mode for the ESM_MCU: These bits can be only be written when control bit ESM_MCU_START=0. 0b = Level Mode 1b = PWM Mode
6	ESM_MCU_EN	R/W	0b	ESM_MCU enable configuration bit: These bits can be only be written when control bit ESM_MCU_START=0. (Default from NVM memory) 0b = ESM_MCU disabled. MCU can set ENABLE_DRV bit to 1 if all other interrupt bits are cleared 1b = ESM_MCU enabled. MCU can set ENABLE_DRV bit to 1 if: - bit ESM_MCU_START=1, and - (ESM_MCU_FAIL_INT=0 or ESM_MCU_ENDRV=0), and - ESM_MCU_RST_INT=0, and - all other interrupt bits are cleared
5	ESM_MCU_ENDRV	R/W	0b	Configuration bit to select ENABLE_DRV clear on ESM-error for ESM_MCU: These bits can be only be written when control bit ESM_MCU_START=0. 0b = ENABLE_DRV not cleared when ESM_MCU_FAIL_INT=1 1b = ENABLE_DRV cleared when ESM_MCU_FAIL_INT=1
4	RESERVED	R/W	0b	
3:0	ESM_MCU_ERR_CNT_TH	R/W	0b	Configuration bits for the threshold of the ESM_MCU error-counter. The ESM_MCU starts the Error Handling Procedure (see Section 4.17.1) if ESM_MCU_ERR_CNT[4:0] > ESM_MCU_ERR_CNT_TH[3:0]. These bits can be only be written when control bit ESM_MCU_START=0.

Copyright © 2022 Texas Instruments Incorporated

7.7.1.107 ESM_MCU_HMAX_REG Register (Offset = 0x93) [Reset = 0x00]

ESM_MCU_HMAX_REG is shown in 図 7-161 and described in 表 7-127.

Return to the 表 7-19.

図 7-166. ESM_MCU_HMAX_REG Register

7	6	5	4	3	2	1	0
ESM_MCU_HMAX							
R/W-0b							

表 7-127. ESM_MCU_HMAX_REG Register Field Descriptions

Bit	Field	Type	Reset	Description
7:0	ESM_MCU_HMAX	R/W	0b	These bits configure the maximum high-pulse time-threshold (tHIGH_MAX_TH) for ESM_MCU (see Error Signal Monitor chapter). These bits can be only be written when control bit ESM_MCU_START=0.

7.7.1.108 ESM_MCU_HMIN_REG Register (Offset = 0x94) [Reset = 0x00]

ESM_MCU_HMIN_REG is shown in 図 7-162 and described in 表 7-128.

Return to the 表 7-19.

図 7-167. ESM_MCU_HMIN_REG Register

7	6	5	4	3	2	1	0
ESM_MCU_HMIN							
R/W-0b							

表 7-128. ESM_MCU_HMIN_REG Register Field Descriptions

Bit	Field	Type	Reset	Description
7:0	ESM_MCU_HMIN	R/W	0b	These bits configure the minimum high-pulse time-threshold (tHIGH_MIN_TH) for ESM_MCU (see Error Signal Monitor chapter). These bits can be only be written when control bit ESM_MCU_START=0.

Copyright © 2022 Texas Instruments Incorporated

7.7.1.109 ESM_MCU_LMAX_REG Register (Offset = 0x95) [Reset = 0x00]

ESM_MCU_LMAX_REG is shown in 図 7-163 and described in 表 7-129.

Return to the 表 7-19.

図 7-168. ESM_MCU_LMAX_REG Register

7	6	5	4	3	2	1	0
ESM_MCU_LMAX							
R/W-0b							

表 7-129. ESM_MCU_LMAX_REG Register Field Descriptions

Bit	Field	Type	Reset	Description
7:0	ESM_MCU_LMAX	R/W	0b	These bits configure the maximum low-pulse time-threshold (tLOW_MAX_TH) for ESM_MCU (see Error Signal Monitor chapter). These bits can be only be written when control bit ESM_MCU_START=0.

7.7.1.110 ESM_MCU_LMIN_REG Register (Offset = 0x96) [Reset = 0x00]

ESM_MCU_LMIN_REG is shown in 図 7-164 and described in 表 7-130.

Return to the 表 7-19.

図 7-169. ESM_MCU_LMIN_REG Register

7	6	5	4	3	2	1	0
ESM_MCU_LMIN							
R/W-0b							

表 7-130. ESM_MCU_LMIN_REG Register Field Descriptions

Bit	Field	Type	Reset	Description
7:0	ESM_MCU_LMIN	R/W	0b	These bits configure the minimum low-pulse time-threshold (tLOW_MAX_TH) for ESM_MCU (see Error Signal Monitor chapter). These bits can be only be written when control bit ESM_MCU_START=0.

Copyright © 2022 Texas Instruments Incorporated

7.7.1.111 ESM_MCU_ERR_CNT_REG Register (Offset = 0x97) [Reset = 0x00]

ESM_MCU_ERR_CNT_REG is shown in 図 7-165 and described in 表 7-131.

Return to the 表 7-19.

図 7-170. ESM_MCU_ERR_CNT_REG Register

7	6	5	4	3	2	1	0
RESERVED			ESM_MCU_ERR_CNT				
R-0b			R-0b				

表 7-131. ESM_MCU_ERR_CNT_REG Register Field Descriptions

Bit	Field	Type	Reset	Description
7:5	RESERVED	R	0b	
4:0	ESM_MCU_ERR_CNT	R	0b	Status bits to indicate the value of the ESM_MCU Error-Counter. The device clears these bits when ESM_MCU_START bit is 0, or when the device resets the MCU.

7.7.1.112 REGISTER_LOCK Register (Offset = 0xA1) [Reset = 0x00]

REGISTER_LOCK is shown in 図 7-166 and described in 表 7-132.

Return to the 表 7-19.

図 7-171. REGISTER_LOCK Register

7	6	5	4	3	2	1	0
RESERVED							REGISTER_LOCK_STATUS
R/W-0b							R/W-0b

表 7-132. REGISTER_LOCK Register Field Descriptions

Bit	Field	Type	Reset	Description
7:1	RESERVED	R/W	0b	
0	REGISTER_LOCK_STATUS	R/W	0b	Unlocking registers: write 0x9B to this address. Locking registers: write anything else than 0x9B to this address. Written 8 bit data to this address is not stored, only lock status can be read. REGISTER_LOCK_STATUS bit shows the lock status: 0b = Registers are unlocked 1b = Registers are locked

Copyright © 2022 Texas Instruments Incorporated

7.7.1.113 CUSTOMER_NVM_ID_REG Register (Offset = 0xA7) [Reset = 0x00]

CUSTOMER_NVM_ID_REG is shown in 図 7-167 and described in 表 7-133.

Return to the 表 7-19.

図 7-172. CUSTOMER_NVM_ID_REG Register

7	6	5	4	3	2	1	0
CUSTOMER_NVM_ID							
R/W-0b							

表 7-133. CUSTOMER_NVM_ID_REG Register Field Descriptions

Bit	Field	Type	Reset	Description
7:0	CUSTOMER_NVM_ID	R/W	0b	Customer NVM version of the IC (Default from NVM memory)

7.7.1.114 VMON_CONF Register (Offset = 0xA8) [Reset = 0x00]

VMON_CONF is shown in 図 7-168 and described in 表 7-134.

Return to the 表 7-19.

図 7-173. VMON_CONF Register

7	6	5	4	3	2	1	0
RESERVED		VMON2_SLEW_RATE			VMON1_SLEW_RATE		
R/W-0b		R/W-0b			R/W-0b		

表 7-134. VMON_CONF Register Field Descriptions

Bit	Field	Type	Reset	Description
7:6	RESERVED	R/W	0b	
5:3	VMON2_SLEW_RATE	R/W	0b	Voltage slew-rate for VMON2 pin. Setting is used to calculate OV/UV monitoring delays. 0b = 33 mV/µs 1b = 20 mV/µs 10b = 10 mV/µs 11b = 5.0 mV/µs 100b = 2.5 mV/µs 101b = 1.3 mV/µs 110b = 0.63 mV/µs 111b = 0.31 mV/µs
2:0	VMON1_SLEW_RATE	R/W	0b	Voltage slew-rate for VMON1 pin. Setting is used to calculate OV/UV monitoring delays. 0b = 33 mV/µs 1b = 20 mV/µs 10b = 10 mV/µs 11b = 5.0 mV/µs 100b = 2.5 mV/µs 101b = 1.3 mV/µs 110b = 0.63 mV/µs 111b = 0.31 mV/µs

Copyright © 2022 Texas Instruments Incorporated

7.7.1.115 INT_SPI_STATUS Register (Offset = 0xA9) [Reset = 0x00]

INT_SPI_STATUS is shown in 図 7-169 and described in 表 7-135.

Return to the 表 7-19.

図 7-174. INT_SPI_STATUS Register

7	6	5	4	3	2	1	0
RESERVED	COMM_ADR_ERR_SWINT	COMM_CRC_ERR_SWINT	COMM_FRM_ERR_SWINT	ESM_MCU_PIN_SWINT	TWARN_SWINT	WD_SWINT	EN_DRV_STAT
R/W-0b	R/W1C-0b	R/W1C-0b	R/W1C-0b	R/W1C-0b	R/W1C-0b	R/W1C-0b	R-0b

表 7-135. INT_SPI_STATUS Register Field Descriptions

Bit	Field	Type	Reset	Description
7	RESERVED	R/W	0b	
6	COMM_ADR_ERR_SWINT	R/W1C	0b	Latched status bit indicating that SPI (or I2C1) write to non-existing, protected or read-only register address, or read from non-existing register address has been detected. CRC on I2C/SPI must be enabled (I2C1_SPI_CRC_EN=1 - NVM default bit) is required to generate the error-indication with this status bit This interrupt bit cannot be masked with the COMM_ADR_ERR_MASK bit Write 1 to clear interrupt.
5	COMM_CRC_ERR_SWINT	R/W1C	0b	Latched status bit indicating that SPI (or I2C1) CRC error has been detected. CRC on I2C/SPI must be enabled (I2C1_SPI_CRC_EN=1 - NVM default bit) is required to generate the error-indication with this status bit This interrupt bit cannot be masked with the COMM_CRC_ERR_MASK bit Write 1 to clear interrupt.
4	COMM_FRM_ERR_SWINT	R/W1C	0b	Latched status bit indicating that SPI frame error has been detected. Write 1 to clear interrupt.
3	ESM_MCU_PIN_SWINT	R/W1C	0b	Latched status bit indicating that MCU ESM fault has been detected. Write 1 to clear interrupt.
2	TWARN_SWINT	R/W1C	0b	Latched status bit indicating that the die junction temperature has exceeded the thermal warning level. The actual status of the thermal warning is indicated by TWARN_STAT bit in STAT_MISC register. Write 1 to clear interrupt.
1	WD_SWINT	R/W1C	0b	Latched status bit indicating that Watchdog error has been detected. This bit is cleared by writing 1 when WD_RST_INT, WD_FAIL_INT and WD_LONGWIN_TIMEOUT_INT are cleared.
0	EN_DRV_STAT	R	0b	State of EN_DRV pin.

Copyright © 2022 Texas Instruments Incorporated

7.7.1.116 STARTUP_CTRL Register (Offset = 0xC3) [Reset = 0x00]

STARTUP_CTRL is shown in 図 7-170 and described in 表 7-136.

Return to the 表 7-19.

図 7-175. STARTUP_CTRL Register

7	6	5	4	3	2	1	0
FIRST_STARTUP_DONE	STARTUP_DEST		FAST_BIST	LP_STANDBY_SEL	SKIP_LP_STANDBY_EE_READ	RESERVED	
R/W-0b	R/W-0b		R/W-0b	R/W-0b	R/W-0b	R/W-0b	

表 7-136. STARTUP_CTRL Register Field Descriptions

Bit	Field	Type	Reset	Description
7	FIRST_STARTUP_DONE	R/W	0b	Control for register reset and EEPROM read at INIT state. See "Register Resets and EEPROM read at INIT state" chapter for operation. Note that SKIP_LP_STANDBY_EE_READ affects the operation when transitioning from LP_STANDBY to INIT. 0b = Conf_registers are reset and default values are loaded from EEPROM 1b = Conf_registers stay unchanged
6:5	STARTUP_DEST	R/W	0b	FSM start-up destination select. 0b = STANDBY/LP_STANDBY based on LP_STANDBY_SEL 1b = Reserved 10b = MCU_ONLY 11b = ACTIVE
4	FAST_BIST	R/W	0b	FAST_BIST 0b = Logic and analog BIST is run at BOOT BIST. 1b = Only analog BIST is run at BOOT BIST.
3	LP_STANDBY_SEL	R/W	0b	Control to enter low power standby state: 0b = Normal standby state is used. 1b = Low power standby state is used as standby state.
2	SKIP_LP_STANDBY_EE_READ	R/W	0b	Control for regmap and regmap_rtc register resets and EEPROM read: 0b = register reset and EEPROM read are controlled by FIRST_STARTUP_DONE bit 1b = registers stay unchanged (no reset or EEPROM read)
1:0	RESERVED	R/W	0b	

Copyright © 2022 Texas Instruments Incorporated

7.7.1.117 SCRATCH_PAD_REG_1 Register (Offset = 0xC9) [Reset = 0x00]

SCRATCH_PAD_REG_1 is shown in 図 7-171 and described in 表 7-137.

Return to the 表 7-19.

図 7-176. SCRATCH_PAD_REG_1 Register

7	6	5	4	3	2	1	0
SCRATCH_PAD_1							
R/W-0b							

表 7-137. SCRATCH_PAD_REG_1 Register Field Descriptions

Bit	Field	Type	Reset	Description
7:0	SCRATCH_PAD_1	R/W	0b	Scratchpad for temporary data storage. The register is reset when VINT is disabled. The data is maintained when VINT regulator is enabled, for example during STANDBY and LP_STANDBY states.

7.7.1.118 SCRATCH_PAD_REG_2 Register (Offset = 0xCA) [Reset = 0x00]

SCRATCH_PAD_REG_2 is shown in 図 7-172 and described in 表 7-138.

Return to the 表 7-19.

図 7-177. SCRATCH_PAD_REG_2 Register

7	6	5	4	3	2	1	0
SCRATCH_PAD_2							
R/W-0b							

表 7-138. SCRATCH_PAD_REG_2 Register Field Descriptions

Bit	Field	Type	Reset	Description
7:0	SCRATCH_PAD_2	R/W	0b	Scratchpad for temporary data storage. The register is reset when VINT is disabled. The data is maintained when VINT regulator is enabled, for example during STANDBY and LP_STANDBY states.

Copyright © 2022 Texas Instruments Incorporated

7.7.1.119 SCRATCH_PAD_REG_3 Register (Offset = 0xCB) [Reset = 0x00]

SCRATCH_PAD_REG_3 is shown in 図 7-173 and described in 表 7-139.

Return to the 表 7-19.

図 7-178. SCRATCH_PAD_REG_3 Register

7	6	5	4	3	2	1	0
SCRATCH_PAD_3							
R/W-0b							

表 7-139. SCRATCH_PAD_REG_3 Register Field Descriptions

Bit	Field	Type	Reset	Description
7:0	SCRATCH_PAD_3	R/W	0b	Scratchpad for temporary data storage. The register is reset when VINT is disabled. The data is maintained when VINT regulator is enabled, for example during STANDBY and LP_STANDBY states.

7.7.1.120 SCRATCH_PAD_REG_4 Register (Offset = 0xCC) [Reset = 0x00]

SCRATCH_PAD_REG_4 is shown in 図 7-174 and described in 表 7-140.

Return to the 表 7-19.

図 7-179. SCRATCH_PAD_REG_4 Register

7	6	5	4	3	2	1	0
SCRATCH_PAD_4							
R/W-0b							

表 7-140. SCRATCH_PAD_REG_4 Register Field Descriptions

Bit	Field	Type	Reset	Description
7:0	SCRATCH_PAD_4	R/W	0b	Scratchpad for temporary data storage. The register is reset when VINT is disabled. The data is maintained when VINT regulator is enabled, for example during STANDBY and LP_STANDBY states.

Copyright © 2022 Texas Instruments Incorporated

7.7.1.121 PFSM_DELAY_REG_1 Register (Offset = 0xCD) [Reset = 0x00]

PFSM_DELAY_REG_1 is shown in 図 7-175 and described in 表 7-141.

Return to the 表 7-19.

図 7-180. PFSM_DELAY_REG_1 Register

7	6	5	4	3	2	1	0
PFSM_DELAY1							
R/W-0b							

表 7-141. PFSM_DELAY_REG_1 Register Field Descriptions

Bit	Field	Type	Reset	Description
7:0	PFSM_DELAY1	R/W	0b	Generic delay1 for PFSM use. The step size is defined by PFSM_DELAY_STEP bits. (Default from NVM memory)

7.7.1.122 PFSM_DELAY_REG_2 Register (Offset = 0xCE) [Reset = 0x00]

PFSM_DELAY_REG_2 is shown in 図 7-176 and described in 表 7-142.

Return to the 表 7-19.

図 7-181. PFSM_DELAY_REG_2 Register

7	6	5	4	3	2	1	0
PFSM_DELAY2							
R/W-0b							

表 7-142. PFSM_DELAY_REG_2 Register Field Descriptions

Bit	Field	Type	Reset	Description
7:0	PFSM_DELAY2	R/W	0b	Generic delay2 for PFSM use. The step size is defined by PFSM_DELAY_STEP bits. (Default from NVM memory)

Copyright © 2022 Texas Instruments Incorporated

7.7.1.123 PFSM_DELAY_REG_3 Register (Offset = 0xCF) [Reset = 0x00]

PFSM_DELAY_REG_3 is shown in 図 7-177 and described in 表 7-143.

Return to the 表 7-19.

図 7-182. PFSM_DELAY_REG_3 Register

7	6	5	4	3	2	1	0
PFSM_DELAY3							
R/W-0b							

表 7-143. PFSM_DELAY_REG_3 Register Field Descriptions

Bit	Field	Type	Reset	Description
7:0	PFSM_DELAY3	R/W	0b	Generic delay3 for PFSM use. The step size is defined by PFSM_DELAY_STEP bits. (Default from NVM memory)

7.7.1.124 PFSM_DELAY_REG_4 Register (Offset = 0xD0) [Reset = 0x00]

PFSM_DELAY_REG_4 is shown in 図 7-178 and described in 表 7-144.

Return to the 表 7-19.

図 7-183. PFSM_DELAY_REG_4 Register

7	6	5	4	3	2	1	0
PFSM_DELAY4							
R/W-0b							

表 7-144. PFSM_DELAY_REG_4 Register Field Descriptions

Bit	Field	Type	Reset	Description
7:0	PFSM_DELAY4	R/W	0b	Generic delay4 for PFSM use. The step size is defined by PFSM_DELAY_STEP bits. (Default from NVM memory)

Copyright © 2022 Texas Instruments Incorporated

7.7.1.125 WD_ANSWER_REG Register (Offset = 0x401) [Reset = 0x00]

WD_ANSWER_REG is shown in 図 7-179 and described in 表 7-145.

Return to the 表 7-19.

図 7-184. WD_ANSWER_REG Register

7	6	5	4	3	2	1	0
WD_ANSWER							
R/W-0b							

表 7-145. WD_ANSWER_REG Register Field Descriptions

Bit	Field	Type	Reset	Description
7:0	WD_ANSWER	R/W	0b	MCU answer byte. The MCU must write the expected reference Answer-x into this register. Each watchdog question requires four answer bytes: - Three answer bytes (Answer-3, Answer-2, Answer-1) must be written in Window-1. - The fourth (final) answer-byte (Answer-0) must be written in Window-2. The number of written answer bytes is tracked with the WD_ANSW_CNT counter in the WD_QUESTION_ANSW_CNT register. These bits only apply for Watchdog in Q&A mode.

7.7.1.126 WD_QUESTION_ANSW_CNT Register (Offset = 0x402) [Reset = 0x3C]

WD_QUESTION_ANSW_CNT is shown in 図 7-180 and described in 表 7-146.

Return to the 表 7-19.

図 7-185. WD_QUESTION_ANSW_CNT Register

7	6	5	4	3	2	1	0
RESERVED		WD_ANSW_CNT		WD_QUESTION			
R-0b		R-11b		R-1100b			

表 7-146. WD_QUESTION_ANSW_CNT Register Field Descriptions

Bit	Field	Type	Reset	Description
7:6	RESERVED	R	0b	
5:4	WD_ANSW_CNT	R	11b	Current, received watchdog-answer count state. These bits only apply for Watchdog in Q&A mode.
3:0	WD_QUESTION	R	1100b	Watchdog question. The MCU must read (or calculate) the current watchdog question value to generate correct answers. These bits only apply for Watchdog in Q&A mode.

Copyright © 2022 Texas Instruments Incorporated

7.7.1.127 WD_WIN1_CFG Register (Offset = 0x403) [Reset = 0x7F]

WD_WIN1_CFG is shown in 図 7-181 and described in 表 7-147.

Return to the 表 7-19.

図 7-186. WD_WIN1_CFG Register

7	6	5	4	3	2	1	0
RESERVED	WD_WIN1						
R/W-0b	R/W-1111111b						

表 7-147. WD_WIN1_CFG Register Field Descriptions

Bit	Field	Type	Reset	Description
7	RESERVED	R/W	0b	
6:0	WD_WIN1	R/W	1111111b	These bits are for programming the duration of Watchdog Window-1 (see Watchdog chapter). These bits can be only be written when the watchdog is in the Long Window.

7.7.1.128 WD_WIN2_CFG Register (Offset = 0x404) [Reset = 0x7F]

WD_WIN2_CFG is shown in 図 7-182 and described in 表 7-148.

Return to the 表 7-19.

図 7-187. WD_WIN2_CFG Register

7	6	5	4	3	2	1	0
RESERVED	WD_WIN2						
R/W-0b	R/W-1111111b						

表 7-148. WD_WIN2_CFG Register Field Descriptions

Bit	Field	Type	Reset	Description
7	RESERVED	R/W	0b	
6:0	WD_WIN2	R/W	1111111b	These bits are for programming the duration of Watchdog Window-2 (see Watchdog chapter). These bits can be only be written when the watchdog is in the Long Window.

Copyright © 2022 Texas Instruments Incorporated

7.7.1.129 WD_LONGWIN_CFG Register (Offset = 0x405) [Reset = 0xFF]

WD_LONGWIN_CFG is shown in 図 7-183 and described in 表 7-149.

Return to the 表 7-19.

図 7-188. WD_LONGWIN_CFG Register

7	6	5	4	3	2	1	0
WD_LONGWIN							
R/W-11111111b							

表 7-149. WD_LONGWIN_CFG Register Field Descriptions

Bit	Field	Type	Reset	Description
7:0	WD_LONGWIN	R/W	11111111b	These bits are for programming the duration of Watchdog Long Window (see Watchdog chapter). These bits can be only be written when the watchdog is in the Long Window. (Default from NVM memory)

7.7.1.130 WD_MODE_REG Register (Offset = 0x406) [Reset = 0x02]

WD_MODE_REG is shown in 図 7-184 and described in 表 7-150.

Return to the 表 7-19.

図 7-189. WD_MODE_REG Register

7	6	5	4	3	2	1	0
RESERVED					WD_PWRHOLD	WD_MODE_SELECT	WD_RETURN_LONGWIN
R/W-0b					R/W-0b	R/W-1b	R/W-0b

表 7-150. WD_MODE_REG Register Field Descriptions

Bit	Field	Type	Reset	Description
7:3	RESERVED	R/W	0b	
2	WD_PWRHOLD	R/W	0b	Watchdog hold on. MCU can write this bit to 1. MCU needs to clear this bit to get out of the Long Window: 0b = watchdog goes out of the Long Window and starts the first watchdog-sequence when the configured Long Window time-interval elapses 1b = watchdog stays in Long Window
1	WD_MODE_SELECT	R/W	1b	Watchdog mode-select: MCU can set this to required value only when watchdog is in the Long Window. 0b = Trigger Mode 1b = Q&A mode.
0	WD_RETURN_LONGWIN	R/W	0b	MCU can set this bit to put the watchdog from operating back to the Long Window (see Watchdog chapter): 0b = Watchdog continues operating 1b = Watchdog returns to Long-Window after completion of the current watchdog-sequence.

Copyright © 2022 Texas Instruments Incorporated

7.7.1.131 WD_QA_CFG Register (Offset = 0x407) [Reset = 0x0A]

WD_QA_CFG is shown in 図 7-185 and described in 表 7-151.

Return to the 表 7-19.

図 7-190. WD_QA_CFG Register

7	6	5	4	3	2	1	0
WD_QA_FDBK		WD_QA_LFSR		WD_QUESTION_SEED			
R/W-0b		R/W-0b		R/W-1010b			

表 7-151. WD_QA_CFG Register Field Descriptions

Bit	Field	Type	Reset	Description
7:6	WD_QA_FDBK	R/W	0b	Feedback configuration bits for the watchdog question. These bits control the sequence of the generated questions and respective reference answers (see Watchdog chapter). These bits are only used for the watchdog in Q&A mode. These bits can be only be written when the watchdog is in the Long Window.
5:4	WD_QA_LFSR	R/W	0b	LFSR-equation configuration bits for the watchdog question (see Watchdog chapter). These bits are only used for the watchdog in Q&A mode. These bits can be only be written when the watchdog is in the Long Window.
3:0	WD_QUESTION_SEED	R/W	1010b	The watchdog question-seed value (see Watchdog chapter). The MCU updates the question-seed value to generate a set of new questions. These bits can be only be written when the watchdog is in the Long Window.

Copyright © 2022 Texas Instruments Incorporated

7.7.1.132 WD_ERR_STATUS Register (Offset = 0x408) [Reset = 0x00]

WD_ERR_STATUS is shown in 図 7-186 and described in 表 7-152.

Return to the 表 7-19.

図 7-191. WD_ERR_STATUS Register

7	6	5	4	3	2	1	0
WD_RST_INT	WD_FAIL_INT	WD_ANSW_ERR	WD_SEQ_ERR	WD_ANSW_EARLY	WD_TRIG_EARLY	WD_TIMEOUT	WD_LONGWIN_TIMEOUT_INT
R/W1C-0b	R/W1C-0b	R/W1C-0b	R/W1C-0b	R/W1C-0b	R/W1C-0b	R/W1C-0b	R/W1C-0b

表 7-152. WD_ERR_STATUS Register Field Descriptions

Bit	Field	Type	Reset	Description
7	WD_RST_INT	R/W1C	0b	Latched status bit to indicate that the device went through warm reset due to WD_FAIL_CNT[3:0] > (WD_FAIL_TH[2:0] + WD_RST_TH[2:0]). Write 1 to clear.
6	WD_FAIL_INT	R/W1C	0b	Latched status bit to indicate that the watchdog has cleared the ENABLE_DRV bit due to WD_FAIL_CNT[3:0] > WD_FAIL_TH[2:0]. Write 1 to clear.
5	WD_ANSW_ERR	R/W1C	0b	Latched status bit to indicate that the watchdog has detected an incorrect answer-byte. Write 1 to clear. This bit only applies for Watchdog in Q&A mode.
4	WD_SEQ_ERR	R/W1C	0b	Latched status bit to indicate that the watchdog has detected an incorrect sequence of the answer-bytes. Write 1 to clear. This bit only applies for Watchdog in Q&A mode.
3	WD_ANSW_EARLY	R/W1C	0b	Latched status bit to indicate that the watchdog has received the final answer-byte in Window-1. Write 1 to clear. This bit only applies for Watchdog in Q&A mode.
2	WD_TRIG_EARLY	R/W1C	0b	Latched status bit to indicate that the watchdog has received the watchdog-trigger in Window-1. Write 1 to clear. This bit only applies for Watchdog in Trigger mode.
1	WD_TIMEOUT	R/W1C	0b	Latched status bit to indicate that the watchdog has detected a time-out event in the started watchdog sequence. Write 1 to clear.
0	WD_LONGWIN_TIMEOUT_INT	R/W1C	0b	Latched status bit to indicate that device went through warm reset due to elapse of Long Window time-interval. Write 1 to clear interrupt.

Copyright © 2022 Texas Instruments Incorporated

7.7.1.133 WD_THR_CFG Register (Offset = 0x409) [Reset = 0xFF]

WD_THR_CFG is shown in 図 7-187 and described in 表 7-153.

Return to the 表 7-19.

図 7-192. WD_THR_CFG Register

7	6	5	4	3	2	1	0
WD_RST_EN	WD_EN	WD_FAIL_TH			WD_RST_TH		
R/W-1b	R/W-1b	R/W-111b			R/W-111b		

表 7-153. WD_THR_CFG Register Field Descriptions

Bit	Field	Type	Reset	Description
7	WD_RST_EN	R/W	1b	Watchdog reset configuration bit: This bit can be only be written when the watchdog is in the Long Window. 0b = No warm reset when WD_FAIL_CNT[3:0] > (WD_FAIL_TH[2:0] + WD_RST_TH[2:0]) 1b = Warm reset when WD_FAIL_CNT[3:0] > (WD_FAIL_TH[2:0] + WD_RST_TH[2:0]).
6	WD_EN	R/W	1b	Watchdog enable configuration bit: This bit can be only be written when the watchdog is in the Long Window. (Default from NVM memory) 0b = watchdog disabled. MCU can set ENABLE_DRV bit to 1 if all other interrupt status bits are cleared 1b = watchdog enabled. MCU can set ENABLE_DRV bit to 1 if: - watchdog is out of the Long Window - WD_FAIL_CNT[3:0] =< WD_FAIL_TH[2:0] - WD_FIRST_OK=1 - all other interrupt status bits are cleared.
5:3	WD_FAIL_TH	R/W	111b	Configuration bits for the 1st threshold of the watchdog fail counter: Device clears ENABLE_DRV bit when WD_FAIL_CNT[3:0] > WD_FAIL_TH[2:0]. These bits can be only be written when the watchdog is in the Long Window.
2:0	WD_RST_TH	R/W	111b	Configuration bits for the 2nd threshold of the watchdog fail counter: Device goes through warm reset when WD_FAIL_CNT[3:0] > (WD_FAIL_TH[2:0] + WD_RST_TH[2:0]). These bits can be only be written when the watchdog is in the Long Window.

Copyright © 2022 Texas Instruments Incorporated

7.7.1.134 WD_FAIL_CNT_REG Register (Offset = 0x40A) [Reset = 0x20]

WD_FAIL_CNT_REG is shown in 図 7-188 and described in 表 7-154.

Return to the 表 7-19.

図 7-193. WD_FAIL_CNT_REG Register

7	6	5	4	3	2	1	0
RESERVED	WD_BAD_EVENT	WD_FIRST_OK	RESERVED	WD_FAIL_CNT			
R-0b	R-0b	R-1b	R-0b	R-0b			

表 7-154. WD_FAIL_CNT_REG Register Field Descriptions

Bit	Field	Type	Reset	Description
7	RESERVED	R	0b	
6	WD_BAD_EVENT	R	0b	Status bit to indicate that the watchdog has detected a bad event in the current watchdog sequence. The device clears this bit at the end of the watchdog sequence.
5	WD_FIRST_OK	R	1b	Status bit to indicate that the watchdog has detected a good event. The device clears this bit when the watchdog goes to the Long Window.
4	RESERVED	R	0b	
3:0	WD_FAIL_CNT	R	0b	Status bits to indicate the value of the Watchdog Fail Counter. The device clears these bits when the watchdog goes to the Long Window.

Copyright © 2022 Texas Instruments Incorporated

8 Application and Implementation

注

以下のアプリケーション情報は、TI の製品仕様に含まれるものではなく、TI ではその正確性または完全性を保証いたしません。個々の目的に対する製品の適合性については、お客様の責任で判断していただくことになります。お客様は自身の設計実装を検証しテストすることで、システムの機能を確認する必要があります。

8.1 Application Information

The device is a multi-phase step-down converter with four switcher cores, which generate four single-phase regulator outputs.

8.2 Typical Applications

The configuration is shown in the figure below.

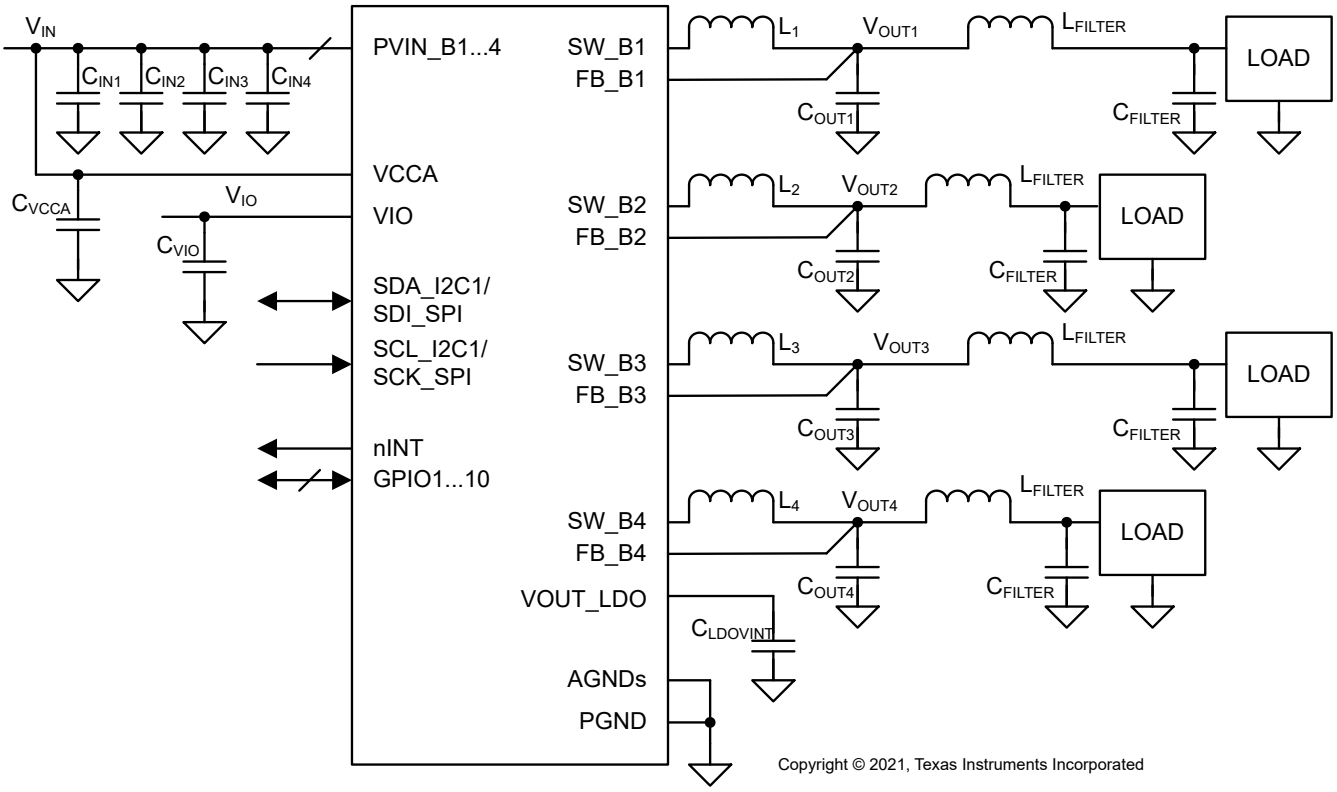

図 8-1. Four 1-Phase configuration

8.2.1 Design Requirements

8.2.1.1 Buck Inductor Selection

The buck inductors L_1, L_2, L_3, and L_4 are shown in the セクション 8.2. The inductance and DCR of the inductor affects the control loop of the buck regulator. TI recommends using inductors similar to those listed in 表 8-1. Pay attention to the saturation current and temperature rise current of the inductor. Check that the saturation current is higher than the peak current limit and the temperature rise current is higher than the maximum expected rms output current. DC resistance of the inductor must be minimized for good efficiency at high-current condition. The inductor AC loss (resistance) also affects conversion efficiency. Higher Q factor at switching frequency usually gives better efficiency at light load to middle load. Shielded inductors are preferred as they radiate less noise.

表 8-1. Recommended Inductors

MANUFACTURER	PART NUMBER	VALUE	DIMENSIONS L × W × H (mm)	RATED DC CURRENT, I_{SAT} typical (maximum) / I_{TEMP} typical (maximum) (A)	DCR typical (maximum) (mΩ)
TDK	TFM322512ALMAR47 MTAA	0.47 µH (20%)	3.2 × 2.5 × 1.2	7.6 (6.9) / 6.1 (5.3)	16 (21)
TDK	TFM252012ALMAR47 MTAA	0.47 µH (20%)	2.5 × 2.0 × 1.2	6.5 (5.8) / 5.6 (4.9)	19 (24)
TDK	TFM201610ALMAR47 MTAA	0.47 µH (20%)	2.0 × 1.6 × 1.0	5.0 (4.5) / 4.5 (3.9)	28 (39)
Murata	DFE252012PD-R47M	0.47 µH (20%)	2.5 × 2.0 × 1.2	– (5.2) / – (4)(1)	- (27)
Murata	DFE2HCAHR47MJ0	0.47 µH (20%)	2.5 × 2.0 × 1.2	– (5.1) / – (4.5)	19 (25)

(1) Operating temperature range is up to 125°C including self temperature rise.

Copyright © 2022 Texas Instruments Incorporated

8.2.1.2 Buck Input Capacitor Selection

The buck input capacitors C_{IN1}, C_{IN2}, C_{IN3}, and C_{IN4} are shown in the セクション 8.2. A ceramic input bypass capacitor of 10 µF is required for each phase of the regulator. Place the input capacitor as close as possible to the PVIN_Bx pin and PGND pin of the device. A larger value or higher voltage rating improves the input voltage filtering. Use X7R type of capacitors, not Y5V or F. DC bias characteristics capacitors must be considered, minimum effective input capacitance to ensure good performance is 3 µF per buck input at maximum input voltage including tolerances and ambient temperature range. See 表 8-2.

The input filter capacitor supplies current to the high-side FET switch in the first half of each cycle and reduces voltage ripple imposed on the input power source. A ceramic capacitor with low ESR provides the best noise filtering of the input voltage spikes due to this rapidly changing current. Select an input filter capacitor with sufficient ripple current rating. In addition ferrite can be used in front of the input capacitor to reduce the EMI.

For optimal performance, additional 1 µF 3-terminal input capacitors are required. Buck1 and buck2 can share one 3-T capacitor and buck3 and buck4 can share one 3-T capacitor. See 表 8-2 .

表 8-2. Recommended Input Capacitors (X7R Dielectric)

MANUFACTURER	PART NUMBER	VALUE	CASE SIZE	DIMENSIONS L × W × H (mm)	VOLTAGE RATING
Murata	GCM21BR71A106KE22	10 µF (10%)	0805	2 × 1.25 × 1.25	10 V
TDK	CGA4J1X7S1C106K125AB	10 µF (10%)	0805	2 × 1.25 × 1.25	10 V
Murata	NFM18HC105C1C3 (3-T)	1 µF (20%)	0603	1.6 × 0.8 × 0.7	16 V
TDK	YFF18AC0J105M (3-T)	1 µF (20%)	0603	1.6 × 0.8 × 0.6	6.3 V

8.2.1.3 Buck Output Capacitor Selection

The buck output capacitors C_{OUT1}, C_{OUT2}, C_{OUT3}, and C_{OUT4} are shown in セクション 8.2. Use ceramic local output capacitors, X7R or X7T types; do not use Y5V or F. DC bias voltage characteristics of ceramic capacitors must be considered. The output filter capacitor smooths out current flow from the inductor to the load, helps maintain a steady output voltage during transient load changes and reduces output voltage ripple. These capacitors must be selected with sufficient capacitance and sufficiently low ESR and ESL to perform these functions. Minimum effective output capacitance (including the DC voltage roll-off, tolerances, aging and temperature effects) is defined in Electrical Characteristics table for different buck configurations.

The output voltage ripple is caused by the charging and discharging of the output capacitor and also due to its R_{ESR}. The R_{ESR} is frequency dependent (as well as temperature dependent); make sure the value used for selection process is at the switching frequency of the part. See 表 8-3.

POL capacitors (C_{POL1}, C_{POL2}, C_{POL3}, C_{POL4}) can be used to improve load transient performance and to decrease the ripple voltage. A higher output capacitance improves the load step behavior and reduces the output voltage ripple. Note that the output capacitor may be the limiting factor in the output voltage ramp and the maximum total output capacitance listed in electrical characteristics must not be exceeded. At shutdown the output voltage is discharged to 0.15 V level using forced-PWM operation. The discharging of the output capacitor can increase the input voltage if the load current is small and the output capacitor is large. Below 0.15 V level the output capacitor is discharged by the internal discharge resistor and with large capacitor more time is required to settle V_{OUT} down as a consequence of the increased time constant.

表 8-3. Recommended Output Capacitors (X7R or X7T Dielectric)

MANUFACTURER	PART NUMBER	VALUE	CASE SIZE	DIMENSIONS L × W × H (mm)	VOLTAGE RATING
Murata	GCM32EC71A476KE02	47 µF (10%)	1210		10 V
TDK	CGA6P1X7S1A476M250AC	47 µF (20%)	1210		10 V
Murata	GCM32ER70J476ME19	47 µF (20%)	1210	3.2 × 2.5 × 2.5	6.3 V
TDK	CGA6P1X7S0J476M250AC	47 µF (20%)	1210		6.3 V
TDK	CGA5L1X7T0G476M	47 µF (20%)	1206		4 V
Murata	GCM31CR71A226KE02	22 µF (10%)	1206	3.2 × 1.6 × 1.6	10 V
TDK	CGA5L1X7S1A226M160AC	22 µF (20%)	1206		10 V
Murata	GCM21BD70J226ME36	22 µF (20%)	0805	2.0 × 1.25 × 1.25	6.3 V
TDK	CGA4J1X7T0J226M	22 µF (20%)	0805		6.3 V
Murata	NFM18HC106D0G (3-T)	10 µF (20%)	0603	1.6 × 0.8 × 1.25	4 V

Every buck output requires a local output capacitor to form the capacitive part of the LC output filter. These local output capacitors must be placed as close to the inductor as possible to minimize electromagnetic emissions. See セクション 8.3.1 for more information about component placement.

To achieve better ripple and transient performance, additional capacitors are recommended to compensate the parasitic impedances due to board routing and provide faster transient response to a load step. These caps are placed close to the point of load (POL). POL capacitor usage varies based on the application and generally follows the SoC or FPGA input capacitor requirements. Low ESL 3-terminal caps are recommended, as their high performance can help reduce the total number of capacitors required which simplifies board layout design and saves board area. They also help to reduce the total cost of the solution.

図 8-2 is an example power distribution network (PDN) of local and POL caps at the output of a buck for optimal ripple and transient performance. 表 8-4 lists the local and POL capacitors used to validate the buck transient and ripple performance specified in the parametric table. 表 8-5 lists the actual capacitor part numbers used for the different use case tests. It is recommended to simulate and validate that the capacitor network chosen for a particular design meets the desired requirements as these are provided as guidelines.

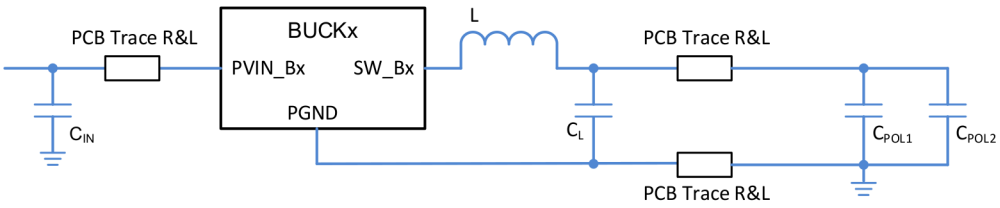

図 8-2. Buck Regulators Power Distribution Network (PDN)

Copyright © 2022 Texas Instruments Incorporated

表 8-4. Local and POL Capacitors and Inductors used for Buck Use Case Simulations and Validations

Use Case #	Use Case Test Condition	Fsw	Phase Config.	L	C_L per phase	R_{PCB} per phase[1]	L_{PCB} per phase[2]	C_{POL1}	C_{POL2}
1	8.8 MHz Min C	8.8 MHz	1 PH	470 nH	22 µF × 2				
2	8.8 MHz Max C	8.8 MHz	1 PH	470 nH	22 µF × 4				
3	8.8 MHz Filter1 Min C	8.8 MHz	1 PH	470 nH	22 µF × 2, point of feedback			Additional inductor (100nH) and capacitors (20 µF total) for filtering	
4	8.8 MHz Filter1 Max C	8.8 MHz	1 PH	470 nH	22 µF x 4, point of feedback			Additional inductor (100 nH) and capacitors (80 µF total) for filtering	
5	8.8 MHz Filter2 Min C	8.8 MHz	1 PH	470 nH	22 µF × 2, point of feedback			Ferrite and capacitors (20 µF total) for filtering	
6	8.8 MHz Filter2 Max C	8.8 MHz	1 PH	470 nH	22 µF × 4, point of feedback			Ferrite and capacitors (80 µF total) for filtering	

1. R_{PCB} is the PCB wiring resistance between local and POL capacitors including both positive and negative paths. For multi-phase outputs the total resistance is divided by the number of phases.
2. L_{PCB} is the PCB wiring inductance between local and POL capacitors including both positive and negative paths. For multi-phase outputs the total inductance is divided by the number of phases.

Power input and output wiring parasitic resistance and inductance must be minimized.

表 8-5. Capacitor and Inductor Part Numbers in Buck Use Case Simulations and Validations

Component	Component Value	Component Part Number	Description
C_{IN} (1)	1 µF	NFM18HC105C1C3(2)	MuRata 3-T Cap: 1.0 µF ±20% 16 V, X7S, 0603, -55°C to 125°C
C_L	22 µF	GCM21BD70J226ME36L	MuRata Cap: 22 µF±20%, 6.3 V, X7T, 0805
C_{POL}	1 µF	GCM188R71C105KA64J	MuRata Cap: 1 µF±10%, 16 V, X7R, 0603
C_{POL}	10 µF	GCM21BR71A106KE22L	MuRata Cap: 10 µF±10%, 10 V, X7R, 0805
C_{POL}	22 µF	GCM21BD70J226ME36L	MuRata Cap: 22 µF±20%, 6.3 V, X7T, 0805
L	470 nH	TFM252012ALMAR47MTAA	TDK Inductor: 0.47 µH, 20 V, 24 mΩ DCR, 5.8A Isat, 4.9A Itemp, -55°C to 150°C
$L_{Filter1}$	100 nH	NLCV32T-R10M-EFRD	TDK Inductor: 100 nH, 2.85 A, 24 mΩ DCR
$Ferrite_{Filter2}$		MPZ2012S300A	TDK Ferrite: 30 Ω at 100 MHz, 6 A

(1) One 3-T capacitor is shared with Buck1/Buck2 and Buck3/Buck4 inputs. Additional bulk capacitors are connected to PVIN_x power supplies.
(2) Low ESL 3-terminal cap

8.2.1.4 LDO Output Capacitor Selection

A 2.2-µF capacitor is recommended for internal LDO output. See 表 8-6 for the specific part number of the recommended output capacitors.

表 8-6. Recommended LDO Output Capacitors(1)

MANUFACTURER	PART NUMBER	VALUE	EIA size code	SIZE (mm)
TDK	CGA3E1X7S1C225M080AC	2.2 µF, 16 V, X7S	0603	1.6 × 0.8
Murata	GCM188R70J225KE22	2.2 µF, 16 V, X7R	0603	1.6 × 0.8

(1) Component minimum and maximum tolerance values are specified in the electrical parameters section of each IP.

8.2.1.5 VCCA Supply Filtering Components

The VCCA input is used to power LDOVINT internal regulator and other internal functions. The VCCA input pin is always connected in parallel with the buck input pins (PVIN_Bx pins). See 表 8-7 for recommended components for VCCA input supply filtering.

表 8-7. Recommended VCCA Supply Filtering Components

MANUFACTURER	PART NUMBER	VALUE	CASE SIZE	DIMENSIONS L × W × H (mm)	VOLTAGE RATING (V)
Murata	GCM155C71A474KE36	470 nF	0402	1.0 × 0.5 × 0.5	10
TDK	CGA2B3X7S1A474K050BB	470 nF	0402	1.0 × 0.5 × 0.5	10

表 8-8. Recommended VIO Capacitor

COMPONENT	MANUFACTURER	PART NUMBER	VALUE	EIA SIZE CODE	SIZE (mm)	USED FOR VALIDATION
Capacitor	Murata	GCM155C71A474KE36	0.47 µF, 10 V, X7S	0402	1.0 × 0.5	Yes
Capacitor	TDK	CGA2B3X7S1A474K050BB	0.47 µF, 10 V, X7S	0402	1.0 × 0.5	—

8.2.2 Detailed Design Procedure

The performance of the device depends greatly on the care taken in designing the printed circuit board (PCB). The use of low-inductance and low serial-resistance ceramic capacitors is strongly recommended, while correct grounding is crucial. Attention must be given to decoupling the power supplies. Decoupling capacitors must be connected close to the device and between the power and ground pins to support high peak currents being drawn from system power rail during turn on of the switching MOSFETs. Keep input and output traces as short as possible, because trace inductance, resistance, and capacitance can easily become the performance limiting items. The separate power pins PVIN_Bx are not connected together internally. Connect the PVIN_Bx power connections together outside the package using power plane construction.

8.2.3 Voltage Scaling Precautions

Voltage scaling behavior depends on the set slew rate and output capacitance. Therefore there may be limitations on maximum capacitance with certain slew rate settings. Worst case over- and undershoot also depends on the phase margin of the buck converter. Good phase margin mitigates the over- and undershoot. Reducing the output voltage slew rate reduces the slew rate current thus reducing the worst case over- and undershoot.

Copyright © 2022 Texas Instruments Incorporated

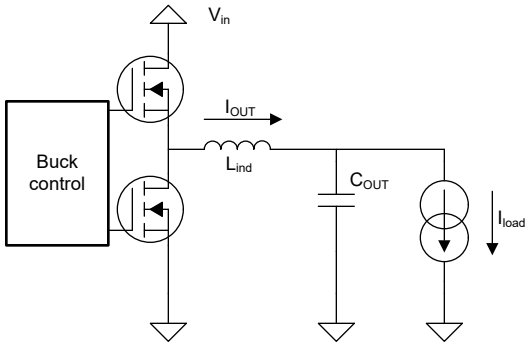

図 8-3. Power stage

The following equations must be met to ensure the output voltage scaling with regulator switching frequency:

$$I_{\text{SR_vout}} + I_{\text{load_max}} \leq I_{\text{out_max}} \tag{27}$$

$$I_{\text{out_min}} \leq I_{\text{load_min}} - I_{\text{SR_vout}} \tag{28}$$

Where $I_{\text{SR_vout}} = \text{SR}_{\text{Vout}} C_{\text{out}}$

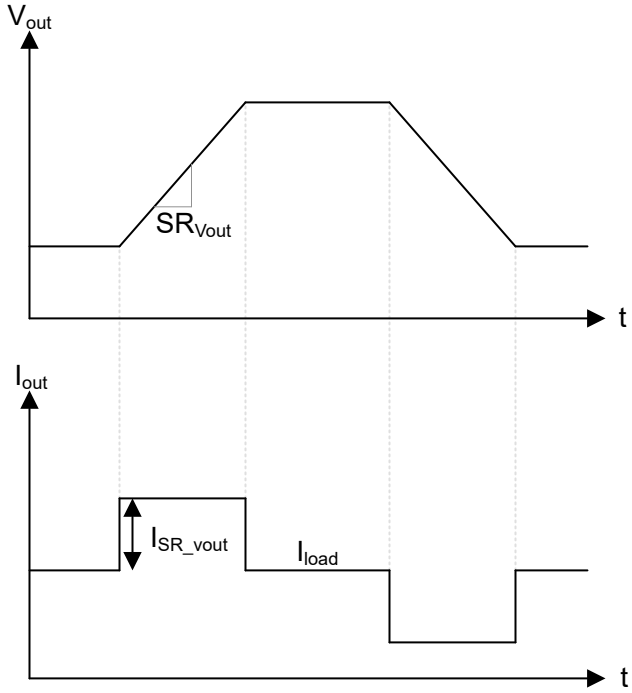

図 8-4. Voltage ramp

The worst case overshoot can be calculated with the following equations.

$$V_{\text{overshoot}} = \frac{t_{\text{Iout_scale_down}} I_{\text{SR_vout}}}{2C_{\text{out}}} \tag{29}$$

Where $t_{\text{Iout_scale_down}} = \frac{I_{\text{SR_vout}}}{\text{SR}_{\text{Iout_scale_down}}}$ and $\text{SR}_{\text{Iout_scale_down}} = \frac{V_{\text{out}}}{L_{\text{ind}}}$.

After substitutions

$$V_{\text{overshoot}} = \frac{\text{SR}_{\text{Vout}}^{2} C_{\text{out}} L_{\text{ind}}}{2V_{\text{out}}} \tag{30}$$

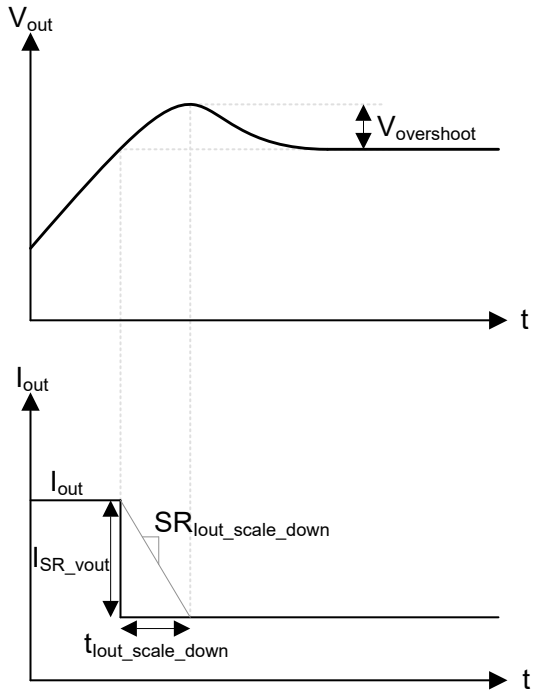

図 8-5. Overshoot

The worst case undershoot can be calculated with the following equations

$$V_{\text{undershoot}} = \frac{t_{\text{Iout_scale_up}} I_{\text{SR_vout}}}{2C_{\text{out}}} \tag{31}$$

Where $t_{\text{Iout_scale_up}} = \frac{I_{\text{SR_vout}}}{\text{SR}_{\text{Iout_scale_up}}}$ and $\text{SR}_{\text{Iout_scale_up}} = \frac{V_{\text{in}} - V_{\text{out}}}{L_{\text{ind}}}$.

After substitutions

$$V_{\text{undershoot}} = \frac{\text{SR}_{\text{Vout}}^{2} C_{\text{out}} L_{\text{ind}}}{2(V_{\text{in}} - V_{\text{out}})} \tag{32}$$

Copyright © 2022 Texas Instruments Incorporated

8.2.4 Application Curves

V_{IN} = 3.3V, V_{OUT} = 1.0V, T_A = 25°C unless otherwise noted.

Efficiency results for other use cases can be estimated using PEET-GUI,

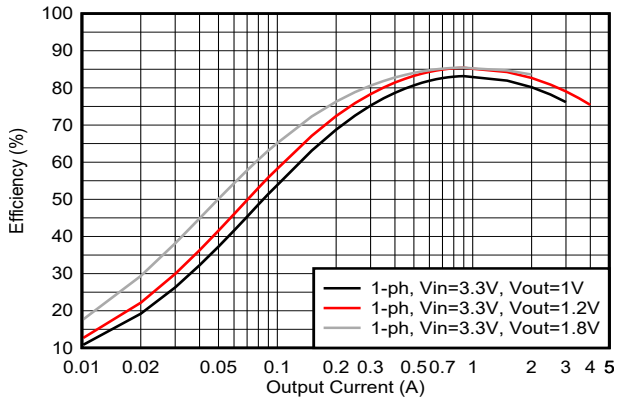

図 8-6. Efficiency in 8.8MHz 1-Phase, Force PWM Mode

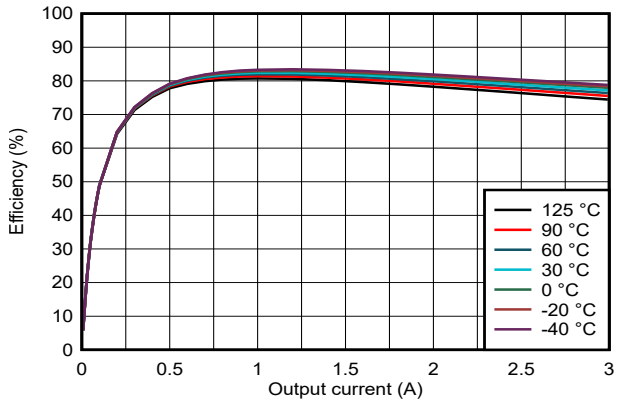

図 8-7. Efficiency in 8.8MHz 1-Phase, Force PWM Mode

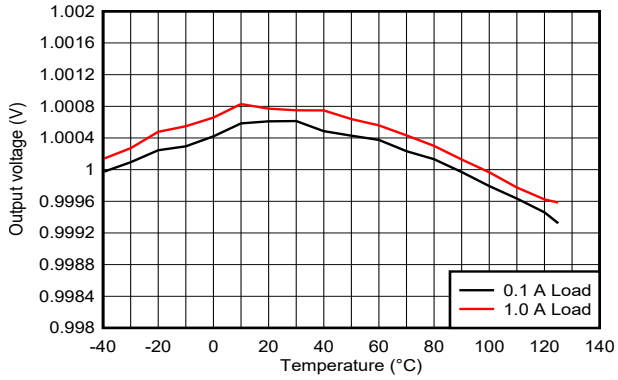

I_{LOAD} = 0.1A and 1A

図 8-8. Output Voltage Accuracy 8.8MHz Single Phase Mode

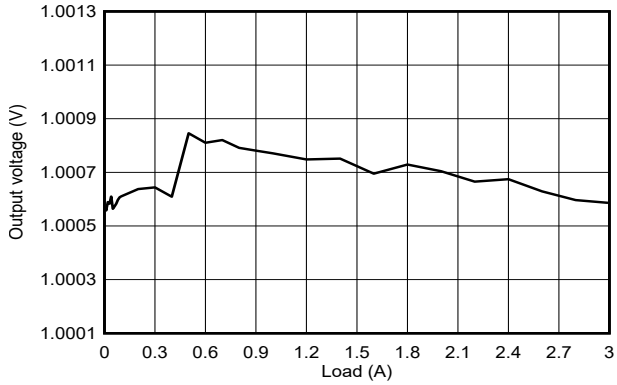

図 8-9. Load Regulation, FPWM Mode

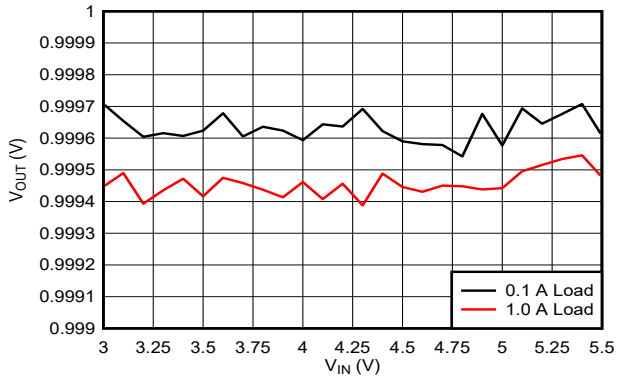

図 8-10. Line Regulation

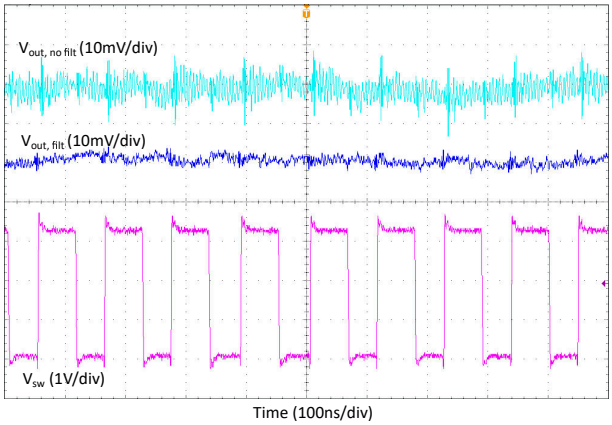

I_{LOAD} = 200 mA V_{OUT} = 1.8 V

図 8-11. Output Voltage Ripple 8.8 MHz Single Phase. FPWM mode. L = 100 nH.

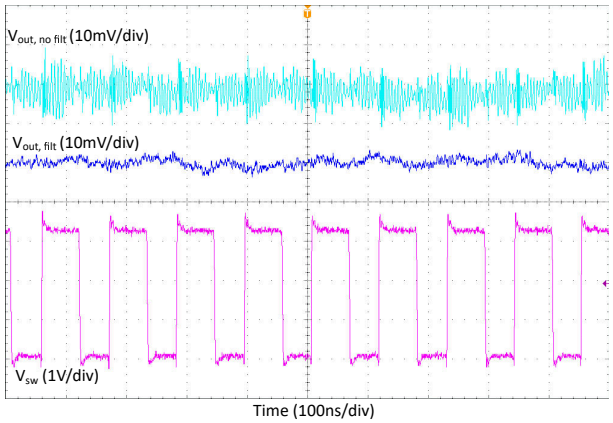

I_{LOAD} = 200 mA V_{OUT} = 1.8 V

図 8-12. Output Voltage Ripple 8.8 MHz Single Phase. FPWM mode. L = 33 nH.

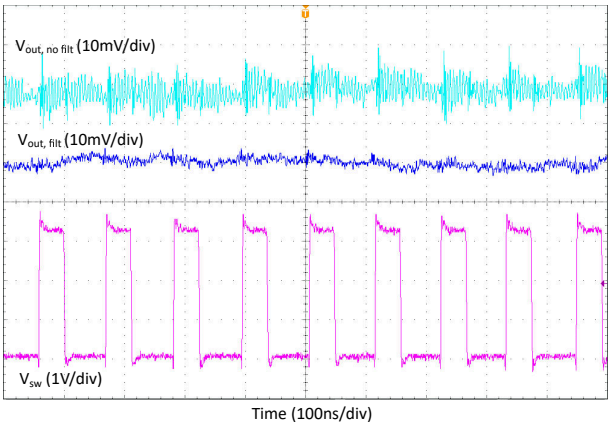

I_{LOAD} = 200 mA V_{OUT} = 1.2 V

図 8-13. Output Voltage Ripple 8.8 MHz Single Phase. FPWM mode. L = 100 nH.

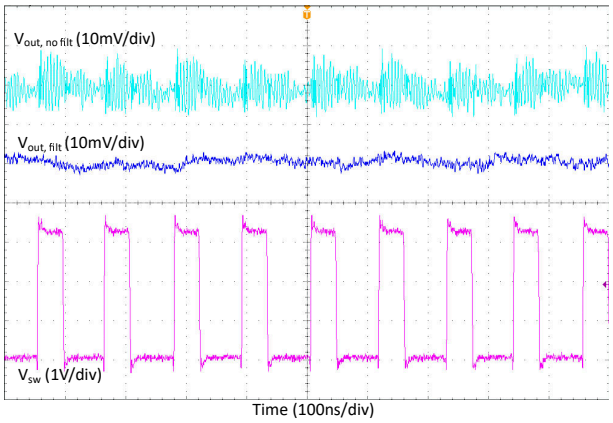

I_{LOAD} = 200 mA V_{OUT} = 1.2 V

図 8-14. Output Voltage Ripple 8.8 MHz Single Phase. FPWM mode. L = 33 nH.

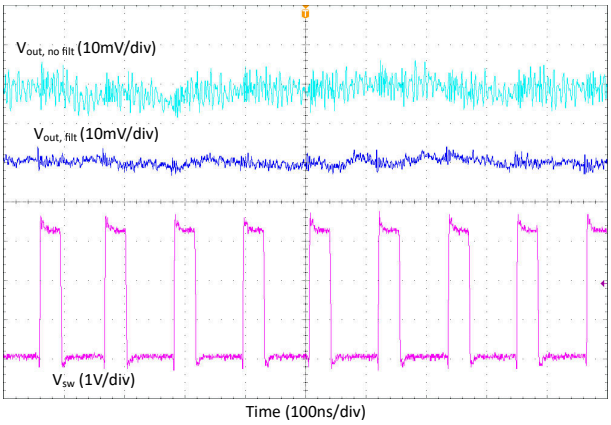

I_{LOAD} = 200 mA V_{OUT} = 1 V

図 8-15. Output Voltage Ripple 8.8 MHz Single Phase. FPWM mode. L = 100 nH.

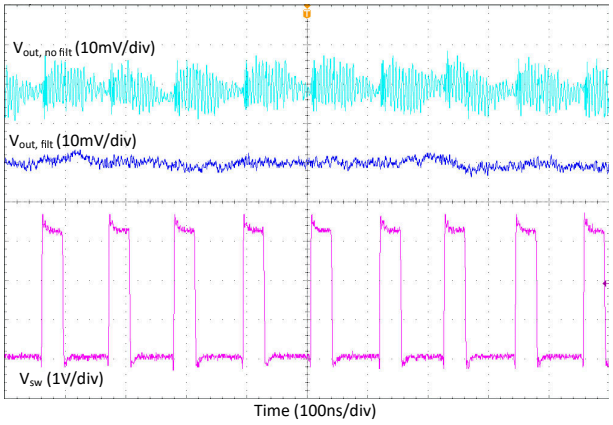

I_{LOAD} = 200 mA V_{OUT} = 1 V

図 8-16. Output Voltage Ripple 8.8 MHz Single Phase. FPWM mode. L = 33 nH.

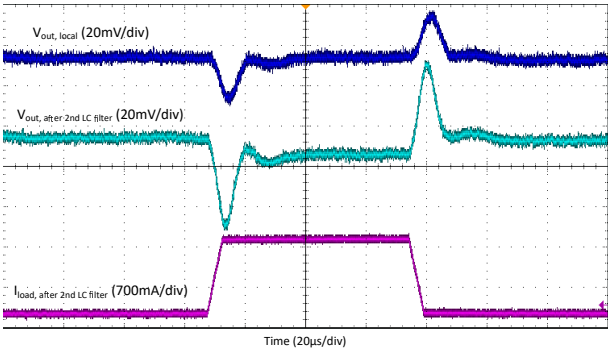

Load, after filters 0.5 to 1.8A, $T_r = T_f$ = 4µs (2 parallel filters) Vout = 1.8V

図 8-17. Load Transient Response, FPWM Mode. 8.8 MHz Single Phase.

Copyright © 2022 Texas Instruments Incorporated

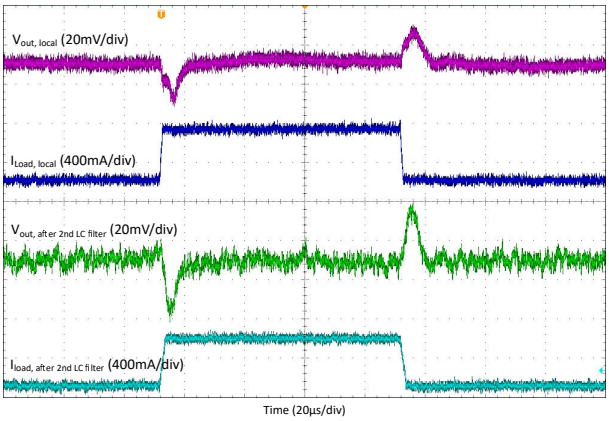

Load1, local 1.45A to 2A, $T_r = T_f = 1\mu s$, Load2, after filter 0.5A to 1A, $T_r = T_f = 2\mu s$ Vout = 1.2V

図 8-18. Load Transient Response, FPWM Mode. 8.8 MHz Single Phase.

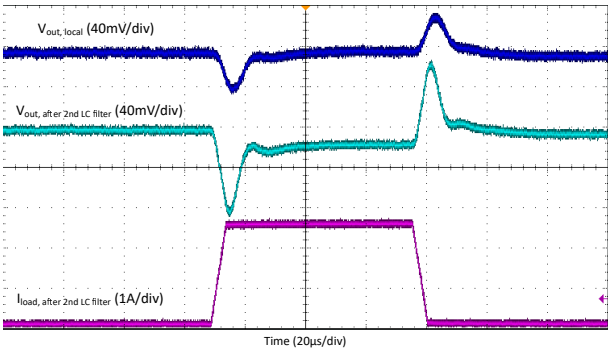

Load, after filters 0 to 2.5A, $T_r = T_f = 4\mu s$ (2 parallel filters) Vout = 1.0V

図 8-19. Load Transient Response, FPWM Mode. 8.8 MHz Single Phase.

8.3 Layout

8.3.1 Layout Guidelines

The high frequency and large switching currents of the device make the choice of layout important. Good power supply results only occur when care is given to correct design and layout. Layout affects noise pickup and generation and can cause a good design to perform with less-than-expected results. With a range of output currents from milliamps to 10 A and over, good power supply layout is much more difficult than most general PCB design. Use the following steps as a reference to ensure the device is stable and maintains correct voltage and current regulation across its intended operating voltage and current range.

1. Place C_{IN} as close as possible to the PVIN_Bx pin and the PGND pin. Route the V_{IN} trace wide and thick to avoid IR drops. The trace between the positive node of the input capacitor and the PVIN_Bx pins of the device, as well as the trace between the negative node of the input capacitor and power PGND pin, must be kept as short as possible. The input capacitance provides a low-impedance voltage source for the switching converter. The inductance of the connection is the most important parameter of a local decoupling capacitor — parasitic inductance on these traces must be kept as small as possible for correct device operation. The parasitic inductance can be reduced by using a ground plane as close as possible to top layer by using thin dielectric layer between top layer and ground plane.
2. The output filter, consisting of C_{OUT} and L, converts the switching signal at SW_Bx to the noiseless output voltage. The output filter must be placed as close as possible to the device keeping the switch node small, for best EMI behavior. Route the traces between the output capacitors of the device and the load direct and wide to avoid losses due to the IR drop.
3. Input for analog blocks (VCCA and AGND) must be isolated from noisy signals. Connect VCCA directly to a quiet system voltage node and AGND to a quiet ground point where no IR drop occurs. Place the decoupling capacitor as close as possible to the VCCA pin.
4. If the processor load supports remote voltage sensing, connect the feedback pins FB_Bx of the device to the respective sense pins on the processor. The sense lines are susceptible to noise. They must be kept away from noisy signals such as PGND, PVIN_Bx, and SW_Bx, as well as high bandwidth signals such as the I^2C. Avoid both capacitive and inductive coupling by keeping the sense lines short, direct, and close to each other. Run the lines in a quiet layer. Isolate them from noisy signals by a voltage or ground plane if possible. Running the signal as a differential pair is recommended. If series resistors are used for load current measurement, place them after connection of the voltage feedback.
5. PGND, PVIN_Bx, and SW_Bx must be routed on thick layers. They must not surround inner signal layers, that are not able to withstand interference from noisy PGND, PVIN_Bx and SW_Bx.

Copyright © 2022 Texas Instruments Incorporated

Due to the small package of this converter and the overall small solution size, the thermal performance of the PCB layout is important. Many system-dependent parameters such as thermal coupling, airflow, added heat sinks and convection surfaces, and the presence of other heat-generating components affect the power dissipation limits of a given component. Proper PCB layout, focusing on thermal performance, results in lower die temperatures. Wide and thick power traces come with the ability to sink dissipated heat. The heat dissipation can be improved further on multi-layer PCB designs with vias to different planes, that results in reduced junction-to-ambient ($R_{\theta JA}$) and junction-to-board ($R_{\theta JB}$) thermal resistances and thereby reduces the device junction temperature, T_J. TI strongly recommends to perform of a careful system-level 2D or full 3D dynamic thermal analysis at the beginning product design process, by using a thermal modeling analysis software.

Copyright © 2022 Texas Instruments Incorporated

8.3.2 Layout Example

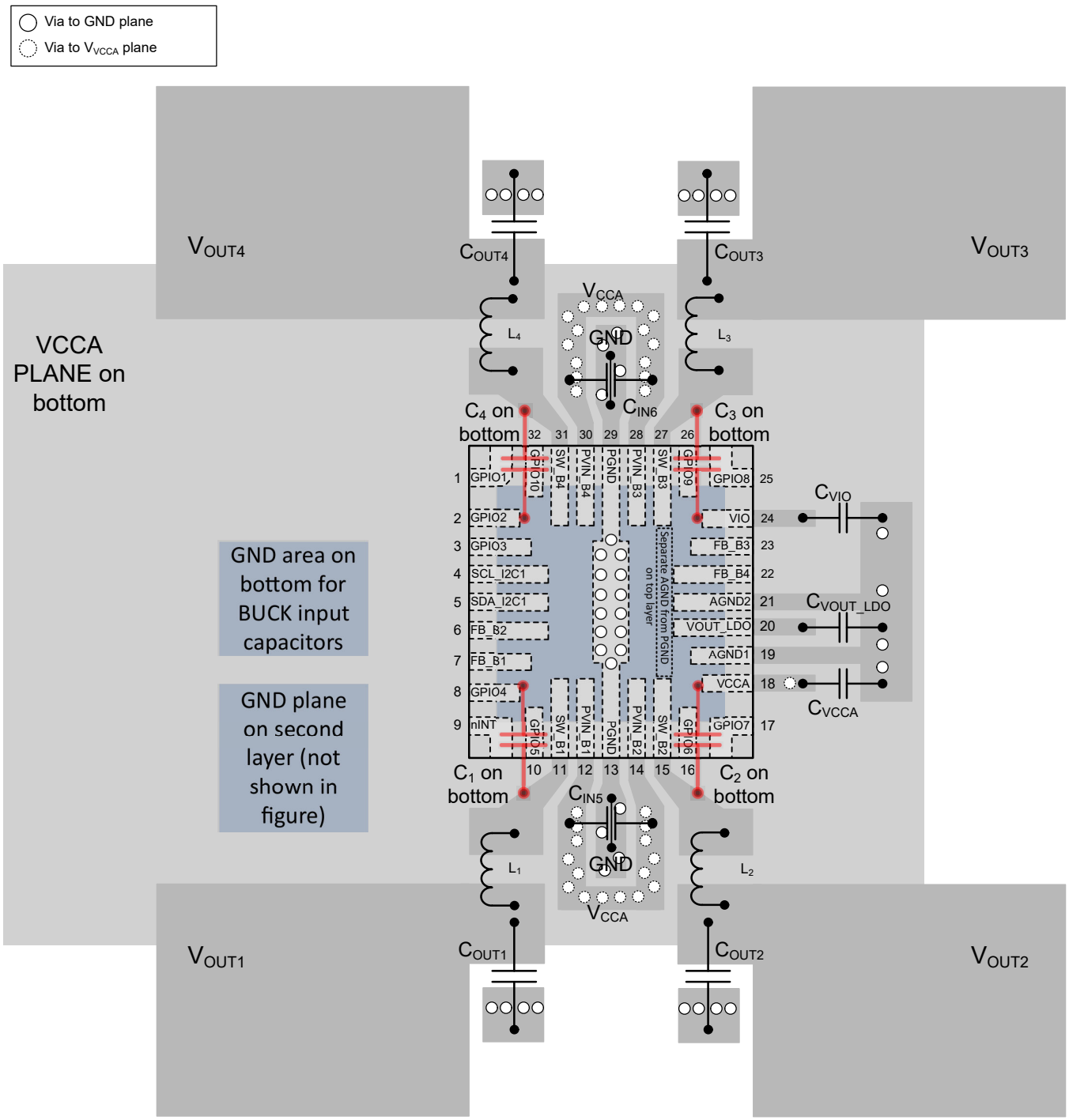

図 8-20. Device Board Layout

8.4 Power Supply Recommendations

The device is designed to operate from an input voltage supply range from 3.0 V and 5.5 V. This input supply must be well regulated and able to withstand maximum input current and maintain stable voltage without voltage drop even at load transition condition. The resistance of the input supply rail must be low enough that the input current transient does not cause too high drop in the device supply voltage that can cause false UVLO fault triggering. If the input supply is located more than a few inches from the additional bulk capacitance of the device may be required in addition to the ceramic bypass capacitors.

Copyright © 2022 Texas Instruments Incorporated

9 Device and Documentation Support

9.1 Receiving Notification of Documentation Updates

To receive notification of documentation updates, navigate to the device product folder on ti.com. Click on *Subscribe to updates* to register and receive a weekly digest of any product information that has changed. For change details, review the revision history included in any revised document.

9.2 サポート・リソース

TI E2E™ サポート・フォーラムは、エンジニアが検証済みの回答と設計に関するヒントをエキスパートから迅速かつ直接得ることができる場所です。既存の回答を検索したり、独自の質問をしたりすることで、設計で必要な支援を迅速に得ることができます。

リンクされているコンテンツは、該当する貢献者により、現状のまま提供されるものです。これらは TI の仕様を構成するものではなく、必ずしも TI の見解を反映したものではありません。TI の使用条件を参照してください。

9.3 Trademarks

TI E2E™ is a trademark of Texas Instruments.
すべての商標は、それぞれの所有者に帰属します。

9.4 Electrostatic Discharge Caution

This integrated circuit can be damaged by ESD. Texas Instruments recommends that all integrated circuits be handled with appropriate precautions. Failure to observe proper handling and installation procedures can cause damage.

ESD damage can range from subtle performance degradation to complete device failure. Precision integrated circuits may be more susceptible to damage because very small parametric changes could cause the device not to meet its published specifications.

9.5 Glossary

TI Glossary	This glossary lists and explains terms, acronyms, and definitions.

10 Mechanical, Packaging, and Orderable Information

The following pages include mechanical, packaging, and orderable information. This information is the most current data available for the designated devices. This data is subject to change without notice and revision of this document. For browser-based versions of this data sheet, refer to the left-hand navigation.

PACKAGING INFORMATION

Orderable part number	Status (1)	Material type (2)	Package | Pins	Package qty | Carrier	RoHS (3)	Lead finish/ Ball material (4)	MSL rating/ Peak reflow (5)	Op temp (°C)	Part marking (6)
LP876242B0RQKRQ1	Active	Production	VQFN-HR (RQK) | 32	3000 | LARGE T&R	Yes	SN	Level-2-260C-1 YEAR	-40 to 125	LP8762 42B0-Q1
LP876242B0RQKRQ1.A	Active	Production	VQFN-HR (RQK) | 32	3000 | LARGE T&R	Yes	SN	Level-2-260C-1 YEAR	-40 to 125	LP8762 42B0-Q1

(1) **Status:** For more details on status, see our product life cycle.

(2) **Material type:** When designated, preproduction parts are prototypes/experimental devices, and are not yet approved or released for full production. Testing and final process, including without limitation quality assurance, reliability performance testing, and/or process qualification, may not yet be complete, and this item is subject to further changes or possible discontinuation. If available for ordering, purchases will be subject to an additional waiver at checkout, and are intended for early internal evaluation purposes only. These items are sold without warranties of any kind.

(3) **RoHS values:** Yes, No, RoHS Exempt. See the TI RoHS Statement for additional information and value definition.

(4) **Lead finish/Ball material:** Parts may have multiple material finish options. Finish options are separated by a vertical ruled line. Lead finish/Ball material values may wrap to two lines if the finish value exceeds the maximum column width.

(5) **MSL rating/Peak reflow:** The moisture sensitivity level ratings and peak solder (reflow) temperatures. In the event that a part has multiple moisture sensitivity ratings, only the lowest level per JEDEC standards is shown. Refer to the shipping label for the actual reflow temperature that will be used to mount the part to the printed circuit board.

(6) **Part marking:** There may be an additional marking, which relates to the logo, the lot trace code information, or the environmental category of the part.

Multiple part markings will be inside parentheses. Only one part marking contained in parentheses and separated by a "~" will appear on a part. If a line is indented then it is a continuation of the previous line and the two combined represent the entire part marking for that device.

Important Information and Disclaimer: The information provided on this page represents TI's knowledge and belief as of the date that it is provided. TI bases its knowledge and belief on information provided by third parties, and makes no representation or warranty as to the accuracy of such information. Efforts are underway to better integrate information from third parties. TI has taken and continues to take reasonable steps to provide representative and accurate information but may not have conducted destructive testing or chemical analysis on incoming materials and chemicals. TI and TI suppliers consider certain information to be proprietary, and thus CAS numbers and other limited information may not be available for release.

In no event shall TI's liability arising out of such information exceed the total purchase price of the TI part(s) at issue in this document sold by TI to Customer on an annual basis.

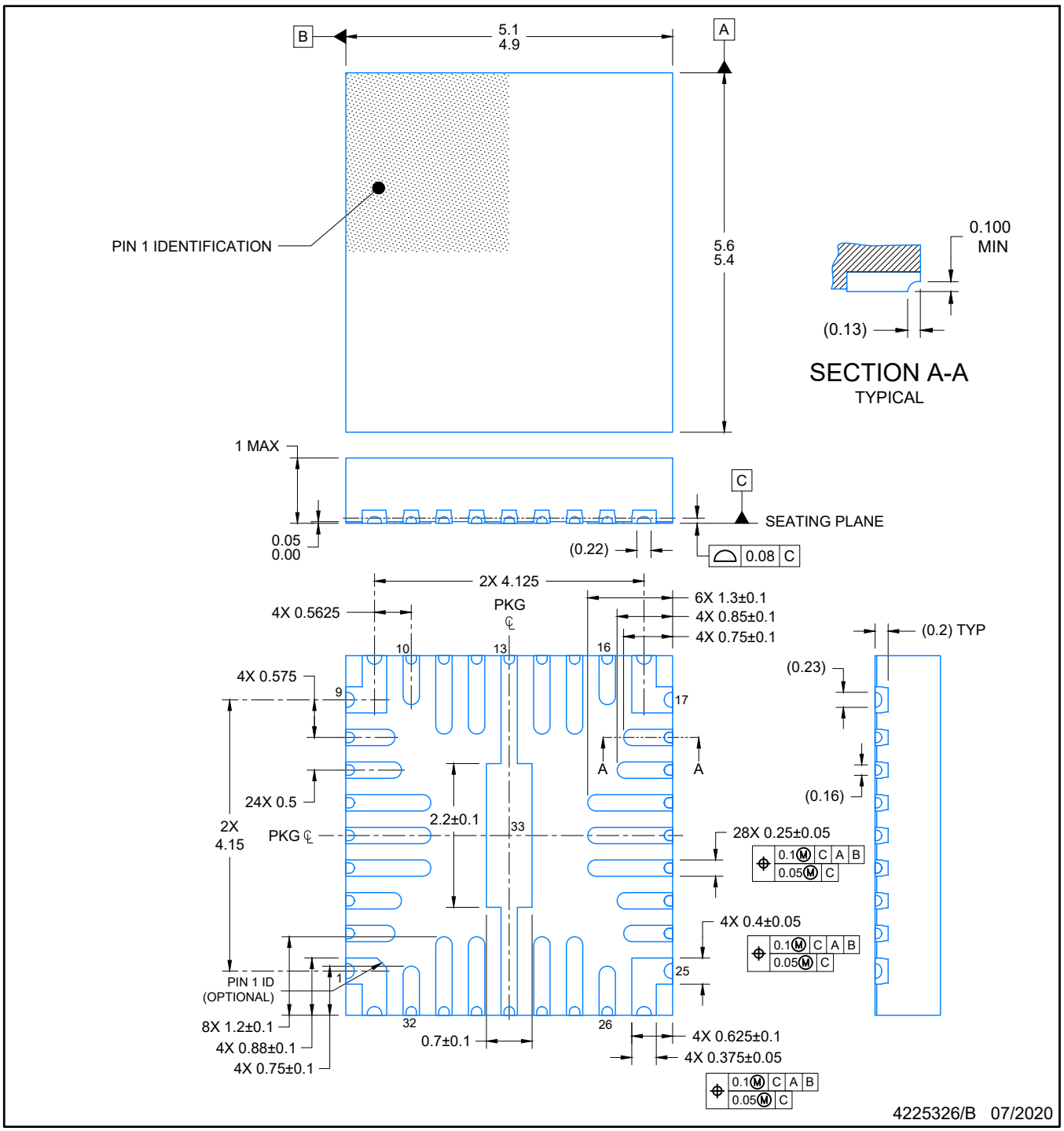

NOTES:

1. All linear dimensions are in millimeters. Any dimensions in parenthesis are for reference only. Dimensioning and tolerancing per ASME Y14.5M.
2. This drawing is subject to change without notice.

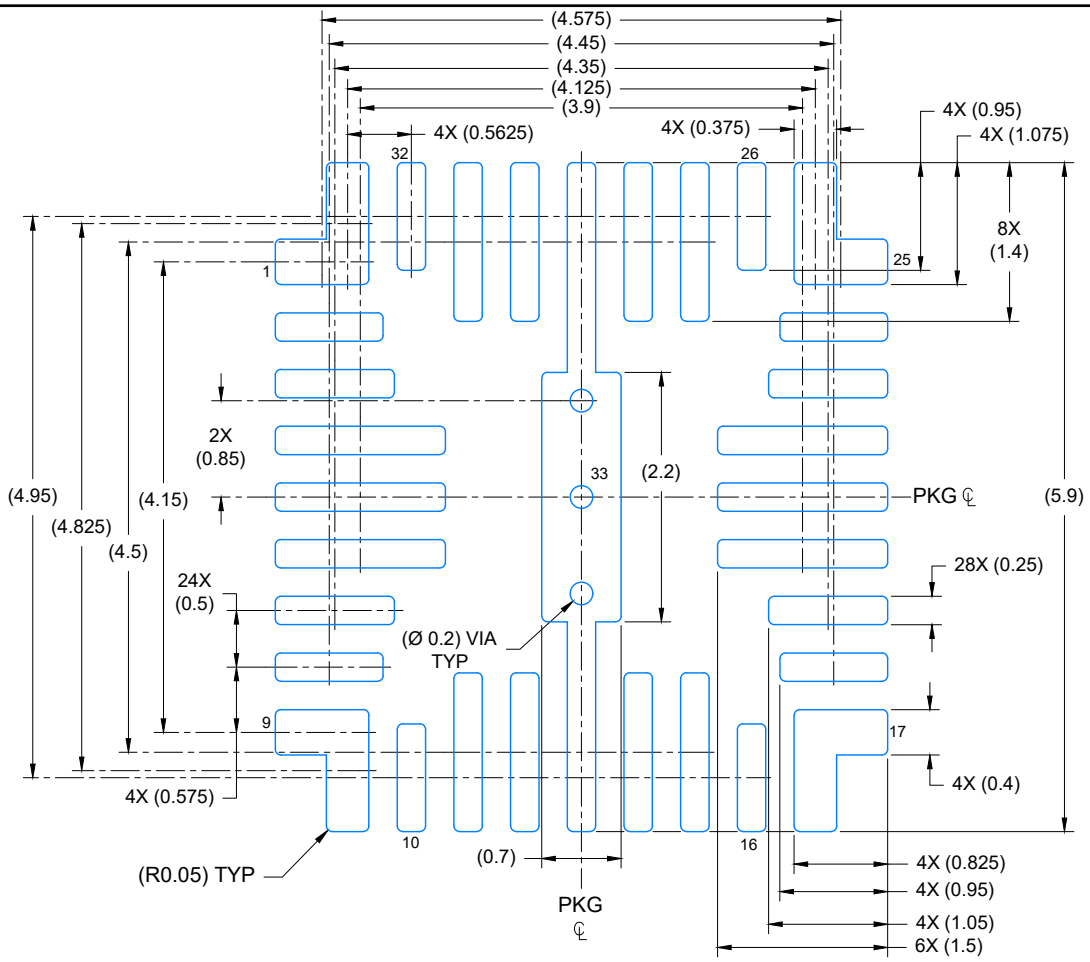

LAND PATTERN EXAMPLE
EXPOSED METAL SHOWN
SCALE: 15X

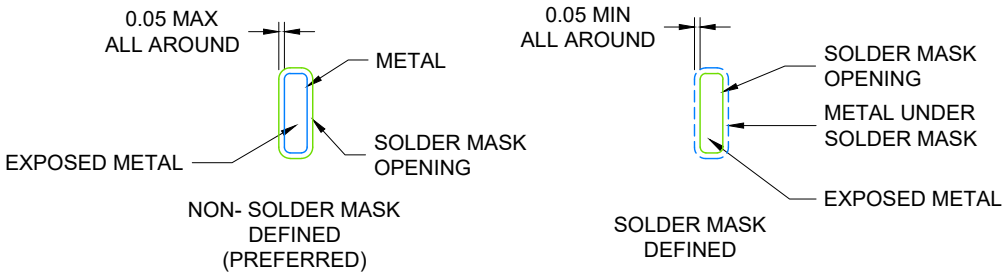

SOLDER MASK DETAILS
NOT TO SCALE

4225326/B 07/2020

NOTES: (continued)

3. For more information, see Texas Instruments literature number SLUA271 (www.ti.com/lit/slua271).
4. Solder mask tolerances between and around signal pads can vary based on board fabrication site.

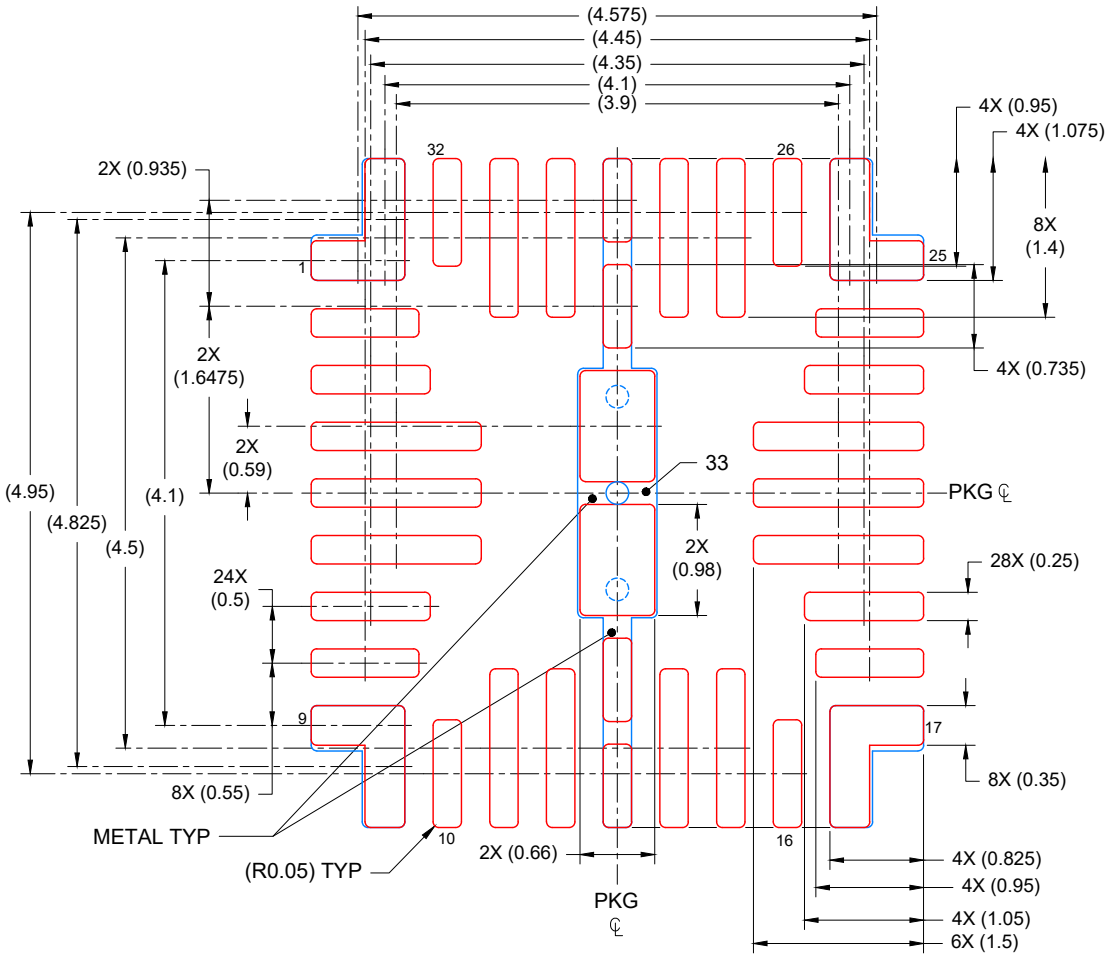

SOLDER PASTE EXAMPLE
BASED ON 0.1mm THICK STENCIL

PIN 1,9,16 & 25: 93%; PIN 13& 29: 79%; PIN 33: 84%
SCALE: 15X

4225326/B 07/2020

NOTES: (continued)

5. Laser cutting apertures with trapezoidal walls and rounded corners may offer better paste release. IPC-7525 may have alternate design recommendations.

重要なお知らせと免責事項

テキサス· インスツルメンツは、技術データと信頼性データ (データシートを含みます)、設計リソース (リファレンス デザインを含みます)、アプリケーションや設計に関する各種アドバイス、Web ツール、安全性情報、その他のリソースを、欠陥が存在する可能性のある「現状のまま」提供しており、商品性および特定目的に対する適合性の黙示保証、第三者の知的財産権の非侵害保証を含むいかなる保証も、明示的または黙示的にかかわらず拒否します。

これらのリソースは、 テキサス· インスツルメンツ製品を使用する設計の経験を積んだ開発者への提供を意図したものです。(1) お客様のアプリケーションに適した テキサス· インスツルメンツ製品の選定、(2) お客様のアプリケーションの設計、検証、試験、(3) お客様のアプリケーションに該当する各種規格や、その他のあらゆる安全性、セキュリティ、規制、または他の要件への確実な適合に関する責任を、お客様のみが単独で負うものとします。

上記の各種リソースは、予告なく変更される可能性があります。これらのリソースは、リソースで説明されている テキサス· インスツルメンツ製品を使用するアプリケーションの開発の目的でのみ、 テキサス· インスツルメンツはその使用をお客様に許諾します。これらのリソースに関して、他の目的で複製することや掲載することは禁止されています。 テキサス· インスツルメンツや第三者の知的財産権のライセンスが付与されている訳ではありません。お客様は、これらのリソースを自身で使用した結果発生するあらゆる申し立て、損害、費用、損失、責任について、 テキサス· インスツルメンツおよびその代理人を完全に補償するものとし、 テキサス· インスツルメンツは一切の責任を拒否します。

テキサス· インスツルメンツの製品は、 テキサス· インスツルメンツの販売条件、または ti.com やかかる テキサス· インスツルメンツ製品の関連資料などのいずれかを通じて提供する適用可能な条項の下で提供されています。 テキサス· インスツルメンツがこれらのリソースを提供することは、適用される テキサス· インスツルメンツの保証または他の保証の放棄の拡大や変更を意味するものではありません。

お客様がいかなる追加条項または代替条項を提案した場合でも、 テキサス· インスツルメンツはそれらに異議を唱え、拒否します。

郵送先住所：Texas Instruments, Post Office Box 655303, Dallas, Texas 75265
Copyright © 2025, Texas Instruments Incorporated