LP5907-Q1 車載用250mA、超低ノイズ、低I_Q LDO

1 特長

- 車載アプリケーションに対応
- 下記内容でAEC-Q100認定済み:
  - デバイス温度グレード 1: 動作時周囲温度範囲 –40℃～125°C
  - デバイスHBM ESD分類レベル2
  - デバイスCDM ESD分類レベルC6
- 入力電圧範囲: 2.2V～5.5V
- 出力電圧範囲: 1.2V～4.5V
- 1µFのセラミック入力/出力コンデンサで安定動作
- ノイズ・バイパス・コンデンサが不要
- 出力コンデンサのリモート配置
- 過熱および短絡保護
- 出力電流: 250mA
- 低い出力電圧ノイズ: 6.5µV_{RMS}未満
- PSRR: 82dB (1kHz時)
- 出力電圧公差: ±2%
- ほぼゼロのI_Q (ディセーブル時): 1µA未満
- 超低I_Q (イネーブル時): 12µA
- スタートアップ時間: 80µs
- 低いドロップアウト: 120mV (標準値)
- 動作時接合部温度範囲: -40℃～125℃

2 アプリケーション

- 車載インフォテインメント
- テレマティクス・システム
- ADASのカメラとレーダー
- ナビゲーション・システム

3 概要

LP5907-Q1は低ノイズLDOで、250mAの出力電流を供給できます。RF/アナログ回路の要件を満たすよう設計されたLP5907-Q1は、低ノイズ、高PSRR、低静止電流、低ライン/負荷過渡応答といった特徴を備えています。新しい革新的な設計手法の採用により、ノイズ・バイパス用コンデンサなしでクラス最高レベルの優れたノイズ特性を実現し、出力コンデンサのリモート配置にも対応します。

このデバイスは、入力および出力に1µFのセラミック・コンデンサを使用して動作するよう設計されています(個別にノイズ・バイパス・コンデンサを用意する必要はありません)。

このデバイスでは、1.2V～4.5V (25mVステップ)の固定出力電圧を使用できます。具体的な電圧オプションについては、テキサス・インスツルメンツの販売部門までお問い合わせください。

製品情報(1)

型番	パッケージ	本体サイズ(公称)
LP5907-Q1	SOT-23 (5)	2.90mm×1.60mm

(1) 利用可能なすべてのパッケージについては、このデータシートの末尾にある注文情報を参照してください。

概略回路図

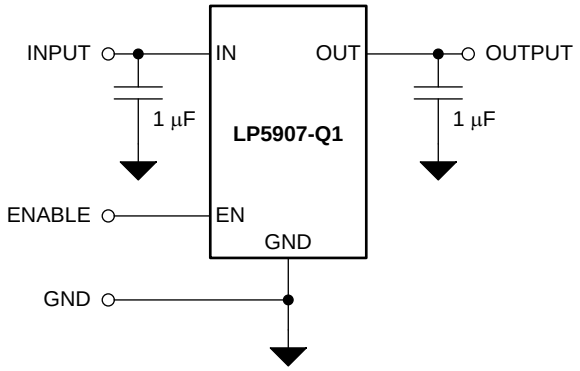

英語版のTI製品についての情報を翻訳したこの資料は、製品の概要を確認する目的で便宜的に提供しているものです。該当する正式な英語版の最新情報は、www.ti.comで閲覧でき、その内容が常に優先されます。TIでは翻訳の正確性および妥当性につきましては一切保証いたしません。実際の設計などの前には、必ず最新版の英語版をご参照くださいますようお願いいたします。

目次

1 特長 ... 1
2 アプリケーション ... 1
3 概要 ... 1
4 改訂履歴 ... 2
5 **Pin Configuration and Functions** ... 3
6 **Specifications** ... 4
6.1 Absolute Maximum Ratings ... 4
6.2 ESD Ratings ... 4
6.3 Recommended Operating Conditions ... 4
6.4 Thermal Information ... 4
6.5 Electrical Characteristics ... 5
6.6 Output and Input Capacitors ... 6
6.7 Typical Characteristics ... 7
7 **Detailed Description** ... 11
7.1 Overview ... 11
7.2 Functional Block Diagram ... 11
7.3 Feature Description ... 12
7.4 Device Functional Modes ... 13
8 **Application and Implementation** ... 14
8.1 Application Information ... 14
8.2 Typical Application ... 14
9 **Power Supply Recommendations** ... 17
10 **Layout** ... 17
10.1 Layout Guidelines ... 17
10.2 Layout Example ... 17
11 デバイスおよびドキュメントのサポート ... 18
11.1 ドキュメントの更新通知を受け取る方法 ... 18
11.2 コミュニティ・リソース ... 18
11.3 商標 ... 18
11.4 静電気放電に関する注意事項 ... 18
11.5 Glossary ... 18
12 メカニカル、パッケージ、および注文情報 ... 18

4 改訂履歴

資料番号末尾の英字は改訂を表しています。その改訂履歴は英語版に準じています。

Revision B (September 2016) から Revision C に変更 — **Page**

- 「特長」セクションにESD分類レベルの箇条書き副項目を 追加 ... 1
- Changed DBV values in *Thermal Information* table ... 4
- Deleted footnote 1 from *Thermal Information* table ... 4
- Added *Overshoot on start-up with EN* row to *Electrical Characteristics* table ... 6
- Changed *Device Comparison* table: changed table title, added new rows and new data, moved to new sub-section ... 12

Revision A (June 2016) から Revision B に変更 — **Page**

- タイトルの表現 変更 ... 1
- 「低い出力電圧ノイズ: 10μV_{RMS}未満」を「低い出力電圧ノイズ: 6.5μV_{RMS}未満」に 変更 ... 1
- 「アプリケーション」の一覧の項目 変更 ... 1
- 「概要」の最初の文について表現を 変更 ... 1

2014年9月発行のものから更新 — **Page**

- 「特長」に車載関連の箇条書き項目を 追加 ... 1
- TI Designs用の上端のナビゲーション・アイコン 追加 ... 1
- 「リニア・レギュレータ」を「LDO」に 変更 ... 1
- Changed storage temperature from *Handling Ratings* to *Abs Max* table; replaced *Handling Ratings* with *ESD Ratings* per new format ... 4

Copyright © 2014–2018, Texas Instruments Incorporated

5 Pin Configuration and Functions

DBV Package
5-Pin SOT-23
(Top View)

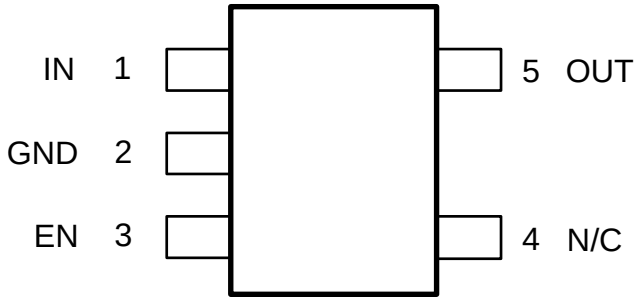

Pin Functions

PIN		I/O	DESCRIPTION
NAME	SOT23-5		
IN	1	I	Input voltage supply. Connect a 1-µF capacitor at this input.
GND	2	–	Common ground
EN	3	I	Enable input. A low voltage (< V_{IL}) on this pin turns the regulator off and discharges the output pin to GND through an internal 230-Ω pulldown resistor. A high voltage (> V_{IH}) on this pin enables the regulator output. This pin has an internal 1-MΩ pulldown resistor to hold the regulator off by default.
N/C	4	–	No internal electrical connection.
OUT	5	O	Regulated output voltage. Connect a minimum 1-µF low-ESR capacitor to this pin. Connect this output to the load circuit. An internal 230-Ω (typical) pulldown resistor prevents a charge remaining on V_{OUT} when the regulator is in the shutdown mode (V_{EN} low).

Copyright © 2014–2018, Texas Instruments Incorporated

6 Specifications

6.1 Absolute Maximum Ratings

over operating free-air temperature range (unless otherwise noted)[1][2]

		MIN	MAX	UNIT
V_{IN}	Input voltage	–0.3	6	V
V_{OUT}	Output voltage	–0.3	See [3]	V
V_{EN}	Enable input voltage	–0.3	6	V
	Continuous power dissipation[4]	Internally limited		W
T_{JMAX}	Junction temperature		150	°C
T_{stg}	Storage temperature	–65	150	°C

(1) Stresses beyond those listed under *Absolute Maximum Ratings* may cause permanent damage to the device. These are stress ratings only, and functional operation of the device at these or any other conditions beyond those indicated under *Recommended Operating Conditions* is not implied. Exposure to absolute-maximum-rated conditions for extended periods may affect device reliability.
(2) All voltages are with respect to the GND pin.
(3) Abs Max V_{OUT} is the lessor of V_{IN} + 0.3 V, or 6 V.
(4) Internal thermal shutdown circuitry protects the device from permanent damage.

6.2 ESD Ratings

				VALUE	UNIT
$V_{(ESD)}$	Electrostatic discharge	Human-body model (HBM), per AEC Q100-002[1]	All pins	±2000	V
		Charged-device model (CDM), per AEC Q100-011	Corner pins (1,3,4,5)	±1000	
			Other pin (2)	±1000	

(1) AEC Q100-002 indicates that HBM stressing shall be in accordance with the ANSI/ESDA/JEDEC JS-001 specification.

6.3 Recommended Operating Conditions

over operating free-air temperature range (unless otherwise noted)[1][2]

		MIN	MAX	UNIT
V_{IN}	Input supply voltage	2.2	5.5	V
V_{EN}	Enable input voltage	0	5.5	V
I_{OUT}	Output current	0	250	mA
$T_{J\text{-}MAX\text{-}OP}$	Operating junction temperature[3]	–40	125	°C

(1) Stresses beyond those listed under *Absolute Maximum Ratings* may cause permanent damage to the device. These are stress ratings only, and functional operation of the device at these or any other conditions beyond those indicated under *Recommended Operating Conditions* is not implied. Exposure to absolute-maximum-rated conditions for extended periods may affect device reliability.
(2) All voltages are with respect to the GND pin.
(3) $T_{J\text{-}MAX\text{-}OP} = [T_{A(MAX)} + (P_{D(MAX)} \times R_{\theta JA})]$.

6.4 Thermal Information

THERMAL METRIC[1]		LP5907-Q1 DBV (SOT-23) 5 PINS	UNIT
$R_{\theta JA}$	Junction-to-ambient thermal resistance	186.9	°C/W
$R_{\theta JC(top)}$	Junction-to-case (top) thermal resistance	112.3	°C/W
$R_{\theta JB}$	Junction-to-board thermal resistance	52.3	°C/W
ψ_{JT}	Junction-to-top characterization parameter	27.5	°C/W
ψ_{JB}	Junction-to-board characterization parameter	51.8	°C/W

(1) For more information about traditional and new thermal metrics, see the *Semiconductor and IC Package Thermal Metrics* application report.

Copyright © 2014–2018, Texas Instruments Incorporated

6.5 Electrical Characteristics

$V_{IN} = V_{OUT(NOM)} + 1$ V, $V_{EN} = 1.2$ V, $I_{OUT} = 1$ mA, $C_{IN} = 1$ µF, $C_{OUT} = 1$ µF (unless otherwise noted)(1)(2)(3)

PARAMETER		TEST CONDITIONS		MIN	TYP	MAX	UNIT
GENERAL							
V_{IN}	Input voltage	$T_A = 25°C$		2.2		5.5	V
ΔV_{OUT}	Output voltage tolerance	$V_{IN} = (V_{OUT(NOM)} + 1$ V) to 5.5 V, $I_{OUT} = 1$ mA to 250 mA, $V_{OUT} \geq 1.8$ V		–2		2	$\%V_{OUT}$
		$V_{IN} = (V_{OUT(NOM)} + 1$ V) to 5.5 V, $I_{OUT} = 1$ mA to 250 mA, $V_{OUT} < 1.8$ V		–3		3	
	Line regulation	$V_{IN} = (V_{OUT(NOM)} + 1$ V) to 5.5 V, $I_{OUT} = 1$ mA			0.02		%/V
	Load regulation	$I_{OUT} = 1$ mA to 250 mA			0.001		%/mA
I_{LOAD}	Output load current			0		250	mA
I_Q	Quiescent current(4)	$V_{EN} = 1.2$ V, $I_{OUT} = 0$ mA			12	25	µA
		$V_{EN} = 1.2$ V, $I_{OUT} = 250$ mA			250	425	
		$V_{EN} = 0.3$ V (Disabled)			0.2	1	
I_G	Ground current(5)	$V_{EN} = 1.2$ V, $I_{OUT} = 0$ mA			14		µA
V_{DO}	Dropout voltage(6)	$I_{OUT} = 100$ mA			50		mV
		$I_{OUT} = 250$ mA				250	
I_{SC}	Short-circuit current limit	$T_A = 25°C$(7)		250	500		mA
PSRR	Power-supply rejection ratio(8)	f = 100 Hz, $I_{OUT} = 20$ mA			90		dB
		f = 1 kHz, $I_{OUT} = 20$ mA			82		
		f = 10 kHz, $I_{OUT} = 20$ mA			65		
		f = 100 kHz, $I_{OUT} = 20$ mA			60		
e_N	Output noise voltage(8)	BW = 10 Hz to 100 kHz	$I_{OUT} = 1$ mA		10		μV_{RMS}
			$I_{OUT} = 250$ mA		6.5		
R_{AD}	Output automatic discharge pulldown resistance	$V_{EN} < V_{IL}$ (output disabled)			230		Ω
T_{SD}	Thermal shutdown	T_J rising			160		°C
	Thermal hysteresis	T_J falling from shutdown			15		
LOGIC INPUT THRESHOLDS							
V_{IL}	Low input threshold	$V_{IN} = 2.2$ V to 5.5 V, V_{EN} falling until the output is disabled				0.4	V
V_{IH}	High input threshold	$V_{IN} = 2.2$ V to 5.5 V, V_{EN} rising until the output is enabled		1.2			V
I_{EN}	Input current at EN pin(9)	$V_{EN} = 5.5$ V and $V_{IN} = 5.5$ V			5.5		µA
		$V_{EN} = 0$ V and $V_{IN} = 5.5$ V			0.001		

(1) All voltages are with respect to the device GND terminal, unless otherwise stated.
(2) Minimum and maximum limits are ensured through test, design, or statistical correlation over the junction temperature (T_J) range of –40°C to 125°C, unless otherwise stated. Typical values represent the most likely parametric norm at $T_A = 25°C$, and are provided for reference purposes only.
(3) In applications where high power dissipation and/or poor package thermal resistance is present, the maximum ambient temperature may have to be derated. Maximum ambient temperature ($T_{A\text{-}MAX}$) is dependent on the maximum operating junction temperature ($T_{J\text{-}MAX\text{-}OP}$ = 125°C), the maximum power dissipation of the device in the application ($P_{D\text{-}MAX}$), and the junction-to ambient thermal resistance of the part/package in the application $R_{\theta JA}$), as given by the following equation: $T_{A\text{-}MAX} = T_{J\text{-}MAX\text{-}OP} - (R_{\theta JA} \times P_{D\text{-}MAX})$. See *Application and Implementation*.
(4) Quiescent current is defined here as the difference in current between the input voltage source and the load at V_{OUT}.
(5) Ground current is defined here as the total current flowing to ground as a result of all input voltages applied to the device.
(6) Dropout voltage is the voltage difference between the input and the output at which the output voltage drops to 100 mV below its nominal value.
(7) Short-circuit current (I_{SC}) for the LP5907-Q1 is equivalent to current limit. To minimize thermal effects during testing, I_{SC} is measured with V_{OUT} pulled to 100 mV below its nominal voltage.
(8) This specification is verified by design.
(9) There is a 1-MΩ resistor between EN and ground on the device.

Copyright © 2014–2018, Texas Instruments Incorporated

Electrical Characteristics (continued)

$V_{IN} = V_{OUT(NOM)} + 1$ V, $V_{EN} = 1.2$ V, $I_{OUT} = 1$ mA, $C_{IN} = 1$ µF, $C_{OUT} = 1$ µF (unless otherwise noted)[(1)(2)(3)]

PARAMETER		TEST CONDITIONS	MIN	TYP	MAX	UNIT
TRANSIENT CHARACTERISTICS						
ΔV_{OUT}	Line transient[(8)]	$V_{IN} = (V_{OUT(NOM)} + 1$ V) to ($V_{OUT(NOM)} + 1.6$ V) in 30 µs	–1			mV
		$V_{IN} = (V_{OUT(NOM)} + 1.6$ V) to ($V_{OUT(NOM)} + 1.6$ V) in 30 µs			1	
	Load transient[(8)]	I_{OUT} = 1 mA to 250 mA in 10 µs	–40			
		I_{OUT} = 250 mA to 1 mA in 10 µs			40	
	Overshoot on start-up[(8)]	Stated as a percentage of $V_{OUT(NOM)}$			5%	
	Overshoot on start-up with EN[(8)]	Stated as a percentage of $V_{OUT(NOM)}$, $V_{IN} = V_{OUT} + 1$ V to 5.5 V, 0.7 µF < C_{OUT} < 10 µF, 0 mA < I_{OUT} < 250 mA, EN rising until the output is enabled			1%	
t_{ON}	Turnon time	From $V_{EN} > V_{IH}$ to V_{OUT} = 95% of $V_{OUT(NOM)}$, T_A = 25°C		80	150	µs

6.6 Output and Input Capacitors

over operating free-air temperature range (unless otherwise noted)

PARAMETER		TEST CONDITIONS	MIN[(1)]	TYP	MAX	UNIT
C_{IN}	Input capacitance[(2)]	Capacitance for stability	0.7	1		µF
C_{OUT}	Output capacitance[(2)]		0.7	1	10	
ESR	Output/input capacitance[(2)]		5		500	mΩ

(1) The minimum capacitance should be greater than 0.5 µF over the full range of operating conditions. The capacitor tolerance should be 30% or better over the full temperature range. The full range of operating conditions for the capacitor in the application should be considered during device selection to ensure this minimum capacitance specification is met. X7R capacitors are recommended however capacitor types X5R, Y5V and Z5U may be used with consideration of the application and conditions.
(2) This specification is verified by design.

Copyright © 2014–2018, Texas Instruments Incorporated

6.7 Typical Characteristics

V_{IN} = 3.7 V, V_{OUT} = 2.8 V, I_{OUT} = 1 mA, C_{IN} = 1 µF, C_{OUT} = 1 µF, T_A = 25°C (unless otherwise noted)

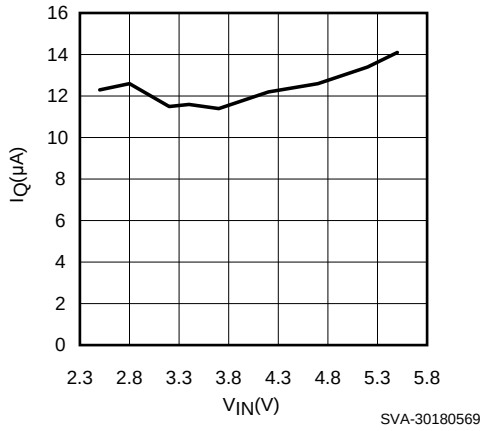

Figure 1. Quiescent Current vs Input Voltage

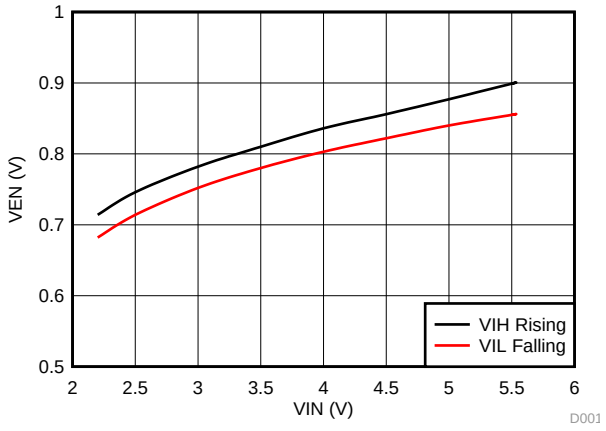

Figure 2. V_{EN} Thresholds vs V_{IN}

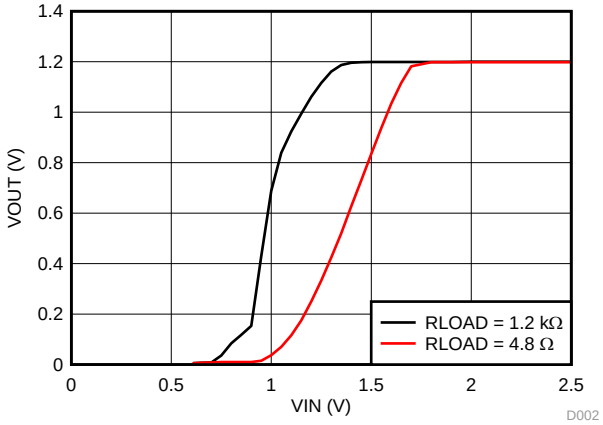

V_{OUT} = 1.2 V, V_{EN} = V_{IN}

Figure 3. V_{OUT} vs V_{IN}

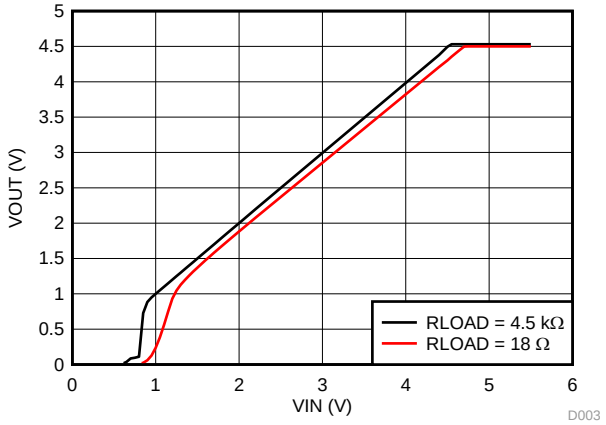

V_{OUT} = 4.5 V, V_{EN} = V_{IN}

Figure 4. V_{OUT} vs V_{IN}

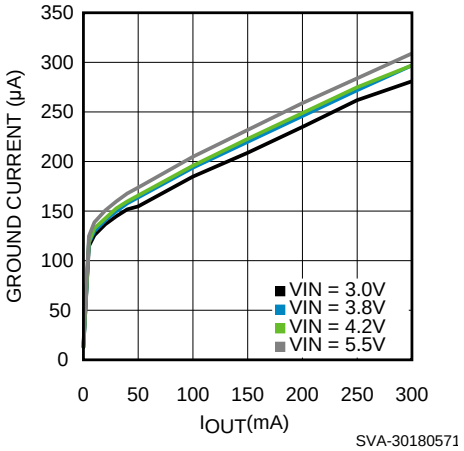

Figure 5. Ground Current vs Output Current

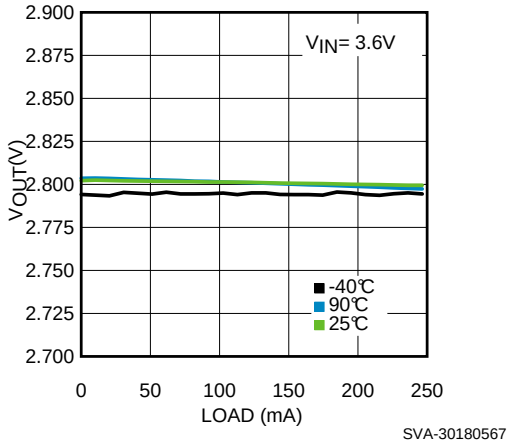

Figure 6. Load Regulation

Typical Characteristics (continued)

V_{IN} = 3.7 V, V_{OUT} = 2.8 V, I_{OUT} = 1 mA, C_{IN} = 1 µF, C_{OUT} = 1 µF, T_A = 25°C (unless otherwise noted)

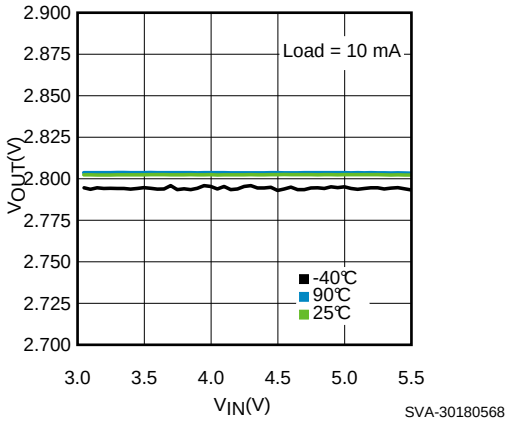

Figure 7. Line Regulation

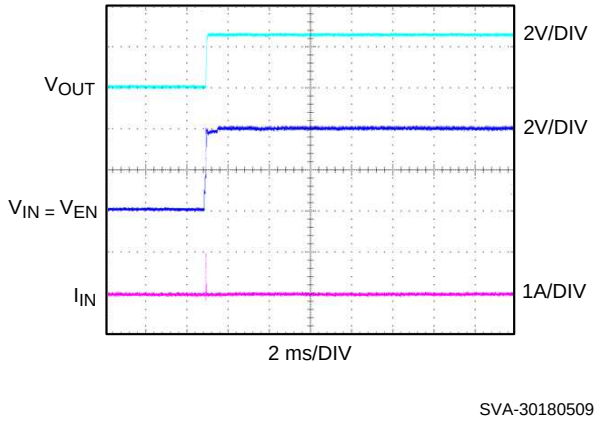

Figure 8. Inrush Current

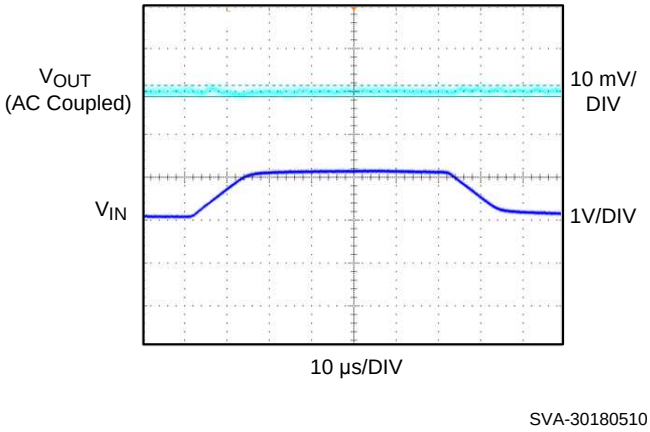

V_{IN} = 3.2 V ↔ 4.2 V, load = 1 mA

Figure 9. Line Transient

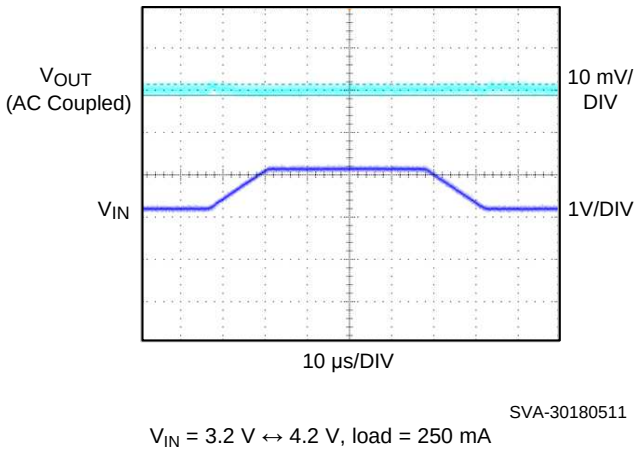

V_{IN} = 3.2 V ↔ 4.2 V, load = 250 mA

Figure 10. Line Transient

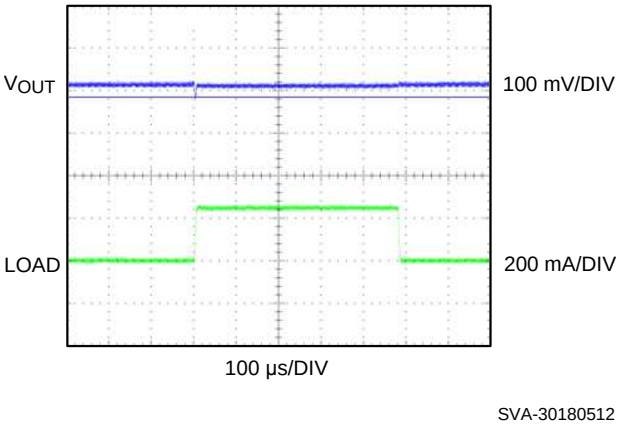

Load = 0 mA ↔ 250 mA, –40°C

Figure 11. Load Transient

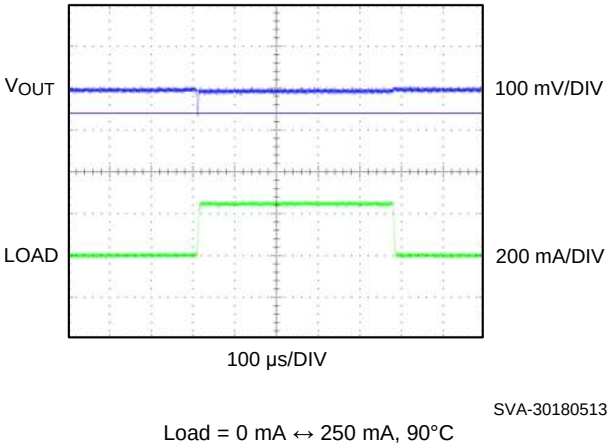

Load = 0 mA ↔ 250 mA, 90°C

Figure 12. Load Transient

Copyright © 2014–2018, Texas Instruments Incorporated

Typical Characteristics (continued)

V_{IN} = 3.7 V, V_{OUT} = 2.8 V, I_{OUT} = 1 mA, C_{IN} = 1 µF, C_{OUT} = 1 µF, T_A = 25°C (unless otherwise noted)

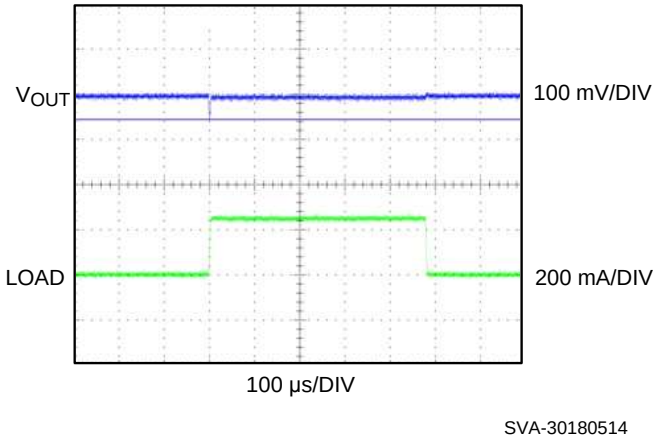

Load = 0 mA ↔ 250 mA, 25°C

Figure 13. Load Transient

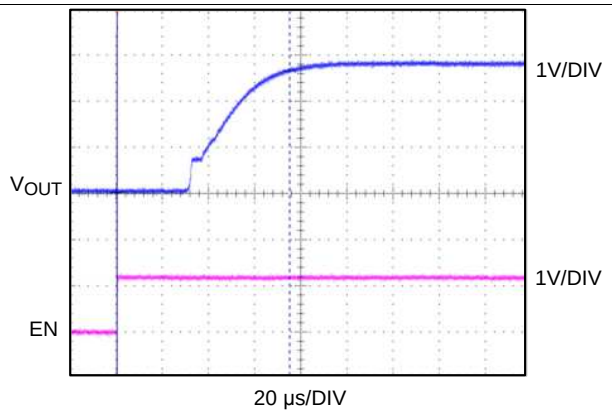

0 mA

Figure 14. Start-Up

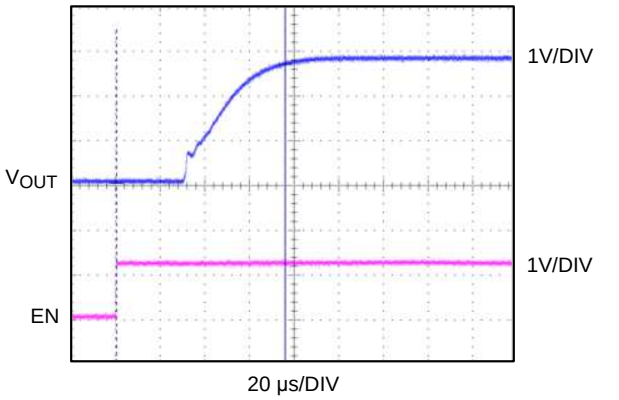

250 mA

Figure 15. Start-Up

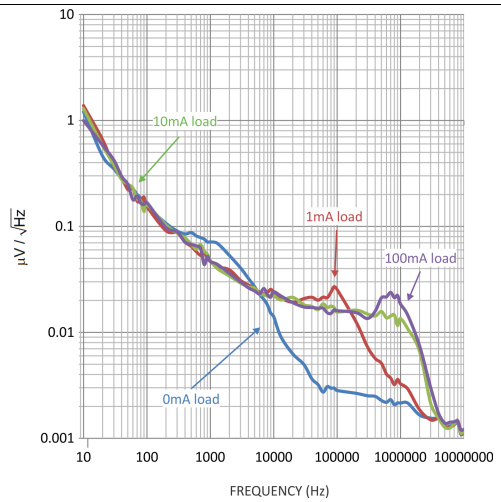

Figure 16. Noise Density Test

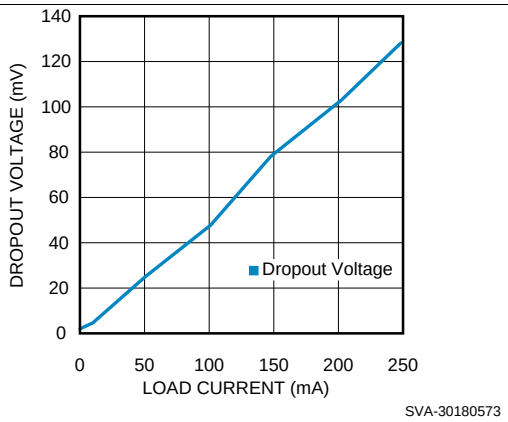

Figure 17. Dropout Voltage vs Load Current

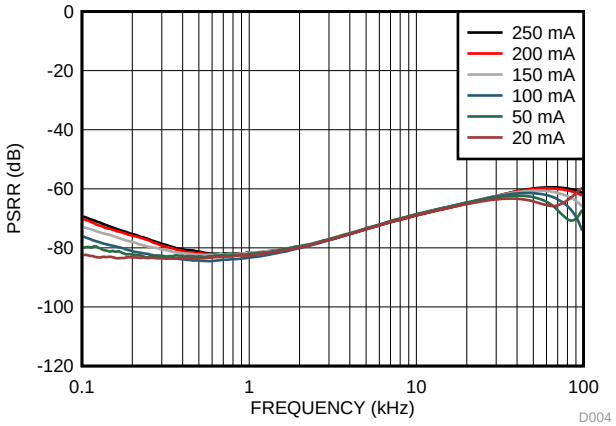

Figure 18. PSRR Loads Averaged 100 Hz To 100 KHz

Typical Characteristics (continued)

V_{IN} = 3.7 V, V_{OUT} = 2.8 V, I_{OUT} = 1 mA, C_{IN} = 1 µF, C_{OUT} = 1 µF, T_A = 25°C (unless otherwise noted)

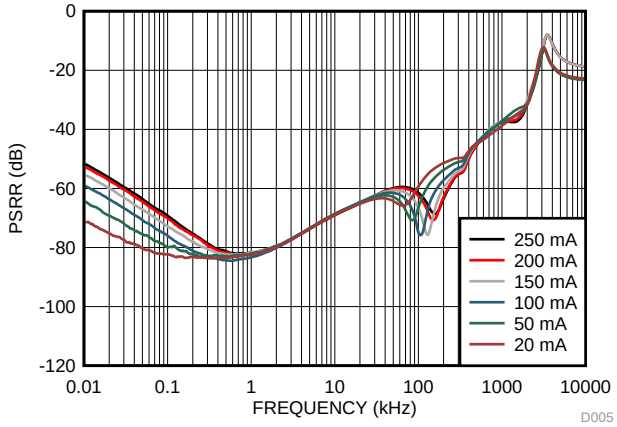

Figure 19. PSRR Loads Averaged 10 Hz To 10 MHz

Copyright © 2014–2018, Texas Instruments Incorporated

7 Detailed Description

7.1 Overview

Designed to meet the needs of sensitive RF and analog circuits, the LP5907-Q1 provides low noise, high PSRR, low quiescent current, as well as low line and load transient response figures. Using new innovative design techniques, the LP5907-Q1 offers class leading noise performance without the need for a separate noise filter capacitor.

The LP5907-Q1 is designed to perform with a single 1-µF input capacitor and a single 1-µF ceramic output capacitor. With a reasonable PCB layout, the single 1-µF ceramic output capacitor can be placed up to 10 cm away from the LP5907-Q1 package.

7.2 Functional Block Diagram

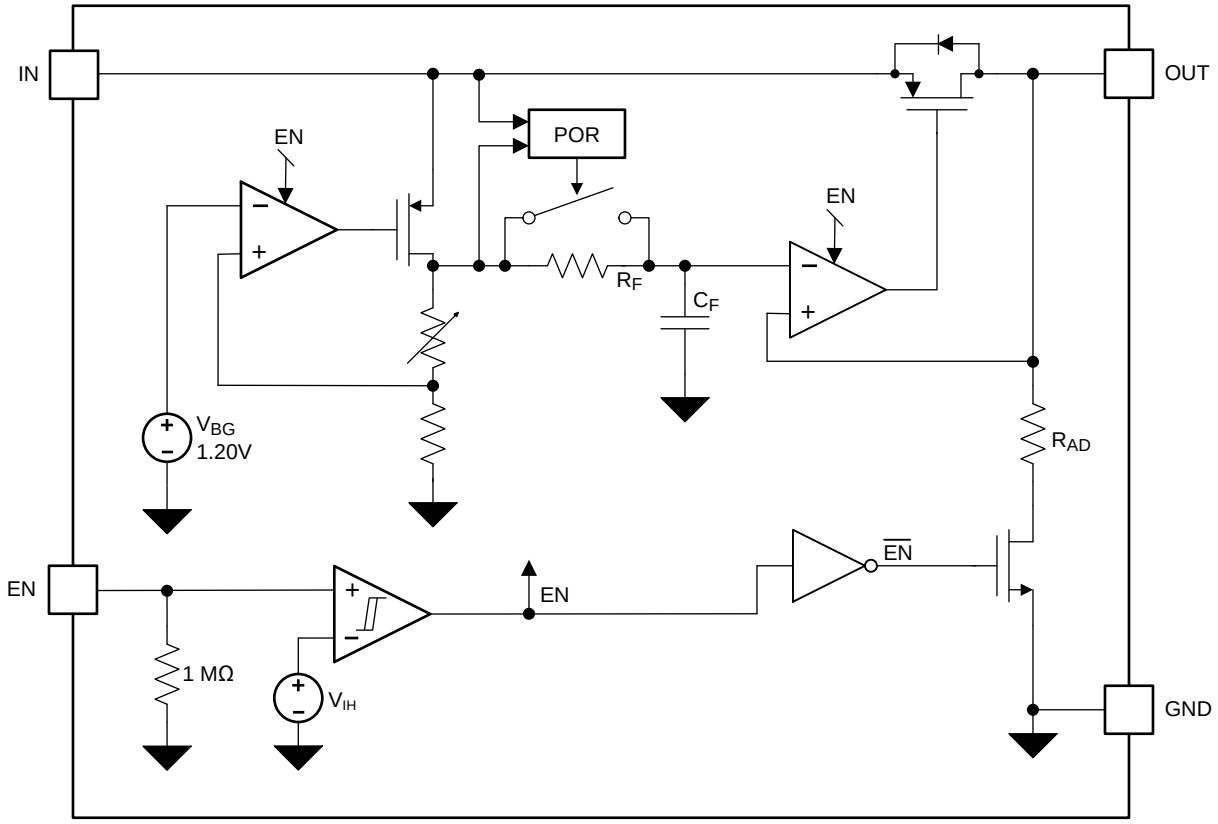

Copyright © 2016, Texas Instruments Incorporated

7.3 Feature Description

7.3.1 LP5907-Q1 Voltage Options

Table 1 lists the available voltage options for the LP5907-Q1 SOT-23 package.

Table 1. Voltage Options

SOT-23 PACKAGE ORDER NUMBER	VOLTAGE OPTION (V)
LP5907QMFX-1.2Q1	1.2
—	1.3
—	1.5
LP5907QMFX-1.8Q1	1.8
LP5907QMFX-2.5Q1	2.5
LP5907QMFX-2.8Q1	2.8
	2.85
	2.9
LP5907QMFX-3.0Q1	3.0
LP5907QMFX-3.3Q1	3.3
LP5907QMFX-3.8Q1	3.8
LP5907QMFX-4.5Q1	4.5

7.3.2 Enable (EN)

The LP5907-Q1 EN pin is internally held low by a 1-MΩ resistor to GND. The EN pin voltage must be higher than the V_{IH} threshold to ensure that the device is fully enabled under all operating conditions. The EN pin voltage must be lower than the V_{IL} threshold to ensure that the device is fully disabled and the automatic output discharge is activated.

7.3.3 Low Output Noise

Any internal noise at the LP5907-Q1 reference voltage is reduced by a first order low-pass RC filter before it is passed to the output buffer stage. The low-pass RC filter has a –3 dB cut-off frequency of approximately 0.1 Hz.

7.3.4 Output Automatic Discharge

The LP5907-Q1 output employs an internal 230-Ω (typical) pulldown resistance to discharge the output when the EN pin is low, and the device is disabled.

7.3.5 Remote Output Capacitor Placement

The LP5907-Q1 requires at least a 1-µF capacitor at the OUT pin, but there are no strict requirements about the location of the capacitor in regards the OUT pin. In practical designs, the output capacitor may be located up to 10 cm away from the LDO.

7.3.6 Thermal Overload Protection (T_{SD})

Thermal shutdown disables the output when the junction temperature rises to approximately 160°C which allows the device to cool. When the junction temperature cools to approximately 145°C, the output circuitry enables. Based on power dissipation, thermal resistance, and ambient temperature, the thermal protection circuit may cycle on and off. This thermal cycling limits the dissipation of the regulator and protects it from damage as a result of overheating.

The thermal shutdown circuitry of the LP5907-Q1 has been designed to protect against temporary thermal overload conditions. The thermal shutdown circuitry was not intended to replace proper heat-sinking. Continuously running the LP5907-Q1 device into thermal shutdown may degrade device reliability.

Copyright © 2014–2018, Texas Instruments Incorporated

7.4 Device Functional Modes

7.4.1 Enable (EN)

The LP5907-Q1 Enable (EN) pin is internally held low by a 1-MΩ resistor to GND. The EN pin voltage must be higher than the V_{IH} threshold to ensure that the device is fully enabled under all operating conditions.

When the EN pin is pulled low, and the output is disabled, the output automatic discharge circuitry is activated. Any charge on the OUT pin is discharged to GND through the internal 230-Ω (typical) pull-down resistance.

7.4.2 Minimum Operating Input Voltage (V_{IN})

The LP5907-Q1 does not include any dedicated undervoltage lockout circuitry. The LP5907-Q1 internal circuitry is not fully functional until V_{IN} is at least 2.2 V. The output voltage is not regulated until V_{IN} has reached at least the greater of 2.2 V or (V_{OUT} + V_{DO}).

Copyright © 2014–2018, Texas Instruments Incorporated

8 Application and Implementation

NOTE

Information in the following applications sections is not part of the TI component specification, and TI does not warrant its accuracy or completeness. TI's customers are responsible for determining suitability of components for their purposes. Customers should validate and test their design implementation to confirm system functionality.

8.1 Application Information

Figure 20 shows the typical application circuit for the LP5907-Q1. Input and output capacitances may need to be increased above the 1 µF minimum for some applications.

8.2 Typical Application

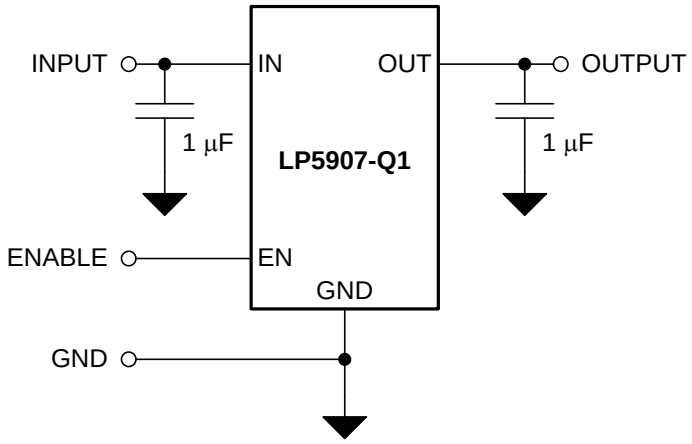

Figure 20. LP5907-Q1 Typical Application

8.2.1 Design Requirements

DESIGN PARAMETER	EXAMPLE VALUE
Input voltage range	2.2 to 5.5 V
Output voltage	1.8 V
Output current	200 mA
Output capacitor range	0.7 to 10 µF
Input/output capacitor ESR range	5 to 500 mΩ

8.2.2 Detailed Design Procedure

To begin the design process, determine the following:

- Available input voltage range
- Output voltage needed
- Output current needed
- Input and Output capacitors

8.2.2.1 Power Dissipation and Device Operation

The permissible power dissipation for any package is a measure of the capability of the device to pass heat from the power source, the junctions of the device, to the ultimate heat sink, the ambient environment. Thus, the power dissipation is dependent on the ambient temperature and the thermal resistance across the various interfaces between the die junction and ambient air.

Copyright © 2014–2018, Texas Instruments Incorporated

The maximum allowable power dissipation for the device in a given package can be calculated using Equation 1:

$$P_{D\text{-}MAX} = ((T_{J\text{-}MAX} - T_A) / R_{\theta JA}) \quad (1)$$

The actual power being dissipated in the device can be represented by Equation 2:

$$P_D = (V_{IN} - V_{OUT}) \times I_{OUT} \quad (2)$$

Equation 1 and Equation 2 establish the relationship between the maximum power dissipation allowed due to thermal consideration, the voltage drop across the device, and the continuous current capability of the device. These two equations should be used to determine the optimum operating conditions for the device in the application.

In applications where lower power dissipation (P_D) and/or excellent package thermal resistance ($R_{\theta JA}$) is present, the maximum ambient temperature ($T_{A\text{-}MAX}$) may be increased.

In applications where high power dissipation and/or poor package thermal resistance is present, the maximum ambient temperature ($T_{A\text{-}MAX}$) may have to be derated. $T_{A\text{-}MAX}$ is dependent on the maximum operating junction temperature ($T_{J\text{-}MAX\text{-}OP}$ = 125°C), the maximum allowable power dissipation in the device package in the application ($P_{D\text{-}MAX}$), and the junction-to ambient thermal resistance of the part/package in the application ($R_{\theta JA}$), as given by Equation 3:

$$T_{A\text{-}MAX} = (T_{J\text{-}MAX\text{-}OP} - (R_{\theta JA} \times P_{D\text{-}MAX})) \quad (3)$$

Alternately, if $T_{A\text{-}MAX}$ can not be derated, the P_D value must be reduced. This can be accomplished by reducing V_{IN} in the $V_{IN} - V_{OUT}$ term as long as the minimum V_{IN} is met, or by reducing the I_{OUT} term, or by some combination of the two.

8.2.2.2 External Capacitors

Like most LDOs, the LP5907-Q1 requires external capacitors for regulator stability. The device is specifically designed for portable applications requiring minimum board space and smallest components. These capacitors must be correctly selected for good performance.

8.2.2.3 Input Capacitor

An input capacitor is required for stability. The input capacitor should be at least equal to, or greater than, the output capacitor for good load transient performance. At least a 1-µF capacitor has to be connected between the LP5907-Q1 input pin and ground for stable operation over full load current range. Basically, it is acceptable to have more output capacitance than input, as long as the input is at least 1 µF.

The input capacitor must be located a distance of not more than 1 cm from the IN pin and returned to a clean analog ground. Any good quality ceramic, tantalum, or film capacitor may be used at the input.

Important: To ensure stable operation it is essential that good PCB practices are employed to minimize ground impedance and keep input inductance low. If these conditions cannot be met, or if long leads are to be used to connect the battery or other power source to the LP5907-Q1, TI recommends increasing the input capacitor to at least 10 µF. Also, tantalum capacitors can suffer catastrophic failures due to surge current when connected to a low-impedance source of power (like a battery or a very large capacitor). If a tantalum capacitor is used at the input, it must be verified by the manufacturer to have a surge current rating sufficient for the application. The initial tolerance, applied voltage de-rating, and temperature coefficient must all be considered when selecting the input capacitor to ensure the actual capacitance is never less than 0.7 µF over the entire operating range.

8.2.2.4 Output Capacitor

The LP5907-Q1 is designed specifically to work with a very small ceramic output capacitor, typically 1 µF. A ceramic capacitor (dielectric types X5R or X7R) in the 1-µF to 10-µF range, and with equivalent series resistance (ESR) between 5 mΩ to 500 mΩ, is suitable in the LP5907-Q1 application circuit. For this device connect the output capacitor between the OUT pin and a good connection back to the GND pin.

It may also be possible to use tantalum or film capacitors at the device output, V_{OUT}, but these are not as attractive for reasons of size and cost (see *Capacitor Characteristics*).

The output capacitor must meet the requirement for the minimum value of capacitance and have an ESR value that is within the range 5 mΩ to 500 mΩ for stability. Like the input capacitor, the initial tolerance, applied voltage de-rating, and temperature coefficient must all be considered when selecting the input capacitor to ensure the actual capacitance is never less than 0.7 µF over the entire operating range.

Copyright © 2014–2018, Texas Instruments Incorporated

8.2.2.5 Capacitor Characteristics

The LP5907-Q1 is designed to work with ceramic capacitors on the input and output to take advantage of the benefits they offer. For capacitance values in the range of 1 µF to 10 µF, ceramic capacitors are the smallest, least expensive, and have the lowest ESR values, thus making them best for eliminating high frequency noise. The ESR of a typical 1-µF ceramic capacitor is in the range of 20 mΩ to 40 mΩ, which easily meets the ESR requirement for stability for the LP5907-Q1.

A better choice for temperature coefficient in a ceramic capacitor is X7R. This type of capacitor is the most stable and holds the capacitance within ±15% over the temperature range. Tantalum capacitors are less desirable than ceramic for use as output capacitors because they are more expensive when comparing equivalent capacitance and voltage ratings in the 1 µF to 10 µF range.

Another important consideration is that tantalum capacitors have higher ESR values than equivalent size ceramics. This means that while it may be possible to find a tantalum capacitor with an ESR value within the stable range, it would have to be larger in capacitance (which means bigger and more costly) than a ceramic capacitor with the same ESR value. The ESR of a typical tantalum increases about 2:1 as the temperature goes from 25°C down to –40°C, so some guard band must be allowed.

8.2.2.6 Remote Capacitor Operation

The LP5907-Q1 requires at least a 1-µF capacitor at the OUT pin, but there are no strict requirements about the location of the capacitor in regards to the pin. In practical designs the output capacitor may be located up to 10 cm away from the LDO. This means that there is no need to have a special capacitor close to the output pin if there is already respective capacitors in the system (like a capacitor at the input of supplied part). The remote capacitor feature helps user to minimize the number of capacitors in the system.

As a good design practice, keep the wiring parasitic inductance at a minimum, which means to use as wide as possible traces from the LDO output to the capacitors, keeping the LDO output trace layer as close as possible to ground layer and avoiding vias on the path. If there is a need to use vias, implement as many as possible vias between the connection layers. The recommendation is to keep parasitic wiring inductance less than 35 nH. For the applications with fast load transients, it is recommended to use an input capacitor equal to or larger to the sum of the capacitance at the output node for the best load transient performance.

8.2.2.7 No-Load Stability

The LP5907-Q1 remains stable, and in regulation, with no external load.

8.2.2.8 Enable Control

The LP5907-Q1 may be switched ON or OFF by a logic input at the EN pin. A voltage on this pin greater than V_{IH} turns the device on, while a voltage less than V_{IL} turns the device off.

When the EN pin is low, the regulator output is off and the device typically consumes less than 1 µA. Additionally, an output pulldown circuit is activated which ensures that any charge stored on C_{OUT} is discharged to ground.

If the application does not require the use of the shutdown feature, the EN pin can be tied directly to the IN pin to keep the regulator output permanently on.

An internal 1-MΩ pulldown resistor ties the EN input to ground, ensuring that the device remains off if the EN pin is left open circuit. To ensure proper operation, the signal source used to drive the EN pin must be able to swing above and below the specified turnon or turnoff voltage thresholds listed in the *Electrical Characteristics* under V_{IL} and V_{IH}.

Copyright © 2014–2018, Texas Instruments Incorporated

8.2.3 Application Curves

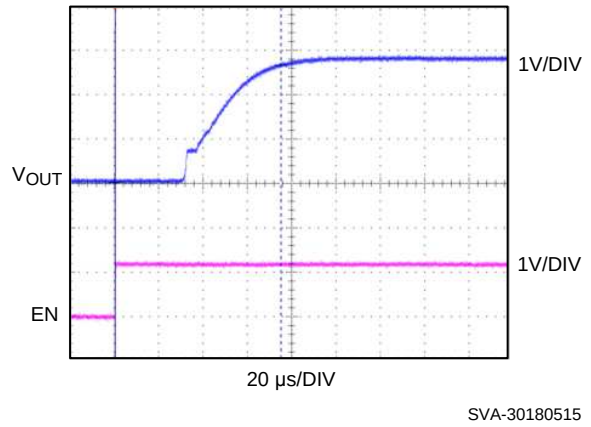

Figure 21. Start-Up

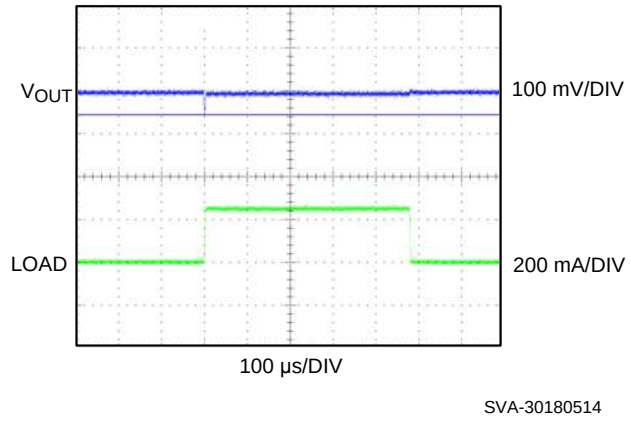

Figure 22. Load Transient Response

9 Power Supply Recommendations

This device is designed to operate from an input supply voltage range of 2.2 V to 5.5 V. The input supply must be well regulated and free of spurious noise. To ensure that the LP5907-Q1 output voltage is well regulated and dynamic performance is optimum, the input supply must be at least V_{OUT} + 1 V. A minimum capacitor value of 1 µF is required to be within 1 cm of the IN pin.

10 Layout

10.1 Layout Guidelines

The dynamic performance of the LP5907-Q1 is dependant on the layout of the PCB. PCB layout practices that are adequate for typical LDOs may degrade the PSRR, noise, or transient performance of the LP5907-Q1.

Best performance is achieved by placing C_{IN} and C_{OUT} on the same side of the PCB as the LP5907-Q1, and as close as is practical to the package. The ground connections for C_{IN} and C_{OUT} must be back to the LP5907-Q1 ground pin using as wide and short copper traces as are practical.

Avoid connections using long trace lengths, narrow trace widths, and/or connections through vias. These add parasitic inductances and resistance that results in inferior performance especially during transient conditions

10.2 Layout Example

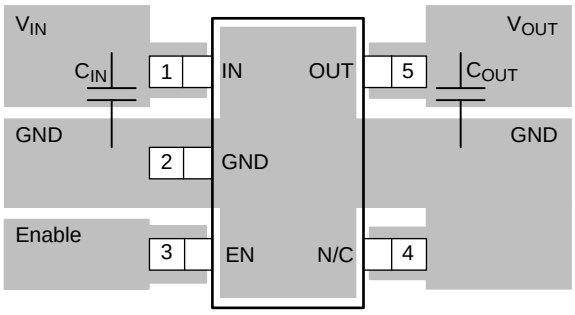

Figure 23. LP5907MF-x.x (SOT-23) Typical Layout

11 デバイスおよびドキュメントのサポート

11.1 ドキュメントの更新通知を受け取る方法

ドキュメントの更新についての通知を受け取るには、ti.comのデバイス製品フォルダを開いてください。右上の隅にある「*通知を受け取る*」をクリックして登録すると、変更されたすべての製品情報に関するダイジェストを毎週受け取れます。変更の詳細については、修正されたドキュメントに含まれている改訂履歴をご覧ください。

11.2 コミュニティ・リソース

The following links connect to TI community resources. Linked contents are provided "AS IS" by the respective contributors. They do not constitute TI specifications and do not necessarily reflect TI's views; see TI's Terms of Use.

TI E2E™オンライン・コミュニティ ***TIのE2E（Engineer-to-Engineer）コミュニティ。***エンジニア間の共同作業を促進するために開設されたものです。e2e.ti.comでは、他のエンジニアに質問し、知識を共有し、アイディアを検討して、問題解決に役立てることができます。

設計サポート ***TIの設計サポート*** 役に立つE2Eフォーラムや、設計サポート・ツールをすばやく見つけることができます。技術サポート用の連絡先情報も参照できます。

11.3 商標

E2E is a trademark of Texas Instruments.
All other trademarks are the property of their respective owners.

11.4 静電気放電に関する注意事項

これらのデバイスは、限定的なESD（静電破壊）保護機能を内 蔵しています。保存時または取り扱い時は、MOSゲートに対す る静電破壊を防止するために、リード線同士をショートさせて おくか、デバイスを導電フォームに入れる必要があります。

11.5 Glossary

SLYZ022 — *TI Glossary*.

This glossary lists and explains terms, acronyms, and definitions.

12 メカニカル、パッケージ、および注文情報

以降のページには、メカニカル、パッケージ、および注文に関する情報が記載されています。この情報は、そのデバイスについて利用可能な最新のデータです。このデータは予告なく変更されることがあり、ドキュメントが改訂される場合もあります。本データシートのブラウザ版を使用されている場合は、画面左側の説明をご覧ください。

Copyright © 2014–2018, Texas Instruments Incorporated

PACKAGING INFORMATION

Orderable part number	Status (1)	Material type (2)	Package | Pins	Package qty | Carrier	RoHS (3)	Lead finish/ Ball material (4)	MSL rating/ Peak reflow (5)	Op temp (°C)	Part marking (6)
LP590712QDQNRQ1	Active	Production	X2SON (DQN) | 4	3000 | LARGE T&R	Yes	NIPDAUAG	Level-2-260C-1 YEAR	-40 to 125	D1
LP590712QDQNRQ1.B	Active	Production	X2SON (DQN) | 4	3000 | LARGE T&R	Yes	NIPDAUAG	Level-2-260C-1 YEAR	-40 to 125	D1
LP590713QDQNRQ1	Active	Production	X2SON (DQN) | 4	3000 | LARGE T&R	Yes	NIPDAUAG	Level-2-260C-1 YEAR	-40 to 125	D2
LP590713QDQNRQ1.B	Active	Production	X2SON (DQN) | 4	3000 | LARGE T&R	Yes	NIPDAUAG	Level-2-260C-1 YEAR	-40 to 125	D2
LP590715QDQNRQ1	Active	Production	X2SON (DQN) | 4	3000 | LARGE T&R	Yes	NIPDAUAG	Level-2-260C-1 YEAR	-40 to 125	D3
LP590715QDQNRQ1.B	Active	Production	X2SON (DQN) | 4	3000 | LARGE T&R	Yes	NIPDAUAG	Level-2-260C-1 YEAR	-40 to 125	D3
LP590718QDQNRQ1	Active	Production	X2SON (DQN) | 4	3000 | LARGE T&R	Yes	NIPDAUAG	Level-2-260C-1 YEAR	-40 to 125	D4
LP590718QDQNRQ1.B	Active	Production	X2SON (DQN) | 4	3000 | LARGE T&R	Yes	NIPDAUAG	Level-2-260C-1 YEAR	-40 to 125	D4
LP590722QDQNRQ1	Active	Production	X2SON (DQN) | 4	3000 | LARGE T&R	Yes	NIPDAUAG	Level-2-260C-1 YEAR	-40 to 125	FV
LP590722QDQNRQ1.B	Active	Production	X2SON (DQN) | 4	3000 | LARGE T&R	Yes	NIPDAUAG	Level-2-260C-1 YEAR	-40 to 125	FV
LP590725QDQNRQ1	Active	Production	X2SON (DQN) | 4	3000 | LARGE T&R	Yes	NIPDAUAG	Level-2-260C-1 YEAR	-40 to 125	D5
LP590725QDQNRQ1.B	Active	Production	X2SON (DQN) | 4	3000 | LARGE T&R	Yes	NIPDAUAG	Level-2-260C-1 YEAR	-40 to 125	D5
LP5907285QDQNRQ1	Active	Production	X2SON (DQN) | 4	3000 | LARGE T&R	Yes	NIPDAUAG	Level-2-260C-1 YEAR	-40 to 125	D7
LP5907285QDQNRQ1.B	Active	Production	X2SON (DQN) | 4	3000 | LARGE T&R	Yes	NIPDAUAG	Level-2-260C-1 YEAR	-40 to 125	D7
LP590728QDQNRQ1	Active	Production	X2SON (DQN) | 4	3000 | LARGE T&R	Yes	NIPDAUAG	Level-2-260C-1 YEAR	-40 to 125	D6
LP590728QDQNRQ1.B	Active	Production	X2SON (DQN) | 4	3000 | LARGE T&R	Yes	NIPDAUAG	Level-2-260C-1 YEAR	-40 to 125	D6
LP590729QDQNRQ1	Active	Production	X2SON (DQN) | 4	3000 | LARGE T&R	Yes	NIPDAUAG	Level-2-260C-1 YEAR	-40 to 125	D8
LP590729QDQNRQ1.B	Active	Production	X2SON (DQN) | 4	3000 | LARGE T&R	Yes	NIPDAUAG	Level-2-260C-1 YEAR	-40 to 125	D8
LP590730QDQNRQ1	Active	Production	X2SON (DQN) | 4	3000 | LARGE T&R	Yes	NIPDAUAG	Level-2-260C-1 YEAR	-40 to 125	D9
LP590730QDQNRQ1.B	Active	Production	X2SON (DQN) | 4	3000 | LARGE T&R	Yes	NIPDAUAG	Level-2-260C-1 YEAR	-40 to 125	D9
LP590733QDQNRQ1	Active	Production	X2SON (DQN) | 4	3000 | LARGE T&R	Yes	NIPDAUAG	Level-2-260C-1 YEAR	-40 to 125	DA
LP590733QDQNRQ1.B	Active	Production	X2SON (DQN) | 4	3000 | LARGE T&R	Yes	NIPDAUAG	Level-2-260C-1 YEAR	-40 to 125	DA
LP590738QDQNRQ1	Active	Production	X2SON (DQN) | 4	3000 | LARGE T&R	Yes	NIPDAUAG	Level-2-260C-1 YEAR	-40 to 125	DB
LP590738QDQNRQ1.B	Active	Production	X2SON (DQN) | 4	3000 | LARGE T&R	Yes	NIPDAUAG	Level-2-260C-1 YEAR	-40 to 125	DB
LP590745QDQNRQ1	Active	Production	X2SON (DQN) | 4	3000 | LARGE T&R	Yes	NIPDAUAG	Level-2-260C-1 YEAR	-40 to 125	DC
LP590745QDQNRQ1.B	Active	Production	X2SON (DQN) | 4	3000 | LARGE T&R	Yes	NIPDAUAG	Level-2-260C-1 YEAR	-40 to 125	DC
LP5907QMFX-1.2Q1	Active	Production	SOT-23 (DBV) | 5	3000 | LARGE T&R	Yes	SN	Level-1-260C-UNLIM	-40 to 125	RAFQ
LP5907QMFX-1.2Q1.A	Active	Production	SOT-23 (DBV) | 5	3000 | LARGE T&R	Yes	SN	Level-1-260C-UNLIM	-40 to 125	RAFQ
LP5907QMFX-1.2Q1.B	Active	Production	SOT-23 (DBV) | 5	3000 | LARGE T&R	Yes	SN	Level-1-260C-UNLIM	-40 to 125	RAFQ

Orderable part number	Status (1)	Material type (2)	Package | Pins	Package qty | Carrier	RoHS (3)	Lead finish/ Ball material (4)	MSL rating/ Peak reflow (5)	Op temp (°C)	Part marking (6)
LP5907QMFX-1.8Q1	Active	Production	SOT-23 (DBV) | 5	3000 | LARGE T&R	Yes	SN	Level-1-260C-UNLIM	-40 to 125	RAGQ
LP5907QMFX-1.8Q1.A	Active	Production	SOT-23 (DBV) | 5	3000 | LARGE T&R	Yes	SN	Level-1-260C-UNLIM	-40 to 125	RAGQ
LP5907QMFX-1.8Q1.B	Active	Production	SOT-23 (DBV) | 5	3000 | LARGE T&R	Yes	SN	Level-1-260C-UNLIM	-40 to 125	RAGQ
LP5907QMFX-2.5Q1	Active	Production	SOT-23 (DBV) | 5	3000 | LARGE T&R	Yes	SN	Level-1-260C-UNLIM	-40 to 125	RAJQ
LP5907QMFX-2.5Q1.A	Active	Production	SOT-23 (DBV) | 5	3000 | LARGE T&R	Yes	SN	Level-1-260C-UNLIM	-40 to 125	RAJQ
LP5907QMFX-2.5Q1.B	Active	Production	SOT-23 (DBV) | 5	3000 | LARGE T&R	Yes	SN	Level-1-260C-UNLIM	-40 to 125	RAJQ
LP5907QMFX-2.8Q1	Active	Production	SOT-23 (DBV) | 5	3000 | LARGE T&R	Yes	SN	Level-1-260C-UNLIM	-40 to 125	RAKQ
LP5907QMFX-2.8Q1.A	Active	Production	SOT-23 (DBV) | 5	3000 | LARGE T&R	Yes	SN	Level-1-260C-UNLIM	-40 to 125	RAKQ
LP5907QMFX-2.8Q1.B	Active	Production	SOT-23 (DBV) | 5	3000 | LARGE T&R	Yes	SN	Level-1-260C-UNLIM	-40 to 125	RAKQ
LP5907QMFX-3.0Q1	Active	Production	SOT-23 (DBV) | 5	3000 | LARGE T&R	Yes	SN	Level-1-260C-UNLIM	-40 to 125	RALQ
LP5907QMFX-3.0Q1.A	Active	Production	SOT-23 (DBV) | 5	3000 | LARGE T&R	Yes	SN	Level-1-260C-UNLIM	-40 to 125	RALQ
LP5907QMFX-3.0Q1.B	Active	Production	SOT-23 (DBV) | 5	3000 | LARGE T&R	Yes	SN	Level-1-260C-UNLIM	-40 to 125	RALQ
LP5907QMFX-3.3Q1	Active	Production	SOT-23 (DBV) | 5	3000 | LARGE T&R	Yes	SN	Level-1-260C-UNLIM	-40 to 125	RAHQ
LP5907QMFX-3.3Q1.A	Active	Production	SOT-23 (DBV) | 5	3000 | LARGE T&R	Yes	SN	Level-1-260C-UNLIM	-40 to 125	RAHQ
LP5907QMFX-3.3Q1.B	Active	Production	SOT-23 (DBV) | 5	3000 | LARGE T&R	Yes	SN	Level-1-260C-UNLIM	-40 to 125	RAHQ
LP5907QMFX-3.8Q1	Active	Production	SOT-23 (DBV) | 5	3000 | LARGE T&R	Yes	SN	Level-1-260C-UNLIM	-40 to 125	RAMQ
LP5907QMFX-3.8Q1.A	Active	Production	SOT-23 (DBV) | 5	3000 | LARGE T&R	Yes	SN	Level-1-260C-UNLIM	-40 to 125	RAMQ
LP5907QMFX-3.8Q1.B	Active	Production	SOT-23 (DBV) | 5	3000 | LARGE T&R	Yes	SN	Level-1-260C-UNLIM	-40 to 125	RAMQ
LP5907QMFX-4.5Q1	Active	Production	SOT-23 (DBV) | 5	3000 | LARGE T&R	Yes	Call TI | Sn	Level-1-260C-UNLIM	-40 to 125	RAIQ
LP5907QMFX-4.5Q1.A	Active	Production	SOT-23 (DBV) | 5	3000 | LARGE T&R	Yes	Call TI	Level-1-260C-UNLIM	-40 to 125	RAIQ
LP5907QMFX-4.5Q1.B	Active	Production	SOT-23 (DBV) | 5	3000 | LARGE T&R	Yes	Call TI	Level-1-260C-UNLIM	-40 to 125	RAIQ

(1) **Status:** For more details on status, see our product life cycle.

(2) **Material type:** When designated, preproduction parts are prototypes/experimental devices, and are not yet approved or released for full production. Testing and final process, including without limitation quality assurance, reliability performance testing, and/or process qualification, may not yet be complete, and this item is subject to further changes or possible discontinuation. If available for ordering, purchases will be subject to an additional waiver at checkout, and are intended for early internal evaluation purposes only. These items are sold without warranties of any kind.

(3) **RoHS values:** Yes, No, RoHS Exempt. See the TI RoHS Statement for additional information and value definition.

(4) **Lead finish/Ball material:** Parts may have multiple material finish options. Finish options are separated by a vertical ruled line. Lead finish/Ball material values may wrap to two lines if the finish value exceeds the maximum column width.

(5) **MSL rating/Peak reflow:** The moisture sensitivity level ratings and peak solder (reflow) temperatures. In the event that a part has multiple moisture sensitivity ratings, only the lowest level per JEDEC standards is shown. Refer to the shipping label for the actual reflow temperature that will be used to mount the part to the printed circuit board.

(6) **Part marking:** There may be an additional marking, which relates to the logo, the lot trace code information, or the environmental category of the part.

Multiple part markings will be inside parentheses. Only one part marking contained in parentheses and separated by a "~" will appear on a part. If a line is indented then it is a continuation of the previous line and the two combined represent the entire part marking for that device.

Important Information and Disclaimer: The information provided on this page represents TI's knowledge and belief as of the date that it is provided. TI bases its knowledge and belief on information provided by third parties, and makes no representation or warranty as to the accuracy of such information. Efforts are underway to better integrate information from third parties. TI has taken and continues to take reasonable steps to provide representative and accurate information but may not have conducted destructive testing or chemical analysis on incoming materials and chemicals. TI and TI suppliers consider certain information to be proprietary, and thus CAS numbers and other limited information may not be available for release.

In no event shall TI's liability arising out of such information exceed the total purchase price of the TI part(s) at issue in this document sold by TI to Customer on an annual basis.

OTHER QUALIFIED VERSIONS OF LP5907-Q1 :

- Catalog : LP5907

NOTE: Qualified Version Definitions:

- Catalog - TI's standard catalog product

TAPE AND REEL INFORMATION

REEL DIMENSIONS

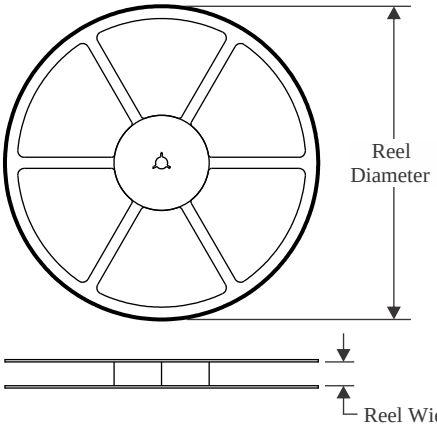

TAPE DIMENSIONS

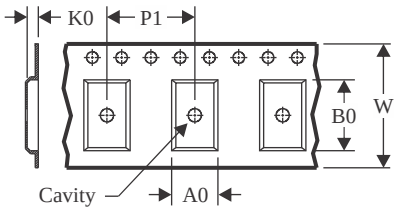

A0	Dimension designed to accommodate the component width
B0	Dimension designed to accommodate the component length
K0	Dimension designed to accommodate the component thickness
W	Overall width of the carrier tape
P1	Pitch between successive cavity centers

QUADRANT ASSIGNMENTS FOR PIN 1 ORIENTATION IN TAPE

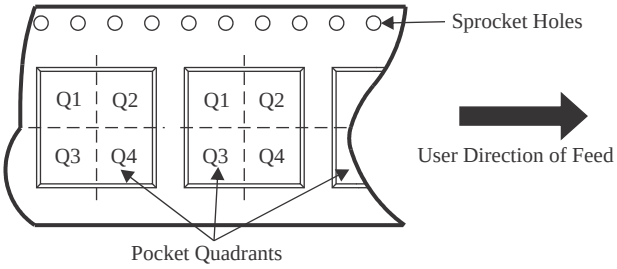

*All dimensions are nominal

Device	Package Type	Package Drawing	Pins	SPQ	Reel Diameter (mm)	Reel Width W1 (mm)	A0 (mm)	B0 (mm)	K0 (mm)	P1 (mm)	W (mm)	Pin1 Quadrant
LP590712QDQNRQ1	X2SON	DQN	4	3000	180.0	8.4	1.16	1.16	0.63	4.0	8.0	Q2
LP590713QDQNRQ1	X2SON	DQN	4	3000	180.0	8.4	1.16	1.16	0.63	4.0	8.0	Q2
LP590715QDQNRQ1	X2SON	DQN	4	3000	180.0	8.4	1.16	1.16	0.63	4.0	8.0	Q2
LP590718QDQNRQ1	X2SON	DQN	4	3000	180.0	8.4	1.16	1.16	0.63	4.0	8.0	Q2
LP590722QDQNRQ1	X2SON	DQN	4	3000	180.0	8.4	1.16	1.16	0.63	4.0	8.0	Q2
LP590725QDQNRQ1	X2SON	DQN	4	3000	180.0	8.4	1.16	1.16	0.63	4.0	8.0	Q2
LP5907285QDQNRQ1	X2SON	DQN	4	3000	180.0	8.4	1.16	1.16	0.63	4.0	8.0	Q2
LP590728QDQNRQ1	X2SON	DQN	4	3000	180.0	8.4	1.16	1.16	0.63	4.0	8.0	Q2
LP590729QDQNRQ1	X2SON	DQN	4	3000	180.0	8.4	1.16	1.16	0.63	4.0	8.0	Q2
LP590730QDQNRQ1	X2SON	DQN	4	3000	180.0	8.4	1.16	1.16	0.63	4.0	8.0	Q2
LP590733QDQNRQ1	X2SON	DQN	4	3000	180.0	8.4	1.16	1.16	0.63	4.0	8.0	Q2
LP590738QDQNRQ1	X2SON	DQN	4	3000	180.0	8.4	1.16	1.16	0.63	4.0	8.0	Q2
LP590745QDQNRQ1	X2SON	DQN	4	3000	180.0	8.4	1.16	1.16	0.63	4.0	8.0	Q2
LP5907QMFX-1.2Q1	SOT-23	DBV	5	3000	178.0	8.4	3.2	3.2	1.4	4.0	8.0	Q3
LP5907QMFX-1.8Q1	SOT-23	DBV	5	3000	178.0	8.4	3.2	3.2	1.4	4.0	8.0	Q3
LP5907QMFX-2.5Q1	SOT-23	DBV	5	3000	178.0	8.4	3.2	3.2	1.4	4.0	8.0	Q3

Device	Package Type	Package Drawing	Pins	SPQ	Reel Diameter (mm)	Reel Width W1 (mm)	A0 (mm)	B0 (mm)	K0 (mm)	P1 (mm)	W (mm)	Pin1 Quadrant
LP5907QMFX-2.8Q1	SOT-23	DBV	5	3000	178.0	8.4	3.2	3.2	1.4	4.0	8.0	Q3
LP5907QMFX-3.0Q1	SOT-23	DBV	5	3000	178.0	8.4	3.2	3.2	1.4	4.0	8.0	Q3
LP5907QMFX-3.3Q1	SOT-23	DBV	5	3000	178.0	8.4	3.2	3.2	1.4	4.0	8.0	Q3
LP5907QMFX-3.8Q1	SOT-23	DBV	5	3000	178.0	8.4	3.2	3.2	1.4	4.0	8.0	Q3
LP5907QMFX-4.5Q1	SOT-23	DBV	5	3000	178.0	8.4	3.2	3.2	1.4	4.0	8.0	Q3

TAPE AND REEL BOX DIMENSIONS

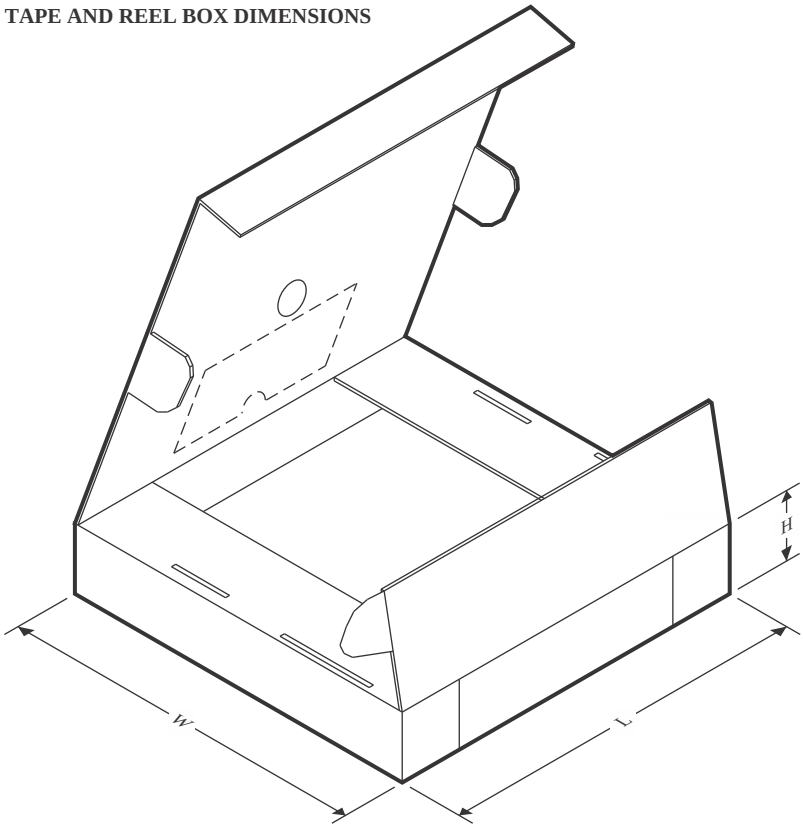

*All dimensions are nominal

Device	Package Type	Package Drawing	Pins	SPQ	Length (mm)	Width (mm)	Height (mm)
LP590712QDQNRQ1	X2SON	DQN	4	3000	213.0	191.0	35.0
LP590713QDQNRQ1	X2SON	DQN	4	3000	213.0	191.0	35.0
LP590715QDQNRQ1	X2SON	DQN	4	3000	213.0	191.0	35.0
LP590718QDQNRQ1	X2SON	DQN	4	3000	213.0	191.0	35.0
LP590722QDQNRQ1	X2SON	DQN	4	3000	213.0	191.0	35.0
LP590725QDQNRQ1	X2SON	DQN	4	3000	213.0	191.0	35.0
LP5907285QDQNRQ1	X2SON	DQN	4	3000	213.0	191.0	35.0
LP590728QDQNRQ1	X2SON	DQN	4	3000	213.0	191.0	35.0
LP590729QDQNRQ1	X2SON	DQN	4	3000	213.0	191.0	35.0
LP590730QDQNRQ1	X2SON	DQN	4	3000	213.0	191.0	35.0
LP590733QDQNRQ1	X2SON	DQN	4	3000	213.0	191.0	35.0
LP590738QDQNRQ1	X2SON	DQN	4	3000	213.0	191.0	35.0
LP590745QDQNRQ1	X2SON	DQN	4	3000	213.0	191.0	35.0
LP5907QMFX-1.2Q1	SOT-23	DBV	5	3000	208.0	191.0	35.0
LP5907QMFX-1.8Q1	SOT-23	DBV	5	3000	208.0	191.0	35.0
LP5907QMFX-2.5Q1	SOT-23	DBV	5	3000	208.0	191.0	35.0
LP5907QMFX-2.8Q1	SOT-23	DBV	5	3000	208.0	191.0	35.0
LP5907QMFX-3.0Q1	SOT-23	DBV	5	3000	208.0	191.0	35.0

Device	Package Type	Package Drawing	Pins	SPQ	Length (mm)	Width (mm)	Height (mm)
LP5907QMFX-3.3Q1	SOT-23	DBV	5	3000	208.0	191.0	35.0
LP5907QMFX-3.8Q1	SOT-23	DBV	5	3000	208.0	191.0	35.0
LP5907QMFX-4.5Q1	SOT-23	DBV	5	3000	208.0	191.0	35.0

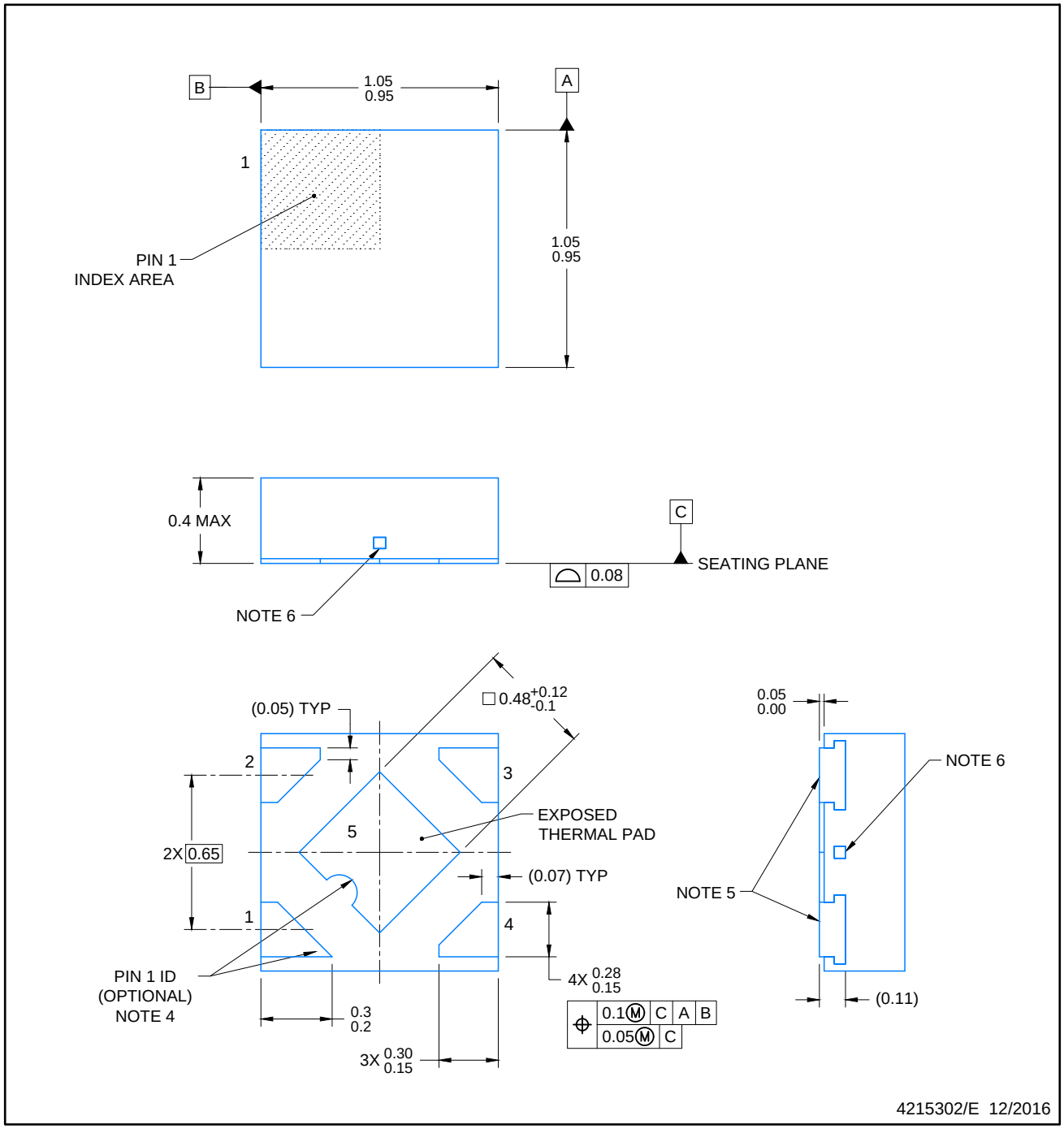

NOTES:

1. All linear dimensions are in millimeters. Any dimensions in parenthesis are for reference only. Dimensioning and tolerancing per ASME Y14.5M.
2. This drawing is subject to change without notice.
3. The package thermal pad must be soldered to the printed circuit board for optimal thermal and mechanical performance.
4. Features may not exist. Recommend use of pin 1 marking on top of package for orientation purposes.
5. Shape of exposed side leads may differ.
6. Number and location of exposed tie bars may vary.

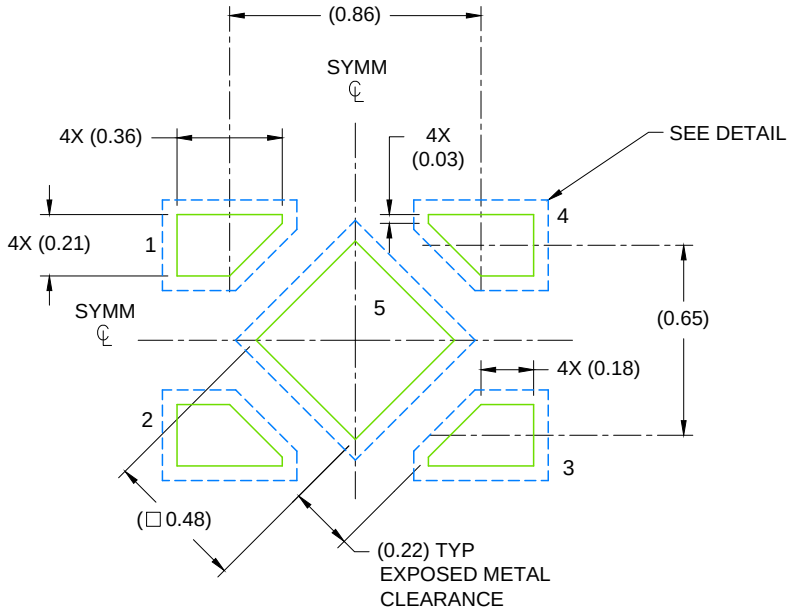

LAND PATTERN EXAMPLE
SCALE: 40X

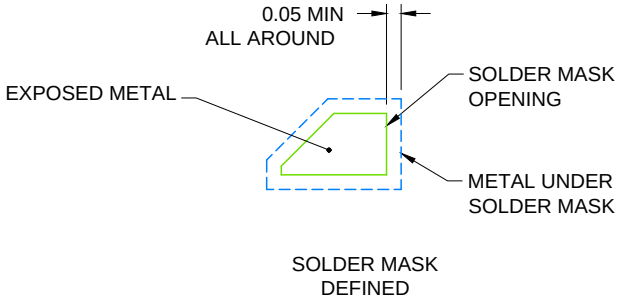

SOLDER MASK DETAIL

4215302/E 12/2016

NOTES: (continued)

7. This package is designed to be soldered to a thermal pad on the board. For more information, see Texas Instruments literature number SLUA271 (www.ti.com/lit/slua271).
8. If any vias are implemented, it is recommended that vias under paste be filled, plugged or tented.

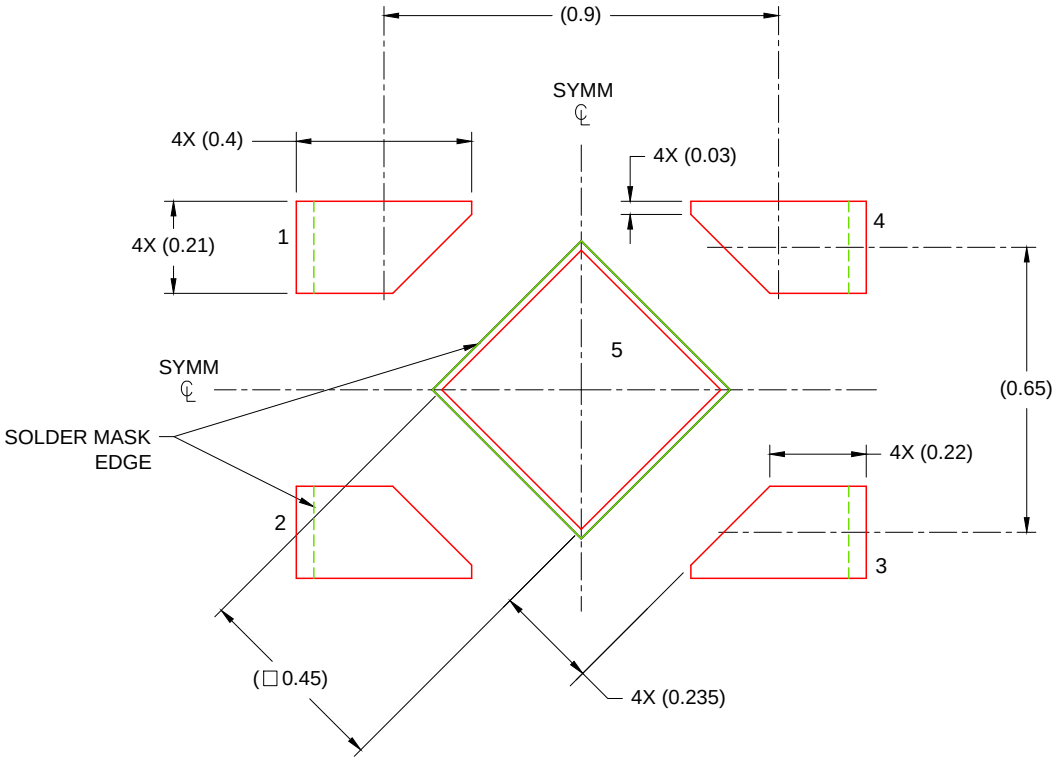

SOLDER PASTE EXAMPLE
BASED ON 0.075 - 0.1mm THICK STENCIL

EXPOSED PAD
88% PRINTED SOLDER COVERAGE BY AREA
SCALE: 60X

4215302/E 12/2016

NOTES: (continued)

9. Laser cutting apertures with trapezoidal walls and rounded corners may offer better paste release. IPC-7525 may have alternate design recommendations.

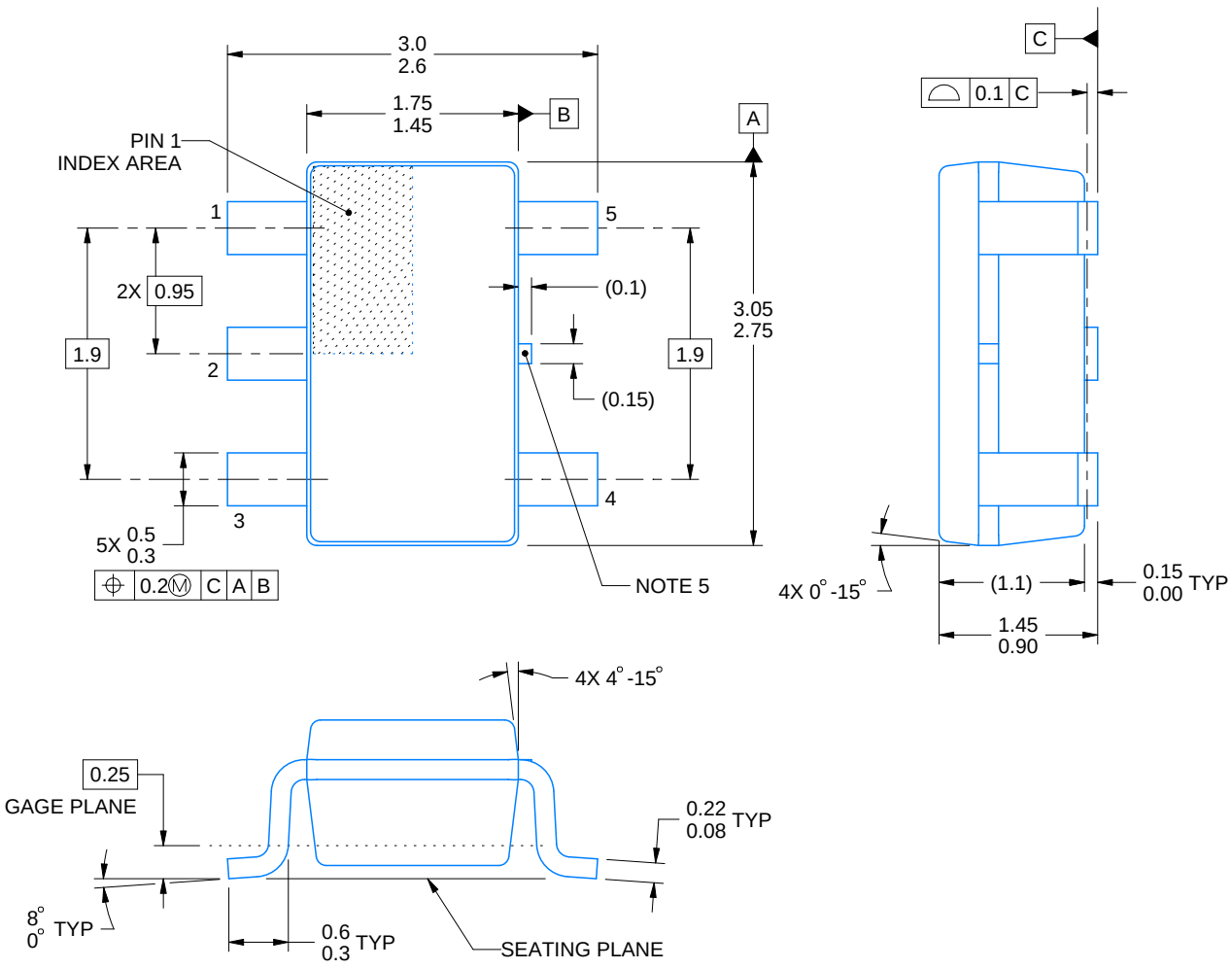

4214839/K 08/2024

NOTES:

1. All linear dimensions are in millimeters. Any dimensions in parenthesis are for reference only. Dimensioning and tolerancing per ASME Y14.5M.
2. This drawing is subject to change without notice.
3. Refernce JEDEC MO-178.
4. Body dimensions do not include mold flash, protrusions, or gate burrs. Mold flash, protrusions, or gate burrs shall not exceed 0.25 mm per side.
5. Support pin may differ or may not be present.

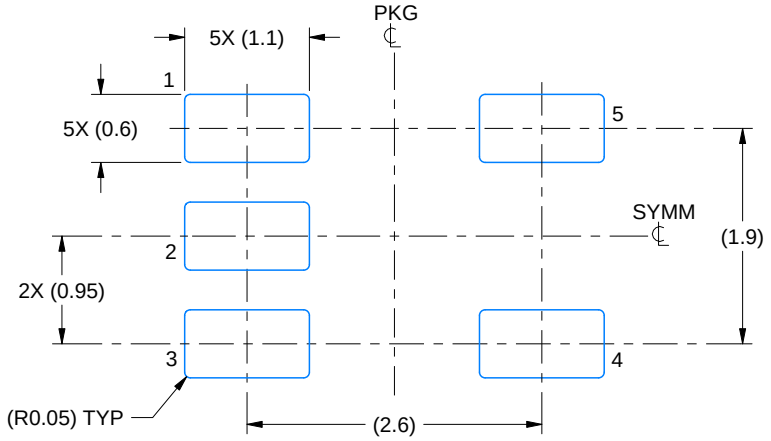

LAND PATTERN EXAMPLE
EXPOSED METAL SHOWN
SCALE:15X

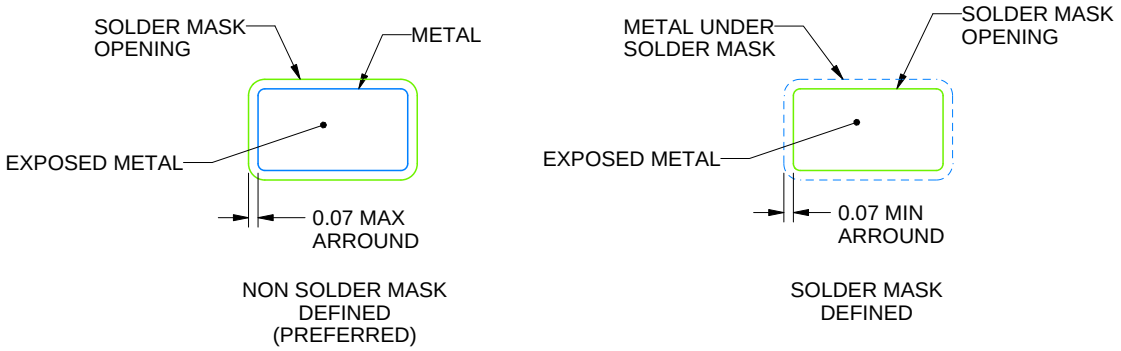

SOLDER MASK DETAILS

4214839/K 08/2024

NOTES: (continued)

6. Publication IPC-7351 may have alternate designs.
7. Solder mask tolerances between and around signal pads can vary based on board fabrication site.

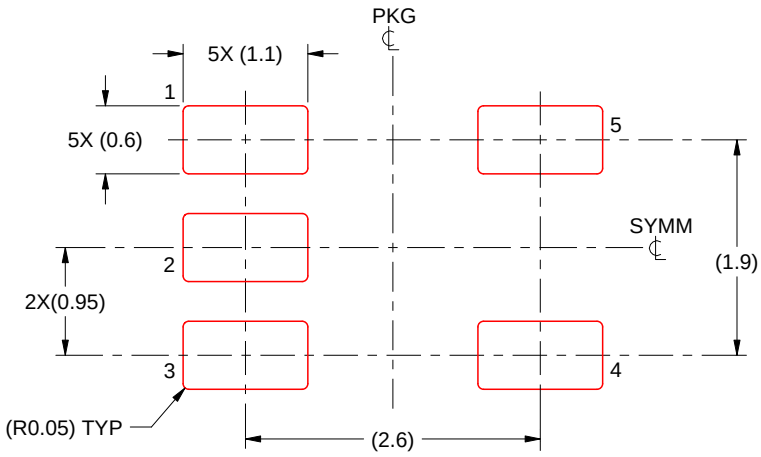

SOLDER PASTE EXAMPLE
BASED ON 0.125 mm THICK STENCIL
SCALE:15X

4214839/K 08/2024

NOTES: (continued)

8. Laser cutting apertures with trapezoidal walls and rounded corners may offer better paste release. IPC-7525 may have alternate design recommendations.
9. Board assembly site may have different recommendations for stencil design.

重要なお知らせと免責事項

テキサス· インスツルメンツは、技術データと信頼性データ (データシートを含みます)、設計リソース (リファレンス デザインを含みます)、アプリケーションや設計に関する各種アドバイス、Web ツール、安全性情報、その他のリソースを、欠陥が存在する可能性のある「現状のまま」提供しており、商品性および特定目的に対する適合性の黙示保証、第三者の知的財産権の非侵害保証を含むいかなる保証も、明示的または黙示的にかかわらず拒否します。

これらのリソースは、 テキサス· インスツルメンツ製品を使用する設計の経験を積んだ開発者への提供を意図したものです。(1) お客様のアプリケーションに適した テキサス· インスツルメンツ製品の選定、(2) お客様のアプリケーションの設計、検証、試験、(3) お客様のアプリケーションに該当する各種規格や、その他のあらゆる安全性、セキュリティ、規制、または他の要件への確実な適合に関する責任を、お客様のみが単独で負うものとします。

上記の各種リソースは、予告なく変更される可能性があります。これらのリソースは、リソースで説明されている テキサス· インスツルメンツ製品を使用するアプリケーションの開発の目的でのみ、 テキサス· インスツルメンツはその使用をお客様に許諾します。これらのリソースに関して、他の目的で複製することや掲載することは禁止されています。 テキサス· インスツルメンツや第三者の知的財産権のライセンスが付与されている訳ではありません。お客様は、これらのリソースを自身で使用した結果発生するあらゆる申し立て、損害、費用、損失、責任について、 テキサス· インスツルメンツおよびその代理人を完全に補償するものとし、 テキサス· インスツルメンツは一切の責任を拒否します。

テキサス· インスツルメンツの製品は、 テキサス· インスツルメンツの販売条件、または ti.com やかかる テキサス· インスツルメンツ製品の関連資料などのいずれかを通じて提供する適用可能な条項の下で提供されています。 テキサス· インスツルメンツがこれらのリソースを提供することは、適用される テキサス· インスツルメンツの保証または他の保証の放棄の拡大や変更を意味するものではありません。

お客様がいかなる追加条項または代替条項を提案した場合でも、 テキサス· インスツルメンツはそれらに異議を唱え、拒否します。

郵送先住所：Texas Instruments, Post Office Box 655303, Dallas, Texas 75265
Copyright © 2025, Texas Instruments Incorporated