DRV5021 低電圧、ユニポーラ、デジタル・スイッチ・ホール・エフェクト・センサ

1 特長

- デジタル・ユニポーラ・スイッチ・ホール・センサ
- 2.5V～5.5VのV_{CC}範囲で動作
- 磁気感度オプション(B_{OP}、B_{RP})
  - DRV5021A1: 2.9mT、1.8mT
  - DRV5021A2: 9.2mT、7.0mT
  - DRV5021A3: 17.9mT、14.1mT
- 高速な30kHzセンシング帯域幅
- オープン・ドレイン出力能力20mA
- 最適化された低電圧アーキテクチャ
- 内蔵ヒステリシスによりノイズ耐性が向上
- 動作温度範囲: -40°C～125°C
- 標準の産業用パッケージ
  - 表面実装のSOT-23

2 アプリケーション

- 家電製品
- 産業用バルブ、ソレノイド
- リミット・スイッチ
- 汎用近接センシング
- ブラシ付きDCモータ・フィードバック
- ドッキング検出
- ドアの開閉検出
- パルスのカウント

3 概要

DRV5021デバイスは、高速アプリケーション用の低電圧、デジタル・スイッチ、ホール・エフェクト・センサです。このデバイスは2.5V～5.5Vの電源電圧で動作し、磁束密度を検出して、事前定義された磁気スレッショルドに基づいてデジタルで出力します。

このデバイスは、パッケージの表面に垂直な磁界を検出します。印加された磁束密度が磁気動作ポイント(B_{OP})スレッショルドを超える場合、デバイスのオープン・ドレイン出力がLOW電圧を駆動します。磁束密度が磁気リリース・ポイント(B_{RP})スレッショルドより低下した場合、出力は高インピーダンスに移行します。B_{OP}とB_{RP}を別にしていることでヒステリシスが設定され、入力ノイズによる出力エラーの発生を防止します。この構成により、システム設計がノイズ干渉に対して強固になります。

このデバイスは、-40°C～+125°Cの広い周囲温度範囲で一貫した動作を行います。

製品情報(1)

型番	パッケージ	本体サイズ(公称)
DRV5021	SOT-23 (3)	2.90mm×1.30mm

(1) 利用可能なすべてのパッケージについては、このデータシートの末尾にあるパッケージ・オプションについての付録を参照してください。

標準アプリケーション回路図

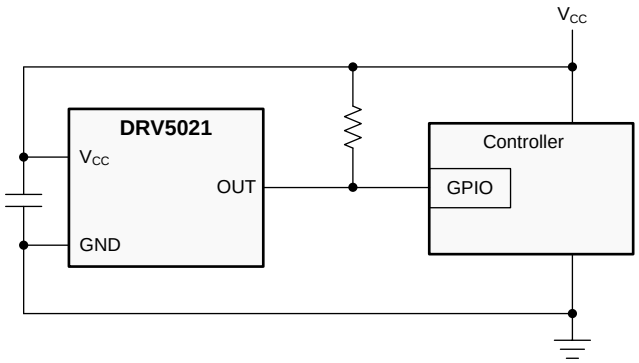

磁気応答

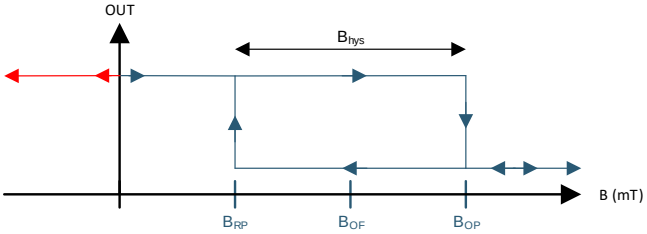

英語版のTI製品についての情報を翻訳したこの資料は、製品の概要を確認する目的で便宜的に提供しているものです。該当する正式な英語版の最新情報は、www.ti.comで閲覧でき、その内容が常に優先されます。TIでは翻訳の正確性および妥当性につきましては一切保証いたしません。実際の設計などの前には、必ず最新版の英語版をご参照くださいますようお願いいたします。

目次

1 特長 ... 1
2 アプリケーション ... 1
3 概要 ... 1
4 改訂履歴 ... 2
5 **Pin Configuration and Functions** ... 3
6 **Specifications** ... 3
6.1 Absolute Maximum Ratings ... 3
6.2 ESD Ratings ... 3
6.3 Recommended Operating Conditions ... 4
6.4 Thermal Information ... 4
6.5 Electrical Characteristics ... 4
6.6 Magnetic Characteristics ... 4
6.7 Typical Characteristics ... 5
7 **Detailed Description** ... 7
7.1 Overview ... 7
7.2 Functional Block Diagram ... 7
7.3 Feature Description ... 7
7.4 Device Functional Modes ... 13
8 **Application and Implementation** ... 14
8.1 Application Information ... 14
8.2 Typical Applications ... 14
9 **Power Supply Recommendations** ... 17
10 **Layout** ... 17
10.1 Layout Guidelines ... 17
10.2 Layout Example ... 17
11 デバイスおよびドキュメントのサポート ... 18
11.1 ドキュメントのサポート ... 18
11.2 ドキュメントの更新通知を受け取る方法 ... 18
11.3 コミュニティ・リソース ... 18
11.4 商標 ... 18
11.5 静電気放電に関する注意事項 ... 18
11.6 Glossary ... 18
12 メカニカル、パッケージ、および注文情報 ... 18

4 改訂履歴

資料番号末尾の英字は改訂を表しています。その改訂履歴は英語版に準じています。

日付	リビジョン	注
2018年12月	*	初版

Copyright © 2018, Texas Instruments Incorporated

5 Pin Configuration and Functions

DBZ Package
3-Pin SOT-23
Top View

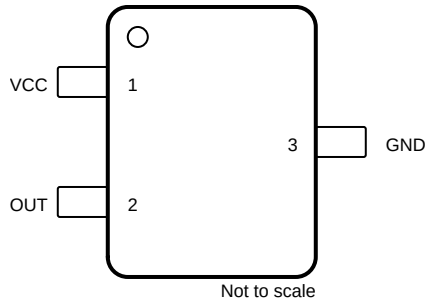

Pin Functions

PIN		TYPE	DESCRIPTION
NAME	DBZ		
GND	3	GND	Ground pin
OUT	2	Output	Hall sensor open-drain output. The open drain requires a pullup resistor.
V_{CC}	1	Power	2.5-V to 5.5-V power supply. Bypass this pin to the GND pin with a 0.1-µF (minimum) ceramic capacitor rated for V_{CC}.

6 Specifications

6.1 Absolute Maximum Ratings

over operating free-air temperature range (unless otherwise noted)[(1)]

	MIN	MAX	UNIT
Power supply voltage (VCC)	–0.3	6.0	V
Output voltage (OUT)	–0.3	6.0	V
Output current (OUT)		30	mA
Magnetic flux density, B_{MAX}		Unlimited	T
Operating junction temperature, T_J	–40	140	°C
Storage temperature, T_{stg}	–65	150	°C

(1) Stresses beyond those listed under Absolute Maximum Ratings may cause permanent damage to the device. These are stress ratings only, which do not imply functional operation of the device at these or any other conditions beyond those indicated under Recommended Operating Conditions. Exposure to absolute-maximum-rated conditions for extended periods may affect device reliability.

6.2 ESD Ratings

over operating free-air temperature range (unless otherwise noted)

			VALUE	UNIT
$V_{(ESD)}$	Electrostatic discharge	Human body model (HBM), per ANSI/ESDA/JEDEC JS-001[(1)]	±4000	V
		Charged device model (CDM), per JEDEC specification JESD22-C101[(2)]	±1000	V

(1) JEDEC document JEP155 states that 500-V HBM allows safe manufacturing with a standard ESD control process
(2) JEDEC document JEP157 states that 250-V CDM allows safe manufacturing with a standard ESD control process.

Copyright © 2018, Texas Instruments Incorporated

6.3 Recommended Operating Conditions

over operating free-air temperature range (unless otherwise noted)

		MIN	MAX	UNIT
V_{CC}	Power supply voltage range	2.5	5.5	V
V_O	Output pin voltage	0	5.5	V
I_{OUT}	Output sinking current	0	20	mA
T_A	Operating ambient temperature	–40	125	°C

6.4 Thermal Information

THERMAL METRIC[1]		DRV5021 SOT-23 (DBZ) 3 PINS	UNIT
$R_{\theta JA}$	Junction-to-ambient thermal resistance	356	°C/W
$R_{\theta JC(top)}$	Junction-to-case (top) thermal resistance	128	°C/W
$R_{\theta JB}$	Junction-to-board thermal resistance	94	°C/W
Y_{JT}	Junction-to-top characterization parameter	11.4	°C/W
Y_{JB}	Junction-to-board characterization parameter	92	°C/W

(1) For more information about traditional and new thermal metrics, see the *Semiconductor and IC Package Thermal Metrics* application report.

6.5 Electrical Characteristics

for V_{CC} = 2.5 V to 5.5 V, over operating free-air temperature range (unless otherwise noted)

PARAMETER		TEST CONDITION	MIN	TYP	MAX	UNIT
I_{CC}	Operating supply current			2.3	2.8	mA
t_{ON}	Power-on time			40	70	µs
t_d	Propagation delay time[1]	B = B_{RP} – 10 mT to B_{OP} + 10 mT in 1 µs		13	25	µs
I_{OZ}	High-impedance output leakage current	5.5 V applied to OUT, while OUT is high-impedance			100	nA
V_{OL}	Low-level output voltage	I_{OUT} = 20 mA		0.15	0.4	V
$R_{DS(on)}$	Output FET resistance	I_{OUT} = 5 mA, V_{CC} = 3.3 V		8		Ω

(1) See the *Propagation Delay* section for more information.

6.6 Magnetic Characteristics

for V_{CC} = 2.5 V to 5.5 V, over operating free-air temperature range (unless otherwise noted)

PARAMETER		TEST CONDITION	MIN	TYP	MAX	UNIT
DRV5021A1, DRV5021A2, DRV5021A3						
f_{BW}	Sensing bandwidth			30		kHz
DRV5021A1						
B_{OP}	Magnetic threshold Operate Point		1.4	2.9	4.4	mT
B_{RP}	Magnetic threshold Release Point		0.4	1.8	3.0	mT
B_{HYS}	Magnetic hysteresis: $\lvert B_{OP} – B_{RP}\rvert$		0.2	1.1	2.5	mT
DRV5021A2						
B_{OP}	Magnetic threshold Operate Point		5.5	9.2	12.5	mT
B_{RP}	Magnetic threshold Release Point		3.6	7.0	9.5	mT
B_{HYS}	Magnetic hysteresis: $\lvert B_{OP} – B_{RP}\rvert$		1.1	2.2	4.5	mT
DRV5021A3						
B_{OP}	Magnetic threshold Operate Point		9.5	17.9	22.7	mT
B_{RP}	Magnetic threshold Release Point		6.7	14.1	18.5	mT
B_{HYS}	Magnetic hysteresis: $\lvert B_{OP} – B_{RP}\rvert$		1.6	3.8	6.0	mT

Copyright © 2018, Texas Instruments Incorporated

6.7 Typical Characteristics

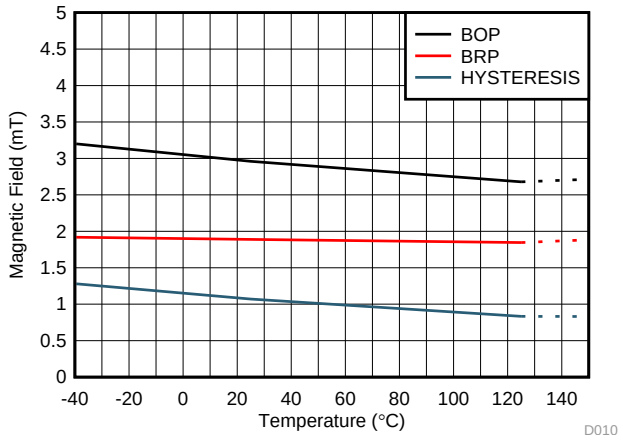

DRV5021A1, V_{CC} = 3.3 V

図 1. Magnetic Threshold vs Temperature

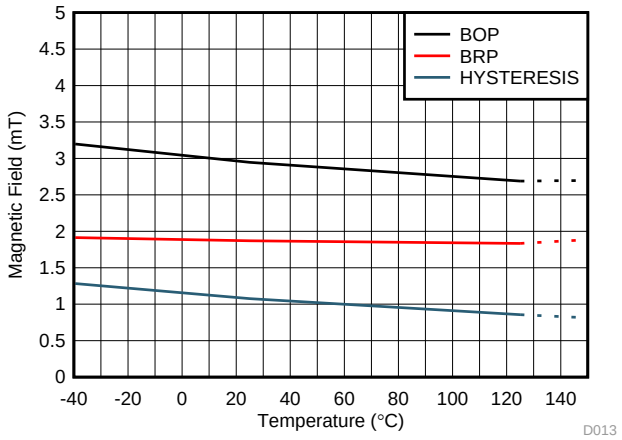

DRV5021A1, V_{CC} = 5.0 V

図 2. Magnetic Threshold vs Temperature

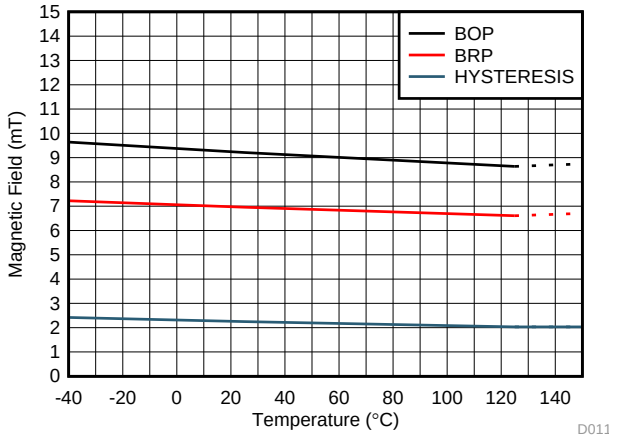

DRV5021A2, V_{CC} = 3.3 V

図 3. Magnetic Threshold vs Temperature

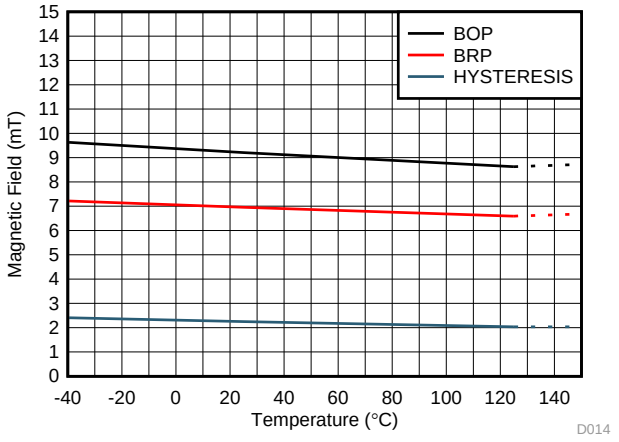

DRV5021A2, V_{CC} = 5.0 V

図 4. Magnetic Threshold vs Temperature

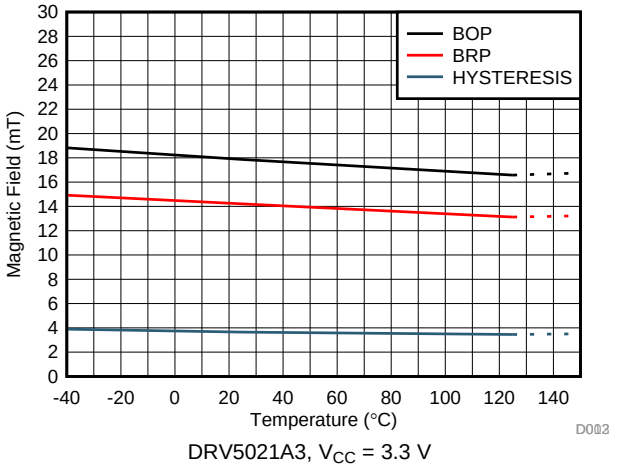

DRV5021A3, V_{CC} = 3.3 V

図 5. Magnetic Threshold vs Temperature

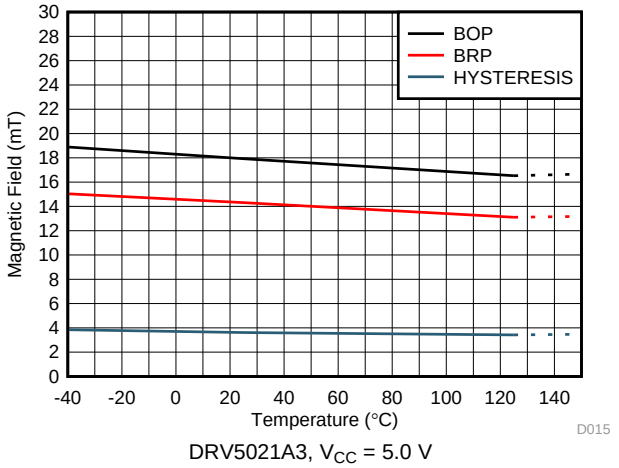

DRV5021A3, V_{CC} = 5.0 V

図 6. Magnetic Threshold vs Temperature

Typical Characteristics (continued)

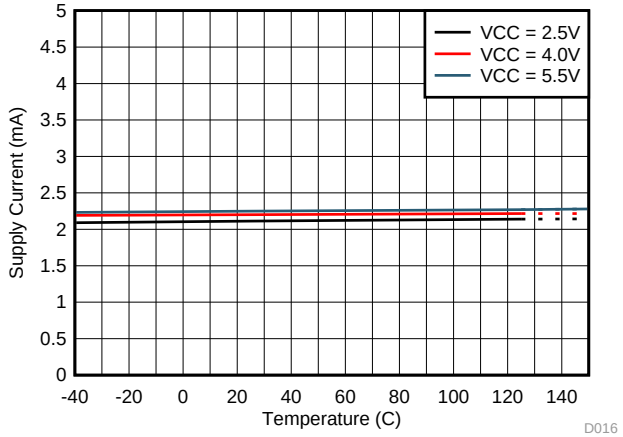

DRV5021A1

図 7. Supply Current vs Temperature

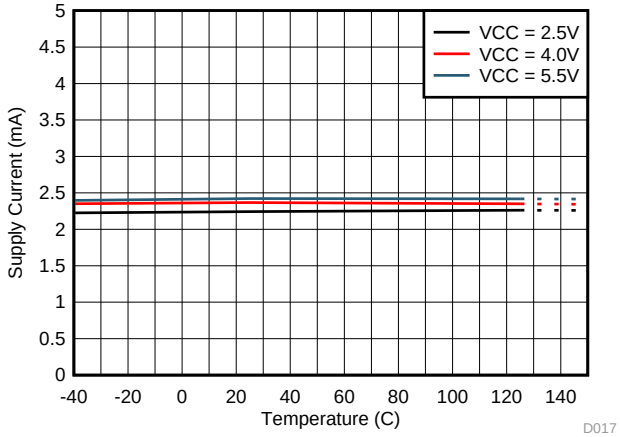

DRV5021A2

図 8. Supply Current vs Temperature

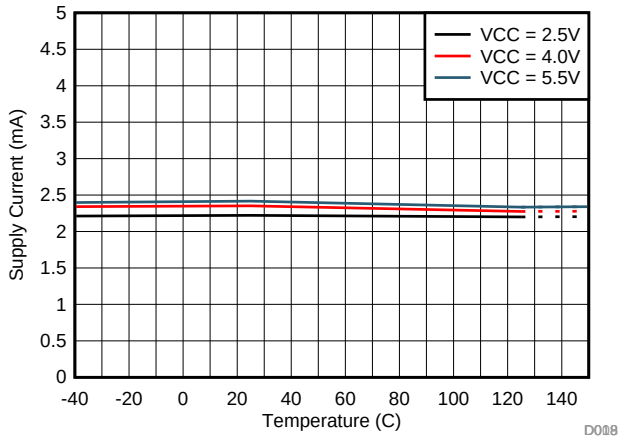

DRV5021A3

図 9. Supply Current vs Temperature

Copyright © 2018, Texas Instruments Incorporated

7 Detailed Description

7.1 Overview

The DRV5021 device is a spinning-current Hall sensor with a digital output for magnetic-sensing applications. The DRV5021 can be powered with a supply voltage between 2.5 V and 5.5 V.

The field polarity is defined as follows: a south pole near the marked side of the package is a positive magnetic field. A north pole near the marked side of the package is a negative magnetic field. The output state depends on the magnetic field perpendicular to the package.

A strong south pole near the marked side of the package causes the output to pull low. A weak south pole, the absence of a field, or any north pole makes the output high impedance. Hysteresis is included in between the operate point and the release point to prevent toggling near the magnetic threshold.

An external pullup resistor is required on the OUT pin. The OUT pin can be pulled up to V_{CC}, or to a different voltage supply. This feature allows for easier interfacing with controller circuits.

7.2 Functional Block Diagram

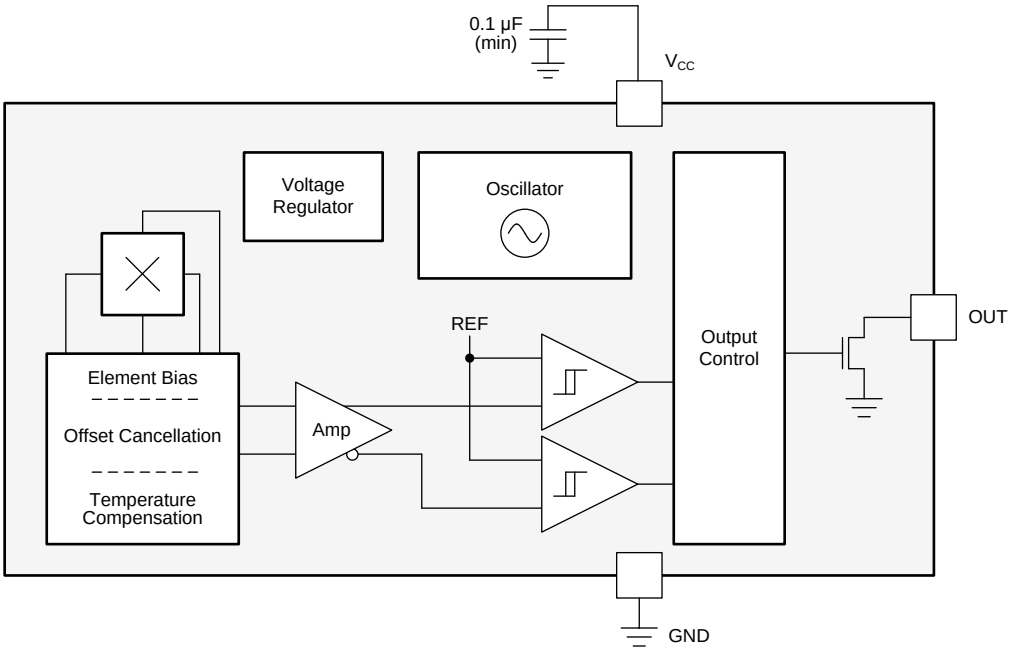

7.3 Feature Description

7.3.1 Field Direction Definition

As shown in 図 10, the DRV5021 is sensitive to the magnetic field component that is perpendicular to the top of the package.

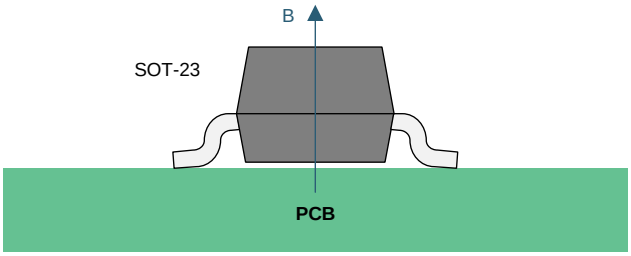

図 10. Direction of Sensitivity

Feature Description (continued)

図 11 shows that a positive magnetic field is defined as a south pole near the marked side of the package.

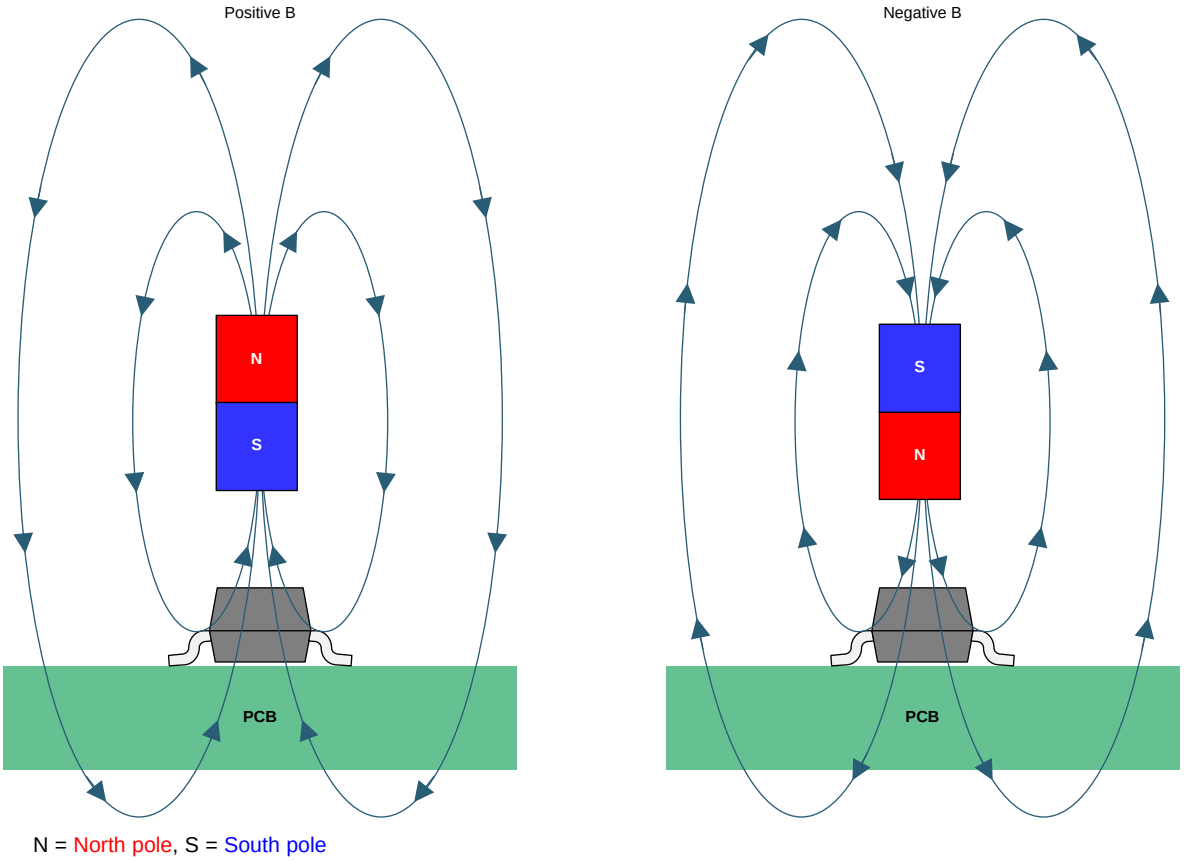

図 11. Field Direction Definition

7.3.2 Device Output

If the device is powered on with a magnetic field strength between B_{RP} and B_{OP}, then the device output is indeterminate. If the field strength is greater than B_{OP}, then the output is pulled low. If the field strength is less than B_{RP}, then the output is released.

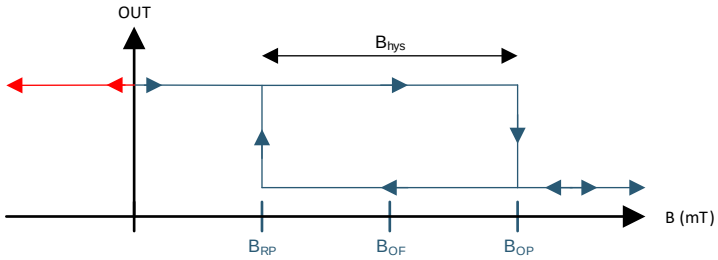

図 12. Output State

Copyright © 2018, Texas Instruments Incorporated

Feature Description (continued)

7.3.3 Power-On Time

After applying V_{CC} to the DRV5021, t_{on} must elapse before the OUT pin is valid. In case 1 (図 13) and case 2 (図 14), the output is defined assuming that magnetic field $B_{APPLIED} > B_{OP}$, and $B_{APPLIED} < B_{RP}$, respectively.

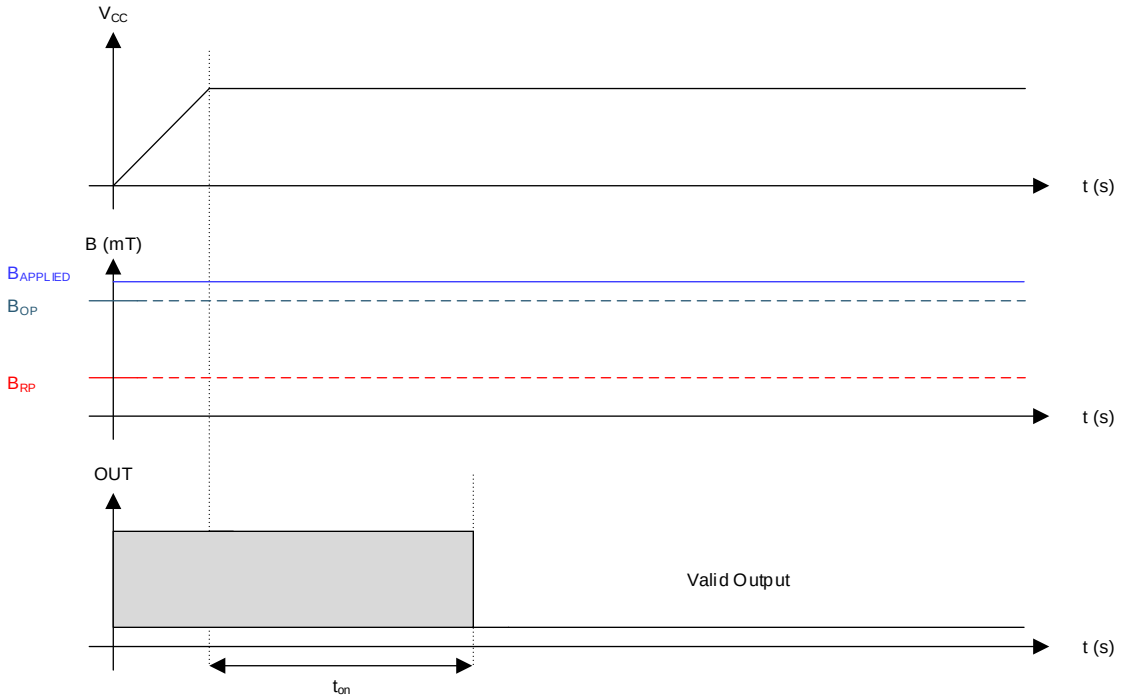

図 13. Case 1: Power On When B > B_{OP}

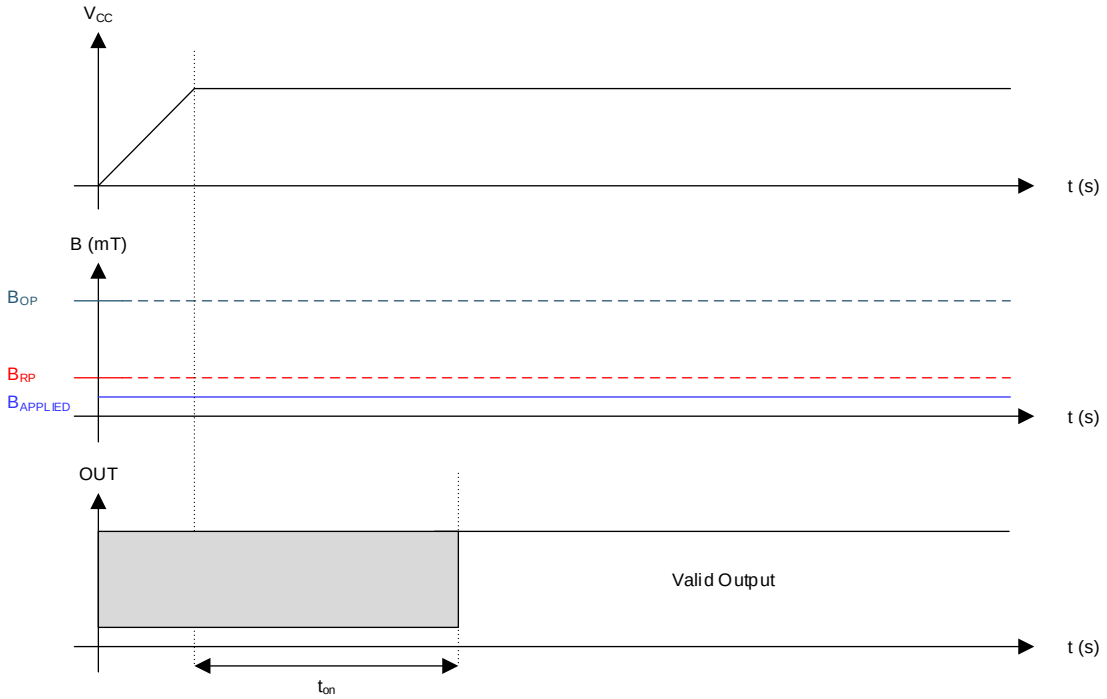

図 14. Case 2: Power On When B < B_{RP}

Feature Description (continued)

If the device is powered on with $B_{RP} < B_{APPLIED} < B_{OP}$, then the device output remains in indeterminate state until the magnetic field changes. After the change in magnetic field results in a condition that meets either $B_{OP} < B_{APPLIED}$ or $B_{RP} > B_{APPLIED}$, the output turns to valid state after t_d time elapses. Case 3 (図 15) and case 4 (図 16) show examples of this behavior.

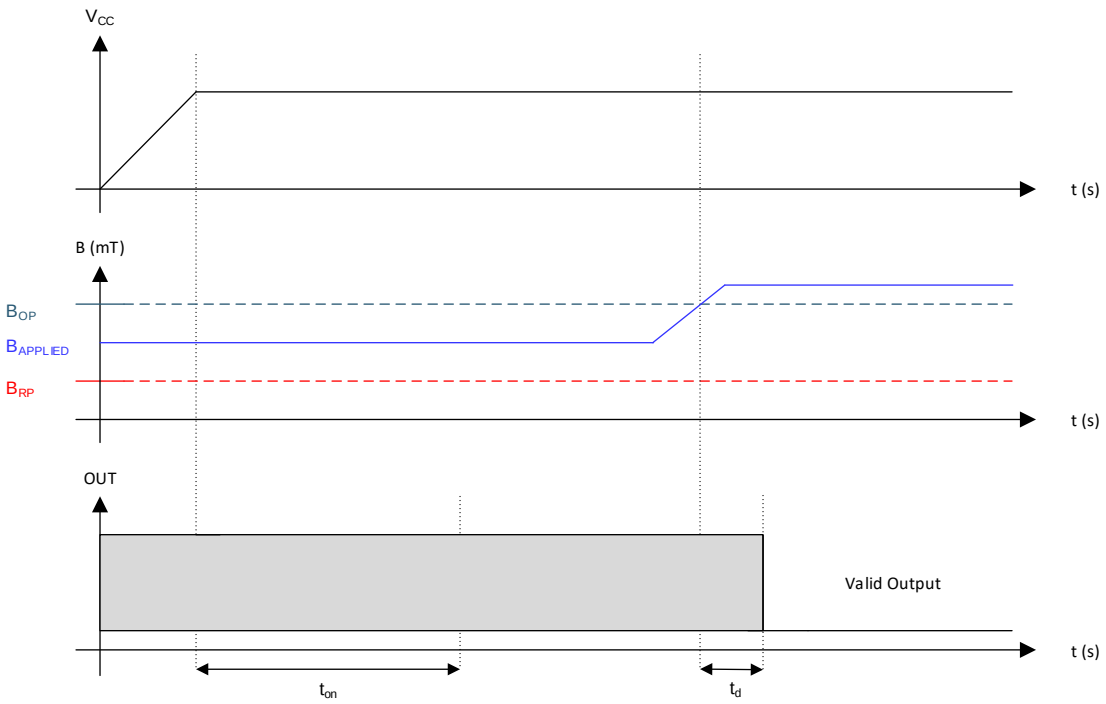

図 15. Case 3: Power On When $B_{RP} < B < B_{OP}$, Followed by $B > B_{OP}$

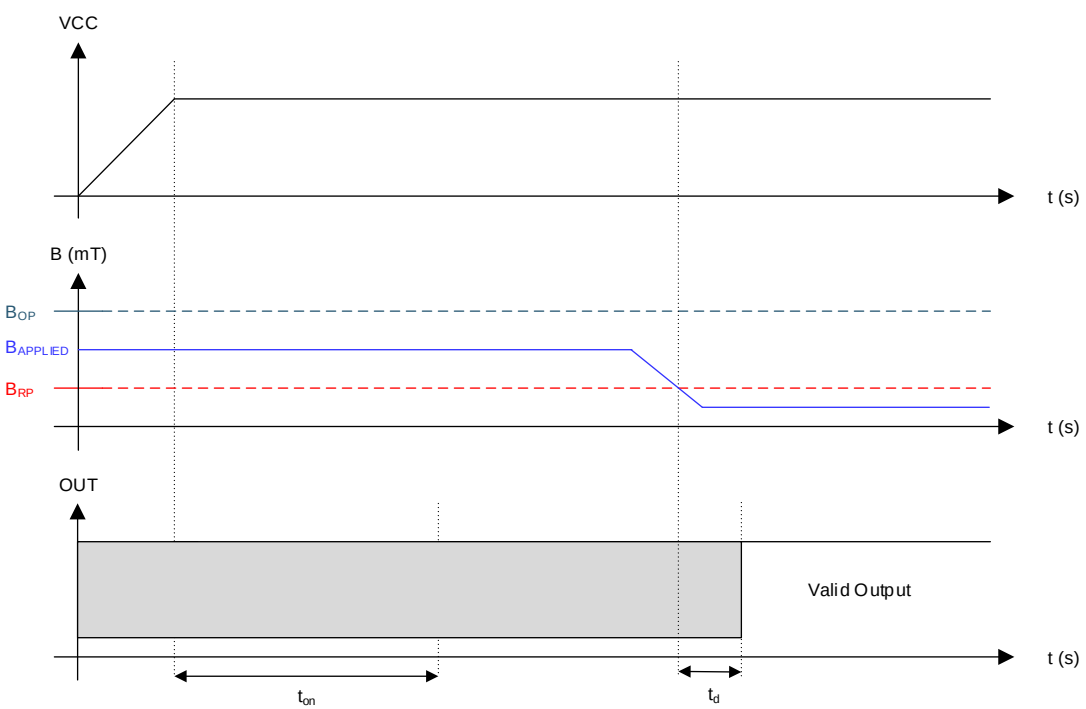

図 16. Case 4: Power On When $B_{RP} < B < B_{OP}$, Followed by $B < B_{RP}$

Copyright © 2018, Texas Instruments Incorporated

Feature Description (continued)

7.3.4 Hall Element Location

The sensing element inside the device is in the center of both packages when viewed from the top. 図 17 shows the tolerances and side-view dimensions.

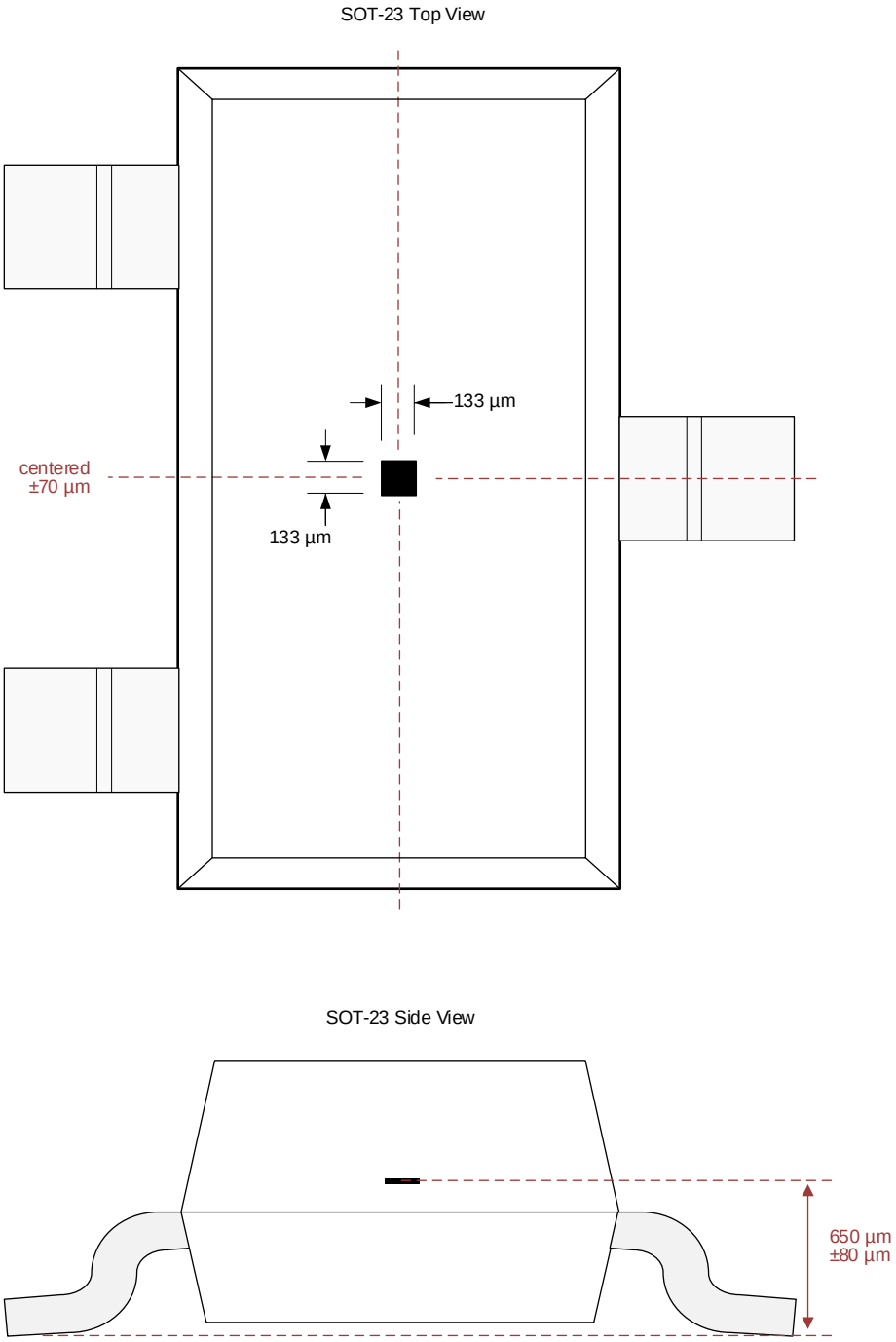

図 17. Hall Element Location

Feature Description (continued)

7.3.5 Propagation Delay

The DRV5021 samples the Hall element at a nominal sampling period of 16.67 µs to detect the presence of a magnetic north or south pole. At each sampling point, the device takes the average of the current sampled value and immediately preceding sampled value of the magnetic field. If this average value crosses the B_{OP} or B_{RP} threshold, the device output changes according to the transfer function.

図 18 shows the DRV5021 propagation delay analysis in the proximity of a magnetic south pole. The Hall element of the DRV5021 experiences an increasing magnetic field as the magnetic south pole approaches near the device. At time t_2, the average magnetic field is $(B_2 + B_1) / 2$, which is less than the B_{OP} threshold of the device. At time t_3, the actual magnetic field has crossed the B_{OP} threshold. However, the average $(B_3 + B_2) / 2$ is still less than the B_{OP} threshold. Thus, the device waits for next sample time, t_4, to start the output transition through the analog signal chain. The propagation delay, t_d, is measured as the delay from the time the magnetic field crosses the B_{OP} threshold to the time output transitions.

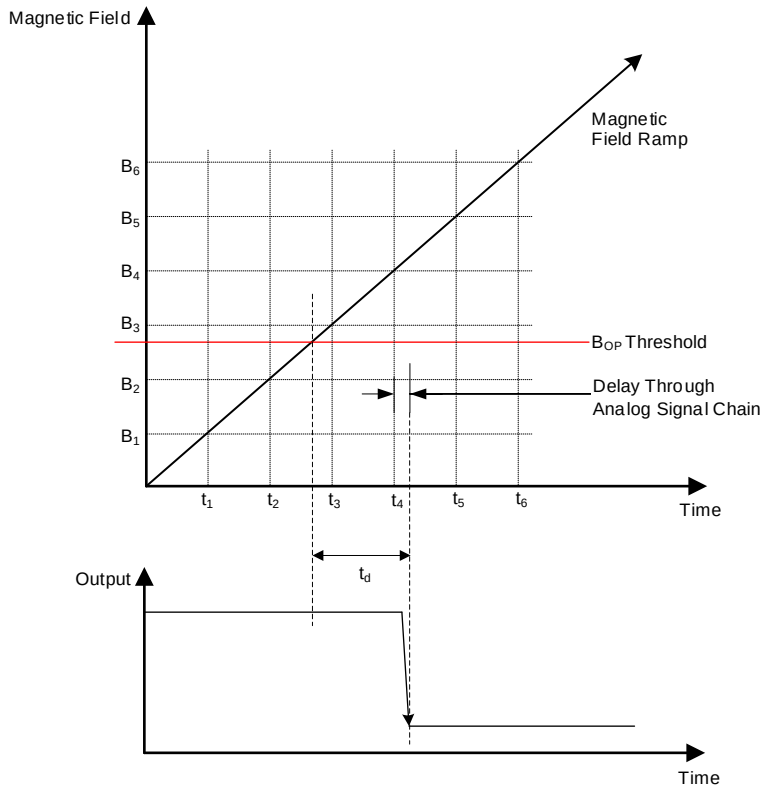

図 18. Propagation Delay

Copyright © 2018, Texas Instruments Incorporated

Feature Description (continued)

7.3.6 Output Stage

The DRV5021 output stage uses an open-drain NMOS transistor that is rated to sink up to 20 mA of current. For proper operation, calculate the value of pullup resistor R1 using 式 1.

$$\frac{V_{ref}\,max}{20\ mA} \le R1 \le \frac{V_{ref}\,min}{100\ \mu A} \tag{1}$$

The size of R1 is a tradeoff between the OUT rise time and the current when OUT is pulled low. A lower current is generally better; however, faster transitions and bandwidth require a smaller resistor for faster switching.

In addition, the value of R1 must be > 500 Ω in order to make sure that the output driver can pull the OUT pin close to GND.

注

V_{ref} is not restricted to V_{CC}. The allowable voltage range of this pin is specified in the *Recommended Operating Conditions*.

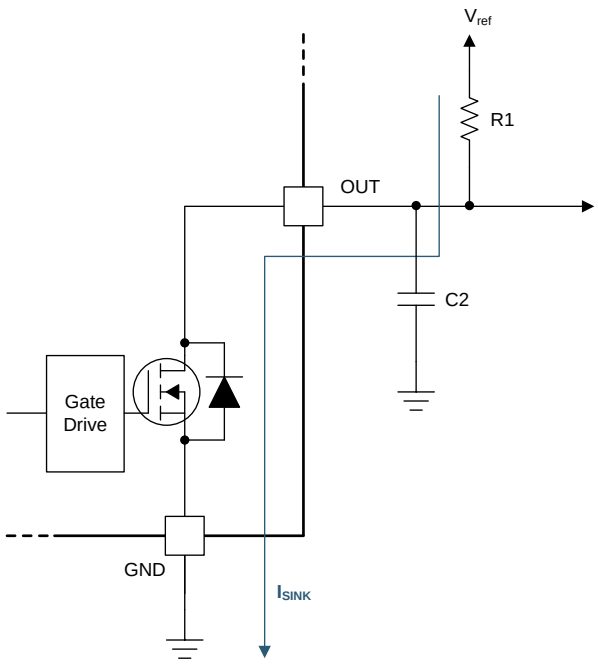

図 19. Open-Drain Output

Select a value for C2 based on the system bandwidth specifications shown in 式 2.

$$2 \times f_{BW}\ (Hz) < \frac{1}{2\pi \times R1 \times C2} \tag{2}$$

Most applications do not require this C2 filtering capacitor.

7.4 Device Functional Modes

The DRV5021 device is active only when V_{CC} is between 2.5 V and 5.5 V.

8 Application and Implementation

注

Information in the following applications sections is not part of the TI component specification, and TI does not warrant its accuracy or completeness. TI's customers are responsible for determining suitability of components for their purposes. Customers should validate and test their design implementation to confirm system functionality.

8.1 Application Information

The DRV5021 device is used in magnetic-field sensing applications.

8.2 Typical Applications

8.2.1 Proximity Sensing Circuit

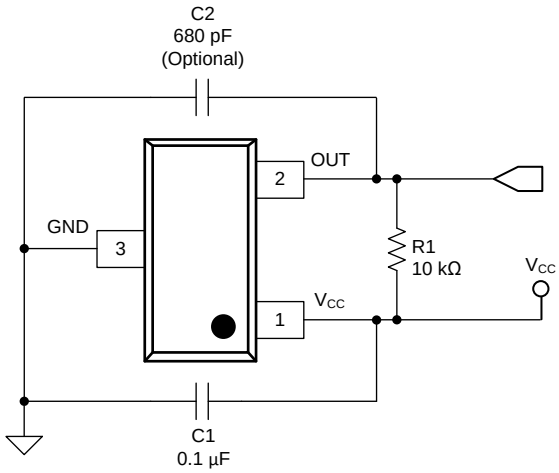

図 20. Proximity Sensing Circuit

8.2.1.1 Design Requirements

For this design example, use the parameters listed in 表 1 as the input parameters.

表 1. Design Parameters

DESIGN PARAMETER	REFERENCE	EXAMPLE VALUE
Supply voltage	V_{CC}	3.2 V to 3.4 V
System bandwidth	f_{BW}	10 kHz

8.2.1.2 Detailed Design Procedure

表 2 shows the external components needed to create this design example.

表 2. External Components

COMPONENT	CONNECTED BETWEEN		RECOMMENDED
C1	V_{CC}	GND	A 0.1-µF ceramic capacitor rated for V_{CC}
C2	OUT	GND	Optional: Place a ceramic capacitor to GND
R1	OUT	V_{CC} (1)	Requires a pullup resistor

(1) Pullup resistor may be connected to a voltage source other than V_{CC}; see the *Recommended Operating Conditions* for the valid range of the output pin voltage.

Copyright © 2018, Texas Instruments Incorporated

8.2.1.2.1 Configuration Example

In a 3.3-V system, 3.2 V ≤ V_{ref} ≤ 3.4 V. Use 式 3 to calculate the allowable range for R1.

$$\frac{V_{ref}\,\text{max}}{20\ \text{mA}} \le R1 \le \frac{V_{ref}\,\text{min}}{100\ \mu\text{A}} \tag{3}$$

For this design example, use 式 4 to calculate the allowable range of R1.

$$\frac{3.4\ \text{V}}{20\ \text{mA}} \le R1 \le \frac{3.2\ \text{V}}{100\ \mu\text{A}} \tag{4}$$

Therefore:

$$170\ \Omega \le R1 \le 32\ \text{k}\Omega \tag{5}$$

After finding the allowable range of R1 (式 5), select a value between 500 Ω and 32 kΩ for R1.

Assuming a system bandwidth of 10 kHz, use 式 6 to calculate the value of C2.

$$2 \times f_{BW}\ (\text{Hz}) < \frac{1}{2\pi \times R1 \times C2} \tag{6}$$

For this design example, use 式 7 to calculate the value of C2.

$$2 \times 10\ \text{kHz} < \frac{1}{2\pi \times R1 \times C2} \tag{7}$$

An R1 value of 10 kΩ and a C2 value less than 820 pF satisfy the requirement for a 10-kHz system bandwidth.

For R1 = 10 kΩ and C2 = 680 pF, the corner frequency for the low-pass filter is 23.4 kHz.

8.2.1.3 Application Curves

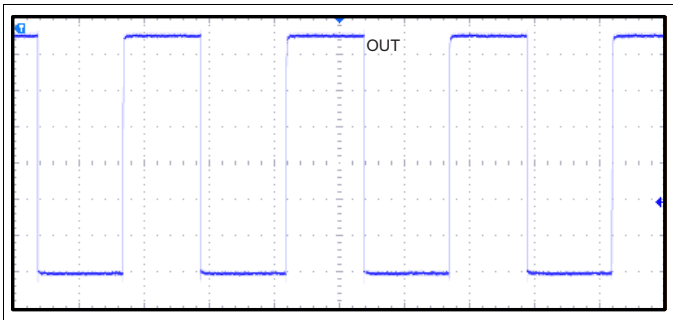

R1 = 10-kΩ pullup resistor, no C2 capacitor

図 21. 10-kHz Switching Magnetic Field

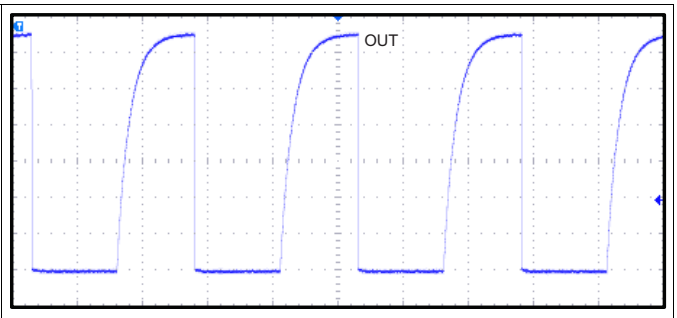

R1 = 10-kΩ pullup, C2 = 680 pF

図 22. 10-kHz Switching Magnetic Field

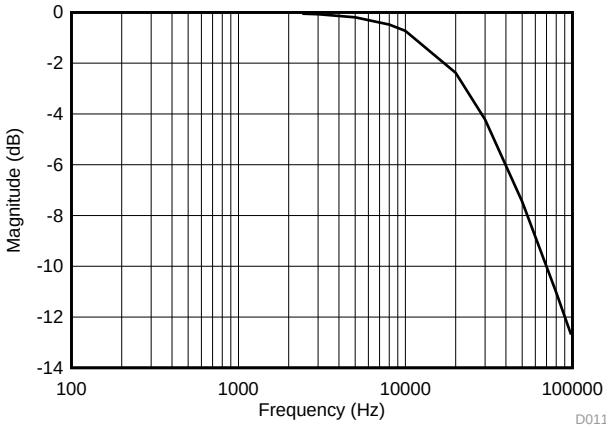

R1 = 10-kΩ pullup resistor, C2 = 680 pF

図 23. Low-Pass Filtering

8.2.2 Alternative Two-Wire Application

For systems that require a minimal wire count, connect the device output to V_{CC} through a resistor, and sense the total supplied current near the controller. Use a shunt resistor or other circuitry to sense the current.

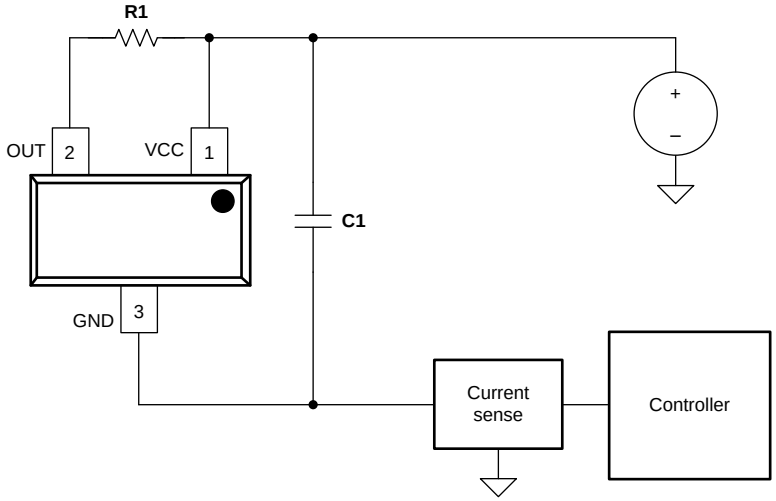

図 24. 2-Wire Application

8.2.2.1 Design Requirements

表 3 lists the related design parameters.

表 3. Design Parameters

DESIGN PARAMETER	REFERENCE	EXAMPLE VALUE
Supply voltage	V_{CC}	5 V
OUT resistor	R1	1 kΩ
Bypass capacitor	C1	0.1 µF
Current when B < B_{RP}	$I_{RELEASE}$	About 2.3 mA
Current when B > B_{OP}	$I_{OPERATE}$	About 7.3 mA

8.2.2.2 Detailed Design Procedure

When the open-drain output of the device is high-impedance, current through the path equals the I_{CC} of the device (approximately 2.3 mA).

When the output pulls low, a parallel current path is added, equal to V_{CC} / (R1 + $r_{DS(on)}$). Using 5 V and 1 kΩ, the parallel current is approximately 5 mA, making the total current approximately 7.3 mA.

Local bypass capacitor C1 must be at least 0.1 µF. Use a larger value capacitor if there is high inductance in the power line interconnect.

Copyright © 2018, Texas Instruments Incorporated

9 Power Supply Recommendations

The DRV5021 device is designed to operate from an input voltage supply (VM) range between 2.5 V and 5.5 V. A 0.1-µF (minimum) ceramic capacitor rated for V_{CC} must be placed as close to the DRV5021 device as possible.

10 Layout

10.1 Layout Guidelines

Place the bypass capacitor near the DRV5021 device for efficient power delivery with minimal inductance. Place the external pullup resistor near the microcontroller input to provide the most stable voltage at the input. Alternatively, an integrated pullup resistor within the GPIO of the microcontroller can be used.

Generally, PCB copper planes underneath the DRV5021 have no effect on magnetic flux, and do not interfere with device performance because copper is not a ferromagnetic material. However, If nearby system components contain iron or nickel, they may redirect magnetic flux in unpredictable ways.

10.2 Layout Example

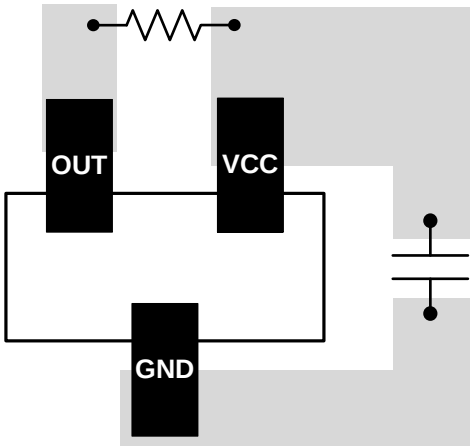

図 25. DRV5021 Layout Example

11 デバイスおよびドキュメントのサポート

11.1 ドキュメントのサポート

11.1.1 関連資料

関連資料については、以下を参照してください。

- テキサス・インスツルメンツ、*『HALL-ADAPTER-EVM』ユーザー・ガイド*
- テキサス・インスツルメンツ、*『ホール効果センサのデータシートの理解と適用』アプリケーション・レポート*

11.2 ドキュメントの更新通知を受け取る方法

ドキュメントの更新についての通知を受け取るには、ti.comのデバイス製品フォルダを開いてください。右上の隅にある「*通知を受け取る*」をクリックして登録すると、変更されたすべての製品情報に関するダイジェストを毎週受け取れます。変更の詳細については、修正されたドキュメントに含まれている改訂履歴をご覧ください。

11.3 コミュニティ・リソース

The following links connect to TI community resources. Linked contents are provided "AS IS" by the respective contributors. They do not constitute TI specifications and do not necessarily reflect TI's views; see TI's Terms of Use.

TI E2E™オンライン・コミュニティ ***TIのE2E（Engineer-to-Engineer）コミュニティ。*** エンジニア間の共同作業を促進するために開設されたものです。e2e.ti.comでは、他のエンジニアに質問し、知識を共有し、アイディアを検討して、問題解決に役立てることができます。

設計サポート ***TIの設計サポート*** 役に立つE2Eフォーラムや、設計サポート・ツールをすばやく見つけることができます。技術サポート用の連絡先情報も参照できます。

11.4 商標

E2E is a trademark of Texas Instruments.
All other trademarks are the property of their respective owners.

11.5 静電気放電に関する注意事項

すべての集積回路は、適切なESD保護方法を用いて、取扱いと保存を行うようにして下さい。

静電気放電はわずかな性能の低下から完全なデバイスの故障に至るまで、様々な損傷を与えます。高精度の集積回路は、損傷に対して敏感であり、極めてわずかなパラメータの変化により、デバイスに規定された仕様に適合しなくなる場合があります。

11.6 Glossary

SLYZ022 — *TI Glossary*.

This glossary lists and explains terms, acronyms, and definitions.

12 メカニカル、パッケージ、および注文情報

以降のページには、メカニカル、パッケージ、および注文に関する情報が記載されています。この情報は、そのデバイスについて利用可能な最新のデータです。このデータは予告なく変更されることがあり、ドキュメントが改訂される場合もあります。本データシートのブラウザ版を使用されている場合は、画面左側の説明をご覧ください。

Copyright © 2018, Texas Instruments Incorporated

PACKAGING INFORMATION

Orderable part number	Status (1)	Material type (2)	Package | Pins	Package qty | Carrier	RoHS (3)	Lead finish/ Ball material (4)	MSL rating/ Peak reflow (5)	Op temp (°C)	Part marking (6)
DRV5021A1QDBZR	Active	Production	SOT-23 (DBZ) | 3	3000 | LARGE T&R	Yes	SN	Level-1-260C-UNLIM	-40 to 125	21A1
DRV5021A1QDBZR.A	Active	Production	SOT-23 (DBZ) | 3	3000 | LARGE T&R	Yes	SN	Level-1-260C-UNLIM	-40 to 125	21A1
DRV5021A1QDBZT	Obsolete	Production	SOT-23 (DBZ) | 3	-	-	Call TI	Call TI	-40 to 125	21A1
DRV5021A2QDBZR	Active	Production	SOT-23 (DBZ) | 3	3000 | LARGE T&R	Yes	SN	Level-1-260C-UNLIM	-40 to 125	21A2
DRV5021A2QDBZR.A	Active	Production	SOT-23 (DBZ) | 3	3000 | LARGE T&R	Yes	SN	Level-1-260C-UNLIM	-40 to 125	21A2
DRV5021A2QDBZT	Obsolete	Production	SOT-23 (DBZ) | 3	-	-	Call TI	Call TI	-40 to 125	21A2
DRV5021A3QDBZR	Active	Production	SOT-23 (DBZ) | 3	3000 | LARGE T&R	Yes	SN	Level-1-260C-UNLIM	-40 to 125	21A3
DRV5021A3QDBZR.A	Active	Production	SOT-23 (DBZ) | 3	3000 | LARGE T&R	Yes	SN	Level-1-260C-UNLIM	-40 to 125	21A3
DRV5021A3QDBZT	Obsolete	Production	SOT-23 (DBZ) | 3	-	-	Call TI	Call TI	-40 to 125	21A3

(1) **Status:** For more details on status, see our product life cycle.

(2) **Material type:** When designated, preproduction parts are prototypes/experimental devices, and are not yet approved or released for full production. Testing and final process, including without limitation quality assurance, reliability performance testing, and/or process qualification, may not yet be complete, and this item is subject to further changes or possible discontinuation. If available for ordering, purchases will be subject to an additional waiver at checkout, and are intended for early internal evaluation purposes only. These items are sold without warranties of any kind.

(3) **RoHS values:** Yes, No, RoHS Exempt. See the TI RoHS Statement for additional information and value definition.

(4) **Lead finish/Ball material:** Parts may have multiple material finish options. Finish options are separated by a vertical ruled line. Lead finish/Ball material values may wrap to two lines if the finish value exceeds the maximum column width.

(5) **MSL rating/Peak reflow:** The moisture sensitivity level ratings and peak solder (reflow) temperatures. In the event that a part has multiple moisture sensitivity ratings, only the lowest level per JEDEC standards is shown. Refer to the shipping label for the actual reflow temperature that will be used to mount the part to the printed circuit board.

(6) **Part marking:** There may be an additional marking, which relates to the logo, the lot trace code information, or the environmental category of the part.

Multiple part markings will be inside parentheses. Only one part marking contained in parentheses and separated by a "~" will appear on a part. If a line is indented then it is a continuation of the previous line and the two combined represent the entire part marking for that device.

Important Information and Disclaimer: The information provided on this page represents TI's knowledge and belief as of the date that it is provided. TI bases its knowledge and belief on information provided by third parties, and makes no representation or warranty as to the accuracy of such information. Efforts are underway to better integrate information from third parties. TI has taken and continues to take reasonable steps to provide representative

and accurate information but may not have conducted destructive testing or chemical analysis on incoming materials and chemicals. TI and TI suppliers consider certain information to be proprietary, and thus CAS numbers and other limited information may not be available for release.

In no event shall TI's liability arising out of such information exceed the total purchase price of the TI part(s) at issue in this document sold by TI to Customer on an annual basis.

OTHER QUALIFIED VERSIONS OF DRV5021 :

- Automotive : DRV5021-Q1

NOTE: Qualified Version Definitions:

- Automotive - Q100 devices qualified for high-reliability automotive applications targeting zero defects

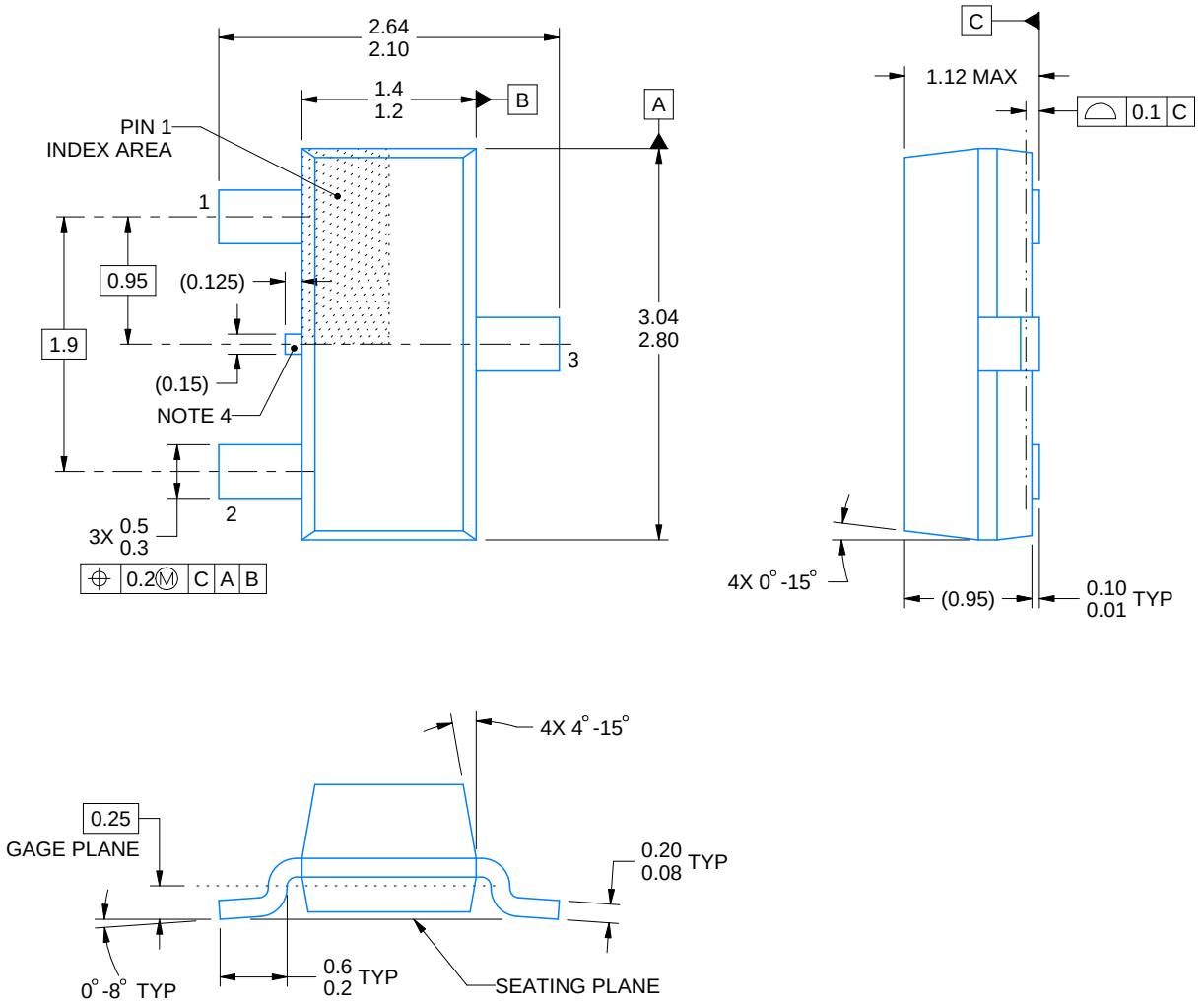

4214838/F 08/2024

NOTES:

1. All linear dimensions are in millimeters. Any dimensions in parenthesis are for reference only. Dimensioning and tolerancing per ASME Y14.5M.
2. This drawing is subject to change without notice.
3. Reference JEDEC registration TO-236, except minimum foot length.
4. Support pin may differ or may not be present.
5. Body dimensions do not include mold flash, protrusions, or gate burrs. Mold flash, protrusions, or gate burrs shall not exceed 0.25mm per side

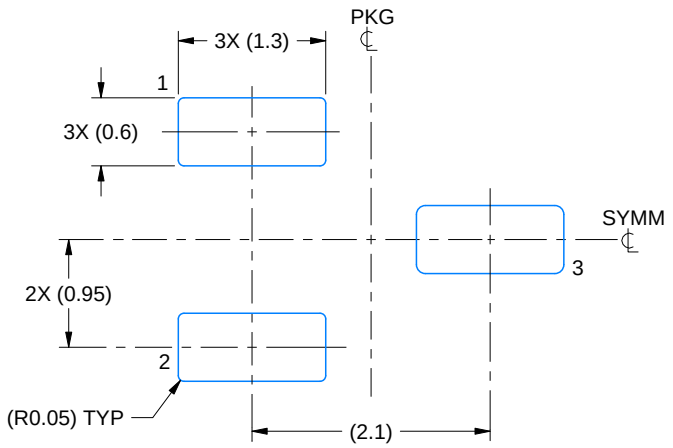

LAND PATTERN EXAMPLE
SCALE:15X

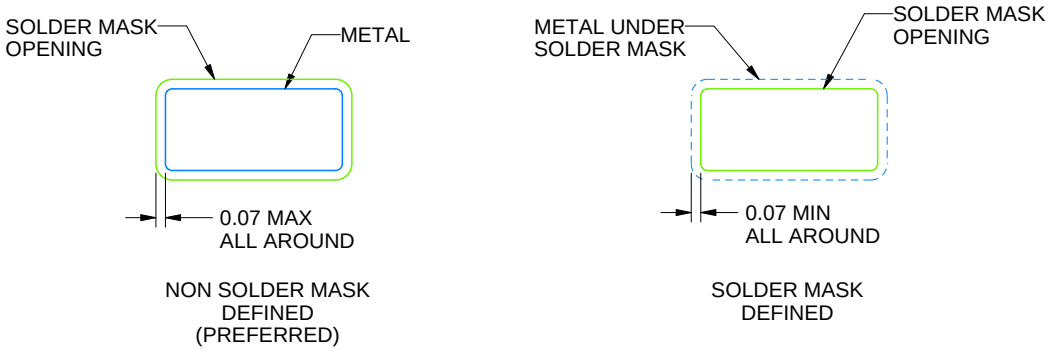

SOLDER MASK DETAILS

4214838/F 08/2024

NOTES: (continued)

5. Publication IPC-7351 may have alternate designs.
6. Solder mask tolerances between and around signal pads can vary based on board fabrication site.

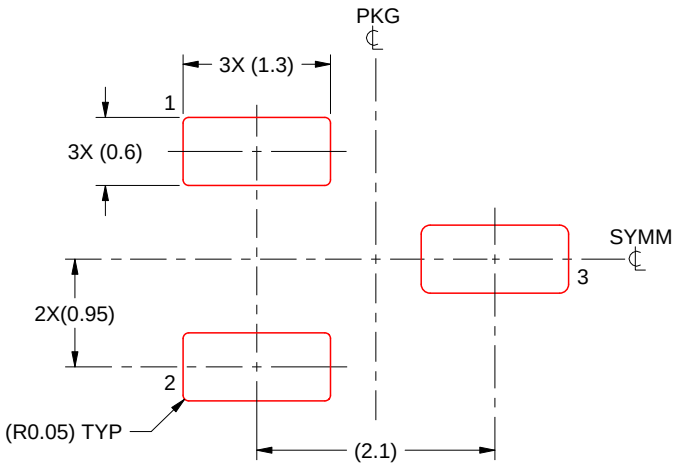

SOLDER PASTE EXAMPLE
BASED ON 0.125 THICK STENCIL
SCALE:15X

4214838/F 08/2024

NOTES: (continued)

7. Laser cutting apertures with trapezoidal walls and rounded corners may offer better paste release. IPC-7525 may have alternate design recommendations.
8. Board assembly site may have different recommendations for stencil design.

重要なお知らせと免責事項

テキサス· インスツルメンツは、技術データと信頼性データ (データシートを含みます)、設計リソース (リファレンス デザインを含みます)、アプリケーションや設計に関する各種アドバイス、Web ツール、安全性情報、その他のリソースを、欠陥が存在する可能性のある「現状のまま」提供しており、商品性および特定目的に対する適合性の黙示保証、第三者の知的財産権の非侵害保証を含むいかなる保証も、明示的または黙示的にかかわらず拒否します。

これらのリソースは、 テキサス· インスツルメンツ製品を使用する設計の経験を積んだ開発者への提供を意図したものです。(1) お客様のアプリケーションに適した テキサス· インスツルメンツ製品の選定、(2) お客様のアプリケーションの設計、検証、試験、(3) お客様のアプリケーションに該当する各種規格や、その他のあらゆる安全性、セキュリティ、規制、または他の要件への確実な適合に関する責任を、お客様のみが単独で負うものとします。

上記の各種リソースは、予告なく変更される可能性があります。これらのリソースは、リソースで説明されている テキサス· インスツルメンツ製品を使用するアプリケーションの開発の目的でのみ、 テキサス· インスツルメンツはその使用をお客様に許諾します。これらのリソースに関して、他の目的で複製することや掲載することは禁止されています。 テキサス· インスツルメンツや第三者の知的財産権のライセンスが付与されている訳ではありません。お客様は、これらのリソースを自身で使用した結果発生するあらゆる申し立て、損害、費用、損失、責任について、 テキサス· インスツルメンツおよびその代理人を完全に補償するものとし、 テキサス· インスツルメンツは一切の責任を拒否します。

テキサス· インスツルメンツの製品は、 テキサス· インスツルメンツの販売条件、または ti.com やかかる テキサス· インスツルメンツ製品の関連資料などのいずれかを通じて提供する適用可能な条項の下で提供されています。 テキサス· インスツルメンツがこれらのリソースを提供することは、適用される テキサス· インスツルメンツの保証または他の保証の放棄の拡大や変更を意味するものではありません。

お客様がいかなる追加条項または代替条項を提案した場合でも、 テキサス· インスツルメンツはそれらに異議を唱え、拒否します。

郵送先住所：Texas Instruments, Post Office Box 655303, Dallas, Texas 75265
Copyright © 2025, Texas Instruments Incorporated