DLPC23x-Q1 車載用デジタル マイクロミラー デバイス コントローラ

1 特長

- 車載アプリケーション認定済み
- 以下の結果で AEC-Q100 認定済み:
  - デバイス温度グレード 2:–40℃～105℃の動作時周囲温度
  - デバイス HBM ESD 分類レベル 2
  - デバイス CDM ESD 分類レベル C4B
- 以下をサポートする DMD ディスプレイ コントローラ:
  - DLP553x-Q1 および DLP462x-Q1 車載用車内ディスプレイおよび車外照明チップセット
- ビデオ処理
  - DMD 解像度に合わせて入力画像をスケーリング
  - ベゼル調整により、画像の垂直位置を ±50%、水平位置を ±10% まで調整できるため、機械的な位置揃えの必要性を低減 (HUD)
  - 解像度の低いビデオ入力に対応して、ピクセルの 2 倍または 4 倍化処理をサポート
  - ガンマ補正
- エラー訂正 (ECC) 付きの組み込み プロセッサ
  - オンチップの診断およびセルフ テスト機能
  - 温度監視、デバイス インターフェイス監視、およびフォトダイオード監視を含むシステム診断機能
  - 無段階調光の管理機能を内蔵
  - 構成可能な GPIO
- 外部 RAM 不要、画像処理用の SRAM を内蔵
- 600MHz SubLVDS DMD インターフェイスによる低い消費電力と放射妨害
- 拡散スペクトラムのクロック処理による EMI 低減
- ビデオ入力インターフェイス
  - シングル OpenLDI (FPD-Link I) ポートで最高 110MHz
  - 最高 110MHz の 24 ビット RISC パラレル インターフェイス
- 構成可能なホスト制御インターフェイス
  - 10MHz のシリアル ペリフェラル インターフェイス (SPI)
  - I^2C (400kHz)
  - ホスト IRQ 信号により重要なシステム エラーについてリアルタイムのフィードバックを提供
- TPS99000-Q1 システム管理および照明コントローラとのインターフェイス

2 アプリケーション

- 広視野の拡張現実
  ヘッドアップ・ディスプレイ (HUD)
- デジタル・クラスタ、ナビゲーション、インフォテインメントのフロント・ガラス・ディスプレイ
- 高解像度ヘッドライト

3 概要

車載アプリケーション用 DLPC23x-Q1 デジタル マイクロミラー ディスプレイ (DMD) コントローラは、HUD など車内用アプリケーションおよび高解像度ヘッドライトなど車外用アプリケーション向けのチップセットで使用されます。DLP553x-Q1 チップセットには 0.55 インチ DMD、DLP4621-Q1 チップセットには 0.46 インチ DMD が含まれます。どちらのチップセットにも TPS99000-Q1 システム管理および照明コントローラが含まれています。DLPC23x-Q1 には プロセッサが組み込まれており、このプロセッサにはエラー コード訂正 (SECDED ECC) が搭載され、ホスト制御およびリアルタイムのフィードバック、オンチップ診断、およびシステム監視機能が使用可能です。オンチップ SRAM が搭載されているため、外部の DRAM が必要ありません。TPS99000-Q1 と組み合わせることで、DLPC23x-Q1 は HUD アプリケーションにおいて 5000:1 を超える高いダイナミック レンジの調光をサポートします。SubLVDS 600MHz DMD インターフェイスによって高い DMD リフレッシュ レートが可能になり、シームレスで鮮鋭なデジタル画像を生成しながら、放射 EMI が低減されます。

DLP テクノロジーをベースとする車載認定プロジェクタの設計と製造を支援するために、多数の確立された光学モジュール メーカーと設計業者を活用して、お客様の設計をサポートできます。

製品情報

部品番号	パッケージ(1)	パッケージ サイズ
DLPC230-Q1	ZDQ (BGA、324)	23.00mm × 23.00mm
DLPC231-Q1	ZEK (nfBGA、324)	15.00mm × 15.00mm

(1) 詳細については、「Mechanical, Packaging, and Orderable Information」セクションを参照してください。

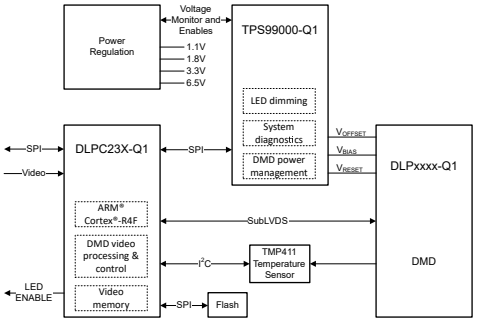

DLP553x-Q1 または DLP4621-Q1 DLP® チップセットのシステム ブロック図

このリソースの元の言語は英語です。翻訳は概要を便宜的に提供するもので、自動化ツール (機械翻訳) を使用していることがあり、TI では翻訳の正確性および妥当性につきましては一切保証いたしません。実際の設計などの前には、ti.com で必ず最新の英語版をご参照くださいますようお願いいたします。

Table of Contents

1 特長 ... 1
2 アプリケーション ... 1
3 概要 ... 1
4 Pin Configuration and Functions ... 3
5 Specifications ... 15
5.1 Absolute Maximum Ratings ... 15
5.2 ESD Ratings ... 15
5.3 Recommended Operating Conditions ... 16
5.4 Thermal Information ... 16
5.5 Electrical Characteristics ... 17
5.6 Electrical Characteristics for Fixed Voltage I/O ... 18
5.7 DMD High-Speed SubLVDS Electrical Characteristics ... 19
5.8 DMD Low-Speed SubLVDS Electrical Characteristics ... 20
5.9 OpenLDI LVDS Electrical Characteristics ... 21
5.10 Power Dissipation Characterisics ... 21
5.11 System Oscillators Timing Requirements ... 21
5.12 Power Supply and Reset Timing Requirements ... 22
5.13 Parallel Interface General Timing Requirements ... 23
5.14 OpenLDI Interface General Timing Requirements ... 23
5.15 Parallel/OpenLDI Interface Frame Timing Requirements ... 25
5.16 Host/Diagnostic Port SPI Interface Timing Requirements ... 26
5.17 Host/Diagnostic Port I^2C Interface Timing Requirements ... 26
5.18 Flash Interface Timing Requirements ... 27
5.19 TPS99000-Q1 SPI Interface Timing Requirements ... 29
5.20 TPS99000-Q1 AD3 Interface Timing Requirements ... 31
5.21 DLPC23x-Q1 I^2C Port Interface Timing Requirements ... 33
5.22 Chipset Component Usage Specification ... 33
6 Parameter Measurement Information ... 34
6.1 HOST_IRQ Usage Model ... 34
6.2 Input Source ... 34
7 Detailed Description ... 37
7.1 Overview ... 37
7.2 Functional Block Diagram ... 37
7.3 Feature Description ... 38
7.4 Device Functional Modes ... 50
8 Application and Implementation ... 51
8.1 Application Information ... 51
8.2 Typical Application ... 51
8.3 Power Supply Recommendations ... 54
8.4 Layout ... 56
9 Device and Documentation Support ... 67
9.1 Device Support ... 67
9.2 Trademarks ... 69
9.3 静電気放電に関する注意事項 ... 69
9.4 用語集 ... 69
10 Revision History ... 69
11 Mechanical, Packaging, and Orderable Information ... 70

Copyright © 2024 Texas Instruments Incorporated

4 Pin Configuration and Functions

	1	2	3	4	5	6	7	8	9	10	11	12	13	14	15	16	17	18	19	20	21	22
A	GND18A_LVDS	DMD_HS1_WDATA0_N	DMD_HS1_WDATA1_N	DMD_HS1_WDATA2_N	DMD_HS1_WDATA3_N	DMD_HS1_CLK_N	DMD_HS1_WDATA4_N	DMD_HS1_WDATA5_N	DMD_HS1_WDATA6_N	DMD_HS1_WDATA7_N	DMD_LS0_WDATA_N	DMD_LS0_CLK_N	DMD_HS0_WDATA7_N	DMD_HS0_WDATA6_N	DMD_HS0_WDATA5_N	DMD_HS0_WDATA4_N	DMD_HS0_CLK_N	DMD_HS0_WDATA3_N	DMD_HS0_WDATA2_N	DMD_HS0_WDATA1_N	DMD_HS0_WDATA0_N	GND18A_LVDS
B	VCC18A_LVDS	DMD_HS1_WDATA0_P	DMD_HS1_WDATA1_P	DMD_HS1_WDATA2_P	DMD_HS1_WDATA3_P	DMD_HS1_CLK_P	DMD_HS1_WDATA4_P	DMD_HS1_WDATA5_P	DMD_HS1_WDATA6_P	DMD_HS1_WDATA7_P	DMD_LS0_WDATA_P	DMD_LS0_CLK_P	DMD_HS0_WDATA7_P	DMD_HS0_WDATA6_P	DMD_HS0_WDATA5_P	DMD_HS0_WDATA4_P	DMD_HS0_CLK_P	DMD_HS0_WDATA3_P	DMD_HS0_WDATA2_P	DMD_HS0_WDATA1_P	DMD_HS0_WDATA0_P	VCC18A_LVDS
C	VCC18A_LVDS	GND18A_LVDS	GND18A_LVDS	GND18A_LVDS	GND18A_LVDS	GND18A_LVDS	GND18A_LVDS	DMD_LS1_RDATA	DMD_LS0_RDATA	DMD_LS0_WDATA	DMD_LS0_CLK	GND11AD_PLLD	GND11AD_PLLM	GNDIOLA_COSC	VCC3IO_COSC	GND18A_LVDS	GND18A_LVDS	GND18A_LVDS	GND18A_LVDS	GND18A_LVDS	GND18A_LVDS	VCC18A_LVDS
D	PMIC_SPI_DOUT	VCC18A_LVDS	VCC18A_LVDS	VCC18A_LVDS	VCC18A_LVDS	RPI_1	VCC18A_LVDS	GND18A_LVDS	RPI_LS	VCC18IO	DMD_DEN_ARSTZ	VCC11AD_PLLD	VCC11AD_PLLM	PLL_REFCLK_O	PLL_REFCLK_I	OSC_BYPASS	RPI_0	VCC18A_LVDS	VCC18A_LVDS	VCC18A_LVDS	VCC18A_LVDS	GPIO_31
E	PMIC_SPI_CLK	PMIC_SPI_CSZ_0	PMIC_PARKZ	VCC11A_DDI_1															VCC11A_DDI_0	VCC18A_LVDS	GPIO_30	GPIO_29
F	PMIC_SPI_DIN	PMIC_LEDSEL_0	RESETZ	VCC11A_DDI_1															VCC11A_DDI_0	GPIO_28	GPIO_27	GPIO_26
G	PMIC_LEDSEL_1	PMIC_LEDSEL_2	PMIC_INTZ	VCCK															VCC3IO-2	JTAGTDO3	JTAGTMS1	JTAGTCK
H	PMIC_LEDSEL_3	PMIC_AD3_CLK	HWTEST_EN	VCC3IO_MVGP															VCCK	JTAGTDO2	VSYNC	HSYNC
J	PMIC_AD3_MOSI	PMIC_AD3_MISO	GPIO_00	VCC3IO					GND	GND	VCCK	GND	GND	GND					VCCK	JTAGTDO1	PDATA_23	PDATA_22
K	GPIO_01	GPIO_02	GPIO_03	VCC3IO					GND	GND	GND	GND	GND	GND					VCC3IO_INTF	JTAGTDI	PDATA_21	PDATA_20
L	GPIO_04	GPIO_05	GPIO_06	VCCK					GND	GND	GND	GND	GND	GND					VCC3IO_INTF	JTAGTRSTZ	PDATA_19	PDATA_18
M	GPIO_07	GPIO_08	GPIO_09	VCC3IO					GND	GND	GND	GND	GND	GND					VCC3IO_INTF	JTAGTMS3	PDATA_17	PDATA_16
N	GPIO_10	GPIO_11	GPIO_12	VCC3IO					GND	GND	GND	GND	GND	GND					VCCK	JTAGTMS2	PDATA_14	PDATA_15
P	GPIO_13	GPIO_14	GPIO_15	VCC3IO					GND	GND	GND	GND	GND	GND					VCCK	HOST_IIC_SDA	DATEN	PDATA_13
R	GPIO_16	GPIO_17	GPIO_18	HOST_IF_SEL															VCC3IO_INTF	HOST_IIC_SCL	PDATA_11	PCLK
T	GPIO_19	GPIO_20	GPIO_21	VCCK															VCC3IO_INTF	HOST_IRQ	PDATA_9	PDATA_12
U	GPIO_22	GPIO_23	GPIO_24	VCCK															VCCK	HOST_SPI_DOUT	PDATA_7	PDATA_10
V	HOST_SPI_MODE	FLSH_SPI_DIO_0	GPIO_25	VCC3IO_FLSH															VCCK	HOST_SPI_DIN	PDATA_5	PDATA_8
W	FLSH_SPI_CLK	FLSH_SPI_DIO_1	FLSH_SPI_DIO_3	VCC3IO	VCC3IO	VCCK	EFUSE_VDDQ	VCCK	VCC33A_LVDS	VCCK	VCC11A_LVDS	VCC11A_LVDS	VCC33A_LVDS	GND33A_LVDS	VCC33A_LVDS	VCCK	VCC11A_LVDS	VCC11A_LVDS	VCC33A_LVDS	HOST_SPI_CSZ	PDATA_3	PDATA_6
Y	FLSH_SPI_CSZ	FLSH_SPI_DIO_2	GND	TSTPT_0	TSTPT_2	TSTPT_4	TSTPT_6	EFUSE_POR33	VCC33A_LVDS	GND11A_LVDS	GND11A_LVDS	GND11A_LVDS	VCC33A_LVDS	GND33A_LVDS	VCC33A_LVDS	GND11A_LVDS	GND11A_LVDS	GND11A_LVDS	VCC33A_LVDS	HOST_SPI_CLK	PDATA_2	PDATA_4
AA	GND	GND	RTPPUB_ENZ	TSTPT_1	TSTPT_3	TSTPT_5	TSTPT_7	GND33A_LVDS	L1_DATA0_N	L1_DATA1_N	L1_CLK_N	L1_DATA2_N	L1_DATA3_N	GND33A_LVDS	L2_DATA0_N	L2_DATA1_N	L2_CLK_N	L2_DATA2_N	L2_DATA3_N	GND33A_LVDS	PDATA_0	PDATA_1
AB	GND	GND	CRCZ_CHKSM_SEL	MSTR_SCL	MSTR_SDA	ETM_TRACECLK	ETM_TRACECTL	GND33A_LVDS	L1_DATA0_P	L1_DATA1_P	L1_CLK_P	L1_DATA2_P	L1_DATA3_P	GND33A_LVDS	L2_DATA0_P	L2_DATA1_P	L2_CLK_P	L2_DATA2_P	L2_DATA3_P	GND33A_LVDS	GND33A_LVDS	GND

Note that there is one VCCK power ball located in the thermal ball array.

図 4-1. DLPC230 ZDQ Package
324-Pin BGA
Top View

	A	B	C	D	E	F	G	H	J	K	L	M	N	P	R	T	U	V	
18	GND18A_LVDS	VCC18A_LVDS	DMD_HS0_WDATA1_N	DMD_HS0_WDATA0_N	GPIO_28	JTAGTDO2	JTAGTMS3	HSYNC	VSYNC	PDATA_17	PDATA_14	PCLK	PDATA_9	PDATA_8	PDATA_6	PDATA_4	PDATA_2	GND	18
17	DMD_HS0_WDATA2_N	DMD_HS0_WDATA2_P	DMD_HS0_WDATA1_P	DMD_HS0_WDATA0_P	GPIO_29	JTAGTDO3	JTAGTDI	JTAGTCK	PDATA_21	PDATA_18	PDATA_15	DATEN	PDATA_12	PDATA_7	PDATA_5	PDATA_3	PDATA_1	PDATA_0	17
16	DMD_HS0_WDATA3_N	DMD_HS0_WDATA3_P	GND18A_LVDS	VCC18A_LVDS	GPIO_30	GPIO_26	JTAGTRSTZ	JTAGTMS1	PDATA_22	PDATA_19	PDATA_16	PDATA_13	PDATA_11	PDATA_10	HOST_SPI_DIN	HOST_SPI_CSZ	HOST_SPI_CLK	VCC33A_LVDS	16
15	DMD_HS0_CLK_N	DMD_HS0_CLK_P	VCC18A_LVDS	RPI_0	GPIO_31	GPIO_27	JTAGTDO1	JTAGTMS2	PDATA_23	PDATA_20	HOST_IIC_SDA	HOST_IIC_SCL	HOST_IRQ	HOST_SPI_DOUT	VCC33A_LVDS	GND33A_LVDS	GND33A_LVDS	GND33A_LVDS	15
14	DMD_HS0_WDATA4_N	DMD_HS0_WDATA4_P	GND18A_LVDS	VCC18A_LVDS	GND18A_LVDS	VCC3IO-2	VCC3IO-2	VCC3IO_INTF	VCC3IO_INTF	GND	VCC3IO_INTF	VCC3IO_INTF	GND	VCC11A_LVDS	GND33A_LVDS	VCC33A_LVDS	L2_DATA3_N	L2_DATA3_P	14
13	DMD_HS0_WDATA5_N	DMD_HS0_WDATA5_P	OSC_BYPASS	PLL_REFCLK_O	VCC18A_LVDS	VCC11A_DDI_0	VCC11A_DDI_0	VCCK	GND	VCCK	GND	VCCK	GND	VCC11A_LVDS	VCC33A_LVDS	GND33A_LVDS	L2_DATA2_N	L2_DATA2_P	13
12	DMD_HS0_WDATA6_N	DMD_HS0_WDATA6_P	GNDIOLA_COSC	PLL_REFCLK_I	GND18A_LVDS	VCC18A_LVDS	GND	GND	GND	GND	GND	GND	GND	VCC11A_LVDS	GND33A_LVDS	VCC33A_LVDS	L2_CLK_N	L2_CLK_P	12
11	DMD_HS0_WDATA7_N	DMD_HS0_WDATA7_P	GND11AD_PLLM	VCC11AD_PLLM	VCC3IO_COSC	VCCK	GND	GND	GND	GND	GND	GND	VCCK	VCC11A_LVDS	VCC33A_LVDS	GND33A_LVDS	L2_DATA1_N	L2_DATA1_P	11
10	DMD_LS0_CLK_N	DMD_LS0_CLK_P	VCC11AD_PLLD	GND11AD_PLLD	GND18A_LVDS	VCC18A_LVDS	GND	GND	GND	GND	GND	GND	VCC11A_LVDS	EFUSE_POR33	ETM_TRACECLK	VCC33A_LVDS	L2_DATA0_N	L2_DATA0_P	10
9	DMD_LS0_WDATA_N	DMD_LS0_WDATA_P	DMD_LS0_CLK	DMD_DEN_ARSTZ	VCC18IO	VCCK	GND	GND	GND	GND	GND	GND	VCCK	EFUSE_VDDQ	ETM_TRACECTL	GND33A_LVDS	GND33A_LVDS	GND33A_LVDS	9
8	DMD_HS1_WDATA7_N	DMD_HS1_WDATA7_P	DMD_LS1_RDATA	DMD_LS0_WDATA	GND18A_LVDS	VCC18A_LVDS	GND	GND	GND	GND	GND	GND	VCCK	VCC3IO	TSTPT_5	VCC33A_LVDS	L1_DATA3_N	L1_DATA3_P	8
7	DMD_HS1_WDATA6_N	DMD_HS1_WDATA6_P	DMD_LS0_RDATA	RPI_LS	VCC11A_DDI_1	VCC18A_LVDS	GND	GND	GND	GND	GND	GND	VCC3IO	TSTPT_7	TSTPT_3	MSTR_SDA	L1_DATA2_N	L1_DATA2_P	7
6	DMD_HS1_WDATA5_N	DMD_HS1_WDATA5_P	VCC18A_LVDS	GND18A_LVDS	VCC11A_DDI_1	GND18A_LVDS	VCCK	GND	VCCK	VCC3IO	VCCK	VCC3IO	VCCK	TSTPT_6	MSTR_SCL	GND33A_LVDS	L1_CLK_N	L1_CLK_P	6
5	DMD_HS1_WDATA4_N	DMD_HS1_WDATA4_P	GND18A_LVDS	VCC18A_LVDS	PMIC_SPI_DOUT	PMIC_SPI_CLK	VCC3IO_MVGP	VCC3IO_MVGP	HWTEST_EN	GPIO_12	VCC3IO	GPIO_24	VCC3IO_FLSH	VCC3IO_FLSH	TSTPT_2	GND33A_LVDS	L1_DATA1_N	L1_DATA1_P	5
4	DMD_HS1_CLK_N	DMD_HS1_CLK_P	VCC18A_LVDS	RPI_1	PMIC_PARKZ	PMIC_LEDSEL_0	PMIC_SPI_CSZ_0	GPIO_00	GPIO_07	GPIO_11	GPIO_16	GPIO_20	GPIO_23	TSTPT_4	TSTPT_1	VCC33A_LVDS	L1_DATA0_N	L1_DATA0_P	4
3	DMD_HS1_WDATA3_N	DMD_HS1_WDATA3_P	GND18A_LVDS	VCC18A_LVDS	PMIC_SPI_DIN	RESETZ	PMIC_AD3_MOSI	GPIO_04	GPIO_06	GPIO_10	GPIO_15	GPIO_19	GPIO_22	GPIO_25	TSTPT_0	VCC33A_LVDS	GND33A_LVDS	GND33A_LVDS	3
2	DMD_HS1_WDATA2_N	DMD_HS1_WDATA2_P	DMD_HS1_WDATA1_P	DMD_HS1_WDATA0_P	PMIC_INTZ	PMIC_LEDSEL_2	PMIC_AD3_MISO	GPIO_05	GPIO_03	GPIO_09	GPIO_14	GPIO_18	GPIO_21	HOST_SPI_MODE	FLSH_SPI_DIO_1	FLSH_SPI_DIO_3	RTPPUB_ENZ	CRCZ_CHKSM_SEL	2
1	GND18A_LVDS	VCC18A_LVDS	DMD_HS1_WDATA1_N	DMD_HS1_WDATA0_N	PMIC_LEDSEL_1	PMIC_LEDSEL_3	PMIC_AD3_CLK	GPIO_02	GPIO_01	GPIO_08	GPIO_13	GPIO_17	HOST_IF_SEL	FLSH_SPI_DIO_0	FLSH_SPI_DIO_2	FLSH_SPI_CSZ	FLSH_SPI_CLK	GND	1
	A	B	C	D	E	F	G	H	J	K	L	M	N	P	R	T	U	V	

図 4-2. DLPC231 ZEK Package
324-Pin BGA
Top View

Copyright © 2024 Texas Instruments Incorporated

表 4-1. Pin Functions—Board Level Test, Debug, and Initialization

PIN			I/O[1]	DESCRIPTION
NAME	ZDQ324	ZEK324		
RESETZ	F3	F3	I_7	Active low power-on reset for the DLPC23x-Q1. A low-to-high transition starts self-configuration and initialization of the ASIC. ('0' = Reset, '1' = Normal Operation) All ASIC power and input clocks must be stable before this reset is deasserted high. The signals listed below must be forced low by external pulldown, and will then be driven low as the power supplies stabilize with RESETZ asserted. *PMIC_LEDSEL_0, PMIC_LEDSEL_1, PMIC_LEDSEL_2, PMIC_LEDSEL_3, DMD_DEN_ARSTZ, PMIC_AD3_CLK, and PMIC_AD3_MOSI* All other bidirectional and output signals will be tristated while reset is asserted. External pullups or pulldowns must be added where necessary to protect external devices that can typically be driven by the ASIC to prevent device malfunction. This pin includes hysteresis. Specific timing requirements for this signal are shown in セクション 5.12.
PMIC_PARKZ	E3	E4	I_7	DMD Park Control ('0' = Park, '1' = Un-Park) The TI TPS99000-Q1 device is used to control this signal. As part of this function, it monitors power to the DLPC23x-Q1 watching for an imminent power loss condition, upon which it will drive the PMIC_PARKZ signal accordingly. The specific timing requirements for this signal are shown in セクション 5.12.
HOST_IF_SEL	R4	N1	$B_{13,14}$	Selects which input interface port will be used for Host Command and Control. The port that is not selected as the Host Command and Control port will be available as a Diagnostic Processor monitoring port. ('0' = Host SPI, '1' = Host I^2C) This pin includes a weak internal pulldown. If a pullup is used to obtain a '1' value, the pullup value must be ≤ 8kΩ. Tristated while RESETZ is asserted low, and is sampled as a host directive approximately 1.5µs after RESETZ is deasserted. It can be driven as an output for TI debug use after sampling.
HOST_SPI_MODE	V1	P2	$B_{13,14}$	Selects the SPI mode (clock phase and polarity) that will be used with the HOST SPI interface. This value is applicable regardless of whether the Host SPI interface is used for Host Command and Control, or for the Diagnostic Processor monitoring port. ('0' = SPI Mode 0 or 3, '1' = SPI Mode 1 or 2) This pin includes a weak internal pulldown. If a pullup is used to obtain a '1' value, the pullup value must be ≤ 8kΩ. Tristated while RESETZ is asserted low, and is sampled as a host directive approximately 1.5µs after RESETZ is deasserted. It can be driven as an output for TI debug use after sampling.
RTPPUB_ENZ	AA3	U2	$B_{13,14}$	TI internal use. Must be left unconnected. Includes a weak pulldown
CRCZ_CHKSUM_SEL	AB3	V2	$B_{13,14}$	Selects whether the Host will use 8-bit CRC or checksum on the Host Command and Control interface. This value is only applicable for the Host Command and Control interface. The value for the Diagnostic Processor monitoring port will be specified in Flash. ('0' = 8-bit CRC, '1' = 8-bit checksum) This pin includes a weak internal pulldown. If a pullup is used to obtain a '1' value, the pullup value must be ≤ 8kΩ. Tristated while RESETZ is asserted low, and is sampled as a host directive approximately 1.5µs after RESETZ is deasserted. It can be driven as an output for TI debug use after sampling.
ETM_TRACECLK	AB6	R10	O_{13}	TI internal use. Must be left unconnected (clock for Trace Debug)
ETM_TRACECTL	AB7	R9	O_{13}	TI internal use. Must be left unconnected (control for Trace Debug)

表 4-1. Pin Functions—Board Level Test, Debug, and Initialization (続き)

PIN			I/O[(1)]	DESCRIPTION
NAME	ZDQ324	ZEK324		
TSTPT_0	Y4	R3	$B_{13,14}$	Test pin 0 / STAY-IN-BOOT: Selects whether the system must stay in the Boot Application, or proceed with the normal load of the Main Application. ('0' = Load Main Application, '1' = Stay in Boot Application) This pin includes a weak internal pulldown. If a pullup is being used to obtain a '1' value, the pullup value must be ≤ 8kΩ. Tristated while RESETZ is asserted low, and is sampled as a host directive approximately 1.5µs after RESETZ is deasserted. It can be driven as an output for debug use after sampling as described in セクション 7.3.11.
TSTPT_1	AA4	R4	$B_{13,14}$	Test pin 1: This pin must be externally pulled down, left open or unconnected. Includes a weak pulldown. It can be driven as an output for debug use as described in セクション 7.3.11.
TSTPT_2	Y5	R5	$B_{13,14}$	Test pin 2: This pin must be externally pulled down, left open or unconnected. Includes a weak pulldown. It can be driven as an output for debug use as described in セクション 7.3.11.
TSTPT_3	AA5	R7	$B_{13,14}$	Test pin 3: This pin must be externally pulled down, left open or unconnected. Includes a weak pulldown. It can be driven as an output for debug use as described in セクション 7.3.11.
TSTPT_4	Y6	P4	$B_{13,14}$	Test pin 4: This pin must be externally pulled down, left open or unconnected. Includes a weak pulldown. It can be driven as an output for debug use as described in セクション 7.3.11.
TSTPT_5	AA6	R8	$B_{13,14}$	Test pin 5 / Spread Spectrum Disable: Selects whether spread spectrum flash settings are used or whether spread spectrum clocking will be disabled. ('0' = Spread Spectrum Disabled, '1' = Use flash Spread Spectrum settings) This pin includes a weak internal pulldown. If a pullup is being used to obtain a '1' value, the pullup value must be ≤ 8kΩ. This signal is tristated while RESETZ is asserted low, and is sampled as a host directive approximately 1.5µs after RESETZ is deasserted. It can be driven as an output for debug use after sampling as described in セクション 7.3.11.
TSTPT_6	Y7	P6	$B_{13,14}$	Test pin 6: An external pullup resistor must be used (≤ 8kΩ because pin includes a weak pulldown). This signal is tristated while RESETZ is asserted low, and is sampled as a host directive approximately 1.5µs after RESETZ is deasserted. It can be driven as an output for debug use after sampling as described in セクション 7.3.11.
TSTPT_7	AA7	P7	$B_{13,14}$	Test pin 7: This pin must be externally pulled down, left open or unconnected. Includes a weak pulldown. It can be driven as an output for debug use as described in セクション 7.3.11.
HWTEST_EN	H3	J5	I_{14}	Manufacturing test enable signal. This signal must be connected directly to ground on the PCB. Includes a weak internal pulldown and hysteresis
JTAGTCK	G22	H17	I_{11}	JTAG Serial Data Clock Includes a weak internal pullup

Copyright © 2024 Texas Instruments Incorporated

表 4-1. Pin Functions—Board Level Test, Debug, and Initialization (続き)

PIN			I/O[1]	DESCRIPTION
NAME	ZDQ324	ZEK324		
JTAGTMS1	G21	H16	I_{11}	JTAG Test Mode Select Includes a weak internal pullup
JTAGTRSTZ	L20	G16	I_{11}	JTAG Reset Includes a weak internal pullup and Hysteresis. For normal operation, this pin must be pulled to ground through an external 8kΩ or less resistor. **Failure to pull this pin low during normal operation will cause start-up and initialization problems.** For JTAG Boundary Scan, this pin must be pulled-up or left disconnected.
JTAGTDI	K20	G17	I_{11}	JTAG Serial Data In Includes a weak internal pullup
JTAGTDO1	J20	G15	$B_{10,11}$	JTAG Serial Data Out Includes a weak internal pullup
JTAGTDO2	H20	F18	$B_{10,11}$	This pin must be left open or unconnected. Includes a weak internal pullup
JTAGTDO3	G20	F17	$B_{10,11}$	This pin must be left open or unconnected. Includes a weak internal pullup
JTAGTMS2	N20	H15	I_{11}	This pin must be left open or unconnected. Includes a weak internal pullup. See セクション 7.3.11 for important debug access considerations.
JTAGTMS3	M20	G18	I_{11}	This pin must be left open or unconnected. Includes a weak internal pullup. See セクション 7.3.11 for important debug access considerations.

(1) See 表 4-10 for more information on I/O definitions.

表 4-2. Pin Functions—Parallel Port Input Data and Control

PIN [1]			I/O[2]	DESCRIPTION PARALLEL RGB MODE
NAME	ZDQ324	ZEK324		
PCLK	R22	M18	I_{11}	Pixel clock
VSYNC	H21	J18	I_{11}	Vsync[3]
HSYNC	H22	H18	I_{11}	Hsync[3]
DATEN	P21	M17	I_{11}	Data Valid
				(TYPICAL RGB 888)
PDATA_0 PDATA_1 PDATA_2 PDATA_3 PDATA_4 PDATA_5 PDATA_6 PDATA_7	AA21 AA22 Y21 W21 Y22 V21 W22 U21	V17 U17 U18 T17 T18 R17 R18 P17	I_{11}	Blue (bit weight 1) Blue (bit weight 2) Blue (bit weight 4) Blue (bit weight 8) Blue (bit weight 16) Blue (bit weight 32) Blue (bit weight 64) Blue (bit weight 128)
				(TYPICAL RGB 888)
PDATA_8 PDATA_9 PDATA_10 PDATA_11 PDATA_12 PDATA_13 PDATA_14 PDATA_15	V22 T21 U22 R21 T22 P22 N21 N22	P18 N18 P16 N16 N17 M16 L18 L17	I_{11}	Green (bit weight 1) Green (bit weight 2) Green (bit weight 4) Green (bit weight 8) Green (bit weight 16) Green (bit weight 32) Green (bit weight 64) Green (bit weight 128)
				(TYPICAL RGB 888)

表 4-2. Pin Functions—Parallel Port Input Data and Control (続き)

PIN (1)			I/O(2)	DESCRIPTION PARALLEL RGB MODE
NAME	ZDQ324	ZEK324		
PDATA_16	M22	L16	I_{11}	Red (bit weight 1)
PDATA_17	M21	K18		Red (bit weight 2)
PDATA_18	L22	K17		Red (bit weight 4)
PDATA_19	L21	K16		Red (bit weight 8)
PDATA_20	K22	K15		Red (bit weight 16)
PDATA_21	K21	J17		Red (bit weight 32)
PDATA_22	J22	J16		Red (bit weight 64)
PDATA_23	J21	J15		Red (bit weight 128)

(1) Unused inputs must be grounded or pulled down to ground through an external resistor (≤ 10kΩ).
(2) See 表 4-10 for more information on I/O definitions.
(3) VSYNC and HSYNC polarity are software programmable.

表 4-3. Pin Functions—OpenLDI Ports Input Data and Control

PIN (1) (2)			I/O(3)	DESCRIPTION
NAME	ZDQ324	ZEK325		
L1_CLK_P L1_CLK_N	AB11 AA11	V6 U6	I_{18}	OpenLDI (FPD Link I) Port 1 Clock Lane
L1_DATA0_P L1_DATA0_N L1_DATA1_P L1_DATA1_N L1_DATA2_P L1_DATA2_N L1_DATA3_P L1_DATA3_N	AB9 AA9 AB10 AA10 AB12 AA12 AB13 AA13	V4 U4 V5 U5 V7 U7 V8 U8	I_{18}	OpenLDI (FPD Link I) Port 1 Data Lanes: Intraport data lane swapping can be done on a product configuration basis to support board considerations.
L2_CLK_P L2_CLK_N	AB17 AA17	V12 U12	I_{18}	OpenLDI (FPD Link I) Port 2 Clock Lane
L2_DATA0_P L2_DATA0_N L2_DATA1_P L2_DATA1_N L2_DATA2_P L2_DATA2_N L2_DATA3_P L2_DATA3_N	AB15 AA15 AB16 AA16 AB18 AA18 AB19 AA19	V10 U10 V11 U11 V13 U13 V14 U14	I_{18}	OpenLDI (FPD Link I) Port 2 Data Lanes: Intraport data lane swapping can be done on a product configuration basis to support board considerations.

(1) The system only supports the operational use of one port. As two ports are available, the host can select which port they wish to be active (to optimize board routing as an example).
(2) The inputs for any unused ports must be left unconnected, and will be powered down by the system.
(3) See 表 4-10 for more information on I/O definitions.

表 4-4. Pin Functions—DMD Reset and Bias Control Interfaces

PIN (1) (2)			I/O(3)	DESCRIPTION
NAME	ZDQ324	ZEK324		
DMD_DEN_ARSTZ	D11	D9	O_1	DMD driver enable signal ('1' = Enabled, '0' = Reset) This signal will be driven low after the DMD is parked and before power is removed from the DMD. If the 1.8V power to the DLPC23x-Q1 is independent of the 1.8V power to the DMD, then an external pulldown resistor (≤ 2.2kΩ) must be used to hold the signal low in the event DLPC23x-Q1 power is inactive while DMD power is applied.
DMD_LS0_CLK	C11	C9	O_2	TI internal use. Must be left unconnected
DMD_LS0_WDATA	C10	D8	O_2	TI internal use. Must be left unconnected
DMD_LS0_RDATA	C9	C7	I_3	DMD, low-speed single-ended serial read data
DMD_LS1_RDATA	C8	C8	I_3	DMD, low-speed single-ended serial read data (Training data response for second port of DMD)

Copyright © 2024 Texas Instruments Incorporated

表 4-4. Pin Functions—DMD Reset and Bias Control Interfaces (続き)

PIN (1) (2)			I/O(3)	DESCRIPTION
NAME	ZDQ324	ZEK324		
DMD_LS0_CLK_P DMD_LS0_CLK_N	B12 A12	B10 A10	O_4	DMD low-speed differential interface clock
DMD_LS0_WDATA_P DMD_LS0_WDATA_N	B11 A11	B9 A9	O_4	DMD low-speed differential interface write data

(1) The low-speed write control interface to the DMD is differential.
(2) All control interface reads will make use of the single-ended low-speed signals. The read data will be clocked by the write clock .
(3) See 表 4-10 for more information on I/O definitions.

表 4-5. Pin Functions—DMD SubLVDS Interfaces

PIN			I/O(1)	DESCRIPTION
NAME	ZDQ324	ZEK324		
DMD_HS0_CLK_P DMD_HS0_CLK_N	B17 A17	B15 A15	O_4	DMD high-speed interface, Port 0 Clock Lane.
DMD_HS0_WDATA0_P DMD_HS0_WDATA0_N DMD_HS0_WDATA1_P DMD_HS0_WDATA1_N DMD_HS0_WDATA2_P DMD_HS0_WDATA2_N DMD_HS0_WDATA3_P DMD_HS0_WDATA3_N DMD_HS0_WDATA4_P DMD_HS0_WDATA4_N DMD_HS0_WDATA5_P DMD_HS0_WDATA5_N DMD_HS0_WDATA6_P DMD_HS0_WDATA6_N DMD_HS0_WDATA7_P DMD_HS0_WDATA7_N	B21 A21 B20 A20 B19 A19 B18 A18 B16 A16 B15 A15 B14 A14 B13 A13	D17 D18 C17 C18 B17 A17 B16 A16 B14 A14 B13 A13 B12 A12 B11 A11	O_4	DMD high-speed interface, Port 0 Data Lanes: The true numbering and application of the DMD_HS_DATA pins are software configuration dependent as discussed in セクション 7.3.3.
DMD_HS1_CLK_P DMD_HS1_CLK_N	B6 A6	B4 A4	O_4	DMD high-speed interface, Port 1 Clock Lane
DMD_HS1_WDATA0_P DMD_HS1_WDATA0_N DMD_HS1_WDATA1_P DMD_HS1_WDATA1_N DMD_HS1_WDATA2_P DMD_HS1_WDATA2_N DMD_HS1_WDATA3_P DMD_HS1_WDATA3_N DMD_HS1_WDATA4_P DMD_HS1_WDATA4_N DMD_HS1_WDATA5_P DMD_HS1_WDATA5_N DMD_HS1_WDATA6_P DMD_HS1_WDATA6_N DMD_HS1_WDATA7_P DMD_HS1_WDATA7_N	B2 A2 B3 A3 B4 A4 B5 A5 B7 A7 B8 A8 B9 A9 B10 A10	D2 D1 C2 C1 B2 A2 B3 A3 B5 A5 B6 A6 B7 A7 B8 A8	O_4	DMD high-speed interface, Port 1 Data Lanes: The true numbering and application of the DMD_HS_DATA pins are software configuration dependent as discussed in セクション 7.3.3.

(1) See 表 4-10 for more information on I/O definitions.

表 4-6. Pin Functions—Peripheral Interfaces

PIN			I/O[1]	DESCRIPTION
NAME	ZDQ324	ZEK324		
HOST_IRQ[2]	T20	N15	O_{10}	Host interrupt (output active HIGH) This signal is used to indicate that the DLPC23x-Q1 has detected a serious error for which the ASIC has initiated an Emergency Shutdown. This is discussed further in *セクション 6.1*. The DLPC23x-Q1 tristates this output during reset. An external pulldown (≤ 10kΩ) is required to drive this signal to its inactive state.
HOST_IIC_SCL	R20	M15	B_{12}	I^2C Port, Host Command and Control to ASIC, SCL (bidirectional, open-drain): An external pullup is required.
HOST_IIC_SDA	P20	L15	B_{12}	I^2C Port, Host Command and Control to ASIC, SDA (bidirectional, open-drain): An external pullup is required.
HOST_SPI_CLK	Y20	U16	I_{11}	SPI Port, Host Command and Control to ASIC, clock
HOST_SPI_CSZ	W20	T16	I_{11}	SPI Port, Host Command and Control to ASIC, chip select (active low input) An external pullup resistor (≤ 2.2kΩ) is required to avoid a floating chip select input to the ASIC.
HOST_SPI_DIN	V20	R16	I_{11}	SPI Port, Host Command and Control to ASIC, receive data in
HOST_SPI_DOUT	U20	P15	O_{10}	SPI Port, Host Command and Control to ASIC, transmit data out
FLSH_SPI_CSZ	Y1	T1	O_8	SPI Port, Control Interface to Flash device, chip select (active low output) An external pullup resistor (≤ 10kΩ) is required to avoid a floating chip select input to the Flash.
FLSH_SPI_CLK	W1	U1	O_8	SPI Port, Control Interface to Flash device, clock
FLSH_SPI_DIO_0	V2	P1	$B_{8,9}$	SPI Port, Control Interface to Flash device, transmit and receive data An external pullup resistor (≤ 10kΩ) is required.
FLSH_SPI_DIO_1	W2	R2	$B_{8,9}$	SPI Port, Control Interface to Flash device, transmit and receive data An external pullup resistor (≤ 10kΩ) is required.
FLSH_SPI_DIO_2	Y2	R1	$B_{8,9}$	SPI Port, Control Interface to Flash device, transmit and receive data An external pullup resistor (≤ 3.3kΩ) is required.
FLSH_SPI_DIO_3	W3	T2	$B_{8,9}$	SPI Port, Control Interface to Flash device, transmit and receive data An external pullup resistor (≤ 3.3kΩ) is required.
PMIC_INTZ[2]	G3	E2	I_7	TPS99000-Q1 interrupt (input with hysteresis) The ASIC provides a weak internal pullup.
PMIC_SPI_CLK	E1	F5	O_6	SPI Port, General Control Interface to TPS99000-Q1, clock
PMIC_SPI_CSZ0	E2	G4	O_6	SPI Port, General Control Interface to TPS99000-Q1, chip select 0 (active low output) An external pullup resistor (≤ 10kΩ) must be used to avoid floating chip select inputs to the external SPI device during ASIC reset assertion.
PMIC_SPI_DIN	F1	E3	I_7	SPI Port, General Control Interface to TPS99000-Q1, receive data in
PMIC_SPI_DOUT	D1	E5	O_6	SPI Port, General Control Interface to TPS99000-Q1, transmit data out
PMIC_AD3_CLK	H2	G1	O_{20}	Sequencer Clock / TPS99000-Q1 primary system clock An external pulldown resistor (≤ 10kΩ) must be used to avoid uncontrolled behavior during ASIC reset assertion.
PMIC_AD3_MISO	J2	G2	I_{14}	Measurement control interface to TPS99000-Q1, receive data in
PMIC_AD3_MOSI	J1	G3	O_{20}	Measurement control interface to TPS99000-Q1, transmit data out An external pulldown resistor (≤ 10kΩ) must be used to avoid uncontrolled behavior during ASIC reset assertion.
PMIC_LEDSEL_0	F2	F4	O_6	LED Control Interface to TPS99000-Q1 An external pulldown resistor (≤ 10kΩ) must be used to avoid uncontrolled illumination during ASIC reset assertion.
PMIC_LEDSEL_1	G1	E1	O_6	LED Control Interface to TPS99000-Q1 An external pulldown resistor (≤ 10kΩ) must be used to avoid uncontrolled illumination during ASIC reset assertion.

Copyright © 2024 Texas Instruments Incorporated

表 4-6. Pin Functions—Peripheral Interfaces (続き)

PIN			I/O[1]	DESCRIPTION
NAME	ZDQ324	ZEK324		
PMIC_LEDSEL_2	G2	F2	O_6	LED Control Interface to TPS99000-Q1 An external pulldown resistor (≤ 10kΩ) must be used to avoid uncontrolled illumination during ASIC reset assertion.
PMIC_LEDSEL_3	H1	F1	O_6	LED Control Interface to TPS99000-Q1 An external pulldown resistor (≤ 10kΩ) must be used to avoid uncontrolled illumination during ASIC reset assertion.
MSTR_SDA	AB5	T7	B_{15}	I^2C Port, SDA. (bidirectional, open-drain) An external pullup is required. Typical use of the Master I^2C port is communication with temperature sensing devices and an optional EEPROM. The Master I^2C I/Os are powered by VCC3IO (3.3V only).
MSTR_SCL	AB4	R6	B_{15}	I^2C Port, SCL. (bidirectional, open-drain) An external pullup is required. Typical use of the Master I^2C port is communication with temperature sensing devices and an optional EEPROM. The Master I^2C I/Os are powered by VCC3IO (3.3V only).

(1) See 表 4-10 for more information on I/O definitions.
(2) For more information about usage, see *セクション 6.1*.

表 4-7. Pin Functions—GPIO Peripheral Interface

PIN [1] [3]			I/O[2]	DESCRIPTION
NAME	ZDQ324	ZEK324		
GPIO_31	D22	E15	$B_{20,14}$	General purpose I/O 31
GPIO_30	E21	E16	$B_{20,14}$	General purpose I/O 30
GPIO_29	E22	E17	$B_{20,14}$	General purpose I/O 29
GPIO_28	F20	E18	$B_{20,14}$	General purpose I/O 28
GPIO_27	F21	F15	$B_{20,14}$	General purpose I/O 27
GPIO_26	F22	F16	$B_{20,14}$	General purpose I/O 26
GPIO_25	V3	P3	$B_{20,14}$	General purpose I/O 25
GPIO_24	U3	M5	$B_{20,14}$	General purpose I/O 24
GPIO_23	U2	N4	$B_{20,14}$	General purpose I/O 23
GPIO_22	U1	N3	$B_{20,14}$	General purpose I/O 22
GPIO_21	T3	N2	$B_{20,14}$	General purpose I/O 21
GPIO_20	T2	M4	$B_{20,14}$	General purpose I/O 20
GPIO_19	T1	M3	$B_{20,14}$	General purpose I/O 19
GPIO_18	R3	M2	$B_{20,14}$	General purpose I/O 18
GPIO_17	R2	M1	$B_{20,14}$	General purpose I/O 17
GPIO_16	R1	L4	$B_{20,14}$	General purpose I/O 16
GPIO_15	P3	L3	$B_{20,14}$	General purpose I/O 15
GPIO_14	P2	L2	$B_{20,14}$	General purpose I/O 14
GPIO_13	P1	L1	$B_{20,14}$	General purpose I/O 13
GPIO_12	N3	K5	$B_{20,14}$	General purpose I/O 12
GPIO_11	N2	K4	$B_{20,14}$	General purpose I/O 11
GPIO_10	N1	K3	$B_{20,14}$	General purpose I/O 10
GPIO_09	M3	K2	$B_{20,14}$	General purpose I/O 09

Copyright © 2024 Texas Instruments Incorporated

表 4-7. Pin Functions—GPIO Peripheral Interface (続き)

PIN (1) (3)			I/O(2)	DESCRIPTION
NAME	ZDQ324	ZEK324		
GPIO_08	M2	K1	$B_{20,14}$	General purpose I/O 08
GPIO_07	M1	J4	$B_{20,14}$	General purpose I/O 07
GPIO_06	L3	J3	$B_{20,14}$	General purpose I/O 06
GPIO_05	L2	H2	$B_{20,14}$	General purpose I/O 05
GPIO_04	L1	H3	$B_{20,14}$	General purpose I/O 04
GPIO_03	K3	J2	$B_{20,14}$	General purpose I/O 03
GPIO_02	K2	H1	$B_{20,14}$	General purpose I/O 02
GPIO_01	K1	J1	$B_{20,14}$	General purpose I/O 01
GPIO_00	J3	H4	$B_{20,14}$	General purpose I/O 00

(1) Some GPIO signals are reserved for specific purposes. These signals vary per product configuration. These product allocations are discussed further in *セクション 7.3.7*. All GPIO that are available for Host use must be configured as an input, a standard output, or an open-drain output. This is set in the flash configuration or by command using the Host command interface. The reset default for all GPIO is as an input signal. An external pullup (≤ 10kΩ) is required for each signal configured as open-drain.
(2) See 表 4-10 for more information on I/O definitions.
(3) All GPIO include hysteresis.

表 4-8. Pin Functions—Clock and PLL Support

PIN			I/O(1)	DESCRIPTION
NAME	ZDQ324	ZEK324		
PLL_REFCLK_I	D15	D12	I_{17}	Reference clock crystal input. If an external oscillator is used in place of a crystal, this pin must be left unconnected (floating with no added capacitive load).
PLL_REFCLK_O	D14	D13	$B_{16,17}$	Reference clock crystal return. If an external oscillator is used in place of a crystal, this pin must be used for the oscillator input.
OSC_BYPASS	D16	C13	I_{19}	Selects whether an external crystal or external oscillator will be used to drive the internal PLL. ('0' = Crystal, '1' = Oscillator) This pin includes a weak internal pulldown. If a pullup is used to obtain a '1' value, the pullup value must be ≤ 8kΩ.

(1) See 表 4-10 for more information on I/O definitions.

表 4-9. Pin Functions—Power and Ground

PIN			I/O(1)	DESCRIPTION
NAME	ZDQ324	ZEK324		
VCC18A_LVDS	B1, B22, C1, C22, D2, D3, D4, D5, D7, D18, D19, D20, D21, E20	B1, B18, C4, C6, C15, D3, D5, D14, D16, E13, F7, F8, F10, F12	PWR	1.8V Power for the differential High-Speed and Low-Speed DMD Interfaces
GND18A_LVDS	A1, A22, C2, C3, C4, C5, C6, C7, C16, C17, C18, C19, C20, C21, D8	A1, A18, C3, C5, C14, C16, D6, E8, E10, E12, E14, F6	RTN	1.8V GND for the differential High-Speed and Low-Speed DMD Interfaces
VCC18IO	D10	E9	PWR	1.8V Power for 1.8V IO
VCC3IO_MVGP	H4	G5, H5	PWR	3.3V Power for TPS99000-Q1 Interfaces
VCC3IO_FLSH	V4	N5, P5	PWR	3.3V Power for the Serial Flash Interface
VCC3IO_INTF	K19, L19, M19, R19, T19	H14, L14, J14, M14	PWR	3.3V Power for the Parallel Data, JTAG, and Host Command Interfaces
VCC3IO_COSC	C15	E11	PWR	3.3V I/O Power for the Crystal Oscillator

Copyright © 2024 Texas Instruments Incorporated

表 4-9. Pin Functions—Power and Ground (続き)

PIN			I/O[1]	DESCRIPTION
NAME	ZDQ324	ZEK324		
GNDIOLA_COSC	C14	C12	RTN	3.3V I/O GND for the Crystal Oscillator
VCC3IO	J4, K4, M4, N4, P4, W4, W5, G19	F14, G14, K6, L5, M6, N7, P8	PWR	3.3V I/O Power for all "other" I/O (such as GPIO, TSTPT, PMIC_AD3)
VCC33A_LVDS	W9, W13, W15, W19, Y9, Y13, Y15, Y19	T3, T4, T8, T10, R11, T12, R13, T14, R15, V16	PWR	3.3V I/O Power for the OpenLDI Interface
GND33A_LVDS	W14, Y14, AA8, AA14, AA20, AB8, AB14, AB20, AB21	R12, R14, T5, T6, T9, T11, T13, T15, U3, U9, U15, V3, V9, V15	RTN	3.3V I/O GND for the OpenLDI Interface
VCC11AD_PLLM	D13	D11	PWR	1.1V Analog/Digital Power for MCG (Master Clock Generator) PLL
GND11AD_PLLM	C13	C11	RTN	1.1V Analog/Digital GND for MCG (Master Clock Generator) PLL
VCC11AD_PLLD	D12	C10	PWR	1.1V Analog/Digital Power for DCG (DMD Clock Generator) PLL
GND11AD_PLLD	C12	D10	RTN	1.1V Analog/Digital GND for DCG (DMD Clock Generator) PLL
VCC11A_DDI_0	E19, F19	F13, G13	PWR	1.1V Filtered Core Power - External Filter Group A (HS DMD Interface 0)
VCC11A_DDI_1	E4, F4	E6, E7	PWR	1.1V Filtered Core Power - External Filter Group B (HS DMD Interface 1)
VCC11A_LVDS	W11, W12, W17, W18	N10, P11, P12, P13, P14	PWR	1.1V Filtered Core Power - External Filter Group C (OpenLDI Interface)
VCCK	G4, H19, (J11), J19, L4, N19, P19, T4, U4, U19, V19, W6, W8, W10, W16	F9, F11, G6, H13, K13, L6, J6, M13, N6, N8, N9, N11	PWR	1.1V Core Power (Ball numbers in parenthesis are also used as thermal ball and are located within the package center region)
GND	(J9, J10, J12, J13, J14, K9, K10, K11, K12, K13, K14, L9, L10, L11, L12, L13, L14, M9, M10, M11, M12, M13, M14, N9, N10, N11, N12, N13, N14, P9, P10, P11, P12, P13,P14), Y3, AA1, AA2, AB1, AB2, AB22, Y10, Y11, Y12, Y16, Y17, Y18	(G7, G8, G9, G10, G11, G12, H7, H8, H9, H10, H11, H12, J7, J8, J9, J10, J11, J12, K7, K8, K9, K10, K11, K12, L7, L8, L9, L10, L11, L12, M7, M8, M9, M10, M11, M12), H6, J13, K14, L13, N12, N13, N14, V1, V18	RTN	1.1V Core GND (Ball numbers in parenthesis are also used as thermal ball and are located within the package center region)
EFUSE_VDDQ	W7	P9		Manufacturing use only. Must be tied to ground
EFUSE_POR33	Y8	P10		Manufacturing use only. Must be tied to ground
RPI_0	D17	D15	I_5	Bandgap Reference for SubLVDS drivers (Supports DMD_HS0_xxxx). Requires a resistor (1% Tolerance) to GND18A_LVDS - Value specified in 表 8-4.
RPI_1	D6	D4	I_5	Bandgap Reference for SubLVDS drivers (Supports DMD_HS1_xxxx). Requires a resistor (1% Tolerance) to GND18A_LVDS - Value specified in 表 8-4.
RPI_LS	D9	D7	I_5	Bandgap References for SubLVDS drivers (Supports DMD_LS0_xxxx differential bus signals). Requires a resistor (1% Tolerance) to GND18A_LVDS - Value specified in 表 8-4.

(1) See 表 4-10 for more information on I/O definitions.

表 4-10. I/O Type Subscript Definition

I/O[1]		SUPPLY REFERENCE	ESD STRUCTURE
SUBSCRIPT	DESCRIPTION		
1	1.8V LVCMOS Input	VCC18IO	ESD diode to GND and supply rail
2	1.8V LVCMOS Output	VCC18IO	ESD diode to GND and supply rail
3	1.8V LVCMOS Input	VCC18IO	ESD diode to GND and supply rail
4	1.8V SubLVDS Output	VCC18A_LVDS	ESD diode to GND and supply rail
5	1.8V SubLVDS Input	VCC18A_LVDS	ESD diode to GND and supply rail
6	3.3V LVCMOS Output	VCC3IO_MVGP	ESD diode to GND and supply rail
7	3.3V LVCMOS Input	VCC3IO_MVGP	ESD diode to GND and supply rail
8	3.3V LVCMOS Output	VCC3IO_FLSH	ESD diode to GND and supply rail
9	3.3V LVCMOS Input	VCC3IO_FLSH	ESD diode to GND and supply rail
10	3.3V LVCMOS Output	VCC3IO_INTF	ESD diode to GND and supply rail
11	3.3V LVCMOS Input	VCC3IO_INTF	ESD diode to GND and supply rail
12	3.3V I^2C I/O	VCC3IO_INTF	ESD diode to GND and supply rail
13	3.3V LVCMOS Output	VCC3IO	ESD diode to GND and supply rail
14	3.3V LVCMOS Input	VCC3IO	ESD diode to GND and supply rail
15	3.3V I^2C I/O with 3mA drive	VCC3IO	ESD diode to GND and supply rail
16	3.3V LVCMOS Output	VCC3IO_OSC	ESD diode to GND and supply rail
17	3.3V LVCMOS Input	VCC3IO_OSC	ESD diode to GND and supply rail
18	3.3V LVDS Input	VCC33A_LVDS	ESD diode to GND and supply rail
19	3.3V LVCMOS Input	VCC3IO_OSC	ESD diode to GND and supply rail
20	3.3V LVCMOS Output	VCC3IO	ESD diode to GND and supply rail
TYPE			
I	Input	N/A	
O	Output		
B	Bidirectional		
PWR	Power		
RTN	Ground return		

(1) External inputs (OLDI, Parallel RGB, GPIO, and so on) must not be driven until power supplies are valid.

表 4-11. Internal Pullup and Pulldown Characteristics

INTERNAL PULLUP AND PULLDOWN RESISTOR CHARACTERISTICS [1] [2]	VCCIO	MIN	MAX	UNIT
Weak pullup resistance	3.3V	40	190	kΩ
Weak pulldown resistance	3.3V	30	190	kΩ

(1) The resistance is dependent on the supply voltage level applied to the I/O.
(2) An external 8kΩ or less pullup or pulldown (if needed) will work for any voltage condition to correctly override any associated internal pullups or pulldowns.

Copyright © 2024 Texas Instruments Incorporated

5 Specifications

5.1 Absolute Maximum Ratings

over operating free-air temperature (unless otherwise noted)[1]

		MIN	MAX	UNIT
SUPPLY VOLTAGE[2]				
$V_{(VCCK)}$ (Core)		–0.5	1.5	V
$V_{(VCC11A_DDIx)}$ (Core)		–0.5	1.5	V
$V_{(VCC11A_LVDS)}$ (Core)		–0.5	1.5	V
$V_{(VCC11AD_PLLM)}$ (Core)		–0.5	1.5	V
$V_{(VCC11AD_PLLD)}$ (Core)		–0.5	1.5	V
$V_{(VCC18A_LVDS)}$		–0.5	2.5	V
$V_{(VCC18IO)}$		–0.5	2.5	V
$V_{(VCC3IO_MVGP)}$		–0.5	4.6	V
$V_{(VCC3IO_INF)}$		–0.5	4.6	V
$V_{(VCC3IO_FLSH)}$		–0.5	4.6	V
$V_{(VCC3IO_OSC)}$		–0.5	4.6	V
$V_{(VCC3IO)}$		–0.5	4.6	V
$V_{(VCC33A_LVDS)}$		–0.5	4.6	V
GENERAL				
T_J	Operating junction temperature	–40	125	°C
T_C	Operating case temperature	–40	124[3]	°C
I_{lat}	Latch-up	–100	100	mA
T_{stg}	Storage temperature range	–40	150	°C

(1) Stresses beyond those listed under *セクション 5.1* may cause permanent damage to the device. These are stress ratings only, which do not imply functional operation of the device at these or any other conditions beyond those indicated under *セクション 5.3*. Exposure to absolute-maximum-rated conditions for extended periods may affect device reliability.
(2) All voltage values are with respect to GND.
(3) Value calculated using package parameters defined in *セクション 5.4*.

5.2 ESD Ratings

				VALUE ZDQ PACKAGE	VALUE ZEK PACKAGE	UNIT
$V_{(ESD)}$	Electrostatic discharge	Human-body model (HBM), per AEC Q100-002[1]		±2000	±2000	V
		Charged-device model (CDM), per AEC Q100-011	All pins (except corner pins)	±500	±500	
			Corner pins only (ZDQ: A1, A22, AB0, and AB22) (ZEK: A1, A18, V1, V18)	±750	±750	

(1) AEC Q100-002 indicates that HBM stressing shall be in accordance with the ANSI/ESDA/JEDEC JS-001 specification.

5.3 Recommended Operating Conditions

over operating free-air temperature range (unless otherwise noted)

			MIN	NOM	MAX	UNIT
$V_{(VCCK)}$	Core power 1.1V (main 1.1V)	±5% tolerance	1.045	1.1	1.155	V
$V_{(VCC11A_DDI_0)}$	Core power 1.1V (External Filter Group A - HS DMD Interface 0)	±8.18% tolerance(1)	1.01	1.1	1.19	V
$V_{(VCC11A_DDI_1)}$	Core power 1.1V (External Filter Group B - HS DMD Interface 1)	±8.18% tolerance(1)	1.01	1.1	1.19	V
$V_{(VCC11A_LVDS)}$	Core power 1.1V (External Filter Group C - OpenLDI Interface)	±8.18% tolerance(1)	1.01	1.1	1.19	V
$V_{(VCC11AD_PLLM)}$	MCG PLL 1.1V power (Analog/Digital)	±8.18% tolerance(1)	1.01	1.1	1.19	V
$V_{(VCC11AD_PLLD)}$	DCG PLL 1.1V power (Analog/Digital)	±8.18% tolerance(1)	1.01	1.1	1.19	V
$V_{(VCC18IO)}$	1.8V I/O power (Supports DMD Single-Ended LS interface I/O)	±8.3% tolerance	1.65	1.8	1.95	V
$V_{(VCC18A_LVDS)}$	1.8V I/O power (Supports High-Speed and Low-Speed differential DMD interfaces)	±8.3% tolerance	1.65	1.8	1.95	V
$V_{(VCC3IO_MVGP)}$	3/3V I/O power (Supports TPS99000-Q1: SPI, interrupt, park, RESETZ, and LEDSEL interfaces	±8.5% tolerance	3.02	3.3	3.58	V
$V_{(VCC3IO_FLSH)}$	3/3V I/O power (Supports serial flash interface)	±8.5% tolerance	3.02	3.3	3.58	V
$V_{(VCC3IO_INTF)}$	3.3V I/O power (Supports: host command (SPI and I^2C), parallel data interface, HOST_IRQ, and JTAG	±8.5% tolerance	3.02	3.3	3.58	V
$V_{(VCC3IO_OSC)}$	3.3V I/O power (Supports Oscillator)	±8.5% tolerance	3.02	3.3	3.58	V
$V_{(VCC33A_LVDS)}$	3.3V I/O power (Supports OpenLDI interface)	±8.5% tolerance	3.02	3.3	3.58	V
$V_{(VCC3IO)}$	3.3V I/O power (Supports all remaining I/O including: GPIO, PMIC_AD3, TSTPT, ETM_TRACE, et cetera)	±8.5% tolerance	3.02	3.3	3.58	V
T_J	Operating junction temperature		–40		125	°C
T_C	Operating case temperature		–40		124	°C
T_A	Operating ambient temperature(2)		–40		105	°C

(1) These I/O supply ranges are wider to facilitate additional external filtering.
(2) Operating ambient temperature is dependent on system thermal design. Operating case temperature may not exceed its specified range across ambient temperature conditions.

5.4 Thermal Information

THERMAL METRIC(1)		ZDQ (BGA) 324 PINS	ZEK (nfBGA) 324 PINS	UNIT
ψ_{JT} (2)	Temperature variance from junction to package top center temperature, per unit power dissipation	0.77	0.2	°C/W

(1) For more information about traditional and new thermal metrics, see the *Semiconductor and IC Package Thermal Metrics* application report, SPRA953.
(2) (0.94W) × (0.2°C/W) ≈ 0.19°C temperature difference.

Copyright © 2024 Texas Instruments Incorporated

5.5 Electrical Characteristics

over operating free-air temperature range (unless otherwise noted)

PARAMETER		TEST CONDITIONS	MIN	TYP[1]	MAX[2]	UNIT
TOTAL						
$I_{(VCC11)}$	1.1V total current			201	467.1	mA
$I_{(VCC18)}$	1.8V total current			71	151.6	mA
$I_{(VCC33)}$	3.3V total current			28.1	30.1	mA
ESTIMATED CURRENT PER SUPPLY[3]						
$I_{(VCCK)}$	1.1V Core current			131.5	390.7	mA
$I_{(VCC11A_DDI_0)}$	1.1V Core current (Filtered)	At 600MHz data rate		15.8	17.4	mA
$I_{(VCC11A_DDI_1)}$	1.1V Core current (Filtered)	At 600MHz data rate		15.8	17.4	mA
$I_{(VCC11A_LVDS)}$	1.1V Core current (Filtered)	OpenLDI Interface, single port, 5 lanes active		22.5	24.8	mA
$I_{(VCC11AD_PLLM)}$	1.1V Core current (MCG PLL)			7.7	8.4	mA
$I_{(VCC11AD_PLLD)}$	1.1V Core current (DCG PLL)			7.7	8.4	mA
$I_{(VCC18A_LVDS)}$	1.8V I/O current (Both 8-bit ports - DMD HS differential Interface)	At 600MHz data rate		63.3	131.5	mA
$I_{(VCC18A_LVDS)}$	1.8V I/O current (DMD LS differential Interface)	At 120MHz data rate		5.2	10.7	mA
$I_{(VCC18IO)}$	1.8V I/O current (DMD LS single-ended interfaces, DMD reset)			2.5	9.4	mA
$I_{(VCC3IO_MVGP)}$	3.3V I/O current (TPS99000-Q1 SPI, TPS99000-Q1 Reset, PMIC_PARKZ, RESETZ)			1.7	1.8	mA
$I_{(VCC3IO_INTF)}$	3.3V I/O current (Host SPI, Host I^2C, Host IRQ, JTAG, Parallel Port)			1.7	1.8	mA
$I_{(VCC3IO_FLSH)}$	3.3V I/O current (Serial Flash SPI interface)			5.5	5.9	mA
$I_{(VCC3IO_OSC)}$	3.3V I/O current (Crystal/Oscillator)	With 3kΩ external series resistor (R_S)		0.975	1.3	mA
$I_{(VCC3IO)}$	3.3V I/O current (GPIO, PMIC_AD3, Mstr I^2C, TSTPT, ETM, and so forth)			12.6	13.5	mA
$I_{(VCC33A_LVDS)}$	3.3V I/O current (OpenLDI Interface - each port - 5 lanes active)			6.3	6.8	mA

(1) Typical-case power measured with PVT condition = nominal process, typical voltage, typical temperature (25°C case temperature). Input source 1152 × 576 24-bit 60Hz OpenLDI with RGBW ramp image.
(2) Worst-case power PVT condition = corner process, high voltage, high temperature (105°C case temperature). Input source 1358 × 566 24-bit.
60Hz OpenLDI with pseudo-random noise image.
(3) Estimated current per supply was not directly measured. These values are based on an approximate expected current consumption percentage of the total measured current drawn by each voltage rail.

5.6 Electrical Characteristics for Fixed Voltage I/O

over operating free-air temperature range (unless otherwise noted)[1]

PARAMETER			TEST CONDITIONS	MIN	TYP	MAX	UNIT
V_{IH}	High-level input threshold voltage	1.8V LVCMOS (I/O type 3)		0.7 × VCC18IO			V
		3.3V LVCMOS (I/O type 7)		2.0			
		3.3V LVCMOS (I/O type 9)		2.0			
		3.3V LVCMOS (I/O type 11)		2.0			
		3.3V I^2C buffer (I/O type 12)		0.7 × VCC_INTF			
		3.3V LVCMOS (I/O type 14)		2.0			
		3.3V LVCMOS (I/O type 16,17)		0.7 × VCC3IO			
		3.3V LVCMOS (I/O type 19)		2.0			
		3.3V I^2C buffer (I/O type 15)		0.7 × VCC3IO			
V_{IL}	Low-level input threshold voltage	1.8V LVCMOS (I/O type 3)				0.3 × VCC18IO	V
		3.3V LVCMOS (I/O type 7)				0.8	
		3.3V LVCMOS (I/O type 9)				0.8	
		3.3V LVCMOS (I/O type 11)				0.8	
		3.3V I^2C buffer (I/O type 12)				0.3 × VCC_INTF	
		3.3V LVCMOS (I/O type 14)				0.8	
		3.3V LVCMOS (I/O type 16,17)				0.3 × VCC3IO	
		3.3V LVCMOS (I/O type 19)				0.8	
		3.3V I^2C buffer (I/O type 15)				0.3 × VCC3IO	
V_{OH}	High-level output voltage	1.8V LVCMOS (I/O type 1,2)	I_{OH} = Max rated	0.75 × VCC18IO			V
		3.3V LVCMOS (I/O type 6)	I_{OH} = Max rated	2.4			
		3.3V LVCMOS (I/O type 8)	I_{OH} = Max rated	2.4			
		3.3V LVCMOS (I/O type 10)	I_{OH} = Max rated	2.4			
		3.3V I^2C buffer (I/O type 12)	I_{OH} = Max rated	N/A			
		3.3V LVCMOS (I/O type 13)	I_{OH} = Max rated	2.4			
		3.3V I^2C buffer (I/O type 15)	I_{OH} = Max rated	N/A			
		3.3V LVCMOS (I/O type 20)	I_{OH} = Max rated	2.4			
V_{OL}	Low-level output voltage	1.8V LVCMOS (I/O type 1,2)	I_{OL} = Max rated			0.4	V
		3.3V LVCMOS (I/O type 6)	I_{OL} = Max rated			0.4	
		3.3V LVCMOS (I/O type 8)	I_{OL} = Max rated			0.4	
		3.3V LVCMOS (I/O type 10)	I_{OL} = Max rated			0.4	
		3.3V I^2C buffer (I/O type 12)	I_{OL} = Max rated			0.4	
		3.3V LVCMOS (I/O type 13)	I_{OL} = Max rated			0.4	
		3.3V I^2C buffer (I/O type 15)	I_{OL} = Max rated			0.4	
		3.3V LVCMOS (I/O type 20)	I_{OL} = Max rated			0.4	
I_{OH}	High-level output current	1.8V LVCMOS (I/O type 1)		6			mA
		1.8V LVCMOS (I/O type 2)		7.2			
		3.3V LVCMOS (I/O type 6)		6			
		3.3V LVCMOS (I/O type 8)		6			
		3.3V LVCMOS (I/O type 10)		6			
		3.3V I^2C buffer (I/O type 12)		N/A			
		3.3V LVCMOS (I/O type 13)		8			
		3.3V I^2C buffer (I/O type 15)		N/A			
		3.3V LVCMOS (I/O type 20)		6			

Copyright © 2024 Texas Instruments Incorporated

5.6 Electrical Characteristics for Fixed Voltage I/O (続き)

over operating free-air temperature range (unless otherwise noted)[1]

PARAMETER			TEST CONDITIONS	MIN	TYP	MAX	UNIT
I_{OL}	Low-level output current	1.8V LVCMOS (I/O type 1)		6			mA
		1.8V LVCMOS (I/O type 2)		7.2			
		3.3V LVCMOS (I/O type 6)		6			
		3.3V LVCMOS (I/O type 8)		6			
		3.3V LVCMOS (I/O type 10)		6			
		3.3V I^2C buffer (I/O type 12)		3			
		3.3V LVCMOS (I/O type 13)		8			
		3.3V I^2C buffer (I/O type 15)		3			
		3.3V LVCMOS (I/O type 20)		6			
I_{OZ}	High-impedance leakage current	1.8V LVCMOS (I/O type 1,2)			±1.0	±10	µA
		3.3V LVCMOS (I/O type 6)			±1.0	±10	
		3.3V LVCMOS (I/O type 8)			±1.0	±10	
		3.3V LVCMOS (I/O type 10)			±1.0	±10	
		3.3V I^2C buffer (I/O type 12)				±10	
		3.3V LVCMOS (I/O type 13)			±1.0	±10	
		3.3V LVCMOS (I/O type 16)			±1.0		
		3.3V I^2C buffer (I/O type 15)				±10	
		3.3V LVCMOS (I/O type 20)			±1.0	±10	

(1) The number inside each parenthesis for the I/O refers to the type defined in 表 4-10.

5.7 DMD High-Speed SubLVDS Electrical Characteristics

over operating free-air temperature range (unless otherwise noted)

PARAMETER			MIN	NOM	MAX	UNIT
V_{CM}	Steady-state common mode voltage	1.8V SubLVDS (I/O type 4,5)	0.8	0.9	1.0	V
V_{CM} (Δpp)[1]	V_{CM} change peak-to-peak (during switching)	1.8V SubLVDS (I/O type 4,5)			75	mV
V_{CM} (Δss)[1]	V_{CM} change steady state	1.8V SubLVDS (I/O type 4,5)	–10		10	mV
$\|V_{OD}\|$[2]	Differential output voltage magnitude. R_{BGR} = 75kΩ.	1.8V SubLVDS (I/O type 4,5)	155	200	250	mV
V_{OD} (Δ)[3]	V_{OD} change (between logic states)	1.8V SubLVDS (I/O type 4,5)	–10		10	mV
V_{OH}	Single-ended output voltage high	1.8V SubLVDS (I/O type 4,5)	0.88	1.00	1.125	V
V_{OL}	Single-ended output voltage low	1.8V SubLVDS (I/O type 4,5)	0.675	0.80	0.925	V
t_R [2]	Differential output rise time	1.8V SubLVDS (I/O type 4,5)			250	ps
t_F [2]	Differential output fall time	1.8V SubLVDS (I/O type 4,5)			250	ps
f_{MAX}	Max switching rate	1.8V SubLVDS (I/O type 4,5)			1200	Mbps
DCout	Output duty cycle	1.8V SubLVDS (I/O type 4,5)	45%	50%	55%	
Tx_{term} [1]	Internal differential termination	1.8V SubLVDS (I/O type 4,5)	80	100	120	Ω

(1) Definition of V_{CM} changes:

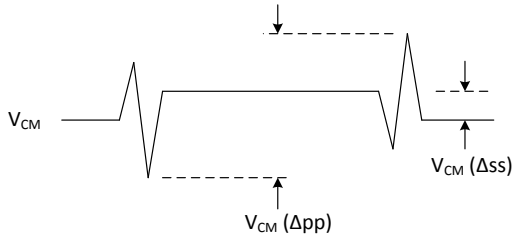

(2) Note that V_{OD} is the differential voltage swing measured across a 100Ω termination resistance connected directly between the transmitter differential pins. $|V_{OD}|$ is the magnitude of the peak to peak voltage swing across the P and N output pins. Because V_{CM} cancels out when measured differentially, V_{OD} voltage swings relative to 0. Rise and fall times are defined for the differential V_{OD} signal as follows:

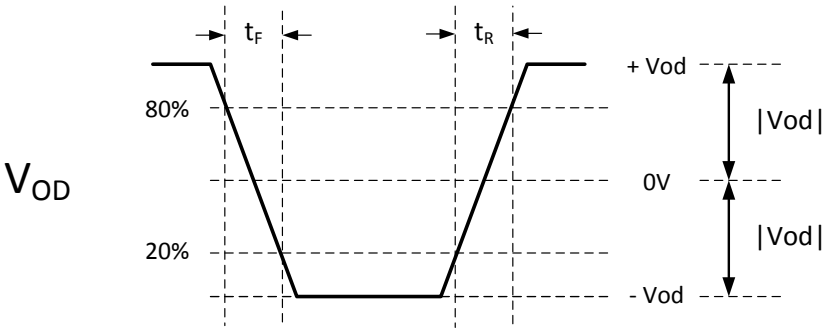

Differential Output Signal
(Note: V_{CM} is removed when signals are viewed differentially)

(3) When TX data input = '1', differential output voltage V_{OD1} is defined. When TX data input = '0', differential output voltage V_{OD0} is defined. As such, the steady state magnitude of the difference is: $|V_{OD}|$ (Δ) = $||V_{OD1}| – |V_{OD0}||$.

5.8 DMD Low-Speed SubLVDS Electrical Characteristics

over operating free-air temperature range (unless otherwise noted)

PARAMETER			MIN	NOM	MAX	UNIT
V_{CM}	Steady-state common mode voltage	1.8V SubLVDS (I/O type 4,5)	0.8	0.9	1.0	V
V_{CM} (Δpp)(1)	V_{CM} change peak-to-peak (during switching)	1.8V SubLVDS (I/O type 4,5)			75	mV
V_{CM} (Δss)(1)	V_{CM} change steady state	1.8V SubLVDS (I/O type 4,5)	–10		10	mV
$\|V_{OD}\|$(2)	Differential output voltage magnitude. R_{BGR} = 75kΩ.	1.8V SubLVDS (I/O type 4,5)	155	200	250	mV
V_{OD} (Δ)(3)	V_{OD} change (between logic states)	1.8V SubLVDS (I/O type 4,5)	–10		10	mV
V_{OH}	Single-ended output voltage high	1.8V SubLVDS (I/O type 4,5)	0.88	1.00	1.125	V
V_{OL}	Single-ended output voltage low	1.8V SubLVDS (I/O type 4,5)	0.675	0.80	0.925	V
t_R (2)	Differential output rise time	1.8V SubLVDS (I/O type 4,5)			250	ps
t_F (2)	Differential output fall time	1.8V SubLVDS (I/O type 4,5)			250	ps
t_{MAX}	Max switching rate	1.8V SubLVDS (I/O type 4,5)			240	Mbps
DCout	Output duty cycle	1.8V SubLVDS (I/O type 4,5)	45%	50%	55%	
Tx_{term}	Internal differential termination	1.8V SubLVDS (I/O type 4,5)	80	100	120	Ω

(1) Definition of V_{CM} changes:

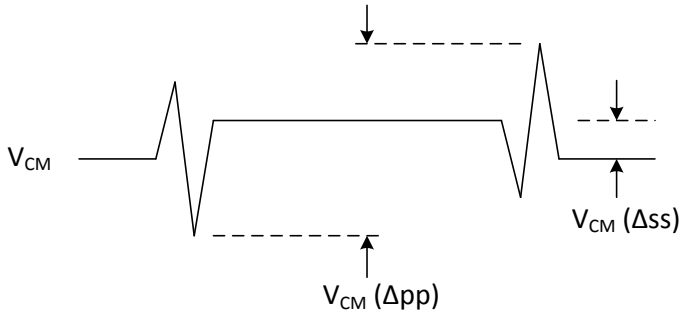

(2) Note that V_{OD} is the differential voltage swing measured across a 100Ω termination resistance connected directly between the transmitter differential pins. $|V_{OD}|$ is the magnitude of the peak to peak voltage swing across the P and N output pins. Because V_{CM} cancels out when measured differentially, V_{OD} voltage swings relative to 0. Rise and fall times are defined for the differential V_{OD} signal as follows:

Copyright © 2024 Texas Instruments Incorporated

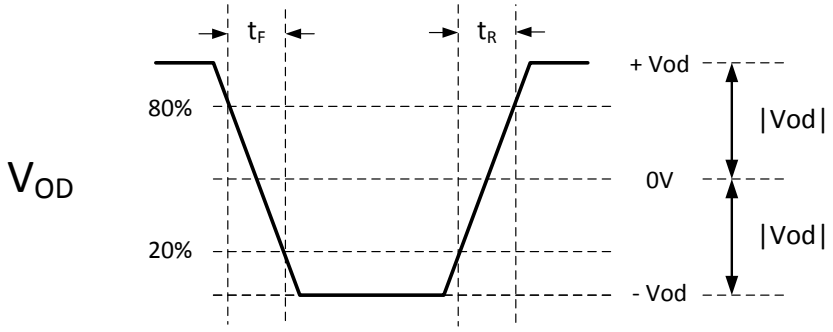

Differential Output Signal
(Note: V_{CM} is removed when signals are viewed differentially)

(3) When TX data input = '1', differential output voltage V_{OD1} is defined. When TX data input = '0', differential output voltage V_{OD0} is defined. As such, the steady state magnitude of the difference is: $|V_{OD}|$ (Δ) = $||V_{OD1}| – |V_{OD0}||$.

5.9 OpenLDI LVDS Electrical Characteristics

over operating free-air temperature range (unless otherwise noted)

PARAMETER			MIN	NOM	MAX	UNIT
V_{CM}	Steady-state common mode voltage	3.3V LVDS (I/O type 18)	0.35	1.2	1.6	V
$\|V_{ID}\|$	Differential input voltage	3.3V LVDS (I/O type 18)	100		700	mV
Rx_{term}	Internal differential termination	3.3V LVDS (I/O type 18)	90	111	132	Ω

5.10 Power Dissipation Characterisics

PARAMETER		VALUE	UNIT
P_{MAX}	Package - Maximum Power	0.94	W

5.11 System Oscillators Timing Requirements

			MIN	NOM	MAX	UNIT
f_{clock}	Clock frequency, MOSC(1)		15.997	16.000	16.003	MHz
t_c	Cycle time, MOSC (1)		62.488	62.500	62.512	ns
$t_{w(H)}$	Pulse duration(2), MOSC, high	50% to 50% reference points (signal)	40% of t_c			
$t_{w(L)}$	Pulse duration(2), MOSC, low	50% to 50% reference points (signal)	40% of t_c			
t_t	Transition time(2), MOSC, $t_t = t_f / t_r$	20% to 80% reference points (signal)	0.2		2	ns
t_{jp}	Long term periodic jitter(2), MOSC (that is the deviation in period from ideal period due solely to high frequency jitter)				100	ps

(1) The MOSC input cannot support spread spectrum clock spreading.
(2) Applies only when driven through an external digital oscillator. This is a 1 sigma RMS value.

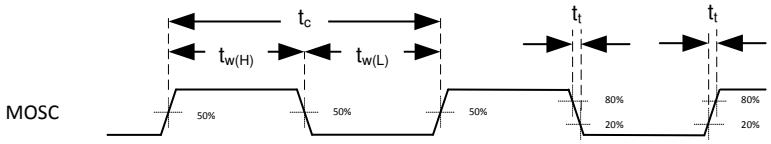

図 5-1. System Oscillators

表 5-1. Crystal / Oscillator Electrical Characteristics

PARAMETER	NOMINAL	UNIT
PLL_REFCLK_I TO GND capacitance	3.5	pF

表 5-1. Crystal / Oscillator Electrical Characteristics (続き)

PARAMETER	NOMINAL	UNIT
PLL_REFCLK_O TO GND capacitance	3.45	pF

5.12 Power Supply and Reset Timing Requirements

			MIN	MAX	UNIT
TPS99000-Q1 REQUIREMENTS(1)					
t_{ramp}	Power supply ramp time(2)	Power supply ramp to minimum recommended operating voltage	0.5	10	ms
t_{ps_aln}	1.1V Power Supply Alignment(3)	Leading edge for application or removal of power. Each 1.1V power supply to the DLPC23x-Q1 must be applied simultaneously within this time.		10	µs
t_{rst}	RESETZ low to Power Supply disable(4)	Leading edge for removal of power	1.0		µs
$t_{w(L1)}$	Pulse duration, active low, RESETZ(4)	95% power to 50% RESETZ reference point At initial application of power	5.0		ms
$t_{w(L2)}$	Pulse duration, active low, RESETZ	50% to 50% reference points (RESETZ) Subsequent resets after initial application of power	1.0		µs
t_t	Transition time, RESETZ, $t_t = t_f$ and t_r	20% to 80% reference points (signal)		6	µs

(1) The TPS99000-Q1 controls power supply timing for the DLPC23x-Q1. Refer to the *TPS99000-Q1 System Management and Illumination Controller Data Sheet* DLPS202 for additional system power timing requirements.
(2) Power supplies do not need to ramp simultaneously, but each supply must reach its minimum voltage within the maximum ramp time specified.
(3) The DLPC23x-Q1 does not require specific sequencing or alignment of 1.8V and 3.3V supplies. However, the TPS99000-Q1 enforces sequencing of the 1.1V, 1.8V, and 3.3V voltage rails. The following describes DLPC23x-Q1 behavior when the voltage rails are not brought up simultaneously:
- VCCK (1.1V core) Power = On, I/O Power = Off, RESETZ = '0': While this condition exists, additional leakage current can be drawn, and all outputs are unknown (likely to be a weak "low").
- VCCK (1.1V core) Power = Off, I/O Power = On, RESETZ = '0': While this condition exists all outputs are tristated.

Neither of these two conditions will impact normal DLPC23x-Q1 reliability.
(4) RESETZ must be held low if any supply (Core or I/O) is less than its minimum specified on value. For more information on RESETZ, see セクション 4.

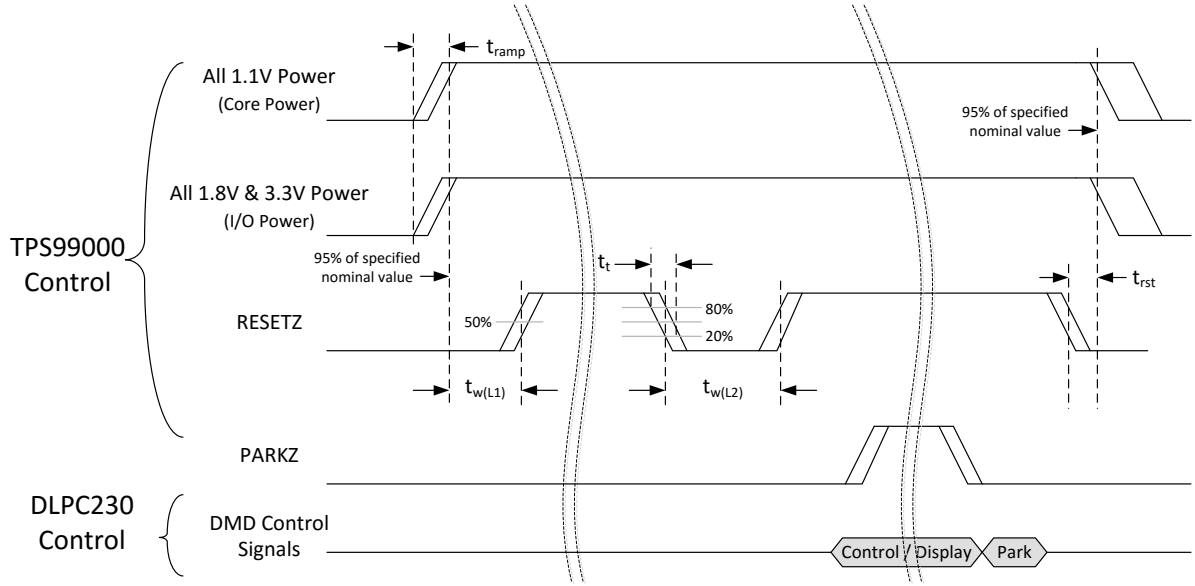

図 5-2. Power Supply and RESETZ Timing

Copyright © 2024 Texas Instruments Incorporated

5.13 Parallel Interface General Timing Requirements

			MIN	MAX	UNIT
f_{clock}	Clock frequency, PCLK		12.0	110.0	MHz
t_{p_clkper}	Clock period, PCLK	50% reference points	9.091	83.33	ns
t_{p_wh}	Pulse duration low, PCLK	50% reference points	2.286		ns
t_{p_wl}	Pulse duration high, PCLK	50% reference points	2.286		ns
t_{p_su}	Setup time – HSYNC, DATEN, PDATA(23:0) valid before the active edge of PCLK	50% reference points	0.8		ns
t_{p_h}	Hold time – HSYNC, DATEN, PDATA(23:0) valid after the active edge of PCLK	50% reference points	0.8		ns
t_{t_clk}	Transition time – PCLK	20% to 80% reference points		6	ns
t_t	Transition time – all other signals on this port	20% to 80% reference points		6	ns
f_{spread}	Supported Spread Spectrum range	Percent of f_{clock} rate	–1%	+1%(1)	
f_{mod}	Supported Spread Spectrum Modulation Frequency(1) (2)		25	65(3)	kHz
t_{p_clkjit}	Clock jitter, PCLK			t_{p_clkper} – 5.414	ps

(1) This value is limited by the maximum clock frequency for f_{clock} (that is, if f_{clock} = max clock freq, then f_{spread} max = 0%).
(2) Modulation Waveforms supported: Sine and Triangle.
(3) Spread spectrum modulation tested at a maximum of 35 kHz. Simulated up to 65 kHz.

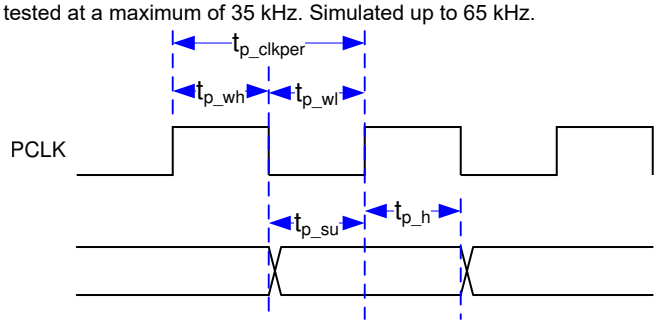

図 5-3. Parallel Interface General Timing

5.14 OpenLDI Interface General Timing Requirements

The DLPC23x-Q1 ASIC input interface supports a subset of the industry standard OpenLDI (FPD-Link I) interface (Open LVDS Display Interface Specification v0.95 - May 13, 1999). Specifically, from the standard, the ASIC supports the 24-bit, Single Pixel Format, using the Unbalanced Operating Mode and Pixel Mapping.

			MIN	NOM	MAX	UNIT
f_{clock}	Clock frequency, L1_CLK_P/N, L2_CLK_P/N		20.0		110	MHz
t_p	Clock period, PCLK	50% reference points	9.091		50	ns
t_{skew}	Skew Margin (between clock and data)	f_{clock} = 85 MHz	–400 (5)	0	400(5)	ps
t_{skew_ports}	Clock to clock skew margin between ports on same ASIC, and between ports on different ASICs				1	clocks
t_{ip0}	Input data position 1		$(t_p / 7) – t_{skew}$	$(t_p / 7)$	$(t_p / 7) + t_{skew}$	ps
t_{ip6}	Input data position 2		$2 * (t_p / 7) – t_{skew}$	$2 * (t_p / 7)$	$2 * (t_p / 7) + t_{skew}$	ps
t_{ip5}	Input data position 3		$3 * (t_p / 7) – t_{skew}$	$3 * (t_p / 7)$	$3 * (t_p / 7) + t_{skew}$	ps
t_{ip4}	Input data position 4		$4 * (t_p / 7) – t_{skew}$	$4 * (t_p / 7)$	$4 * (t_p / 7) + t_{skew}$	ps
t_{ip3}	Input data position 5		$5 * (t_p / 7) – t_{skew}$	$5 * (t_p / 7)$	$5 * (t_p / 7) + t_{skew}$	ps
t_{ip2}	Input data position 6		$6 * (t_p / 7) – t_{skew}$	$6 * (t_p / 7)$	$6 * (t_p / 7) + t_{skew}$	ps

Copyright © 2024 Texas Instruments Incorporated

5.14 OpenLDI Interface General Timing Requirements (続き)

The DLPC23x-Q1 ASIC input interface supports a subset of the industry standard OpenLDI (FPD-Link I) interface (Open LVDS Display Interface Specification v0.95 - May 13, 1999). Specifically, from the standard, the ASIC supports the 24-bit, Single Pixel Format, using the Unbalanced Operating Mode and Pixel Mapping.

			MIN	NOM	MAX	UNIT
t_{jitter}	Input Jitter Tolerance (cycle to cycle, peak to peak)				100	ps
f_{spread}	Supported Spread Spectrum range	percent of f_{clock} rate	–1%(1)		+1%(2)	
f_{mod}	Supported Spread Spectrum Modulation Frequency(3) (4)		25		65	kHz

(1) This value is limited by the minimum clock frequency for f_{clock} (that is, if f_{clock} = min clock freq, then f_{spread} max = 0%).
(2) This value is limited by the maximum clock frequency for f_{clock} (that is, if f_{clock} = max clock freq, then f_{spread} max = 0%).
(3) Modulation Waveforms supported: Sine and Triangle.
(4) Spread spectrum on OpenLDI interfaces was simulated, but not tested.
(5) t_{skew} for other f_{clock} values can be estimated by +/- t_{skew} = -7.143 × f_{clock} + 1007.1 - (t_{jitter} - 100)

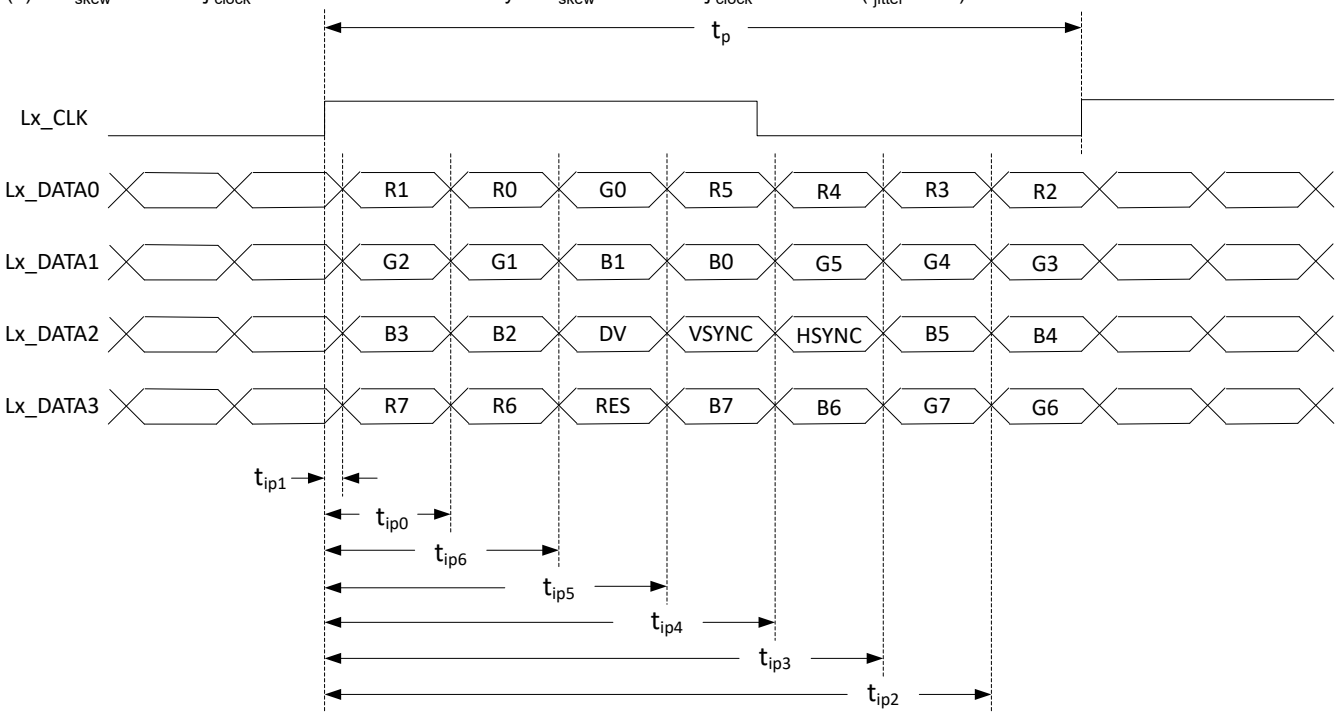

図 5-4. OpenLDI Interface Timing

Copyright © 2024 Texas Instruments Incorporated

5.15 Parallel/OpenLDI Interface Frame Timing Requirements

See[(1)]

			MIN	MAX	UNIT
VSYNC	Vertical Sync Rate (for the specified active source resolution)	*セクション 6.2.1* for supported resolutions.	58	61	Hz
t_{p_vsw}	Pulse duration – VSYNC high	50% reference points	1		lines
t_{p_vbp}	Vertical back porch (VBP) – time from the leading edge of VSYNC to the leading edge HSYNC for the first active line (includes t_{p_vsw}).	50% reference points	2		lines
t_{p_vfp}	Vertical front porch (VFP) – time from the leading edge of the HSYNC following the last active line in a frame to the leading edge of VSYNC	50% reference points	1		lines
t_{p_tvb}	Total vertical blanking – time from the leading edge of HSYNC following the last active line of one frame to the leading edge of HSYNC for the first active line in the next frame. (This is equal to the sum of VBP (t_{p_vbp}) + VFP (t_{p_vfp}))	50% reference points	14		lines
t_{p_hsw}	Pulse duration – HSYNC high	50% reference points	8		PCLKs
t_{p_hbp}	Horizontal back porch – time from rising edge of HSYNC to rising edge of DATEN (includes t_{p_hsw})	50% reference points	9		PCLKs
t_{p_hfp}	Horizontal front porch – time from falling edge of DATEN to rising edge of HSYNC	50% reference points	8		PCLKs
t_{p_thb}	Total horizontal blanking	50% reference points	64		PCLKs
TPPL	Total Pixels Per Line			8191	Pixels

(1) While these requirements are not specific to the OpenLDI interface, they are appropriate for any source that drives an OpenLDI transmitter connected to the ASIC OpenLDI interface.

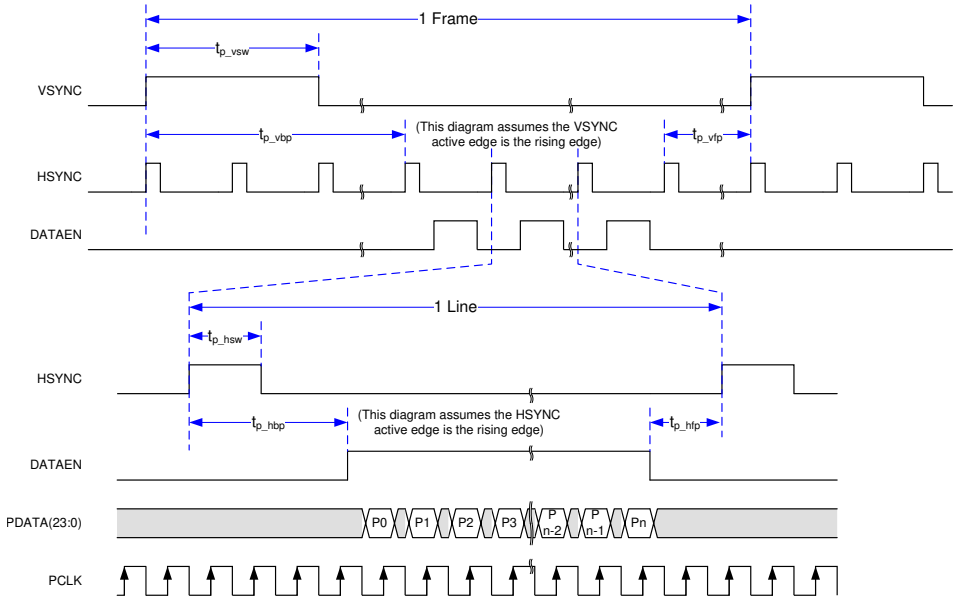

図 5-5. Source Frame Timing

5.16 Host/Diagnostic Port SPI Interface Timing Requirements

The DLPC23x-Q1 ASIC Host/Diagnostic SPI port interface timing requirements are shown below.(1)

			MIN	MAX	UNIT
f_{clock}	Clock frequency, HOST_SPI_CLK (50% reference points)			10.00	MHz
t_{p_wh}	Pulse duration low, HOST_SPI_CLK (50% reference points)		45.0		ns
t_{p_wl}	Pulse duration high, HOST_SPI_CLK (50% reference points)		45.0		ns
t_t	Transition time – all input signals	20% to 80% reference points		6	ns
t_{p_su}	Setup time – HOST_SPI_DIN valid before HOST_SPI_CLK capture edge (50% reference points)		10.0		ns
t_{p_h}	Hold time – HOST_SPI_DIN valid after HOST_SPI_CLK capture edge	50% reference points	18.0		ns
t_{csz_su}	SPI CSZ Setup Time (i.e. CSZ falling edge before first (leading) edge of CLK)		25.0		ns
t_{csz_h}	SPI CSZ Hold Time (i.e. CSZ rising edge after last (trailing) edge of CLK)		25.0		ns
t_{out}	Clock-to-Data out - HOST_SPI_DOUT from HOST_SPI_CLK launch edge (50% reference points)		0.0	35.0	ns

(1) The DLPC23x-Q1 Host/Diagnostic Port SPI interface supports SPI Modes 0, 1, 2, and 3 (that is, both clock polarities and both clock phases). The HOST_SPI_MODE input must be set to match the SPI mode being used.

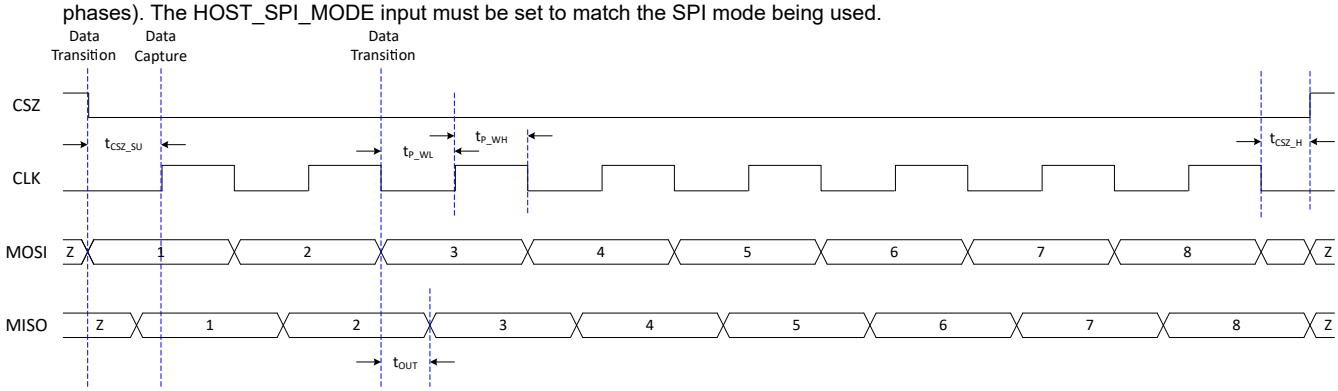

図 5-6. Host/Diagnostic Port SPI Interface Timing (Example: SPI Mode 0 (Clock Polarity = 0, Clock Phase = 0))

5.17 Host/Diagnostic Port I²C Interface Timing Requirements

The DLPC23x-Q1 ASIC Host/Diagnostic I²C port interface timing requirements are shown below.(1) (2)

			MIN	MAX	UNIT
f_{clock}	Clock frequency, HOST_I²C_SCL (50% reference points)	Fast-Mode		400	kHz
		Standard Mode		100	
C_L	Capacitive Load (for each bus line)			200	pF

(1) Meets all I²C timing per the I²C Bus Specification (except for capacitive loading as specified above). For reference see version 2.1 of the Phillips/NXP specification.
(2) The maximum clock frequency does not account for rise time, nor added capacitance of PCB or external components which can adversely impact this value.

Copyright © 2024 Texas Instruments Incorporated

5.18 Flash Interface Timing Requirements

The DLPC23x-Q1 ASIC flash memory interface consists of an SPI serial interface. See *セクション 7.3.4*.

(1)			MIN	MAX	UNIT
f_{clock}	Clock frequency, FLSH_SPI_CLK	When VCC3IO_FLSH = 3.3VDC	9.998	50.01(2)	MHz
t_{p_clkper}	Clock period, FLSH_SPI_CLK (50% reference points)	When VCC3IO_FLSH = 3.3VDC	20.0	100	ns
t_{p_wh}	Pulse duration low, FLSH_SPI_CLK (50% reference points)	When VCC3IO_FLSH = 3.3VDC	9		ns
t_{p_wl}	Pulse duration high, FLSH_SPI_CLK (50% reference points)	When VCC3IO_FLSH = 3.3VDC	9		ns
t_t	Transition time – all input signals	20% to 80% reference points		6	ns
t_{p_su}	Setup time – FLSH_SPI_DIO[3:0] valid before FLSH_SPI_CLK falling edge (50% reference points)	When VCC3IO_FLSH = 3.3VDC	7.0		ns
t_{p_h}	Hold time – FLSH_SPI_DIO[3:0] valid after FLSH_SPI_CLK falling edge	50% reference points	0.0		ns
t_{p_clqv}	FLSH_SPI_DIO[3:0] output delay valid time (with respect to falling edge of FLSH_SPI_CLK or falling edge of FLSH_SPI_CSZ) (50% reference points)	When VCC3IO_FLSH = 3.3VDC	–3.0	3.0	ns

(1) The DLPC23x-Q1 communicates with flash devices using a slight variant of SPI Transfer Mode 0 (that is, clock polarity = 0, clock phase = 0). Instead of capturing MISO data on the clock edge opposite from that used to transmit MOSI data, the DLPC23x-Q1 captures MISO data on the same clock edge used to transmit the next MOSI data. As such, the DLPC23x-Q1 Flash SPI interface requires that MISO data from the flash device remain active until the end of the full clock cycle to allow the last data bit to be captured. This is shown in 図 5-8.

(2) The actual maximum clock rate driven from the DLPC23x-Q1 can be slightly less than this value.

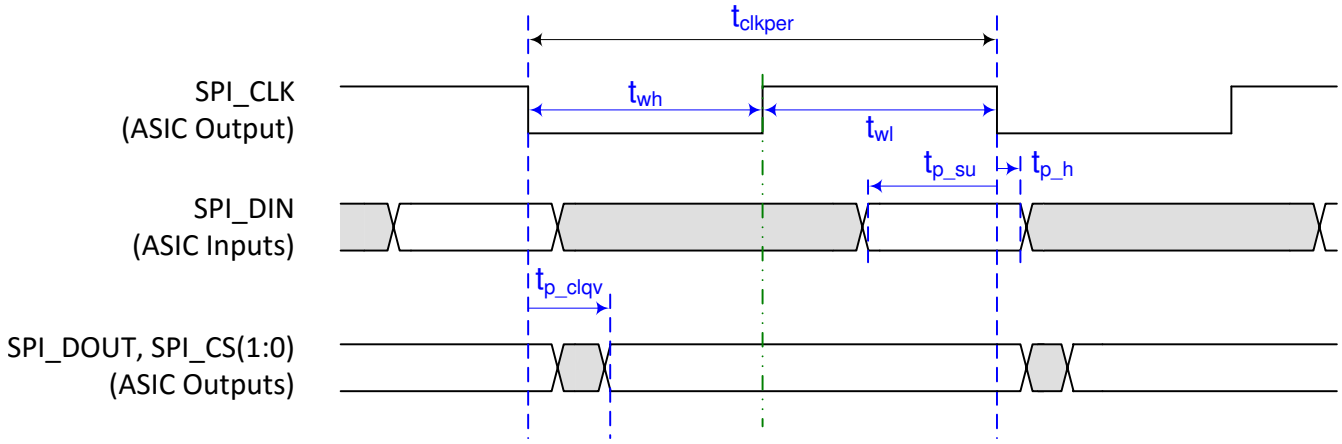

図 5-7. Flash Interface Timing

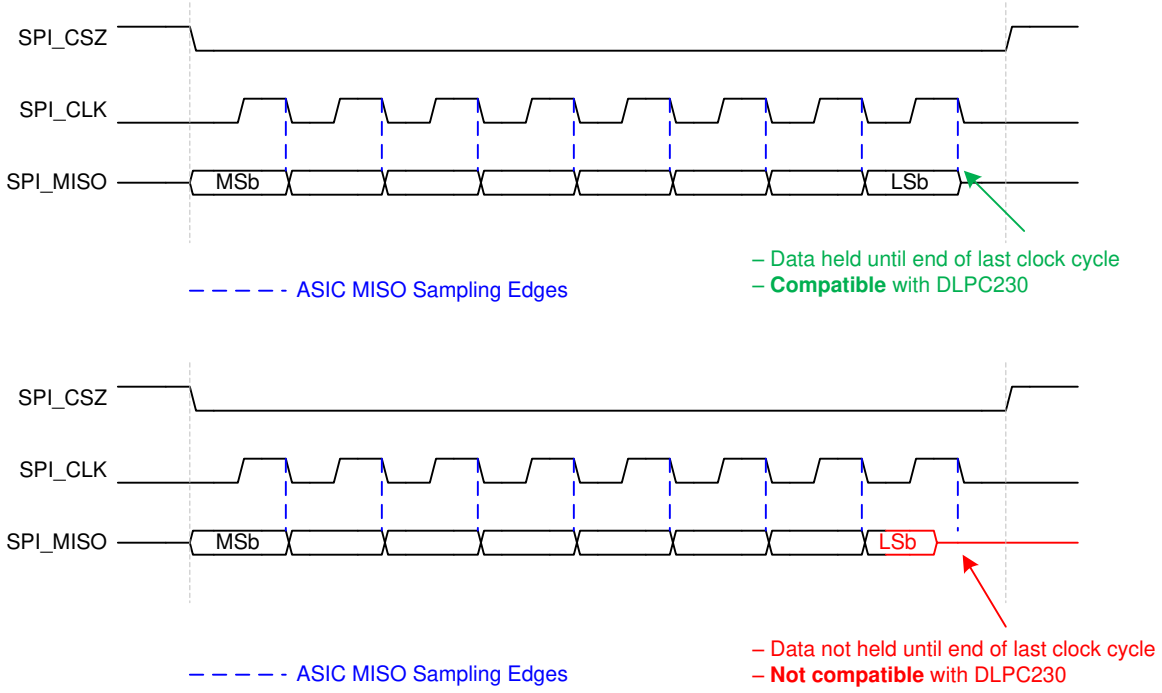

図 5-8. Flash Interface Data Capture Requirements

Copyright © 2024 Texas Instruments Incorporated

5.19 TPS99000-Q1 SPI Interface Timing Requirements

The DLPC23x-Q1 ASIC to TPS99000-Q1 interface consists of an SPI serial interface.

(1)			MIN	MAX	UNIT
f_{clock}	Clock frequency, PMIC_SPI_CLK		9.998	30.006	MHz
t_{p_clkper}	Clock period, PMIC_SPI_CLK (50% reference points)		33.3	100	ns
t_{p_wh}	Pulse duration high, PMIC_SPI_CLK (50% reference points)		11.5		ns
t_{p_wl}	Pulse duration low, PMIC_SPI_CLK (50% reference points)		11.5		ns
t_t	Transition time – all input signals	20% to 80% reference points		6	ns
t_{p_su}	Setup time – PMIC_SPI_DIN valid before PMIC_SPI_CLK falling edge (50% reference points)		7.0		ns
t_{p_h}	Hold time – PMIC_SPI_DIN valid after PMIC_SPI_CLK falling edge	50% reference points	0.0		ns
t_{p_clqv}	PMIC_SPI_DOUT output delay (valid) time (with respect to falling edge of PMIC_SPI_CLK or falling edge of PMIC_SPI_CSZ0) (50% reference points)		–3.0	3.0	ns

(1) The DLPC23x-Q1 communicates with the TPS99000-Q1 using a slight variant of SPI Transfer Mode 0 (that is, clock polarity = 0, clock phase = 0). Instead of capturing MISO data on the clock edge opposite from that used to transmit MOSI data, the DLPC23x-Q1 captures MISO data on the same clock edge used to transmit the next MOSI data. As such, the DLPC23x-Q1 SPI interface to the TPS99000-Q1 requires that MISO data from the TPS99000-Q1 remain active until the end of the full clock cycle to allow the last data bit to be captured. This is shown in 図 5-12.

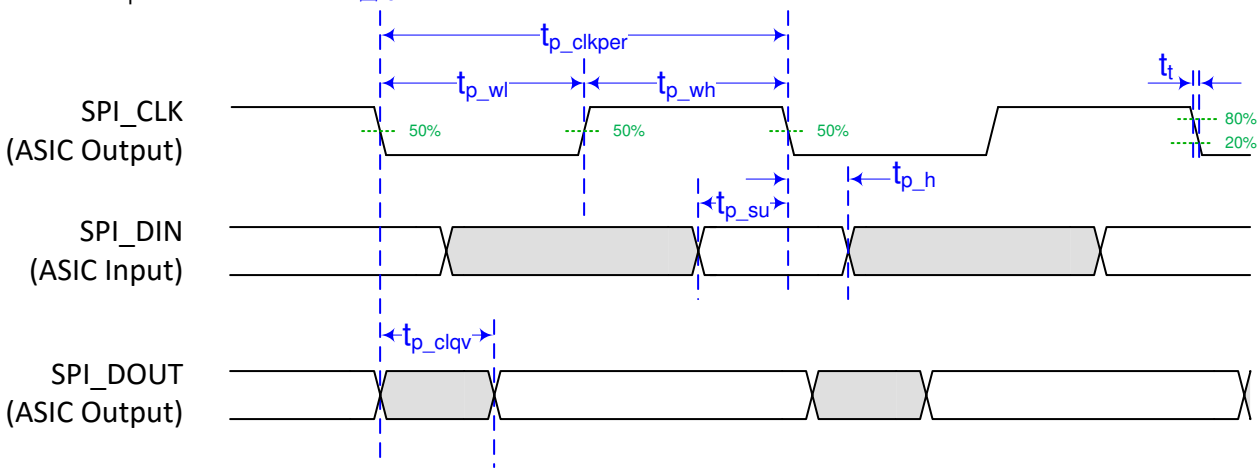

図 5-9. TPS99000-Q1 Interface Timing

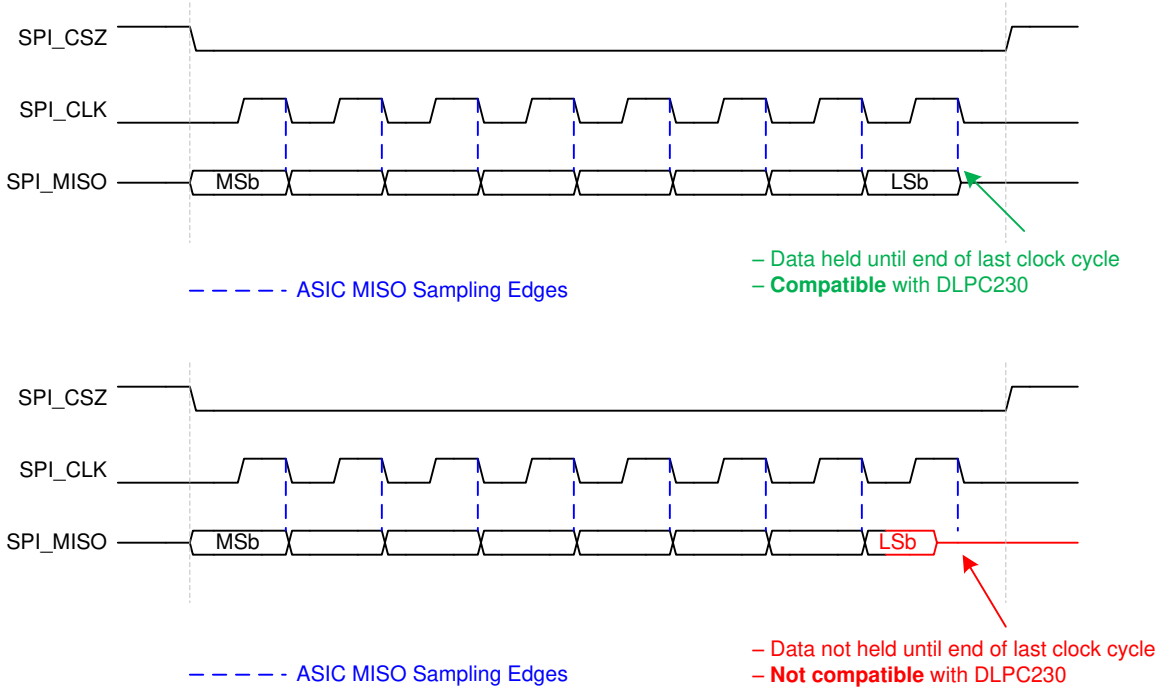

図 5-10. TPS99000-Q1 Interface Data Capture Requirements

Copyright © 2024 Texas Instruments Incorporated

5.20 TPS99000-Q1 AD3 Interface Timing Requirements

The DLPC23x-Q1 ASIC to TPS99000-Q1 AD3 interface is used to retrieve ADC measurements from the TPS99000-Q1. The interface is similar to SPI and includes a clock, MOSI, and MISO signal.

(1) (2) (3)			MIN	MAX	UNIT
f_{clock}	Clock frequency, PMIC_AD3_CLK		29.326	30.006	MHz
t_{p_clkper}	Clock period, PMIC_AD3_CLK (50% reference points)		33.327	34.100	ns
t_{p_wh}	Pulse duration high, PMIC_AD3_CLK (50% reference points) (Referenced to t_{p_clkper})		40%		
t_{p_wl}	Pulse duration low, PMIC_AD3_CLK (50% reference points) (Referenced to t_{p_clkper})		40%		
t_t	Transition time – all input signals	20% to 80% reference points		6	ns
t_{p_su}	Setup time – PMIC_AD3_MISO valid before PMIC_AD3_CLK falling edge (50% reference points)		14.5		ns
t_{p_h}	Hold time – PMIC_AD3_MISO valid after PMIC_AD3_CLK falling edge (50% reference points)		0		ns
t_{p_clqv}	PMIC_AD3_MOSI output delay (valid) time (with respect to falling edge of PMIC_AD3_CLK) (50% reference points)		–2.0	2.0	ns

(1) PMIC_AD3_MOSI ((DLPC23x-Q1) Output / (TPS99000-Q1) Input) is transmitted on the falling edge of PMIC_AD3_CLK.
(2) PMIC_AD3_MISO ((DLPC23x-Q1) Input / (TPS99000-Q1) Output) is captured on the rising edge of PMIC_AD3_CLK.
(3) PMIC_AD3_CLK is used as the primary TPS99000-Q1 system clock in addition to supporting the AD3 interface.

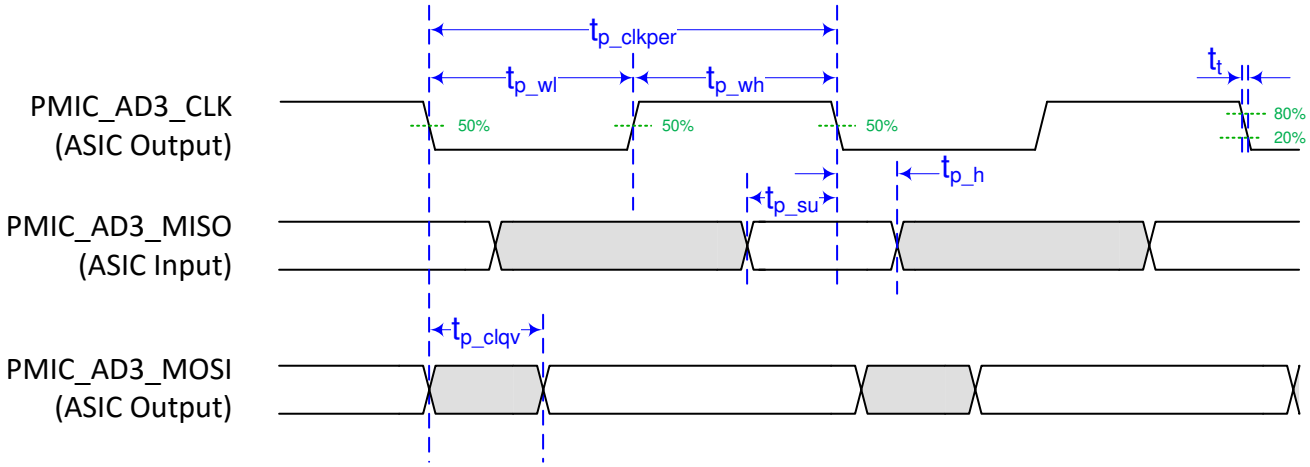

図 5-11. TPS99000-Q1 AD3 Interface Timing

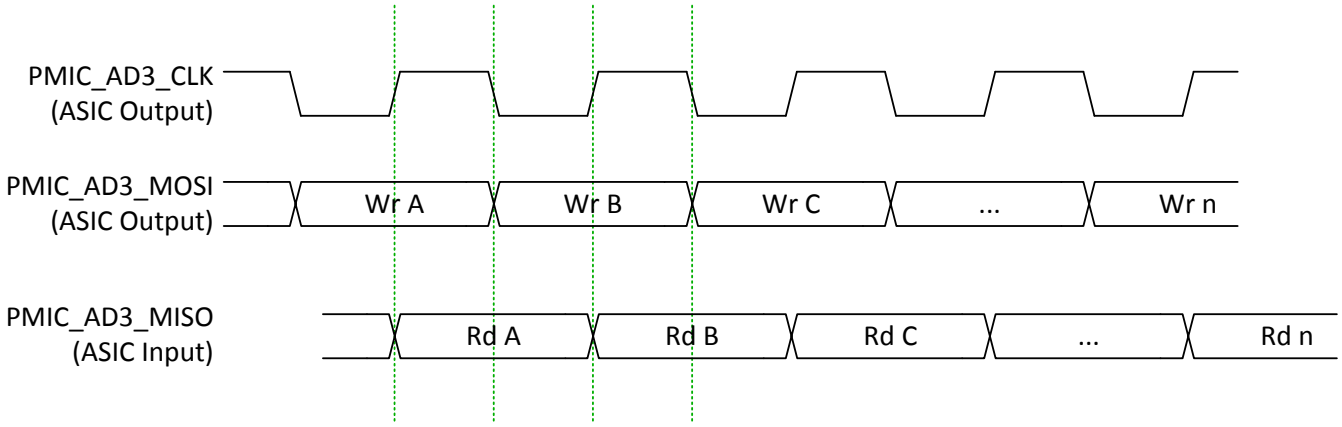

図 5-12. TPS99000-Q1 AD3 Data Capture and Transition

Copyright © 2024 Texas Instruments Incorporated

5.21 DLPC23x-Q1 I²C Port Interface Timing Requirements

The DLPC23x-Q1 Controller (for example, DLPC23x-Q1 to TMP411A) I²C port interface timing requirements are shown below.

(1) (2)			MIN	MAX	UNIT
f_{clock}	Clock frequency, MSTR_SCL (50% reference points)	Fast-Mode		400	kHz
		Standard Mode		100	
C_L	Capacitive Load (for each bus line)			200	pF

(1) Meets all I²C timing per the I²C Bus Specification (except for Capacitive Loading as specified above).
(2) The maximum clock frequency does not account for rise time, nor added capacitance of PCB or external components, which can adversely impact this value.

5.22 Chipset Component Usage Specification

TI DLP® chipsets include a DMD and one or more controllers. Reliable function and operation of TI DMDs requires that they be used in conjunction with all of the other components in the applicable chipset, including those components that contain or implement TI DMD control technology, such as the DLPC23x-Q1. TI DMD control technology is the TI technology and devices for operating or controlling a DLP® products DMD.

6 Parameter Measurement Information

6.1 HOST_IRQ Usage Model

In the DLPC23x-Q1, the Host_IRQ signal is used to serve as an indication that a serious system error has occurred for which the ASIC has executed an emergency shutdown. The specific errors that precipitated the shutdown can be retrieved through the Host Command and Control interface. The actions that are taken by the ASIC for an emergency shutdown are:

- LEDs are disabled.
- The DMD is parked and powered-down.
- The ASIC operational mode is transitioned to Standby.
- The precipitating errors are captured for later review.
- The Host_IRQ signal is set to a high state.

To recover from an emergency shutdown, the system will require a full power cycle (deassertion of PROJ_ON). The host must obtain the error history from the ASIC prior to this full reset, as the reset will remove all error history from the system.

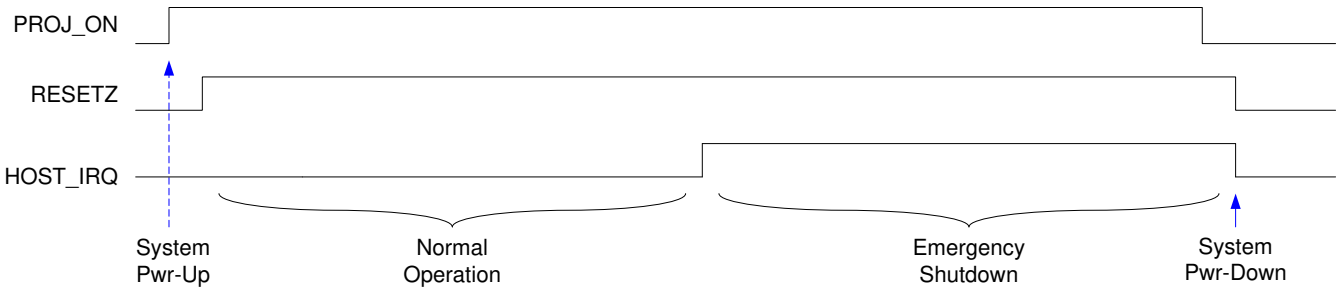

図 6-1. Host IRQ Timing

6.2 Input Source

The video input source can be configured to accomodate various desired input resolutions. Image processing such as scaling and line replication can be applied to achieve the necessary display resolution. The desired input resolution can depend on product configuration.

For information on how the input image is displayed, refer to the *DLPC230-Q1 / DLPC230S-Q1 Programmer's Guide for Display Applications* or *DLPC230-Q1 Programmer's Guide for Light Control Applications.*

6.2.1 Supported Input Sources

The supported sources with typical timings are shown in 表 6-1. These typical timing examples do not minimize blanking or pixel clock rate. Refer to *セクション 5.15* for minimum timing specifications.

表 6-1. Typical Timing for Supported Source Resolutions

HORIZONTAL RESOLUTION	VERTICAL RESOLUTION	HORIZONTAL BLANKING				VERTICAL BLANKING				VERTICAL RATE (Hz)	PIXEL CLOCK (MHz)
		TOTAL[1]	SYNC (PIXEL CLOCKS)	BACK PORCH (PIXEL CLOCKS)	FRONT PORCH (PIXEL CLOCKS)	TOTAL[1]	SYNC (LINES)	BACK PORCH (LINES)	FRONT PORCH (LINES)		
576	288	322	8	154	160	181	8	83	90	60	25.270
1152	576	80	8	32	40	25	8	14	3	60	44.426
1152	1152	80	8	32	40	33	8	6	19	60	87.595
480	240	420	32	80	308	230	10	6	214	60	25.35
960	480	240	96	120	24	20	10	7	3	60	36.000
960	960	160	8	80	72	28	10	15	3	60	66.394
1358	566	92	8	32	52	44	10	31	3	60	53.050

Copyright © 2024 Texas Instruments Incorporated

表 6-1. Typical Timing for Supported Source Resolutions (続き)

HORIZONTAL RESOLUTION	VERTICAL RESOLUTION	HORIZONTAL BLANKING				VERTICAL BLANKING				VERTICAL RATE (Hz)	PIXEL CLOCK (MHz)
		TOTAL[(1)]	SYNC (PIXEL CLOCKS)	BACK PORCH (PIXEL CLOCKS)	FRONT PORCH (PIXEL CLOCKS)	TOTAL[(1)]	SYNC (LINES)	BACK PORCH (LINES)	FRONT PORCH (LINES)		
1220	610	156	8	80	68	19	10	6	3	60	51.930

(1) Sync clocks/lines are counted as a part of total blanking in these examples (Total Blanking = sync + back porch + front porch). Note that the specifications in *セクション 5.15* include sync width as part of back porch (Total Blanking = back porch + front porch).

6.2.2 Parallel Interface Supported Data Transfer Formats

- 24-bit RGB888 on a 24 data wire interface

6.2.2.1 OpenLDI Interface Supported Data Transfer Formats

- 1X 24-bit RGB888 on a 5-lane differential interface

セクション 6.2.2.1.1 shows the required OpenLDI bus mapping for the supported data transfer formats.

6.2.2.1.1 OpenLDI Interface Bit Mapping Modes

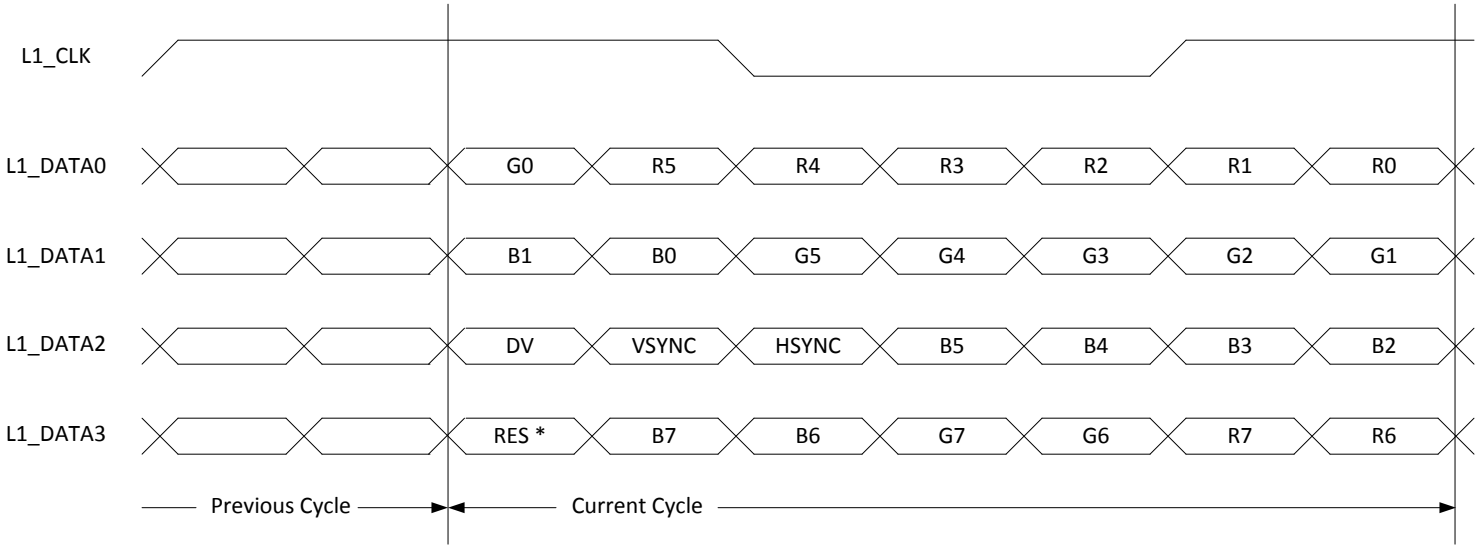

A. * = Use is undefined/reserved

図 6-2. OpenLDI 24-bit Single Port

Copyright © 2024 Texas Instruments Incorporated

7 Detailed Description

7.1 Overview

The automotive DLP® Products chipset consists of three components – the DMD (DLP553x-Q1 or DLP4621-Q1), the DLPC23x-Q1, and the TPS99000-Q1. The DLPC23x-Q1 is the display controller for the DMD - it formats incoming video and controls the timing of the DMD. It also controls TPS99000-Q1 light source signal timing to coordinate with DMD timing to synchronize light output with DMD mirror movement. The DLPC23x-Q1 is designed for automotive applications with a wide operating temperature range and diagnostic features to identify and correct specific system-level failures. The DLPC23x-Q1 provides interfaces such as OpenLDI (video) and SubLVDS (DMD interface) to minimize power consumption and EMI. Applications include head-up display (HUD) and adaptive high beam and smart headlight.

7.2 Functional Block Diagram

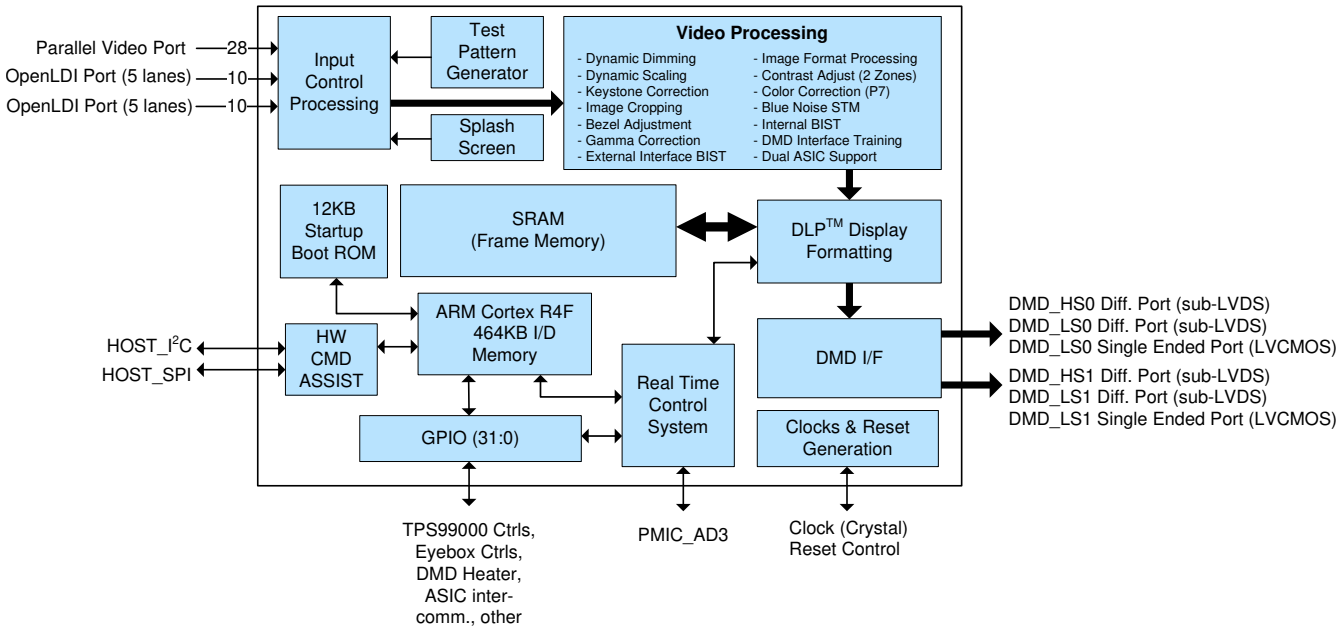

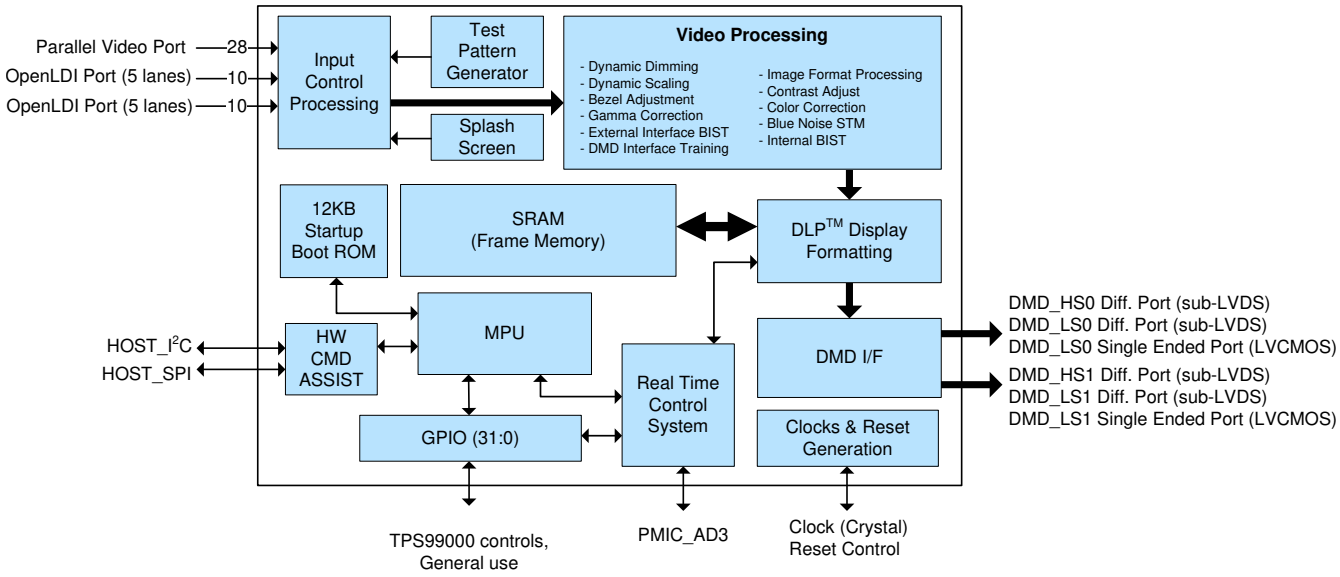

Copyright © 2018, Texas Instruments Incorporated

7.3 Feature Description

7.3.1 Parallel Interface

The parallel interface complies with standard graphics interface protocol, which includes a vertical sync signal (VSYNC), horizontal sync signal (HSYNC), data valid signal (DATEN), a 24-bit data bus (PDATA_x), and a pixel clock (PCLK). 図 5-5 shows the relationship of these signals.

注

VSYNC must remain active at all times. If VSYNC is lost, the DMD must be transitioned to a safe state. When the system detects a VSYNC loss, it will switch to a test pattern or splash image as specified in flash by the Host.

The parallel interface supports intra-interface bit multiplexing (specified in flash) that can help with board layout as needed. The intra-interface bit multiplexing allows the mapping of any PDATA_x input to any internal data bus bit. When utilizing this feature, each unique input pin can only be mapped to one unique destination bit. The typical mapping is shown in 図 7-1. An example of an alternate mapping is shown in 図 7-2.

Copyright © 2024 Texas Instruments Incorporated

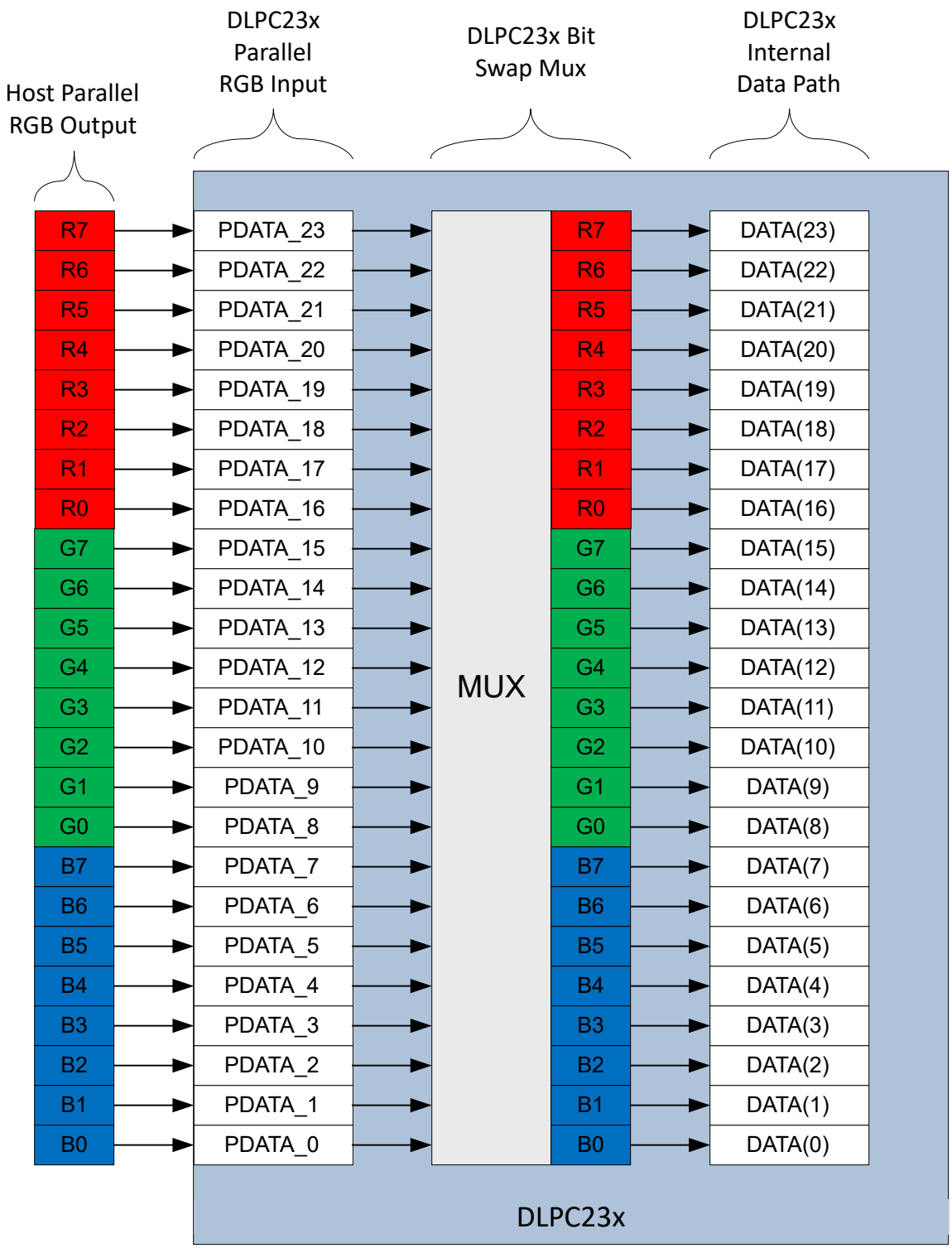

図 7-1. Example of Typical Parallel Port Bit Mapping

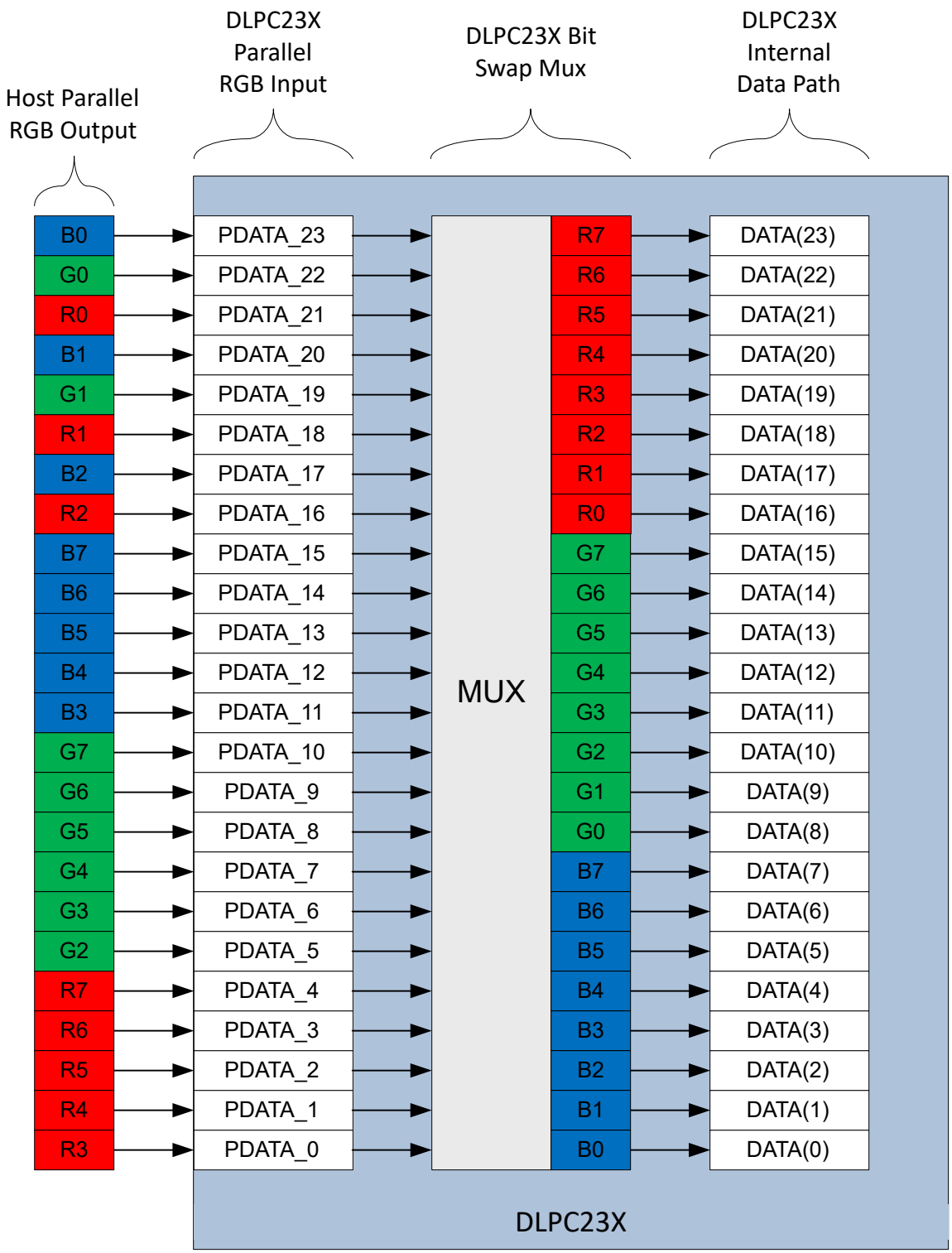

図 7-2. Example of Alternate Parallel Port Bit Mapping

7.3.2 OpenLDI Interface

Each DLPC23x-Q1 OpenLDI interface port supports intra-port lane multiplexing (specified in flash) that can help with board layout as needed. The intra-port multiplexing allows the mapping of any Lx_DATA lane pair to any internal data lane pair. When utilizing this feature, each unique lane pair can only be mapped to one unique

Copyright © 2024 Texas Instruments Incorporated

destination lane pair. The typical lane mapping is shown in 図 7-3. An example of an alternate lane mapping is shown in 図 7-4.

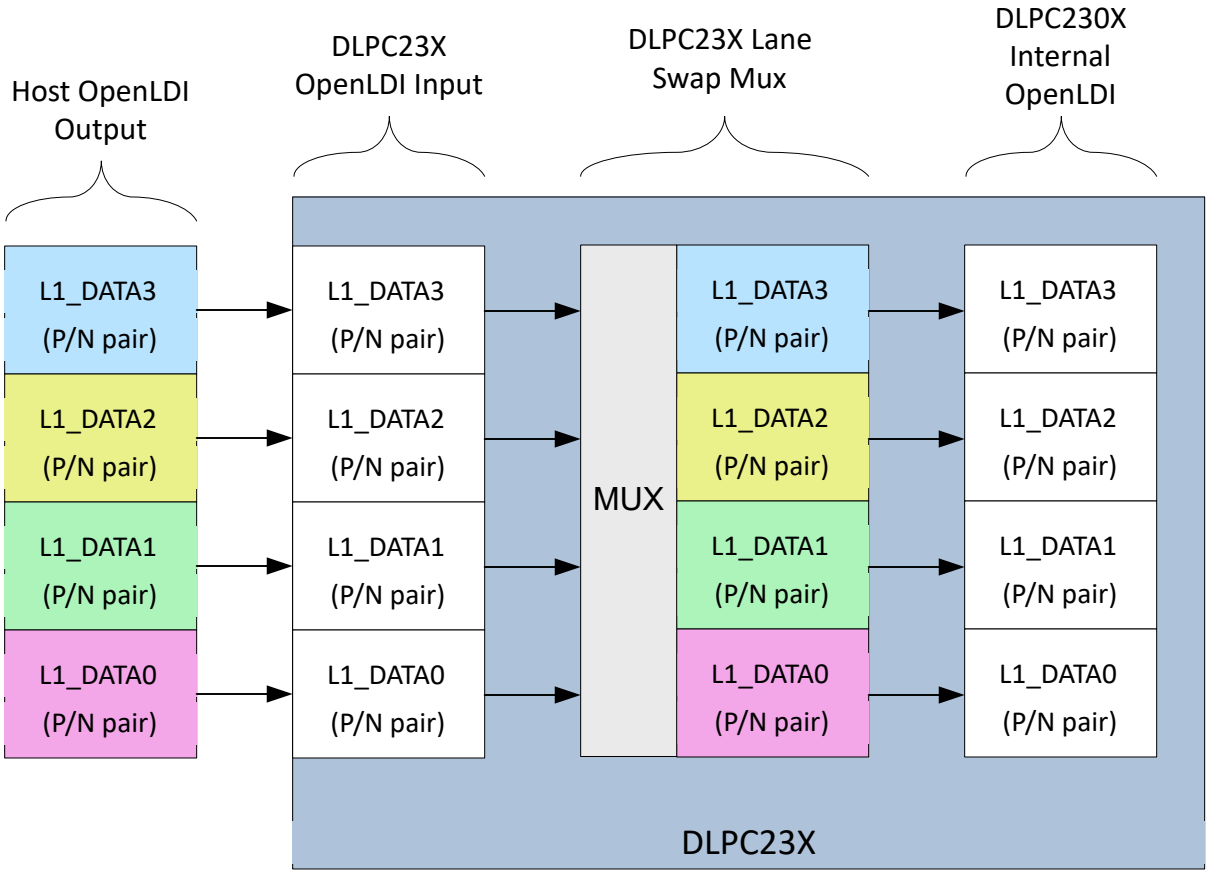

図 7-3. Example of Typical OpenLDI Port Lane Mapping

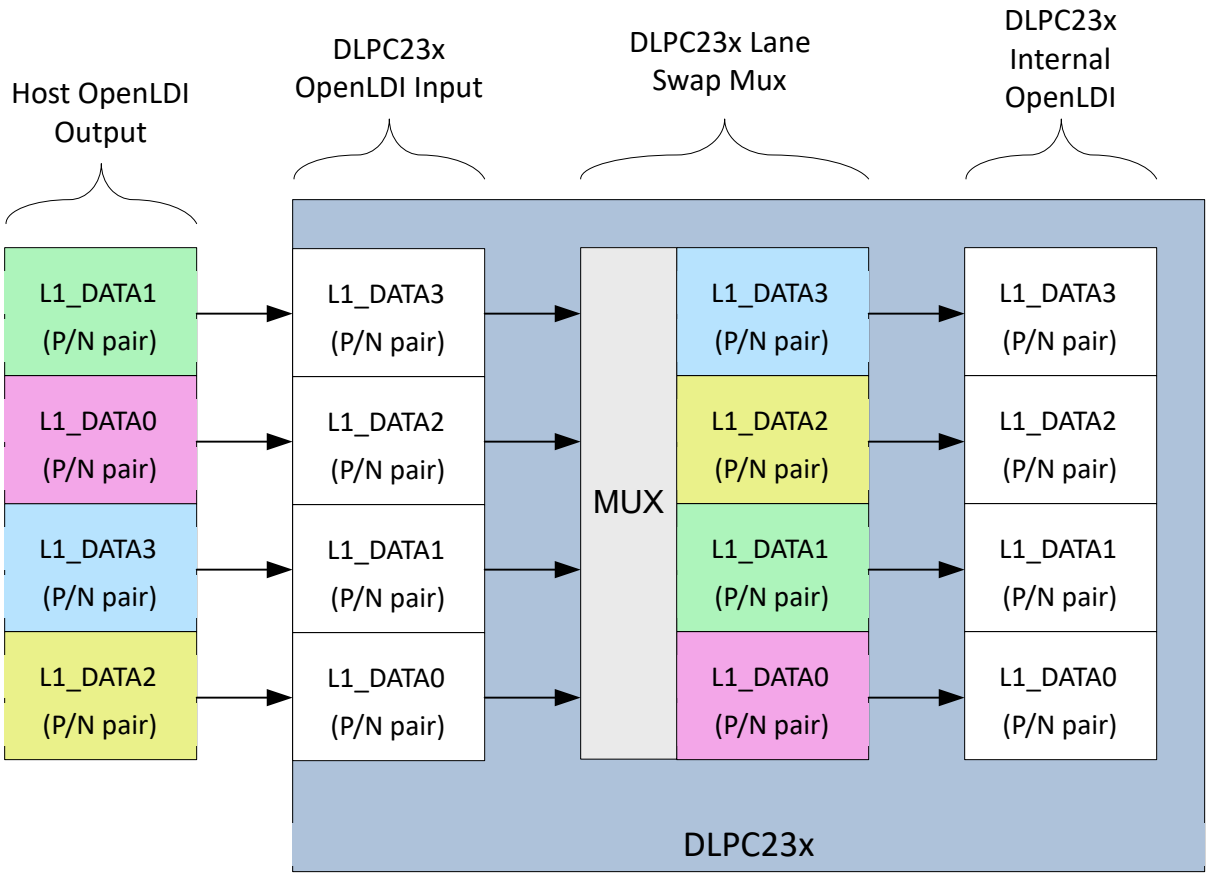

図 7-4. Example of Alternate OpenLDI Port Lane Mapping

Copyright © 2024 Texas Instruments Incorporated

7.3.3 DMD (SubLVDS) Interface

The DLPC23x-Q1 ASIC DMD interface supports two high-speed SubLVDS output-only interfaces for data transmission, a single low-speed SubLVDS output-only interface for command write transactions, as well as a low-speed single-ended input interface used for command read transactions. The DLPC23x-Q1 supports a limited number of DMD interface swap configurations (specified in Flash) that can help board layout by remapping specific combinations of DMD interface lines to other DMD interface lines as needed. 表 7-1 shows some of the options available.

表 7-1. ASIC to 8-Lane DMD Pin Mapping Options

DLPC23x-Q1 ASIC PIN ROUTING OPTIONS TO DMD PINS				DMD PINS
BASELINE	FULL FLIP HS0/HS1 180	SWAP HS0 PORT WITH HS1 PORT	SWAP HS0 PORT WITH HS1 PORT AND FULL FLIP 180	
HS0_WDATA0_P HS0_WDATA0_N	HS0_WDATA7_P HS0_WDATA7_N	HS1_WDATA0_P HS1_WDATA0_N	HS1_WDATA7_P HS1_WDATA7_N	D_AP(0) D_AN(0)
HS0_WDATA1_P HS0_WDATA1_N	HS0_WDATA6_P HS0_WDATA6_N	HS1_WDATA1_P HS1_WDATA1_N	HS1_WDATA6_P HS1_WDATA6_N	D_AP(1) D_AN(1)
HS0_WDATA2_P HS0_WDATA2_N	HS0_WDATA5_P HS0_WDATA5_N	HS1_WDATA2_P HS1_WDATA2_N	HS1_WDATA5_P HS1_WDATA5_N	D_AP(2) D_AN(2)
HS0_WDATA3_P HS0_WDATA3_N	HS0_WDATA4_P HS0_WDATA4_N	HS1_WDATA3_P HS1_WDATA3_N	HS1_WDATA4_P HS1_WDATA4_N	D_AP(3) D_AN(3)
HS0_WDATA4_P HS0_WDATA4_N	HS0_WDATA3_P HS0_WDATA3_N	HS1_WDATA4_P HS1_WDATA4_N	HS1_WDATA3_P HS1_WDATA3_N	D_AP(4) D_AN(4)
HS0_WDATA5_P HS0_WDATA5_N	HS0_WDATA2_P HS0_WDATA2_N	HS1_WDATA5_P HS1_WDATA5_N	HS1_WDATA2_P HS1_WDATA2_N	D_AP(5) D_AN(5)
HS0_WDATA6_P HS0_WDATA6_N	HS0_WDATA1_P HS0_WDATA1_N	HS1_WDATA6_P HS1_WDATA6_N	HS1_WDATA1_P HS1_WDATA1_N	D_AP(6) D_AN(6)
HS0_WDATA7_P HS0_WDATA7_N	HS0_WDATA0_P HS0_WDATA0_N	HS1_WDATA7_P HS1_WDATA7_N	HS1_WDATA0_P HS1_WDATA0_N	D_AP(7) D_AN(7)
HS1_WDATA0_P HS1_WDATA0_N	HS1_WDATA7_P HS1_WDATA7_N	HS0_WDATA0_P HS0_WDATA0_N	HS0_WDATA7_P HS0_WDATA7_N	D_BP(0) D_BN(0)
HS1_WDATA1_P HS1_WDATA1_N	HS1_WDATA6_P HS1_WDATA6_N	HS0_WDATA1_P HS0_WDATA1_N	HS0_WDATA6_P HS0_WDATA6_N	D_BP(1) D_BN(1)
HS1_WDATA2_P HS1_WDATA2_N	HS1_WDATA5_P HS1_WDATA5_N	HS0_WDATA2_P HS0_WDATA2_N	HS0_WDATA5_P HS0_WDATA5_N	D_BP(2) D_BN(2)
HS1_WDATA3_P HS1_WDATA3_N	HS1_WDATA4_P HS1_WDATA4_N	HS0_WDATA3_P HS0_WDATA3_N	HS0_WDATA4_P HS0_WDATA4_N	D_BP(3) D_BN(3)
HS1_WDATA4_P HS1_WDATA4_N	HS1_WDATA3_P HS1_WDATA3_N	HS0_WDATA4_P HS0_WDATA4_N	HS0_WDATA3_P HS0_WDATA3_N	D_BP(4) D_BN(4)
HS1_WDATA5_P HS1_WDATA5_N	HS1_WDATA2_P HS1_WDATA2_N	HS0_WDATA5_P HS0_WDATA5_N	HS0_WDATA2_P HS0_WDATA2_N	D_BP(5) D_BN(5)
HS1_WDATA6_P HS1_WDATA6_N	HS1_WDATA1_P HS1_WDATA1_N	HS0_WDATA6_P HS0_WDATA6_N	HS0_WDATA1_P HS0_WDATA1_N	D_BP(6) D_BN(6)
HS1_WDATA7_P HS1_WDATA7_N	HS1_WDATA0_P HS1_WDATA0_N	HS0_WDATA7_P HS0_WDATA7_N	HS0_WDATA0_P HS0_WDATA0_N	D_BP(7) D_BN(7)

7.3.4 Serial Flash Interface

The DLPC23x-Q1 uses an external SPI serial flash memory device for configuration and operational data. The minimum supported size is 16 Mb. Larger devices can be required based on operation data and splash image size. The maximum supported size is 128 Mb. It must be noted that the system will support 256 Mb and 512 Mb devices, however, only the first 128 Mb of space are used.

The external serial flash device is supported on a single SPI interface and mostly complies with industry standard SPI flash protocol (See 図 5-8). The Host will specify the maximum supported flash interface frequency (which can be based on device limits, system limits, and/or other factors) and the system will program the closest obtainable value less than or equal to this specified maximum.

The DLPC23x-Q1 ASIC flash must be connected to the designated SPI flash interface (FLSH_SPI_xxx) to enable support for system initialization, configuration, and operation.

The DLPC23x-Q1 must support any flash device that is compatible with the modes of operation, features, and performance as defined in this section.

表 7-2. SPI Flash Required Features or Modes of Operation

FEATURE	DLPC23x-Q1 REQUIREMENT	COMMENTS
SPI interface width	Single Wire, Two Wire, Four Wire	
SPI protocol	SPI mode 0	
Fast READ addressing	Auto-incrementing	
Programming mode	Page mode	
Page size	256 Bytes	
Sector (or Subsector) size	4 KB	Required erase granularity
Block structure	Uniform sector / Subsector	
Block protection bits	0 = Disabled (with Default = 0 = Disabled)	
Status register bit(0)	Write in progress (WIP) {also called flash busy}	
Status register bit(1)	Write enable latch (WEN)	
Status register bits(6:2)	A value of 0 disables programming protection	
Status register bit(7)	Status register write protect (SRWP)	
Status register bits(15:8) (expanded status register), or Secondary Status register	The DLPC23x-Q1 supports multi-byte status registers, as well as separate, additional status registers, but only for specific devices/register addresses. The supported registers and addresses are specified in 表 7-3.	

注意

The selected SPI flash device must block repeated status writes from being written to internal register. The boot application writes to the flash device status register once per 256 bytes during programming. Most flash devices discard status register writes when the status content does not change. Some flash parts, such as the Micron N25Q128A13ESFA0F, do not block status writes when the status data is repeated. This causes the status register to exceed its maximum write limit after several programming cycles, making them incompatible with the DLPC23x-Q1. Note that the main application does not write to the status register.

For each write operation, the DLPC23x-Q1 boot application executes the following:

1. Write enable command
2. Write status command (to unprotect memory)
3. Read status command to poll the successful execution of the write status (repeated as needed)
4. Write enable command
5. Program or erase command
6. Read status command (repeated as needed) to poll the successful execution of the program or erase operation
7. Write disable command (during programming; this is not performed after erase command.)

For each write operation, the DLPC23x-Q1 main application executes the following:

1. Write enable command

Copyright © 2024 Texas Instruments Incorporated

2. Program or erase command
3. Read status command (repeated as needed) to poll the successful execution of the program or erase operation
4. Write disable command (during programming; this is not performed after erase command)

The specific instruction op-code and timing compatibility requirements are listed in 表 7-3 and *Flash Interface Timing Requirements*. Note that DLPC23x-Q1 does not read the flash's full electronic signature ID and thus cannot automatically adapt protocol and clock rates based on the ID.

表 7-3. SPI Flash Instruction Op-Code and Access Profile Compatibility Requirements

SPI FLASH COMMAND	FIRST BYTE (OP-CODE)	SECOND BYTE	THIRD BYTE	FOURTH BYTE	FIFTH BYTE	SIXTH BYTE	NO. OF DUMMY CLOCKS	COMMENTS
Fast READ (1/1)	0x0B	ADDRS(0)	ADDRS(1)	ADDRS(2)	dummy	DATA(0)(1)	8	See 表 7-4.
Dual READ (1/2)	0x3B	ADDRS(0)	ADDRS(1)	ADDRS(2)	dummy	DATA(0)(1)	8	See 表 7-4.
2X READ (2/2)	0xBB	ADDRS(0)	ADDRS(1)	ADDRS(2)	dummy	DATA(0)(1)	4	See 表 7-4.
Quad READ (1/4)	0x6B	ADDRS(0)	ADDRS(1)	ADDRS(2)	dummy	DATA(0)(1)	8	See 表 7-4.
4X READ (4/4)	0xEB	ADDRS(0)	ADDRS(1)	ADDRS(2)	dummy	DATA(0)(1)	6	See 表 7-4.
Read status	0x05	n/a	n/a	STATUS(0)	STATUS(1)		0	Status(1) - Winbond only
Write status	0x01	STATUS(0)	STATUS(1)				0	Status(1) - Winbond only
Read Volatile Conf Reg	0x85	Data(0)					0	Micron Only
Write Volatile Conf Reg	0x81	Data(0)					0	Micron Only
Write Enable	0x06						0	
Write Disable	0x04						0	
Page program	0x02	ADDRS(0)	ADDRS(1)	ADDRS(2)	DATA(0)(1)		0	
Sector/Subsector Erase (4KB)	0x20	ADDRS(0)	ADDRS(1)	ADDRS(2)			0	
Full Chip Erase	0xC7						0	
Software Reset Enable	0x66							
Software Reset	0x99							
Read Id	0x9F	Data(0)	Data(1)	Data(2)				System only reads 1st three bytes.

(1) Only the first data byte is shown, data continues.

More detailed information on the various read operations supported are shown in 表 7-4.

表 7-4. SPI Flash Supported Read Operation Details

READ TYPE(2)	NUMBER OF LINES FOR OP-CODE(1)	NUMBER OF LINES FOR ADDRESS	NUMBER OF LINES FOR DUMMY BYTES	NUMBER OF LINES FOR RETURN DATA
Fast Read (1/1)	1	1	1	1
Dual Read (1/2)	1	1	1	2
2X Read (2/2)	1	2	2	2
Quad Read (1/4)	1	1	1	4
4X Read (4/4)	1	4	4	4

(1) System does not support Read op-codes being spread across more than one data line.
(2) Flash vendors have diverged in naming and controlling their various read capabilities. As such, the Host needs to be very careful to fully understand what is and what is not supported by the DLPC23x-Q1. In general, for the supported devices, the DLPC23x-Q1 only supports "Extended SPI" or "SPI Mode" (as defined in the various Flash Data Sheets). It does not support "Dual SPI Mode", "Quad SPI

Mode", "QPI", "QPI Mode", "Dual QPI", "Quad QPI", "DTR", or "DDR". If uncertain, most devices will support "Fast Reads" in a manner that is consistent with the DLPC23x-Q1.

表 7-5. DLPC23x-Q1 Compatible SPI Flash Device Options

DENSITY (M-BITS) (2) (3)	VENDOR	PART NUMBER	PACKAGE SIZE
3.3V Compatible Devices			
128	Micron(1)	MT25QL128ABA8ESF-OAAT	SO16
128	Macronix	MX25L12835FMR-10G	SO16
128	Macronix	MX25L12845GMR-10G	SO16
128	Macronix	MX25L12839FXDQ-10G	BGA25

(1) Care must be used when considering Numonyx versions of Micron serial flash devices as they typically do not have the 4KB sector size needed to be DLPC23x-Q1 compatible.
(2) For any devices not listed on this table, special care must be taken to insure that the requirements shown in 表 7-2 and 表 7-3 are met.
(3) The boot application writes to the flash device status register once per 256 bytes during programming. Most flash devices discard status register writes when the status content does not change. Some flash parts, such as Micron N25Q128A13ESFA0F, do not block status writes when the status data is repeated. This causes the status register to exceed its maximum write limit after several programming cycles, making them incompatible with the DLPC23x-Q1. Note that the main application does not write to the status register.

While the DLPC23x-Q1 supports a variety of clock rates and read operation types, it does have a minimum flash read bandwidth requirement which is shown in 表 7-6. This minimum read bandwidth can be met in any number of different ways, with the variables being clock rate and read type. The Host is required to select a flash device which can meet this minimum read bandwidth using the DLPC23x-Q1 supported interface capabilities. It must be noted that the Host will specify to the system (through flash parameter) the maximum supported clock rate as well as the supported read types for their selected flash device, with which the DLPC23x-Q1 SW will automatically select an appropriate combination to maximize this bandwidth (which must at least meet the minimum bandwidth requirement assuming a solution exists per the specified parameters).

表 7-6. SPI Flash Interface Bandwidth Requirements

PARAMETER		MIN	MAX	UNIT
$FLSH_RD_{BW}$	Flash Read Interface Bandwidth	47.00		Mbps

7.3.5 Serial Flash Programming

The serial flash can be programmed through the DLPC23x-Q1 using Host commands through the SPI or I^2C command and control interface.

7.3.6 Host Command and Diagnostic Processor Interfaces

The DLPC23x-Q1 provides an interface port for Host commands, as well as an interface port for a *diagnostic processor*. There are two external communication ports dedicated for this use: one SPI interface and one I^2C interface. The host specifies (through the ASIC input pin) which port is used for which purpose (for example, Host Command Interface → SPI, therefore "diagnostic processor"→ I^2C — or they can be reversed).

セクション 5.16 shows the timing requirements for the SPI interface. セクション 5.17shows the timing requirements for the I^2C interface. The I^2C target address pair is 36h/37h.

7.3.7 GPIO Supported Functionality

The DLPC23x-Q1 provides 32 general purpose I/O that are available to support a variety of functions for a number of different product configurations. In general, most of these I/O will only support one specific function based on a specific product configuration, although that function can be different for a different product configuration. There are also a few of these I/O that have been reserved for use by the Host for whatever function they can require. In addition, most of these I/O can also be made available for TI test and debug use. Definitions for the HUD and Headlight product configurations are shown in 表 7-7 and 表 7-8 .

Copyright © 2024 Texas Instruments Incorporated

表 7-7. GPIO Supported Functionality - HUD Product Configuration

GPIO	SIGNAL NAME	DESCRIPTION [1]
GPIO_00	PMIC_CNTRL_OUT (input)	LED control feedback from the TPS99000-Q1. An external pulldown resistor must be used (connects to TPS99000-Q1 Drive Enable).
GPIO_01	PMIC_SEQ_STRT (output)	Sequence start output from the DLPC23x-Q1. This must be connected to the TPS99000-Q1 to time LED related actions and shadow TPS99000-Q1 configuration registers. An external pulldown resistor must be used.
GPIO_02	PMIC_COMP_OUT (input)	LED optical comparison feedback. This is used to count light pulses during each frame. This signal is active-low. An external pulldown resistor must be used.
GPIO_03	PMIC_LED_SEN (output)	LED Shunt Enable - shunts current from LEDs to allow faster LED turn-off. An external pulldown resistor must be used.
GPIO_04	PMIC_LED_DEN (output)	LED FET Drive Enable - enables LED current switching and defines LED pulse length. An external pulldown resistor must be used.
GPIO_05	Reserved for Future Use	An external pulldown resistor must be used
GPIO_06	Host Available	Available for general host use through host commands
GPIO_07	Host Available	Available for general host use through host commands
GPIO_08	Host Available	Available for general host use through host commands
GPIO_09	Reserved for Future Use	An external pulldown resistor must be used
GPIO_10	Reserved for Future Use	An external pulldown resistor must be used
GPIO_11	Reserved for Future Use	An external pulldown resistor must be used
GPIO_12	Reserved for Future Use	An external pulldown resistor must be used
GPIO_13	Reserved for Future Use	An external pulldown resistor must be used
GPIO_14	Reserved for Future Use	An external pulldown resistor must be used
GPIO_15	PMIC_WD1 (output)	Periodic signal that the DLPC23x-Q1 processor generates during normal operation. TPS99000-Q1 monitors this signal and reports if this signal stops pulsing. An external pulldown resistor must be used.
GPIO_16	Reserved for Future Use	An external pulldown resistor must be used
GPIO_17	Host Available	Available for general host use through host commands
GPIO_18	Reserved for Future Use	An external pulldown resistor must be used
GPIO_19	Reserved for Future Use	An external pulldown resistor must be used
GPIO_20	Reserved for Future Use	An external pulldown resistor must be used
GPIO_21	Reserved for Future Use	An external pulldown resistor must be used
GPIO_22	Reserved for Future Use	An external pulldown resistor must be used
GPIO_23	Reserved for Future Use	An external pulldown resistor must be used
GPIO_24	Reserved for Future Use	An external pulldown resistor must be used
GPIO_25	Reserved for Future Use	An external pulldown resistor must be used
GPIO_26	Host Available	Available for general host use through host commands
GPIO_27	Host Available	Available for general host use through host commands
GPIO_28	Host Available	Available for general host use through host commands
GPIO_29	Host Available	Available for general host use through host commands
GPIO_30	Host Available	Available for general host use through host commands
GPIO_31	Host Available	Available for general host use through host commands

(1) TI recommends that all unused Host Available GPIO be configured as a logic '0' output and be left unconnected in the system. If this is not done, an external pulldown resistor (≤ 10 kΩ) must be used to avoid floating inputs.

表 7-8. GPIO Supported Functionality - Headlight Product Configuration

GPIO	SIGNAL NAME	DESCRIPTION [(1)]
GPIO_00	HL_PWM0 (output)	PWM 0 Output - This can be used for general purposes such as controlling the level of an external light source.
GPIO_01	PMIC_SEQ_STRT (output)	Sequence start output from the DLPC23x-Q1. This must be connected to the TPS99000-Q1 to time LED related actions and shadow TPS99000-Q1 configuration registers. An external pulldown resistor must be used.
GPIO_02	HL_PWM1(output)	PWM 1 Output - This can be used for general purposes such as controlling the level of an external light source.
GPIO_03	Reserved for Future Use	An external pulldown resistor must be used
GPIO_04	Reserved for Future Use	An external pulldown resistor must be used
GPIO_05	Reserved for Future Use	An external pulldown resistor must be used
GPIO_06	Host Available	Available for general host use through host commands
GPIO_07	Host Available	Available for general host use through host commands
GPIO_08	Host Available	Available for general host use through host commands
GPIO_09	Reserved for Future Use	An external pulldown resistor must be used
GPIO_10	Reserved for Future Use	An external pulldown resistor must be used
GPIO_11	Reserved for Future Use	An external pulldown resistor must be used
GPIO_12	Reserved for Future Use	An external pulldown resistor must be used
GPIO_13	Reserved for Future Use	An external pulldown resistor must be used
GPIO_14	Reserved for Future Use	An external pulldown resistor must be used
GPIO_15	PMIC_WD1 (output)	Periodic signal that the DLPC23x-Q1 processor generates during normal operation. TPS99000-Q1 monitors this signal and reports if this signal stops pulsing. An external pulldown resistor must be used.
GPIO_16	Reserved for Future Use	An external pulldown resistor must be used
GPIO_17	HL_PWM2 (output)	PWM 2 Output - This can be used for general purposes such as controlling the level of an external light source.
GPIO_18	EXT_SMPL	Connects to TPS99000-Q1 EXT_SMPL input. This sequence-aligned signal can be configured to trigger TPS99000-Q1 ADC sampling.
GPIO_19	Reserved for Future Use	An external pulldown resistor must be used
GPIO_20	Reserved for Future Use	An external pulldown resistor must be used
GPIO_21	Reserved for Future Use	An external pulldown resistor must be used
GPIO_22	Reserved for Future Use	An external pulldown resistor must be used
GPIO_23	Reserved for Future Use	An external pulldown resistor must be used
GPIO_24	Reserved for Future Use	An external pulldown resistor must be used
GPIO_25	Reserved for Future Use	An external pulldown resistor must be used
GPIO_26	Host Available	Available for general host use through host commands
GPIO_27	Host Available	Available for general host use through host commands
GPIO_28	Host Available	Available for general host use through host commands
GPIO_29	Host Available	Available for general host use through host commands
GPIO_30	Host Available	Available for general host use through host commands
GPIO_31	Host Available	Available for general host use through host commands

(1) TI recommends that all unused Host Available GPIO be configured as a logic '0' output and be left unconnected in the system. If this is not done, an external pulldown resistor (≤ 10 kΩ) must be used to avoid floating inputs.

7.3.8 Built-In Self Test (BIST)

The DLPC23x-Q1 provides a significant amount of BIST support to manage the operational integrity of the system. This BIST support is divided into two general BIST types, which are non-periodic and periodic.

Copyright © 2024 Texas Instruments Incorporated

Non-periodic BISTs are tests that are typically run one time, and are run outside of normal operation because their activity will disturb the operation of the system. These tests are specified to be run either by a Flash parameter or by a Host command. The Flash parameter specifies which tests are to be run during system power-up and initialization. The Host command is used to select and specify the running of these tests when the system is in Standby Mode (often just before the system is powered down). Some examples of non-periodic tests are: tests for all of the ASIC memories, tests for the main data processing path, and testing of the DMD memory.

Periodic BISTs are tests that are run on an almost continual basis during normal ASIC operation. These tests are managed (set up, enabled, results gathered and evaluated) automatically by the ASIC embedded software. Some examples of periodic tests are: tuning and verification of the DMD High-Speed Interface, input source monitoring (clock, active pixels, active lines), and external video checksum monitoring.

For more information on BISTs, refer to *DLPC230-Q1 / DLPC230S-Q1 Programmer's Guide for Display Applications* or *DLPC230-Q1 Programmer's Guide for Light Control Applications.*

7.3.9 EEPROMs

The DLPC23x-Q1 can optionally use an external I^{2}C EEPROM memory device for storage of calibration data as an alternative to storing calibration data in the SPI flash memory. The EEPROM must be connected to the designated DLPC23x-Q1 controller I^{2}C interface (MSTR_XXX).

The DLPC23x-Q1 supports the EEPROM devices listed in 表 7-9.

表 7-9. DLPC23x-Q1 Supported EEPROMs

MANUFACTURER	PART NUMBER	DENSITY (Kb)	PACKAGE SIZE
STMicro	M24C64A125	64	S08
STMicro	M24C128A125	128	S08
Atmel	A24C64D	64	S08
Atmel	A24C128C	128	S08

7.3.10 Temperature Sensor

The DLPC23x-Q1 requires an external temperature sensor (TMP411) to measure the DMD temperature through a remote temperature sense diode residing within the DMD. The DLPC23x-Q1 also reads the local temperature reported by the TMP411 device. The TMP411 must be connected to the designated DLPC23x-Q1 controller I^{2}C interface (MSTR_XXX).

The DLPC23x-Q1 uses an averaged DMD temperature reading to manage the thermal environment and/or operation of the DMD. This management occurs over the full range of temperatures supported by the DMD. This temperature reading is used change sequence operation across the temperature range, and park the DMD when it is operated outside of its allowable temperature specification.

7.3.11 Debug Support

The DLPC23x-Q1 contains a test point output port, TSTPT_(7:0), which provides the Host with the ability to specify a number of initial system configurations, as well as to provide for ASIC debug support. These test points are tristated while reset is applied, are sampled as inputs approximately 1.5µs after reset is released, and then switch to outputs after the input values have been sampled. The sampled and captured input state for each of these signals is used to configure initial system configurations as specified in the table Pin Functions—Parallel Port Input Data and Control in *セクション 4*.

There are three other signals (JTAGTDO(3:1)) that are sampled as inputs approximately 1.5µs after reset is released, and then switched to outputs. The sampled and captured state for each of these JTAGTDO signals is used to configure the initial test mode output state of the TSTPT_(7:0) signals. 表 7-10 defines the test mode selection for a few programmable output states for TSTPT_(7:0) as defined by JTAGTDO(3:1). For normal use (that is, no debug required), the default state of x111 (using weak internal pullups) must be used to allow for the normal use of these JTAG TDO signals.

To allow TI to make use of this debug capability, a jumper to an external pulldown is recommended for JTAGTDO(3:1).

表 7-10. Test Mode Selection Scenario Defined by JTAGTDO(3:1)

TSTPT_(7:0) OUTPUT [(1)]	JTAGTDO(3:1) CAPTURED VALUE	
	x111 (DEFAULT) (NO SWITCHING ACTIVITY)	x010 CLOCK DEBUG OUTPUT
TSTPT(0)	HI-Z	60MHz
TSTPT(1)	HI-Z	30MHz
TSTPT(2)	HI-Z	7.5MHz
TSTPT(3)	HI-Z	LOW
TSTPT(4)	HI-Z	15MHz
TSTPT(5)	HI-Z	60MHz
TSTPT(6)	HI-Z	LOW
TSTPT(7)	HI-Z	LOW

(1) These are only the default output selections. Software can reprogram the selection at any time.

7.4 Device Functional Modes

The DLPC23x-Q1 has three operational modes—Standby, Display, and Calibration—that are enabled through software commands through the host control interface.

7.4.1 Standby Mode

The system will automatically enter Standby mode after power is applied. This is a reduced functional mode that allows Flash update operations and Non-Periodic test operations. The DMD will be parked while the system is operating in this mode and no source can be displayed.

7.4.2 Display Mode

This is the main operational mode of the system. In this mode, normal display activities occur. In this mode the system can display video data and execute periodic BISTs. After system initialization, a host command can be used to transition to this mode from Standby mode. Alternatively, a flash configuration setting can be set to allow the system to automatically transition from standby to display mode after system initialization.

7.4.3 Calibration Mode

This mode is used to calibrate the system's light sources for the desired display properties. For head-up display applications, this includes the ability to adjust individual color light sources to achieve the desired brightness and color point.

Copyright © 2024 Texas Instruments Incorporated

8 Application and Implementation

注

以下のアプリケーション情報は、TI の製品仕様に含まれるものではなく、TI ではその正確性または完全性を保証いたしません。個々の目的に対する製品の適合性については、お客様の責任で判断していただくことになります。お客様は自身の設計実装を検証しテストすることで、システムの機能を確認する必要があります。

8.1 Application Information

The DLPC23x-Q1 is designed to support projection-based automotive applications such as head-up display (HUD) and high resolution headlight.

This DLP® Products chipset consists of three components—the Digital Micromirror Device (DMD), the DLPC23x-Q1, and the TPS99000-Q1. The DMD (DLP553x-Q1 or DLP4621-Q1) is a light modulator consisting of tiny mirrors that are used to form and project images. The DLPC23x-Q1 is a controller for the DMD; it formats incoming video sources and controls the timing of the DMD illumination sources and the DMD to display the incoming video source. The TPS99000-Q1 is a controller for the illumination sources (LEDs or lasers) and a management IC for the entire chipset. In conjunction, the DLPC23x-Q1 and the TPS99000-Q1 can also be used for system-level monitoring, diagnostics, and failure detection features.

8.2 Typical Application

8.2.1 Head-Up Display

The figure below shows the system block diagram for a DLP® technology HUD.

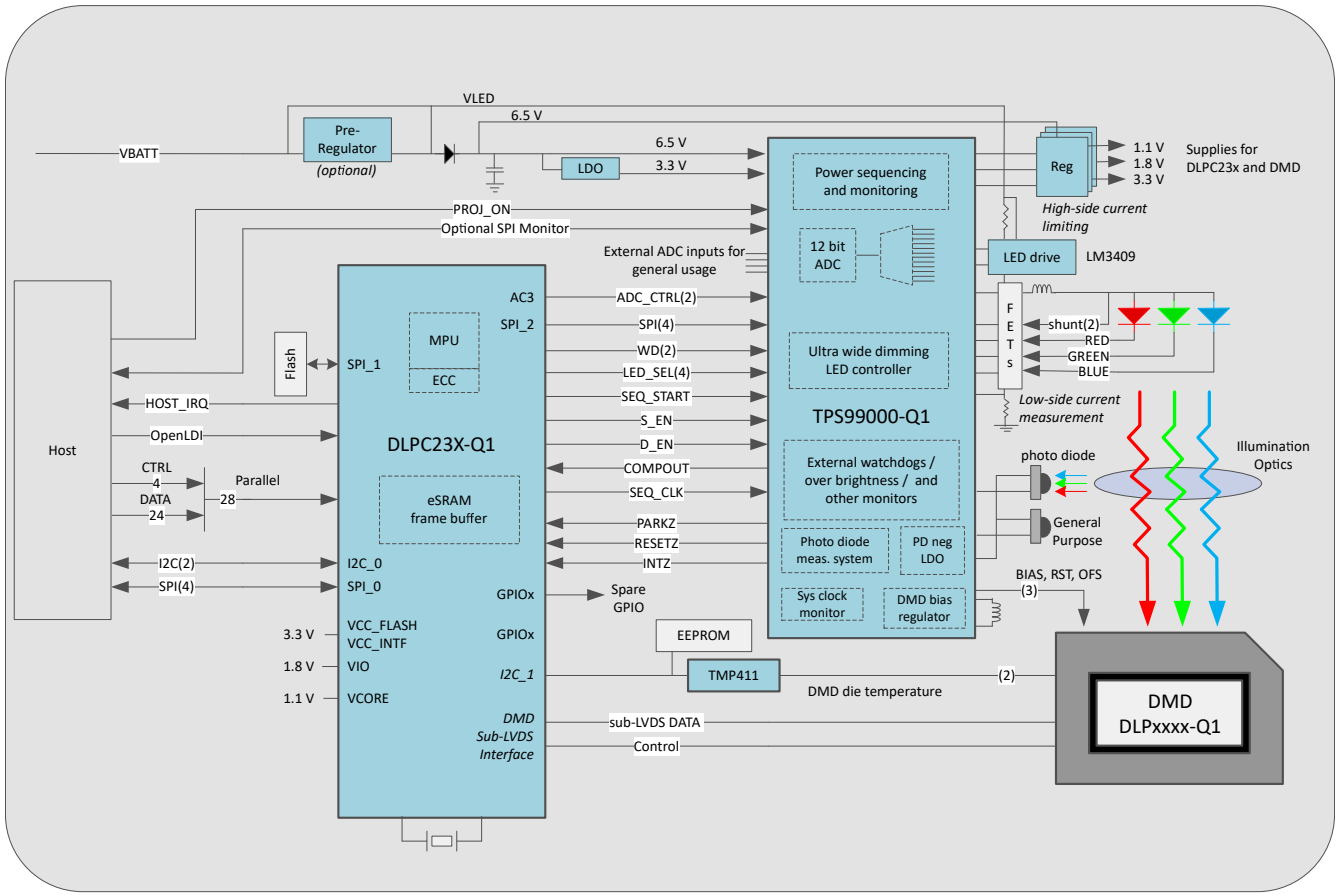

図 8-1. HUD System Block Diagram

8.2.1.1 Design Requirements

The DLPC23x-Q1 is a controller for the DMD and the timing of the RGB LEDs in the HUD. It requests the proper timing and amplitude from the LEDs to achieve the requested color and brightness from the HUD across the entire operating range. It synchronizes the DMD with these LEDs to display full-color video content sent by the host.

The DLPC23x-Q1 receives command and input video data from a host processor in the vehicle. Read and write (R/W) commands can be sent using either the I^2C bus or SPI bus. The bus that is not being used for R/W commands can be used as a read-only bus for diagnostic purposes. Input video can be sent over an OpenLDI bus or a parallel 24-bit bus. The SPI flash memory provides the embedded software for the DLPC23x-Q1's embedded processor, color calibration data, and default settings. The TPS99000-Q1 provides diagnostic and monitoring information to the DLPC23x-Q1 using an SPI bus and several other control signals such as PARKZ, INTZ, and RESETZ to manage power-up and power-down sequencing. The DLPC23x-Q1 interfaces to a TMP411 through I^2C for temperature information.

The outputs of the DLPC23x-Q1 are LED drive information to the TPS99000-Q1, control signals to the DMD, and monitoring and diagnostics information to the host processor. Based on a host requested brightness and the operating temperature, the DLPC23x-Q1 determines the proper timing and amplitudes for the LEDs. It passes this information to the TPS99000-Q1 using an SPI bus and several additional control signals such as D_EN, S_EN, and SEQ_STRT. It controls the DMD mirrors by sending data over a SubLVDS bus. It can alert the host about any critical errors using a HOST_IRQ signal.

The TPS99000-Q1 is a highly-integrated mixed-signal IC that controls DMD power, the analog response of the LEDs, and provides monitoring and diagnostics information for the HUD system. The power sequencing and monitoring blocks of the TPS99000-Q1 properly power up the DMD, provide accurate DMD voltage rails, as well as monitor the system's power rails during operation. The integration of these functions into one IC significantly reduces design time and complexity. The highly accurate photodiode (PD) measurement system and the dimming controller block precisely control the LED response. This enables a DLP technology HUD to achieve a very high dimming range (> 5000:1) with accurate brightness and color across the temperature range of the system. Finally, the TPS99000-Q1 has several general-purpose ADCs that developers can use for system-level monitoring, such as over-brightness detection.

The TPS99000-Q1 receives inputs from the DLPC23x-Q1, power rail voltages for monitoring, a photodiode that is used to measure LED response, the host processor, and potentially several other ADC ports. The DLPC23x-Q1 sends commands to the TPS99000-Q1 over an SPI port and several other control signals. The TPS99000-Q1 includes watchdogs to monitor the DLPC23x-Q1 and verify it is operating as expected. The power rails are monitored by the TPS99000-Q1 to detect power failures or glitches and request a proper power down of the DMD in case of an error. The photodiode's current is measured and amplified using a transimpedance amplifier (TIA) within the TPS99000-Q1. The host processor can read diagnostics information from the TPS99000-Q1 using a dedicated SPI bus, adding an independent monitoring path from the host processor. Additionally the host can request the system to be turned on or off using a PROJ_ON signal. The TPS99000-Q1 has several general-purpose ADCs that can be used to implement other system features such as over-brightness and over-temperature detection.

The outputs of the TPS99000-Q1 are LED drive signals, diagnostic information, and error alerts to the DLPC23x-Q1. The TPS99000-Q1 has signals connected to the LM3409 buck controller for high power LEDs and to discrete hardware that control the LEDs. The TPS99000-Q1 can output diagnostic information to the host and the DLPC23x-Q1 over two SPI buses. It also has signals such as RESETZ, PARKZ, and INTZ that can be used to trigger power down or reset sequences.

The DMD is a micro-electro-mechanical system (MEMS) device that receives electrical signals as an input (video data) and produces a mechanical output (mirror position). The electrical interface to the DMD is a SubLVDS interface driven with the DLPC23x-Q1. The mechanical output is the state of more than 1.3 million mirrors in the DMD array that can be tilted ±12°. In a projection system, the mirrors are used as pixels to display an image.

Copyright © 2024 Texas Instruments Incorporated

8.2.2 Headlight

図 8-2 shows the system block diagram for a DLP® headlight.

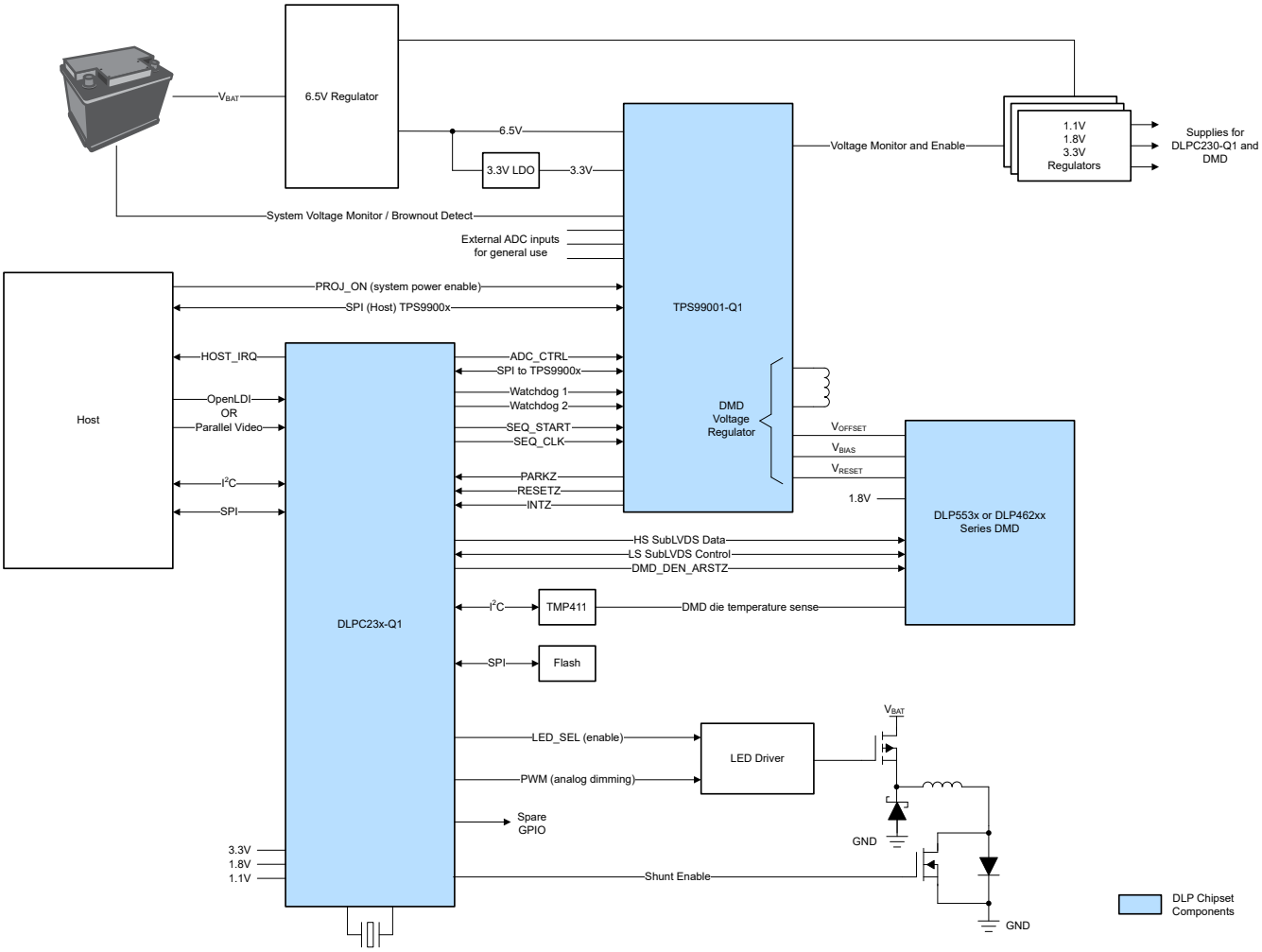

図 8-2. Headlight System Block Diagram

8.2.2.1 Design Requirements

The DLPC23x-Q1 is a controller for the DMD and the light sources in the DLP technology headlight. It receives input video from the host and synchronizes DMD and light source timing to achieve the desired video output. The DLPC23x-Q1 formats input video data that is displayed on the DMD. It synchronizes these video segments with light source timing to create video with grayscale shading.

The DLPC23x-Q1 receives command and input video data from a host processor in the vehicle. R/W commands can be sent using either the I^{2}C bus or the SPI bus. The bus that is not being used for R/W commands can be used as a read-only bus for diagnostic purposes. Input video can be sent over an OpenLDI bus or a parallel 24-bit bus. The 24-bit bus can be limited to only 8 bits of data for single light source systems such as headlights. The SPI flash memory provides the embedded software for the DLPC23x-Q1's embedded processor and default settings. The TPS99000-Q1 provides diagnostic and monitoring information to the DLPC23x-Q1 using an SPI bus and several other control signals such as PARKZ, INTZ, and RESETZ to manage power-up and power-down sequencing. The TMP411 uses an I^{2}C interface to provide the DMD array temperature to the DLPC23x-Q1.

The outputs of the DLPC23x-Q1 are configuration and monitoring commands to the TPS99000-Q1, timing controls to the LED or laser driver, control signals to the DMD, and monitoring and diagnostics information to the host processor. The DLPC23x-Q1 communicates with the TPS99000-Q1 over an SPI bus. It uses this to configure the TPS99000-Q1 and to read monitoring and diagnostics information from the TPS99000-Q1. The DLPC23x-Q1 sends drive-enable signals to the LED or laser driver, and synchronizes this with the DMD mirror timing. The control signals to the DMD are sent using a SubLVDS interface.

The TPS99000-Q1 is a highly integrated mixed-signal IC that controls DMD power, and the timing of the LEDs or lasers, and provides monitoring and diagnostics information for the DLP technology headlight system. The power sequencing and monitoring blocks of the TPS99000-Q1 properly power up the DMD and provide accurate DMD voltage rails, and then monitor the system's power rails during operation. The integration of these functions into one IC significantly reduces design time and complexity. The TPS99000-Q1 also has several output signals that can be used to control a variety of LED or laser driver topologies. The TPS99000-Q1 also has several general-purpose ADCs that designers can use for system-level monitoring.

The TPS99000-Q1 receives inputs from the DLPC23x-Q1, the power rails it monitors, the host processor, and potentially several other ADC ports. The DLPC23x-Q1 sends configuration and control commands to the TPS99000-Q1 over an SPI bus and several other control signals. The TPS99000-Q1 includes watchdogs to monitor the DLPC23x-Q1 and verify it is operating as expected. The power rails are monitored by the TPS99000-Q1 to detect power failures or glitches and request a proper power down of the DMD in case of an error. The host processor can read diagnostics information from the TPS99000-Q1 using a dedicated SPI bus. Additionally the host can request the image to be turned on or off using a PROJ_ON signal. Lastly, the TPS99000-Q1 has several general-purpose ADCs that can be used to implement system level monitoring functions.

The outputs of the TPS99000-Q1 are diagnostic information and error alerts to the DLPC23x-Q1, and control signals to the LED or laser driver. The TPS99000-Q1 can output diagnostic information to the host and the DLPC23x-Q1 over two SPI buses. In case of critical system errors, such as power loss, it outputs signals to the DLPC23x-Q1 that trigger power down or reset sequences. It also has output signals that can be used to implement various LED or laser driver topologies.

The DMD is a micro-electro-mechanical system (MEMS) device that receives electrical signals as an input (video data), and produces a mechanical output (mirror position). The electrical interface to the DMD is a SubLVDS interface with the DLPC23x-Q1. The mechanical output is the state of more than 1.3 million mirrors in the DMD array that can be tilted ±12°. In a projection system the mirrors are used as pixels to display an image.

8.2.2.2 Headlight Video Input

The DLPC23x-Q1 accepts 8-bit grayscale video data when used in headlight applications.

When using the parallel video port, PDATA_[16-23] are utilized (red input when using a typical RGB888 mapping). PDATA_[0-15] must be tied to ground.

When using the OpenLDI video ports, data bits R0 – R7 are utilized. B0-B7 and G0-G7 are unused.

8.3 Power Supply Recommendations

8.3.1 Power Supply Management

The TPS99000-Q1 manages power for the DLPC23x-Q1 and DMD. See *セクション 5.12* for all power sequencing and timing requirements.

8.3.2 Hot Plug Usage

The DLPC23x-Q1 does not support Hot Plug use (for itself or for any DMD connected to the system). As such, the system must always be powered down prior to removal of the ASIC or DMD from any system.

8.3.3 Power Supply Filtering

The following filtering circuits are recommended for the various supply inputs. High-frequency 0.1µF capacitors must be evenly distributed amongst the power balls and placed as close to the power balls as possible.

Copyright © 2024 Texas Instruments Incorporated

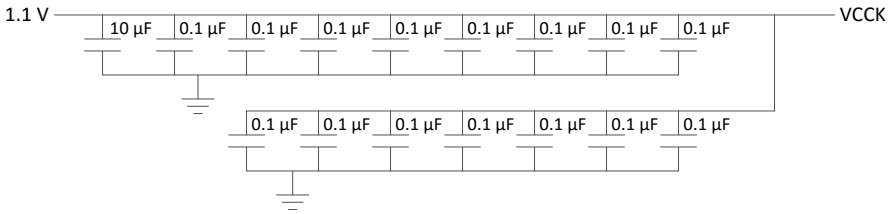

図 8-3. VCCK Recommended Filter

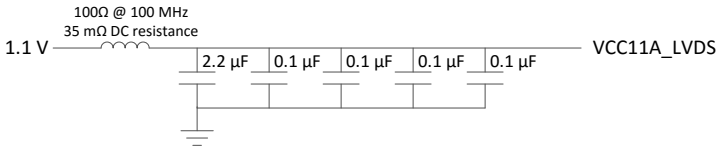

図 8-4. VCC11A_LVDS Recommended Filter

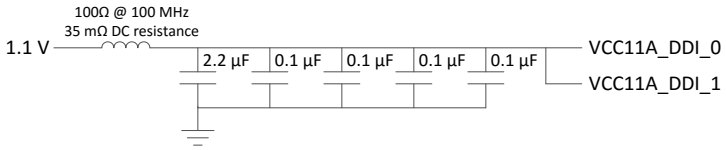

図 8-5. VCC11A_DDI Recommended Filter

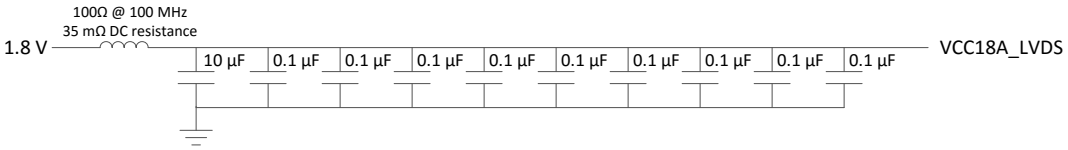

図 8-6. VCC18A_LVDS Recommended Filter

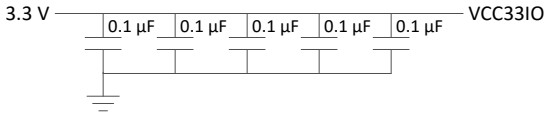

図 8-7. VCC33IO Recommended Filter

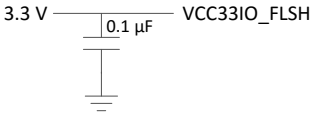

図 8-8. VCC33IO_FLSH Recommended Filter

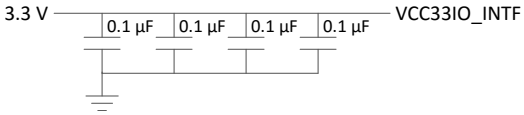

図 8-9. VCC33IO_INTF Recommended Filter

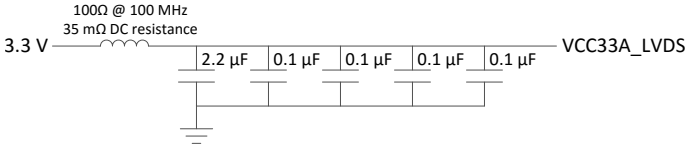

図 8-10. VCC33A_LVDS Recommended Filter

8.4 Layout

8.4.1 Layout Guidelines

8.4.1.1 PCB Layout Guidelines for Internal ASIC PLL Power

The following guidelines are recommended to achieve the desired ASIC performance relative to the internal PLL. The DLPC23x-Q1 contains two internal PLLs that have dedicated analog supplies (VCC11AD_PLLM, GND11AD_PLLM, VCC11AD_PLLD, GND11AD_PLLD). At a minimum, VCC11AD_PLLx power and GND11AD_PLLx ground pins must be isolated using a simple passive filter consisting of two series ferrites and two shunt capacitors (to widen the spectrum of noise absorption). Recommended values and layout are shown in 表 8-1 and 図 8-11 respectively.

表 8-1. Recommended PLL Filter Components

COMPONENT	PARAMETER	RECOMMENDED VALUE	UNIT
Shunt Capacitor	Capacitance	0.1	µF
Shunt Capacitor	Capacitance	1.0	µF
Series Ferrite	Impedance at 100 MHz	> 100	Ω
	DC Resistance	< 0.40	

Because the PCB layout is critical to PLL performance, it is vital that the quiet ground and power are treated like analog signals. Additional design guidelines are as follows:

- All four components must be placed as close to the ASIC as possible.
- It is especially important to keep the leads of the high-frequency capacitors as short as possible.
- A capacitor of each value must be connected across VCC11AD_PLLM / GND11AD_PLLM and VCC11AD_PLLD / GND11AD_PLLD respectively on the ASIC side of the ferrites.
- VCC11AD_PLLM and VCC11AD_PLLD must be a single trace from the DLPC23x-Q1 to both capacitors and then through the series of ferrites to the power source.
- The power and ground traces must be as short as possible, parallel to each other, and as close as possible to each other.

Copyright © 2024 Texas Instruments Incorporated

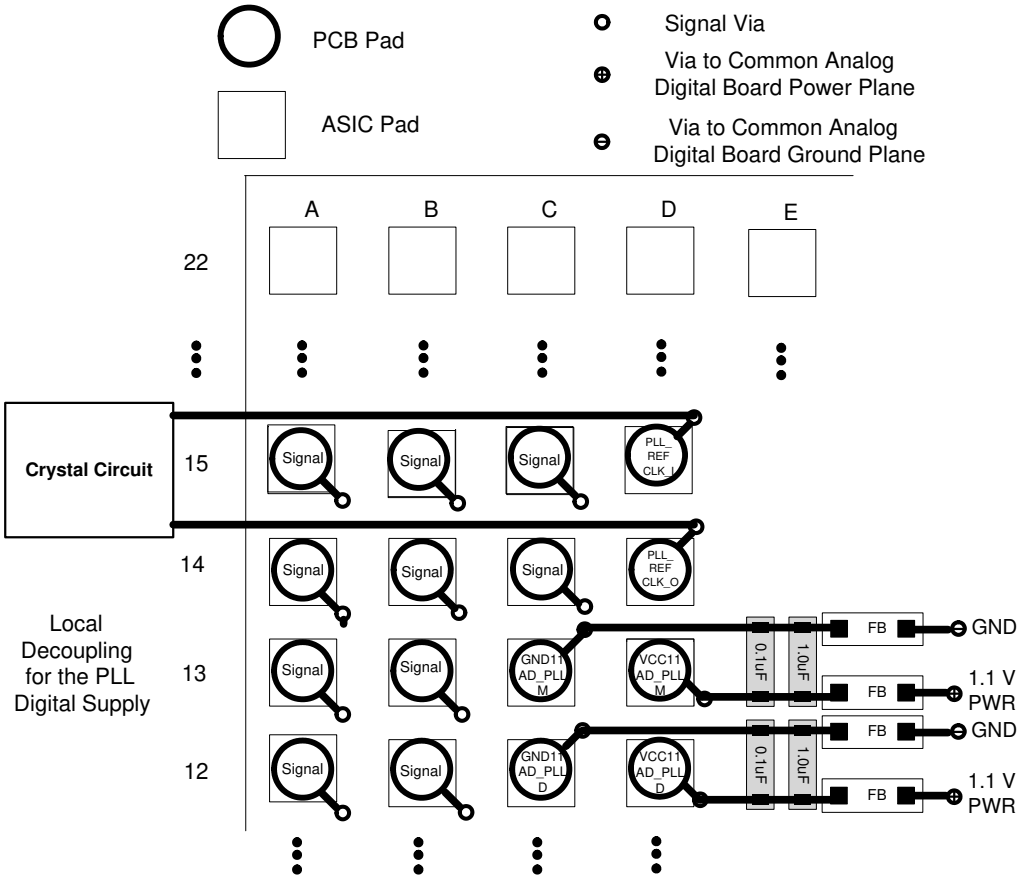

図 8-11. DLPC230-Q1 PLL Filter Layout

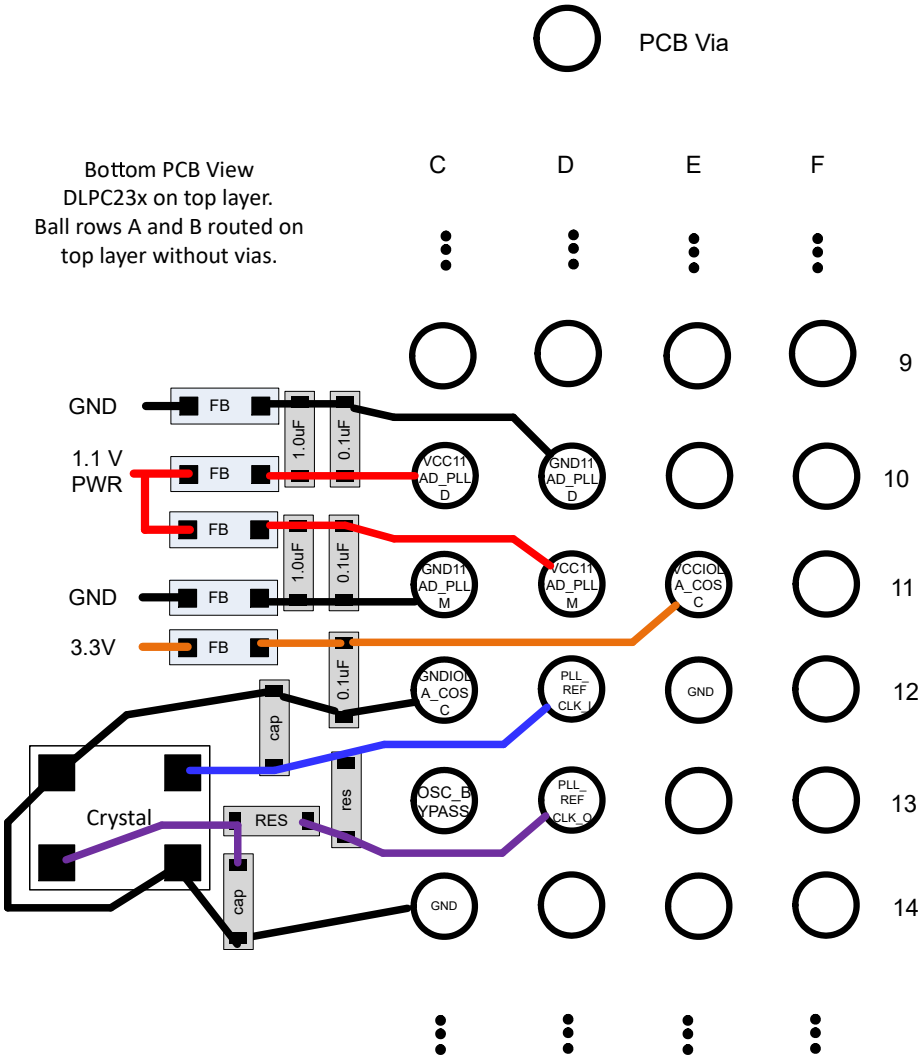

図 8-12. DLPC231-Q1 PLL Filter and Crystal Layout

Copyright © 2024 Texas Instruments Incorporated

8.4.1.2 DLPC23x-Q1 Reference Clock

The DLPC23x-Q1 requires an external reference clock to feed its internal PLL. A crystal or oscillator can supply this reference. The recommended crystal configurations and reference clock frequencies are listed in 表 8-2, with additional required discrete components shown in 図 8-13 and defined in 表 8-2.

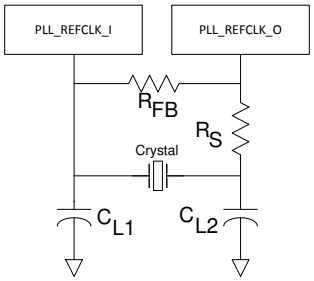

A. C_L = Crystal load capacitance
B. R_{FB} = Feedback Resistor

図 8-13. Discrete Components Required When Using Crystal

8.4.1.2.1 Recommended Crystal Oscillator Configuration

表 8-2. Recommended Crystal Configuration

PARAMETER	RECOMMENDED	UNIT
Crystal circuit configuration	Parallel resonant	
Crystal type	Fundamental (first harmonic)	
Crystal nominal frequency	16	MHz
Crystal frequency tolerance (including accuracy, temperature, aging and trim sensitivity)	±200	PPM
Maximum crystal equivalent series resistance (ESR)	50	Ω
Crystal load capacitance	10	pF
Temperature range	–40°C to +105°C	°C
Drive level (nominal)	100	µW
R_{FB} feedback resistor (nominal)	1	MΩ
C_{L1} external crystal load capacitor	See equation in (1)	pF
C_{L2} external crystal load capacitor	See equation in (2)	pF
PCB layout	A ground isolation ring around the crystal is recommended	

(1) CL1 = 2 × (CL – Cstray_pll_refclk_i), where: Cstray_pll_refclk_i = Sum of the package and PCB stray capacitance at the crystal pin associated with the ASIC pin pll_refclk_i.
(2) CL2 = 2 × (CL – Cstray_pll_refclk_o), where: Cstray_pll_refclk_o = Sum of the package and PCB stray capacitance at the crystal pin associated with the ASIC pin pll_refclk_o.

The crystal circuit in the DLPC23x-Q1 ASIC has dedicated power (VCC3IO_COSC) and ground (GNDIOLA_COSC) pins, with the recommended filtering shown in 図 8-14.

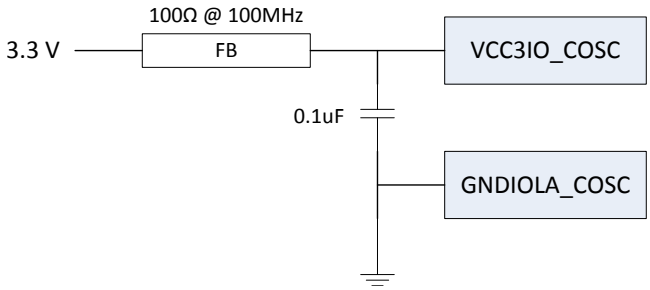

図 8-14. Crystal Power Supply Filtering

表 8-3. DLPC23x-Q1 Recommended Crystal Parts

MANUFACTURER	PART NUMBER	SPEED	FREQUENCY TOLERANCE, FREQUENCY STABILITY, AGING/YEAR	ESR	LOAD CAPACITANCE	OPERATING TEMPERATURE
TXC	AM16070006[(1)]	16MHz	Freq Tolerance: ±10ppm	50Ω max	10pF	–40°C to +125°C
			Freq Stability: ±50ppm			
			Aging/Year: ±3ppm			

(1) This device requires a 3kΩ series resister to limit power.

If an external oscillator is used, the oscillator output must drive the PLL_REFCLK_O pin on the DLPC23x-Q1 ASIC, the PLL_REFCLK_I pin must be left unconnected, and the OSC_BYPASS pin must = logic HIGH.

8.4.1.3 DMD Interface Layout Considerations

The DLPC23x-Q1 ASIC subLVDS HS/LS differential interface waveform quality and timing is dependent on the total length of the interconnect system, the spacing between traces, the characteristic impedance, etch losses, and how well matched the lengths are across the interface. Thus, ensuring a positive timing margin requires attention to many factors.

DLPC23x-Q1 I/O timing parameters as well as DMD I/O timing parameters can be found in their corresponding data sheets. Similarly, PCB routing mismatch can be budgeted and met through controlled PCB routing. PCB design recommendations are provided in 表 8-4 and 図 8-15 as a starting point for the customer.

表 8-4. PCB Recommendations for DMD Interface

PARAMETER [(1)] [(2)]		MIN	MAX	UNIT
T_W	Trace Width	4		mils
T_S	Intra-lane Trace Spacing	4		mils
T_{SPP}	Inter-lane Trace Spacing	$2 * (T_S + T_W)$		mils
R_{BGR}	Resistor - Bandgap Reference	42.2 (1%)		kΩ

(1) Recommendations to achieve the desired nominal differential impedance as specified by Tx_{load} in *セクション 5.7* and *セクション 5.8*.
(2) If using the minimum trace width and spacing to escape the ASIC ball field, widening these out after escape can be desirable if practical to achieve the target 100Ω impedance (for example, to reduce transmission line losses).

図 8-15. DMD Differential Layout Recommendations

Copyright © 2024 Texas Instruments Incorporated

8.4.1.4 General PCB Recommendations

TI recommends the following to achieve good thermal connectivity:

- A minimum of four power and ground planes
  - ZDQ package = 1oz copper power planes and 2oz copper ground planes
  - ZEK package = 1oz copper power planes and 1oz copper ground planes
- A copper plane beneath the thermal ball array containing a via farm with the following attributes
  - Copper plane area (top side of PCB, under package)
    - ZDQ package = 8.0mm × 8.0mm
    - ZEK package = 4.8mm × 4.8mm
  - Copper plane area (bottom side of PCB, opposite of package)
    - ZDQ package = 6.0mm × 6.0mm
    - ZEK package = 4.8mm × 4.8mm
  - Thermal via quantity
    - ZDQ package = 7 × 7 array of vias
    - ZEK package = 5 × 5 array of vias
  - Thermal via size
    - ZDQ package = 0.25mm (10 mils)
    - ZEK package = 0.203mm (8 mils)
  - Thermal via plating thickness
    - ZDQ package = 0.05mm (2 mils) wall thickness
    - ZEK package = 0.025mm (1 mils) wall thickness
- PCB copper coverage per layer
  - Power and ground layers: 90% minimum coverage
  - Top/bottom signal layers (ground fill to achieve coverage): 70% minimum coverage with 1.5oz copper

8.4.1.5 General Handling Guidelines for Unused CMOS-Type Pins

To avoid potentially damaging current caused by floating CMOS input-only pins, TI recommends that unused ASIC input pins be tied through a pullup resistor to its associated power supply or a pulldown to ground unless specifically noted otherwise in セクション 4. For ASIC inputs with internal pullup or pulldown resistors, it is unnecessary to add an external pullup or pulldown unless specifically recommended. Note that internal pullup and pulldown resistors are weak and must not be expected to drive the external line. When external pullup or pulldown resistors are needed for pins that have built-in weak pullups or pulldowns, use the value specified in 表 4-11.

Unused output-only pins must never be tied directly to power or ground, but can be left open.

When possible, TI recommends that unused bidirectional I/O pins be configured to their output state such that the pin can be left open. If this control is not available and the pins can become an input, then they must be pulled up (or pulled down) using an appropriate, dedicated resistor.

8.4.1.6 Maximum Pin-to-Pin, PCB Interconnects Etch Lengths

表 8-5. Max Pin-to-Pin PCB Interconnect Recommendations—DMD

ASIC INTERFACE	SIGNAL INTERCONNECT TOPOLOGY[(1) (2)]		UNIT
DMD	SINGLE BOARD SIGNAL ROUTING LENGTH	MULTI-BOARD SIGNAL ROUTING LENGTH	
DMD_HS0_CLK_P DMD_HS0_CLK_N	6.0 (152.4)	See [(3)]	in (mm)

表 8-5. Max Pin-to-Pin PCB Interconnect Recommendations—DMD (続き)

ASIC INTERFACE	SIGNAL INTERCONNECT TOPOLOGY[1] [2]		UNIT
DMD	SINGLE BOARD SIGNAL ROUTING LENGTH	MULTI-BOARD SIGNAL ROUTING LENGTH	
DMD_HS0_WDATA0_P DMD_HS0_WDATA0_N	6.0 (152.4)	See [3]	in (mm)
DMD_HS0_WDATA1_P DMD_HS0_WDATA1_N			
DMD_HS0_WDATA2_P DMD_HS0_WDATA2_N			
DMD_HS0_WDATA3_P DMD_HS0_WDATA3_N			
DMD_HS0_WDATA4_P DMD_HS0_WDATA4_N			
DMD_HS0_WDATA5_P DMD_HS0_WDATA5_N			
DMD_HS0_WDATA6_P DMD_HS0_WDATA6_N			
DMD_HS0_WDATA7_P DMD_HS0_WDATA7_N			
DMD_HS1_CLK_P DMD_HS1_CLK_N	6.0 (152.4)	See [3]	in (mm)
DMD_HS1_WDATA0_P DMD_HS1_WDATA0_N	6.0 (152.4)	See [3]	in (mm)
DMD_HS1_WDATA1_P DMD_HS1_WDATA1_N			
DMD_HS1_WDATA2_P DMD_HS1_WDATA2_N			
DMD_HS1_WDATA3_P DMD_HS1_WDATA3_N			
DMD_HS1_WDATA4_P DMD_HS1_WDATA4_N			
DMD_HS1_WDATA5_P DMD_HS1_WDATA5_N			
DMD_HS1_WDATA6_P DMD_HS1_WDATA6_N			
DMD_HS1_WDATA7_P DMD_HS1_WDATA7_N			
DMD_LS0_CLK_P DMD_LS0_CLK_N	6.5 (165.1)	See [3]	in (mm)
DMD_LS0_WDATA_P DMD_LS0_WDATA_N	6.5 (165.1)	See [3]	in (mm)
DMD_LS0_RDATA	6.5 (165.1)	See [3]	in (mm)
DMD_LS1_RDATA	6.5 (165.1)	See [3]	in (mm)
DMD_DEN_ARSTZ	N/A	N/A	in (mm)

(1) Max signal routing length includes escape routing.
(2) Multi-board DMD routing length is more restricted due to the impact of the connector.
(3) Due to board variations, these are impossible to define. Any board designs must SPICE simulate with the ASIC IBIS models to verify signal routing lengths do not exceed requirements.

Copyright © 2024 Texas Instruments Incorporated

表 8-6. Max Pin-to-Pin PCB Interconnect Recommendations - TPS99000-Q1

ASIC INTERFACE	SIGNAL INTERCONNECT TOPOLOGY (1) (2)		UNIT
TPS99000-Q1	SINGLE BOARD SIGNAL ROUTING LENGTH	MULTI-BOARD SIGNAL ROUTING LENGTH	
PMIC_LEDSEL(3)	6.0 (152.4)	See (3)	in (mm)
PMIC_LEDSEL(2)			
PMIC_LEDSEL(1)			
PMIC_LEDSEL(0)			
PMIC_ADC3_CLK			
PMIC_ADC3_MOSI			
PMIC_ADC3_MISO			
PMIC_SEQ_STRT			

(1) Max signal routing length includes escape routing.
(2) Multiboard DMD routing length is more restricted due to the impact of the connector.
(3) Due to board variations, these are impossible to define. Any board designs must SPICE simulate with the ASIC IBIS models to verify signal routing lengths do not exceed requirements.

表 8-7. High-Speed PCB Signal Routing Matching Requirements

SIGNAL GROUP LENGTH MATCHING (1) (2)					
INTERFACE	SIGNAL GROUP	REFERENCE SIGNAL	MAX MISMATCH ZDQ324	MAX MISMATCH ZEK324	UNIT
DMD(3)	DMD_HS0_WDATA0_P DMD_HS0_WDATA0_N	DMD_HS0_CLK_P DMD_HS0_CLK_N	±1.0 (±25.4)	±1.0 (±25.4)	in (mm)
	DMD_HS0_WDATA1_P DMD_HS0_WDATA1_N				
	DMD_HS0_WDATA2_P DMD_HS0_WDATA2_N				
	DMD_HS0_WDATA3_P DMD_HS0_WDATA3_N				
	DMD_HS0_WDATA4_P DMD_HS0_WDATA4_N				
	DMD_HS0_WDATA5_P DMD_HS0_WDATA5_N				
	DMD_HS0_WDATA6_P DMD_HS0_WDATA6_N				
	DMD_HS0_WDATA7_P DMD_HS0_WDATA7_N				
DMD(4)	DMD_HS0_x_P	DMD_HS0_x_N	±0.025 (±0.635)	0.0315±0.025 (0.8±0.635)	in (mm)

表 8-7. High-Speed PCB Signal Routing Matching Requirements (続き)

SIGNAL GROUP LENGTH MATCHING [1] [2]					
INTERFACE	SIGNAL GROUP	REFERENCE SIGNAL	MAX MISMATCH ZDQ324	MAX MISMATCH ZEK324	UNIT
DMD[3]	DMD_HS1_WDATA0_P DMD_HS1_WDATA0_N	DMD_HS1_CLK_P DMD_HS1_CLK_N	±1.0 (±25.4)	±1.0 (±25.4)	in (mm)
	DMD_HS1_WDATA1_P DMD_HS1_WDATA1_N				
	DMD_HS1_WDATA2_P DMD_HS1_WDATA2_N				
	DMD_HS1_WDATA3_P DMD_HS1_WDATA3_N				
	DMD_HS1_WDATA4_P DMD_HS1_WDATA4_N				
	DMD_HS1_WDATA5_P DMD_HS1_WDATA5_N				
	DMD_HS1_WDATA6_P DMD_HS1_WDATA6_N				
	DMD_HS1_WDATA7_P DMD_HS1_WDATA7_N				
DMD[4]	DMD_HS1_x_P	DMD_HS1_x_N	±0.025 (±0.635)	0.0315±0.025 (0.8±0.635) [5]	in (mm)
DMD[3]	DMD_LS0_WDATA_P DMD_LS0_WDATA_N	DMD_LS0_CLK_P DMD_LS0_CLK_N	±1.0 (±25.4)	±1.0 (±25.4)	in (mm)
DMD	DMD_LS0_WDATA DMD_LS0_RDATA DMD_LS1_RDATA	DMD_LS0_CLK	±0.2 (±5.08)	±0.2 (±5.08)	in (mm)
DMD[4]	DMD_LS0_x_P	DMD_LS0_x_N	±0.025 (±0.635)	0.0315±0.025 (0.8±0.635) [5]	in (mm)
DMD	DMD_DEN_ARSTZ	N/A	N/A	N/A	in (mm)

Copyright © 2024 Texas Instruments Incorporated

表 8-7. High-Speed PCB Signal Routing Matching Requirements (続き)

SIGNAL GROUP LENGTH MATCHING (1) (2)					
INTERFACE	SIGNAL GROUP	REFERENCE SIGNAL	MAX MISMATCH ZDQ324	MAX MISMATCH ZEK324	UNIT
TPS99000-Q1	PMIC_LEDSEL(3)	PMIC_ADC3_CLK	±1.0 (±25.4)	±1.0 (±25.4)	in (mm)
	PMIC_LEDSEL(2)				
	PMIC_LEDSEL(1)				
	PMIC_LEDSEL(0)				
	PMIC_SEQ_STRT				
	PMIC_ADC3_MOSI				
OpenLDI	Lx_DATAx_N	Lx_DATAx_P	N/A	0.0315±0.025 (0.8±0.635) (6)	in (mm)
OpenLDI	Lx_CLK_N	Lx_CLK_P	N/A	0.0315±0.025 (0.8±0.635) (6)	in (mm)

(1) These routing requirements are specific to the PCB routing. Internal package routing mismatches in the DLPC23x-Q1 and DMD have already been accounted for in these requirements.
(2) Training is applied to DMD HS data lines, so defined matching requirements are slightly relaxed.
(3) This is an inter-pair specification (that is, differential pair to differential pair within the group).
(4) This is an intra-pair specification (that is, length mismatch between P and N for the same pair).
(5) ZEK324 package trace length of the DMD interface differential N signals are 0.8mm longer than the P signals to simplify matching of the PCB signals.
(6) ZEK324 package trace length of the OpenLDI interface differential P signals are 0.8mm longer than the N signals to simplify matching of the PCB signals.

8.4.1.7 Number of Layer Changes

- Single-ended signals: Minimize the number of layer changes.
- Differential signals: Individual differential pairs can be routed on different layers, but the signals of a given pair must not change layers.

8.4.1.8 Stubs

- Stubs must be avoided.

8.4.1.9 Terminations

- No external termination resistors are required on the DMD_HS or DMD_LS differential signals.
- The DMD_LS0_RDATA and DMD_LS1_RDATA single-ended signal paths must include a 10-Ω series termination resistor located as close as possible to the corresponding DMD pin.
- DMD_DEN_ARSTZ does not typically require a series resistor, however, for a long trace, one can be needed to reduce undershoot/overshoot.

8.4.1.10 Routing Vias

- The number of vias on each DMD_HS and DMD_LS signal must be minimized and must not exceed two. If two are required, one must be placed at each end of the line (one at the ASIC and one at the DMD).

8.4.1.11 Layout Examples

Below is an examle layout for the DLPC231-Q1. Complete EVM reference designs are available on TI.com.

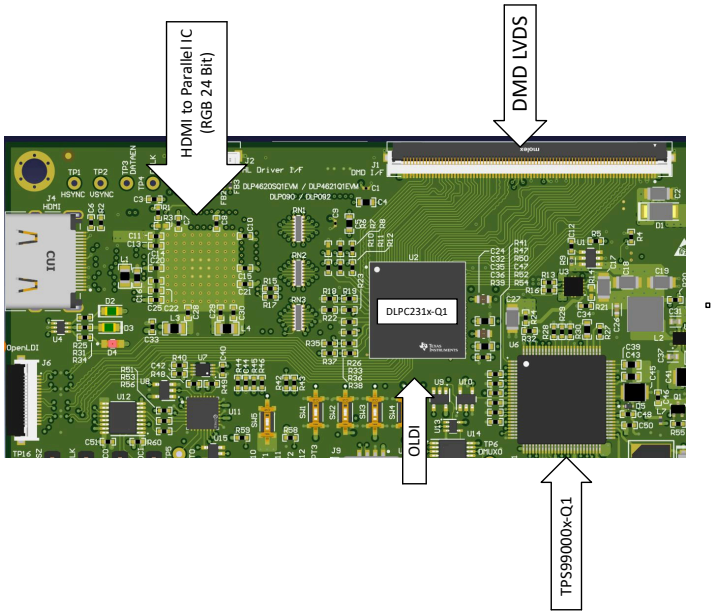

図 8-16. Top level Layout Example—OLDI and DMD LVDS

8.4.2 Thermal Considerations

The underlying thermal limitation of the DLPC23x-Q1 is that the maximum operating junction temperature (T_J) not be exceeded (this is defined in セクション 5.3). This temperature is dependent on operating ambient temperature, airflow, PCB design (including the component layout density and the amount of copper used), power dissipation of the DLPC23x-Q1, and power dissipation of surrounding components. The DLPC23x-Q1's package is designed primarily to extract heat through the power and ground planes of the PCB. Thus, copper content and airflow over the PCB are important factors.

TI highly recommends that after the host PCB is designed and built that the thermal performance be measured and validated.

To do this, measure the top center case temperature under the worse case product scenario (max power dissipation, max voltage, max ambient temperature) and validate that the maximum recommended case temperature (T_C) is not exceeded. This specification is based on the measured φ_{JT} for the DLPC23x-Q1 package and provides a relatively accurate correlation to junction temperature. Take care when measuring this case temperature to prevent accidental cooling of the package surface. TI recommends a small (approximately 40 gauge) thermocouple. The bead and thermocouple wire must contact the top of the package and be covered with a minimal amount of thermally conductive epoxy. The wires must be routed closely along the package and the board surface to avoid cooling the bead through the wires.

Copyright © 2024 Texas Instruments Incorporated

9 Device and Documentation Support

9.1 Device Support

9.1.1 サード・パーティ製品に関する免責事項

サード・パーティ製品またはサービスに関するテキサス・インスツルメンツの出版物は、単独またはテキサス・インスツルメンツの製品、サービスと一緒に提供される場合に関係なく、サード・パーティ製品またはサービスの適合性に関する是認、サード・パーティ製品またはサービスの是認の表明を意味するものではありません。

9.1.2 Device Nomenclature

9.1.2.1 Device Markings DLPC230-Q1 or DLPC230S-Q1

Marking Definitions:

Line 1:	TI Part Number: Production	DLPC230 = Device ID blank or A, B, C ... = Part Revision Blank or S = Functional Safety T = Temperature –40°C to +105°C ambient operating temperature ZDQ = Package designator R = Tape & Reel, blank = tray Q1 = Automotive qualified
Line 2:	Vendor Lot and Fab Information	XXXXX = Fab lot number -XX = Fab Sublot X (last X) = Assembly Sublot The Fab is UMC12A. As such, the first character of the lot number is K
Line 3:	Vendor Year and Week code	YY = Year WW = Week Example, 1614 - parts built the 14th week of 2016

9.1.2.2 Device Markings DLPC231-Q1 or DLPC231S-Q1

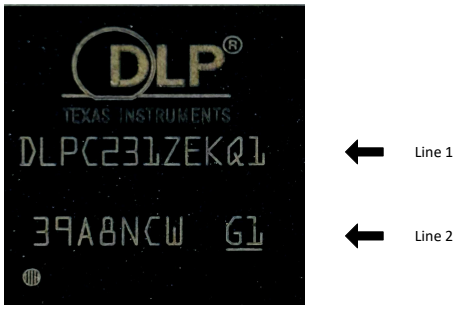

Marking Definitions:

Line 1:	TI Part Number: Production	DLPC231 = Device ID blank or A, B, C ... = Part Revision Blank or S = Functional Safety Blank or T = Temperature –40°C to +105°C ambient operating temperature ZEK = Package designator R = Tape & Reel, blank = tray Q1 = Automotive qualified
Line 2:	Vendor Lot and Fab Information	First 7 Characters = Lot Trace Code Last 2 Characters = Environmental Category

9.1.2.3 Video Timing Parameter Definitions

Active Lines Per Frame (ALPF)	Defines the number of lines in a frame containing displayable data: ALPF is a subset of the TLPF.
Active Pixels Per Line (APPL)	Defines the number of pixel clocks in a line containing displayable data: APPL is a subset of the TPPL.
Horizontal Back Porch (HBP) Blanking	Number of blank pixel clocks after horizontal sync but before the first active pixel. Note: HBP times are reference to the leading (active) edge of the respective sync signal.
Horizontal Front Porch (HFP) Blanking	Number of blank pixel clocks after the last active pixel but before Horizontal Sync.
Horizontal Sync (HS)	Timing reference point that defines the start of each horizontal interval (line). The absolute reference point is defined by the active edge of the HS signal. The active edge (either rising or falling edge as defined by the source) is the reference from which all horizontal blanking parameters are measured.
Total Lines Per Frame (TLPF)	Defines the vertical period (or frame time) in lines: TLPF = Total number of lines per frame (active and inactive).
Total Pixel Per Line (TPPL)	Defines the horizontal line period in pixel clocks: TPPL = Total number of pixel clocks per line (active and inactive).
Vertical Sync (VS)	Timing reference point that defines the start of the vertical interval (frame). The absolute reference point is defined by the active edge of the VS signal. The active edge (either rising or falling edge as defined by the source) is the reference from which all vertical blanking parameters are measured.
Vertical Back Porch (VBP) Blanking	Number of blank lines after vertical sync but before the first active line.
Vertical Front Porch (VFP) Blanking	Number of blank lines after the last active line but before vertical sync.

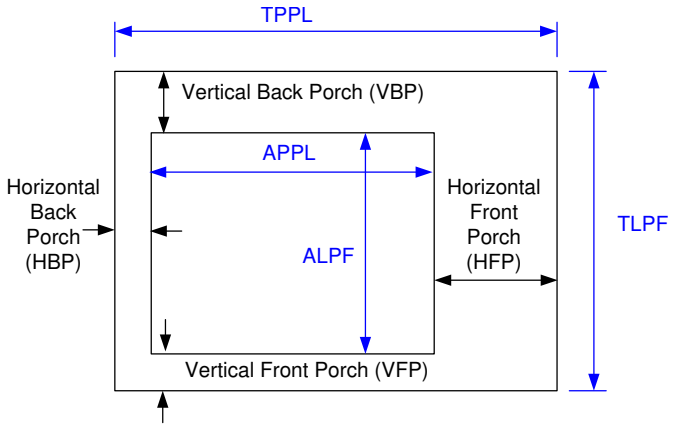

Copyright © 2024 Texas Instruments Incorporated

9.2 Trademarks

DLP® is a registered trademark of Texas Instruments.
すべての商標は、それぞれの所有者に帰属します。

9.3 静電気放電に関する注意事項

この IC は、ESD によって破損する可能性があります。テキサス・インスツルメンツは、IC を取り扱う際には常に適切な注意を払うことを推奨します。正しい取り扱いおよび設置手順に従わない場合、デバイスを破損するおそれがあります。

ESD による破損は、わずかな性能低下からデバイスの完全な故障まで多岐にわたります。精密な IC の場合、パラメータがわずかに変化するだけで公表されている仕様から外れる可能性があるため、破損が発生しやすくなっています。

9.4 用語集

テキサス・インスツルメンツ用語集　　この用語集には、用語や略語の一覧および定義が記載されています。

10 Revision History

資料番号末尾の英字は改訂を表しています。その改訂履歴は英語版に準じています。

Changes from Revision H (March 2024) to Revision I (August 2024) — **Page**

- Setup and Hold Time constraints for CSZ (t_{csz_su} and t_{csz_h}) have been added into Host/Diagnostic Port SPI Interface Timing Requirements and can be explicitly seen in 図 5-6 26
- Changed *rising edge* to *falling edge* under the t_{p_su} and t_{p_h} description for TPS99000-Q1 AD3 Interface Timing Requirements so each signal is correctly represented from 図 5-11 31

Changes from Revision G (September 2023) to Revision H (March 2024) — **Page**

- Updated section for inclusive terminology; Added note to 表 4-10 3
- Changed *ESD Ratings* table to the automotive format; added *ESD Ratings* spec for ZEK package 15
- Removed "Advanced Information" comment; Updated footnote 2 example 16
- Updated Max current values for VCC1.1 and VCC1.8 total and each supply input 17
- Updated Package - Maximum Power 21
- Updated セクション 5.20 for inclusive terminology 31
- Updated セクション 5.21 section for inclusive terminology 33
- Updated セクション 7.3.9 for inclusive terminology 49
- Updated セクション 7.3.10 for inclusive terminology 49
- Added Layout examples 66
- Added DLPC231 Device Markings 67
- Updated ZDQ0324A package outline to show alternate mold dimension; Added ZEK0324A package outline drawing to support DLPC231-Q1 and DLPC231S-Q1 70

Changes from Revision F (June 2018) to Revision G (September 2023) — **Page**

- Changed the DMD Pins assignment: DMD_HS1_WDATA4_P—DMD_HS1_WDATA7_N; Updated section for inclusive terminology 3

11 Mechanical, Packaging, and Orderable Information

The following pages include mechanical, packaging, and orderable information. This information is the most current data available for the designated devices. This data is subject to change without notice and revision of this document. For browser-based versions of this data sheet, refer to the left-hand navigation.

Copyright © 2024 Texas Instruments Incorporated

重要なお知らせと免責事項

テキサス・インスツルメンツは、技術データと信頼性データ (データシートを含みます)、設計リソース (リファレンス デザインを含みます)、アプリケーションや設計に関する各種アドバイス、Web ツール、安全性情報、その他のリソースを、欠陥が存在する可能性のある「現状のまま」提供しており、商品性および特定目的に対する適合性の黙示保証、第三者の知的財産権の非侵害保証を含むいかなる保証も、明示的または黙示的にかかわらず拒否します。

これらのリソースは、テキサス・インスツルメンツ製品を使用する設計の経験を積んだ開発者への提供を意図したものです。(1) お客様のアプリケーションに適した テキサス・インスツルメンツ製品の選定、(2) お客様のアプリケーションの設計、検証、試験、(3) お客様のアプリケーションに該当する各種規格や、その他のあらゆる安全性、セキュリティ、規制、または他の要件への確実な適合に関する責任を、お客様のみが単独で負うものとします。

上記の各種リソースは、予告なく変更される可能性があります。これらのリソースは、リソースで説明されている テキサス・インスツルメンツ製品を使用するアプリケーションの開発の目的でのみ、テキサス・インスツルメンツはその使用をお客様に許諾します。これらのリソースに関して、他の目的で複製することや掲載することは禁止されています。テキサス・インスツルメンツや第三者の知的財産権のライセンスが付与されている訳ではありません。お客様は、これらのリソースを自身で使用した結果発生するあらゆる申し立て、損害、費用、損失、責任について、テキサス・インスツルメンツおよびその代理人を完全に補償するものとし、テキサス・インスツルメンツは一切の責任を拒否します。

テキサス・インスツルメンツの製品は、テキサス・インスツルメンツの販売条件、または ti.com やかかる テキサス・インスツルメンツ製品の関連資料などのいずれかを通じて提供する適用可能な条項の下で提供されています。テキサス・インスツルメンツがこれらのリソースを提供することは、適用される テキサス・インスツルメンツの保証または他の保証の放棄の拡大や変更を意味するものではありません。

お客様がいかなる追加条項または代替条項を提案した場合でも、テキサス・インスツルメンツはそれらに異議を唱え、拒否します。

郵送先住所：Texas Instruments, Post Office Box 655303, Dallas, Texas 75265
Copyright © 2024, Texas Instruments Incorporated

PACKAGING INFORMATION

Orderable part number	Status (1)	Material type (2)	Package | Pins	Package qty | Carrier	RoHS (3)	Lead finish/ Ball material (4)	MSL rating/ Peak reflow (5)	Op temp (°C)	Part marking (6)
DLPC230TZDQQ1	Active	Production	BGA (ZDQ) | 324	60 | JEDEC TRAY (5+1)	Yes	Call TI	Call TI	-40 to 105	
DLPC230TZDQRQ1	Active	Production	BGA (ZDQ) | 324	250 | SMALL T&R	Yes	Call TI	Call TI	-40 to 105	
DLPC231ZEKQ1	Active	Production	NFBGA (ZEK) | 324	126 | JEDEC TRAY (5+1)	Yes	SNAGCU	Level-3-260C-168 HR	-40 to 105	DLPC231ZEKQ1
DLPC231ZEKRQ1	Active	Production	NFBGA (ZEK) | 324	1000 | LARGE T&R	Yes	SNAGCU	Level-3-260C-168 HR	-40 to 105	DLPC231ZEKQ1

(1) **Status:** For more details on status, see our product life cycle.

(2) **Material type:** When designated, preproduction parts are prototypes/experimental devices, and are not yet approved or released for full production. Testing and final process, including without limitation quality assurance, reliability performance testing, and/or process qualification, may not yet be complete, and this item is subject to further changes or possible discontinuation. If available for ordering, purchases will be subject to an additional waiver at checkout, and are intended for early internal evaluation purposes only. These items are sold without warranties of any kind.

(3) **RoHS values:** Yes, No, RoHS Exempt. See the TI RoHS Statement for additional information and value definition.

(4) **Lead finish/Ball material:** Parts may have multiple material finish options. Finish options are separated by a vertical ruled line. Lead finish/Ball material values may wrap to two lines if the finish value exceeds the maximum column width.

(5) **MSL rating/Peak reflow:** The moisture sensitivity level ratings and peak solder (reflow) temperatures. In the event that a part has multiple moisture sensitivity ratings, only the lowest level per JEDEC standards is shown. Refer to the shipping label for the actual reflow temperature that will be used to mount the part to the printed circuit board.

(6) **Part marking:** There may be an additional marking, which relates to the logo, the lot trace code information, or the environmental category of the part.

Multiple part markings will be inside parentheses. Only one part marking contained in parentheses and separated by a "~" will appear on a part. If a line is indented then it is a continuation of the previous line and the two combined represent the entire part marking for that device.

Important Information and Disclaimer: The information provided on this page represents TI's knowledge and belief as of the date that it is provided. TI bases its knowledge and belief on information provided by third parties, and makes no representation or warranty as to the accuracy of such information. Efforts are underway to better integrate information from third parties. TI has taken and continues to take reasonable steps to provide representative and accurate information but may not have conducted destructive testing or chemical analysis on incoming materials and chemicals. TI and TI suppliers consider certain information to be proprietary, and thus CAS numbers and other limited information may not be available for release.

In no event shall TI's liability arising out of such information exceed the total purchase price of the TI part(s) at issue in this document sold by TI to Customer on an annual basis.

TRAY

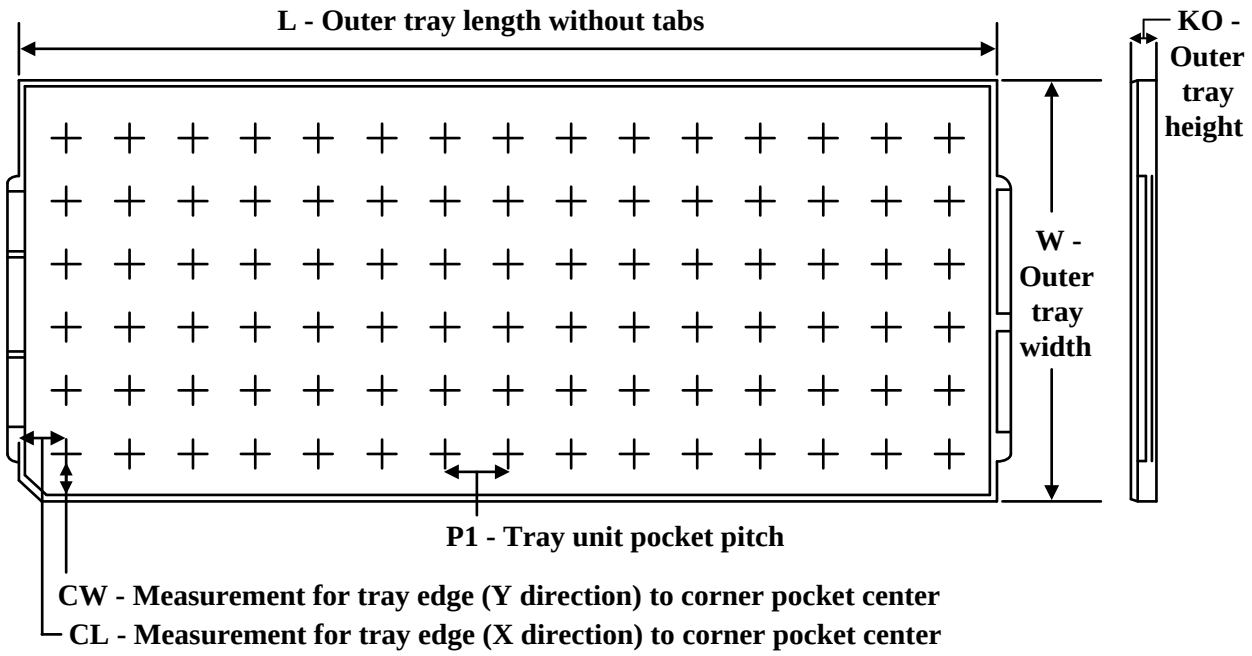

Chamfer on Tray corner indicates Pin 1 orientation of packed units.

*All dimensions are nominal

Device	Package Name	Package Type	Pins	SPQ	Unit array matrix	Max temperature (°C)	L (mm)	W (mm)	K0 (µm)	P1 (mm)	CL (mm)	CW (mm)
DLPC231ZEKQ1	ZEK	NFBGA	324	126	7 X 18	150	315	135.9	7620	17.2	11.3	16.35

PACKAGE OUTLINE

ZDQ0324A

BGA - 2.352 mm max height

BALL GRID ARRAY

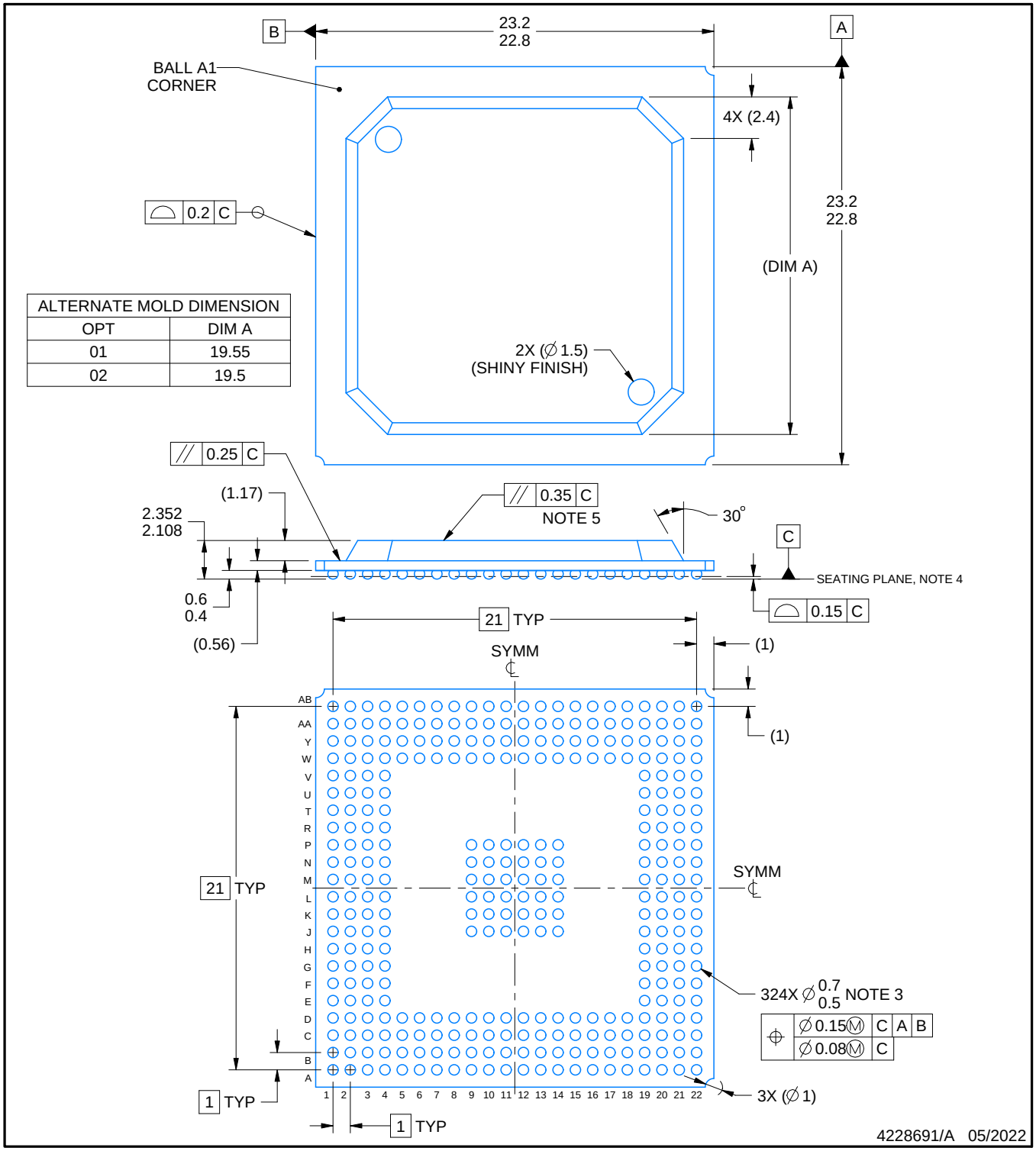

ALTERNATE MOLD DIMENSION	
OPT	DIM A
01	19.55
02	19.5

NOTES:
1. All linear dimensions are in millimeters. Any dimensions in parenthesis are for reference only. Dimensioning and tolerancing per ASME Y14.5M.
2. This drawing is subject to change without notice.
3. Dimension is measured at the maximum solder ball diameter parallel to datum plane C.
4. Datum C (Seating Plane) is defined by the spherical crowns of the solder balls.
5. Parallesim measurement shall exclude any effect of mark on the top surface of package.

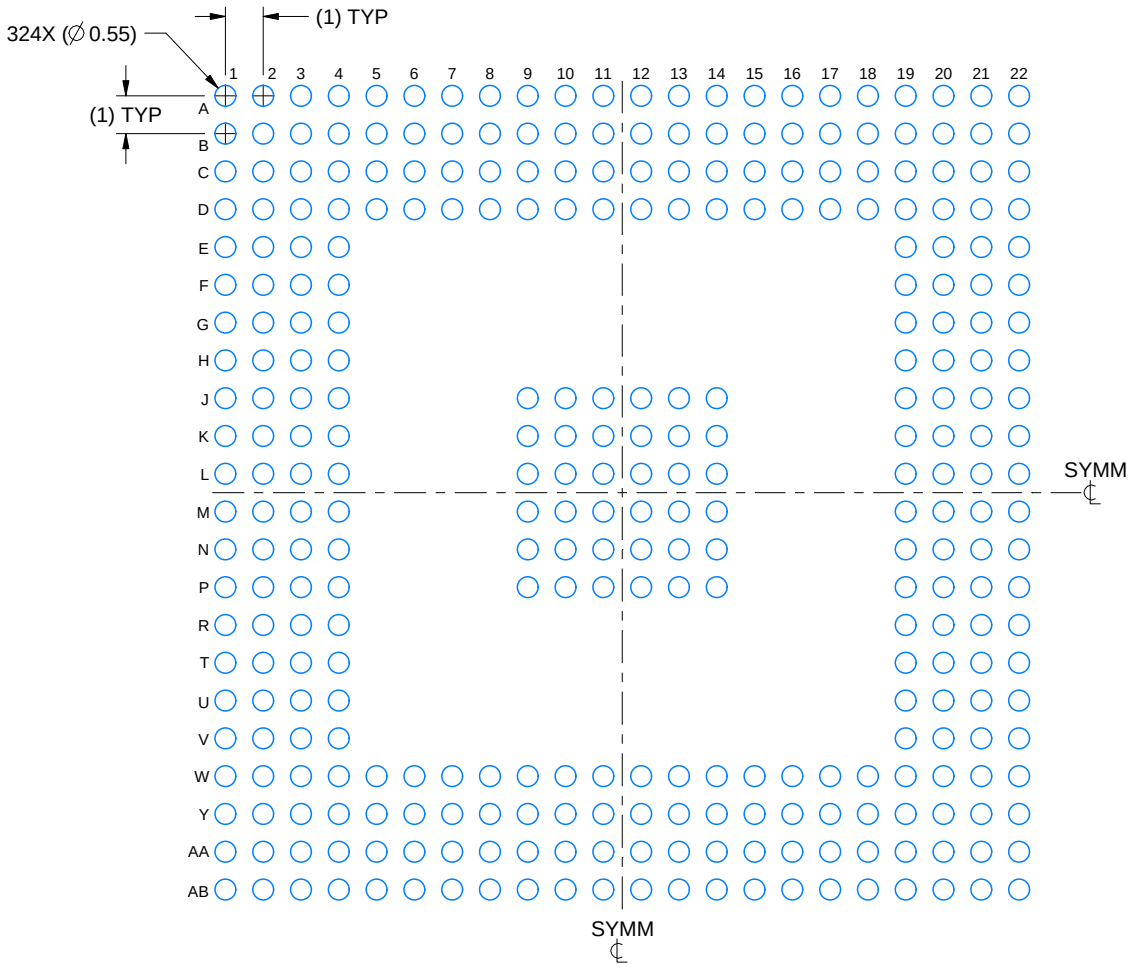

LAND PATTERN EXAMPLE
EXPOSED METAL SHOWN
SCALE: 5X

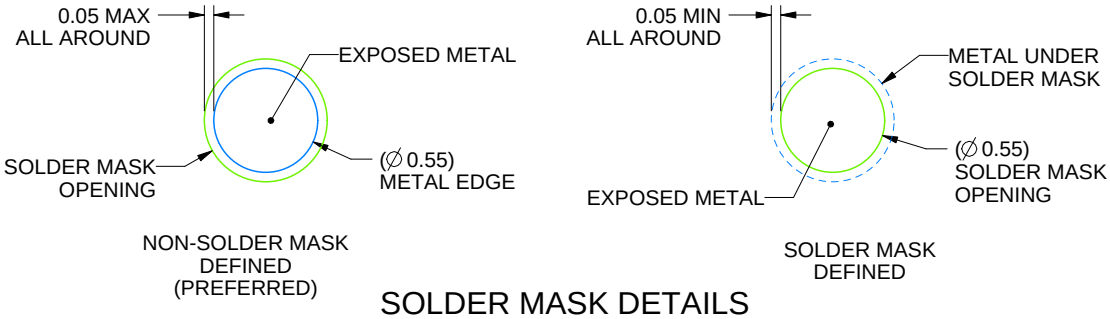

SOLDER MASK DETAILS
NOT TO SCALE

4228691/A 05/2022

NOTES: (continued)

6. Final dimensions may vary due to manufacturing tolerance considerations and also routing constraints.
   For information, see Texas Instruments literature number SPRAA99 (www.ti.com/lit/spraa99).

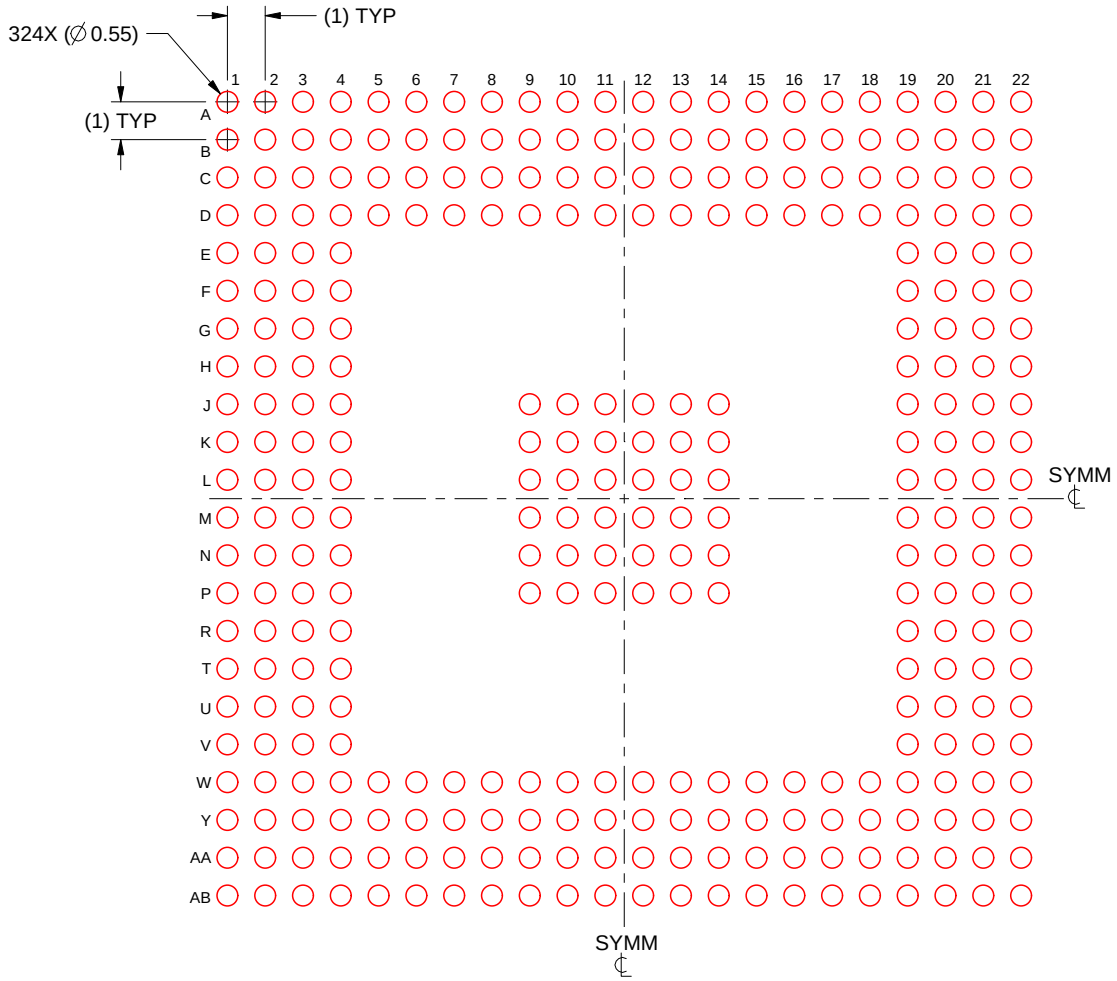

SOLDER PASTE EXAMPLE
BASED ON 0.125 mm THICK STENCIL
SCALE: 5X

4228691/A 05/2022

NOTES: (continued)

7. Laser cutting apertures with trapezoidal walls and rounded corners may offer better paste release.

PLASTIC BALL GRID ARRAY

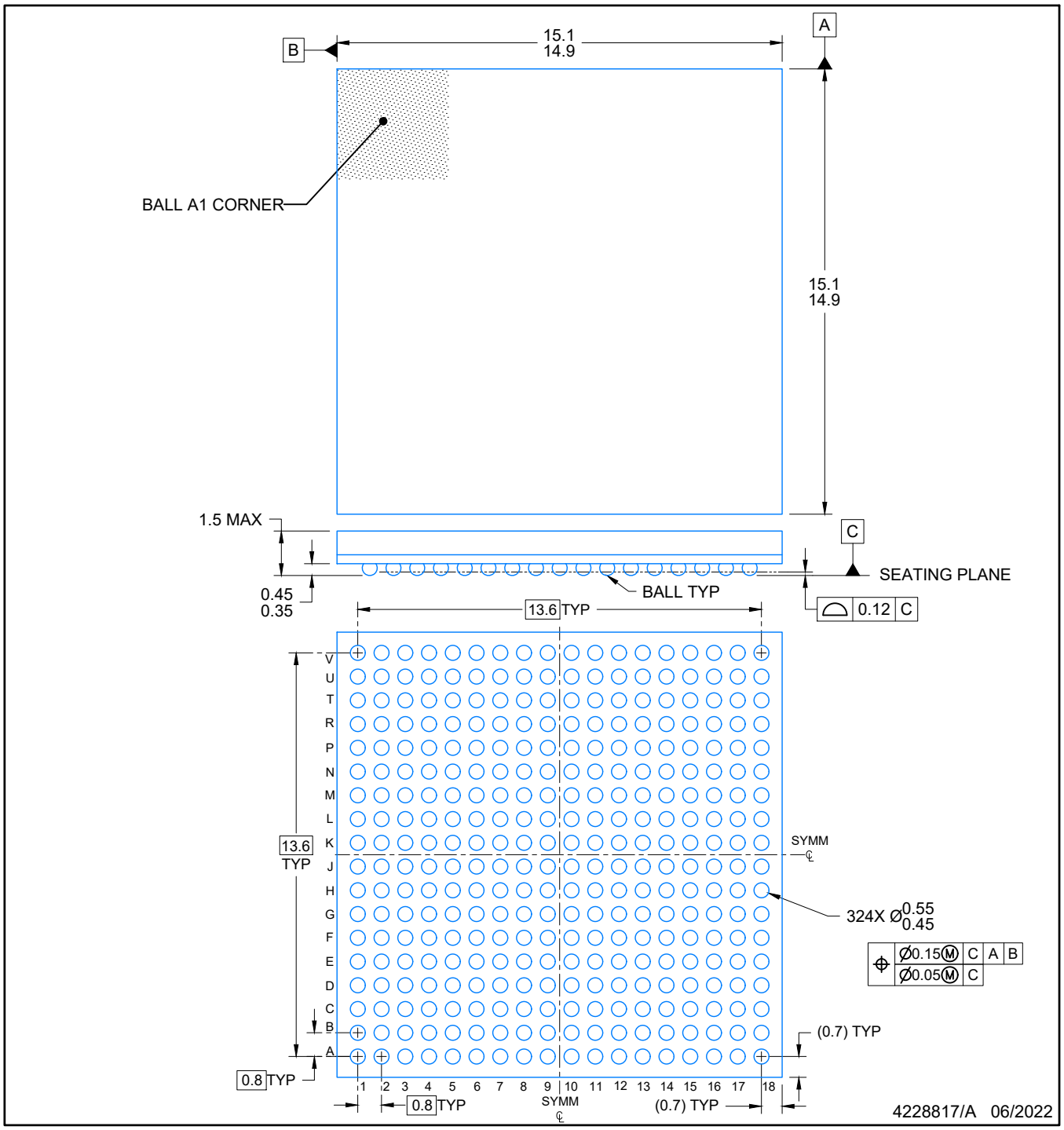

NOTES:

NanoFree is a trademark of Texas Instruments.

1. All linear dimensions are in millimeters. Any dimensions in parenthesis are for reference only. Dimensioning and tolerancing per ASME Y14.5M.
2. This drawing is subject to change without notice.

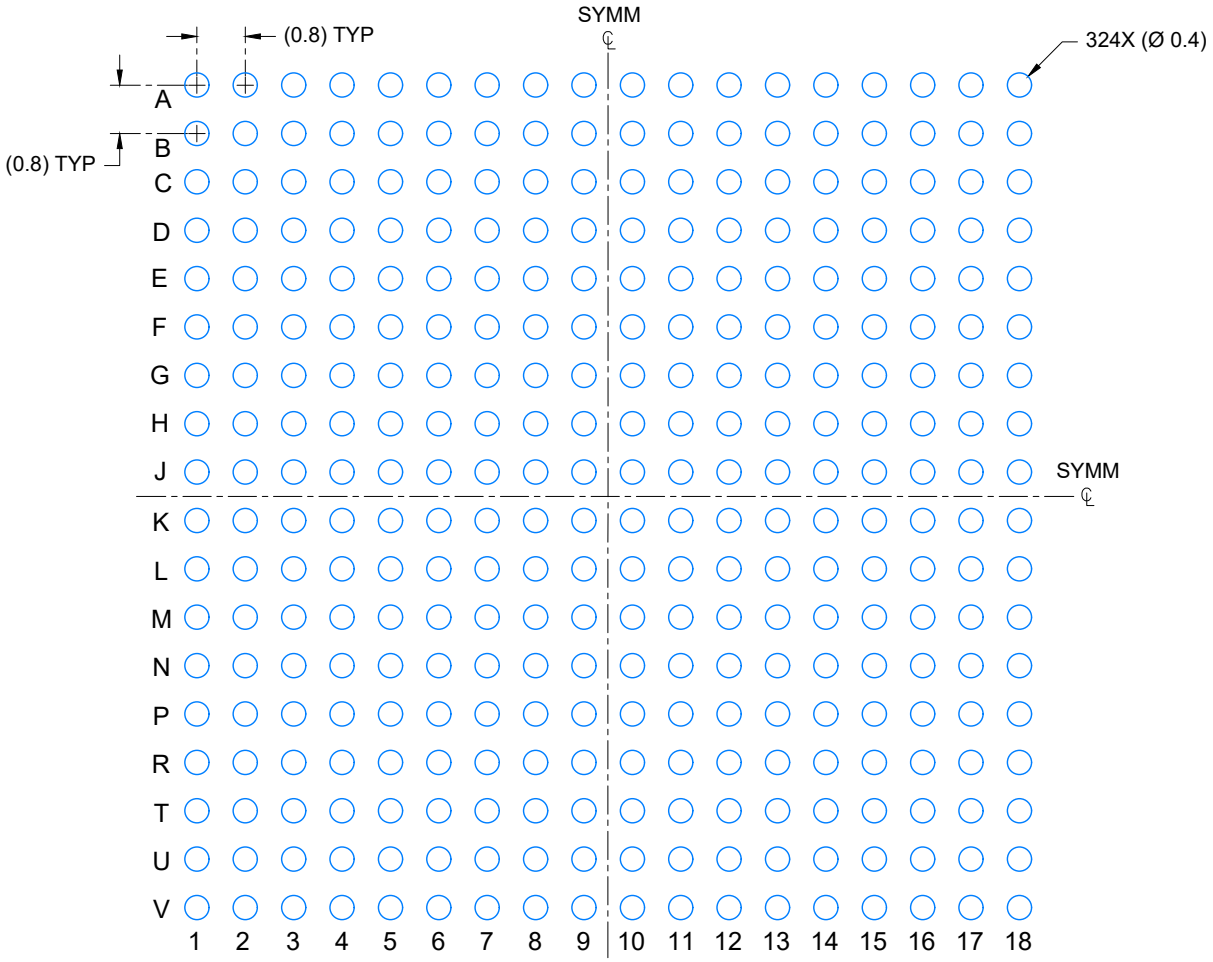

LAND PATTERN EXAMPLE

SCALE: 8X

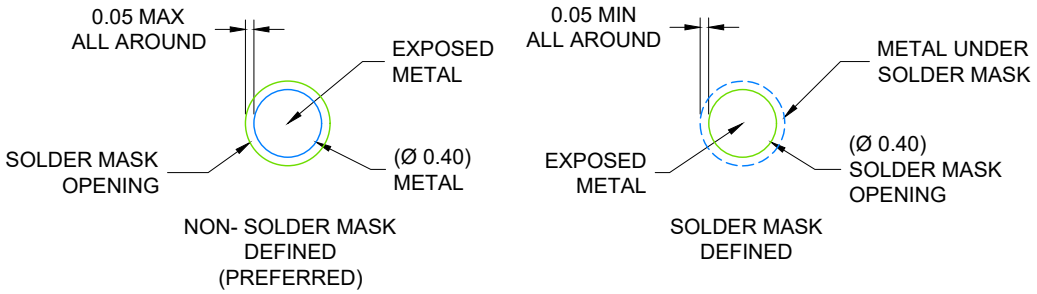

SOLDER MASK DETAILS

NOT TO SCALE

4228817/A 06/2022

NOTES: (continued)

3. Final dimensions may vary due to manufacturing tolerance considerations and also routing constraints. Refer to Texas Instruments Literature number SNVA009 (www.ti.com/lit/snva009).

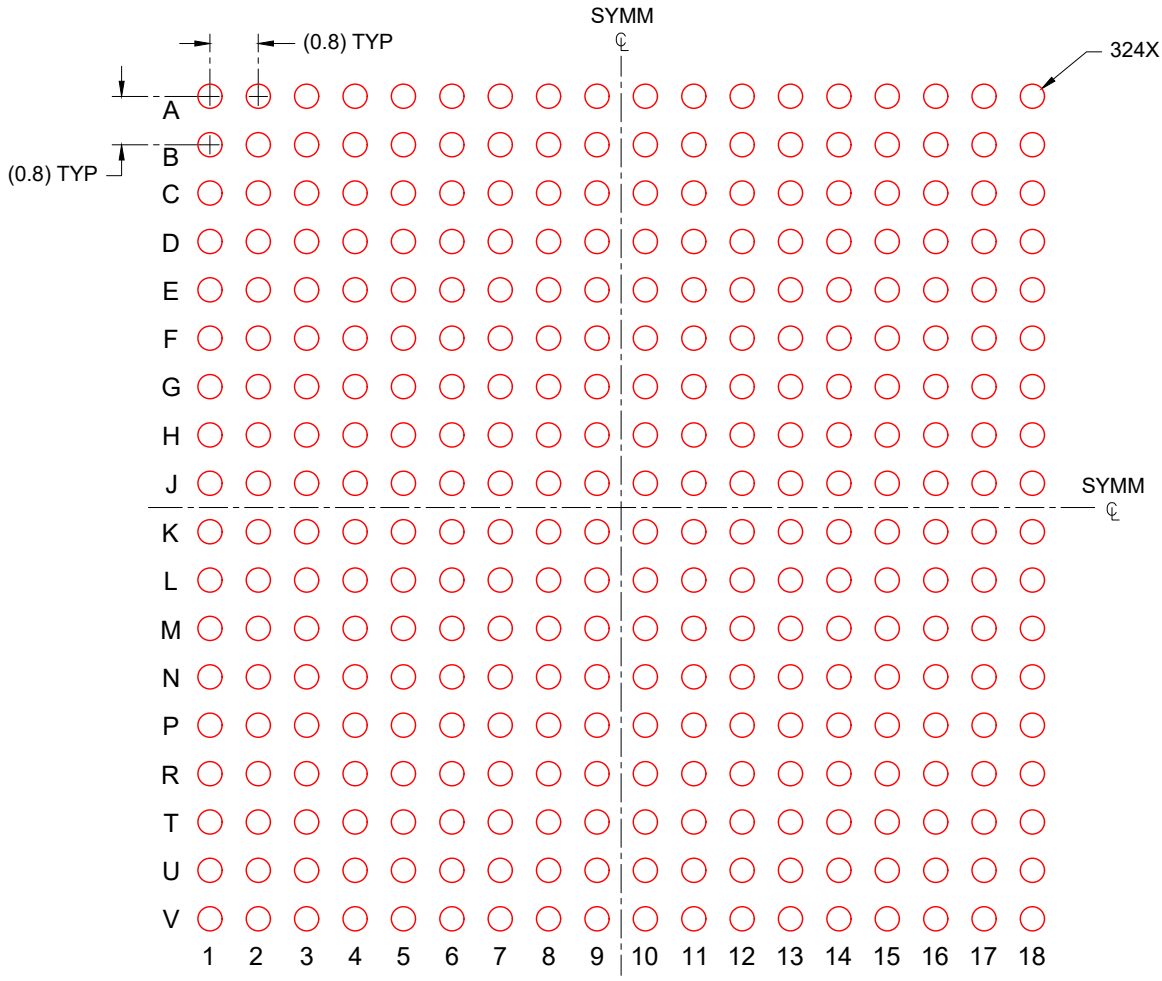

SOLDER PASTE EXAMPLE
BASED ON 0.150 mm THICK STENCIL
SCALE: 8X

4228817/A 06/2022

NOTES: (continued)

4. Laser cutting apertures with trapezoidal walls and rounded corners may offer better paste release.

重要なお知らせと免責事項

テキサス· インスツルメンツは、技術データと信頼性データ (データシートを含みます)、設計リソース (リファレンス デザインを含みます)、アプリケーションや設計に関する各種アドバイス、Web ツール、安全性情報、その他のリソースを、欠陥が存在する可能性のある「現状のまま」提供しており、商品性および特定目的に対する適合性の黙示保証、第三者の知的財産権の非侵害保証を含むいかなる保証も、明示的または黙示的にかかわらず拒否します。

これらのリソースは、 テキサス· インスツルメンツ製品を使用する設計の経験を積んだ開発者への提供を意図したものです。(1) お客様のアプリケーションに適した テキサス· インスツルメンツ製品の選定、(2) お客様のアプリケーションの設計、検証、試験、(3) お客様のアプリケーションに該当する各種規格や、その他のあらゆる安全性、セキュリティ、規制、または他の要件への確実な適合に関する責任を、お客様のみが単独で負うものとします。

上記の各種リソースは、予告なく変更される可能性があります。これらのリソースは、リソースで説明されている テキサス· インスツルメンツ製品を使用するアプリケーションの開発の目的でのみ、 テキサス· インスツルメンツはその使用をお客様に許諾します。これらのリソースに関して、他の目的で複製することや掲載することは禁止されています。 テキサス· インスツルメンツや第三者の知的財産権のライセンスが付与されている訳ではありません。お客様は、これらのリソースを自身で使用した結果発生するあらゆる申し立て、損害、費用、損失、責任について、 テキサス· インスツルメンツおよびその代理人を完全に補償するものとし、 テキサス· インスツルメンツは一切の責任を拒否します。

テキサス· インスツルメンツの製品は、 テキサス· インスツルメンツの販売条件、または ti.com やかかる テキサス· インスツルメンツ製品の関連資料などのいずれかを通じて提供する適用可能な条項の下で提供されています。 テキサス· インスツルメンツがこれらのリソースを提供することは、適用される テキサス· インスツルメンツの保証または他の保証の放棄の拡大や変更を意味するものではありません。

お客様がいかなる追加条項または代替条項を提案した場合でも、 テキサス· インスツルメンツはそれらに異議を唱え、拒否します。

郵送先住所：Texas Instruments, Post Office Box 655303, Dallas, Texas 75265
Copyright © 2025, Texas Instruments Incorporated