1.8V、2.5V、3.3V 出力付き CDCE913-Q1 および CDCEL913-Q1 プログラマブル 1-PLL VCXO クロック シンセサイザ

1 特長

- 車載アプリケーション認定済み
- 以下の結果で AEC-Q100 認定済み:
  - デバイス温度グレード
    - CDCE913-Q1 のグレード 1:動作時周囲温度範囲:-40℃～+125℃
    - CDCEL913-Q1 のグレード 3:動作時周囲温度範囲:-40℃～+85℃
  - デバイス HBM ESD 分類レベル H2
  - デバイス CDM ESD 分類レベル C6
- 機能安全対応
  - 機能安全システム設計に役立つ資料を利用可能
- システム内プログラミングおよび EEPROM
  - シリアル プログラム可能な揮発性レジスタ
  - 不揮発性 EEPROM に顧客設定を保存
- 柔軟な入力クロック設定の概念
  - 外部水晶振動子:8MHz～32MHz
  - オンチップ VCXO:プル範囲 ±150ppm
  - シングルエンドの LVCMOS:最高 160MHz
- 出力周波数を最高 230MHz まで自由に選択可能
- 低ノイズの PLL コア
  - PLL ループ フィルタ コンポーネントを内蔵
  - 短いジッタ時間 (標準値 50ps)
- 独立した出力供給ピン:
  - CDCE913-Q1:3.3V および 2.5V
  - CDCEL913-Q1:1.8V
- 柔軟なクロック ドライバ
  - 3 つのユーザ定義可能な制御入力 [S0、S1、S2] を、SSC 選択、周波数切り替え、出力イネーブル、電源オフなどに使用可能
  - ビデオ、オーディオ、USB、IEEE1394、RFID、Bluetooth®、WLAN、イーサネット、GPS に高精度のクロックを生成
  - TI-DaVinci™、OMAP™、DSP を使用して共通クロックの周波数を生成
  - SSC 変調をプログラム可能
  - 0PPM のクロック生成が可能
- 1.8V デバイス電源
- TSSOP パッケージ
- 開発およびプログラミング キットにより PLL の設計とプログラムが容易 (テキサス・インスツルメンツの Pro-Clock™)

2 アプリケーション

- クラスタ
- ヘッド ユニット
- ナビゲーション システム
- 先進運転支援システム (ADAS)

3 概要

CDCE913-Q1 および CDCEL913-Q1 デバイスは、モジュラー型フェーズ ロック ループ (PLL) ベースのプログラマブル クロック シンセサイザです。これらのデバイスには、出力クロック、入力信号、制御ピンなど柔軟でプログラム可能なオプションがあり、ユーザーは CDCE913-Q1 および CDCEL913-Q1 をそれぞれの仕様に合わせて構成できます。

CDCE913-Q1 および CDCEL913-Q1 は、単一の入力周波数から最大 3 つの出力クロックを生成できるため、基板面積とコストを削減できます。さらに、複数出力を備えたクロック ジェネレータは、複数の水晶振動子を 1 つのクロック ジェネレータで置き換えることができます。本デバイスは、システムの小型化やコスト効率の向上が進んでいる、ADAS のインフォテインメント システムやカメラ システムのヘッド ユニット アプリケーションやテレマティックス アプリケーションに最適です。

それぞれの出力は、内蔵の構成可能な PLL を使用して、230MHz までの任意のクロック周波数にシステム内でプログラム可能です。また、PLL は拡散スペクトル クロック (SSC) もサポートし、ダウンおよびセンター拡散をプログラム可能です。その結果、電磁干渉 (EMI) 性能が向上し、CISPR-25 などの業界規格の適合を可能とします。

3 つのユーザー定義制御ピンを使用して、周波数プログラミングと SSC のカスタマイズにアクセスできます。この結果、クロックの制御に追加のインターフェイスを使用する必要がなくなります。ユーザーのニーズに応じて、特定のパワーアップやパワーダウン シーケンスを定義することもできます。

パッケージ情報

部品番号	パッケージ(1)	パッケージ サイズ(2)
CDCE913-Q1	PW (TSSOP、14)	5mm × 6.4mm
CDCEL913-Q1		

(1) 利用可能なすべてのパッケージについては、データシートの末尾にある注文情報を参照してください。
(2) パッケージ サイズ (長さ×幅) は公称値であり、該当する場合はピンも含まれます。

このリソースの元の言語は英語です。翻訳は概要を便宜的に提供するもので、自動化ツール (機械翻訳) を使用していることがあり、TI では翻訳の正確性および妥当性につきましては一切保証いたしません。実際の設計などの前には、ti.com で必ず最新の英語版をご参照くださいますようお願いいたします。

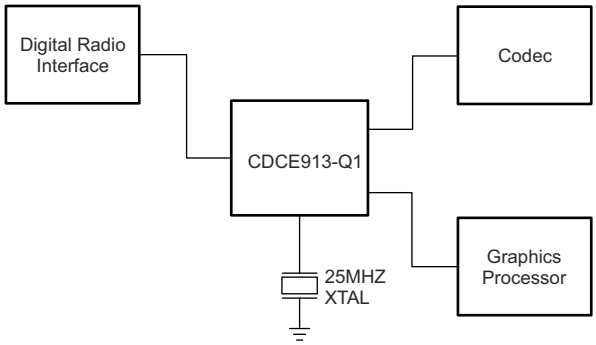

概略回路図

Copyright © 2024 Texas Instruments Incorporated

Table of Contents

1 特長.... 1
2 アプリケーション.... 1
3 概要.... 1
4 Device Comparison.... 3
5 Pin Configuration and Functions.... 4
6 Specifications.... 5
6.1 Absolute Maximum Ratings.... 5
6.2 ESD Ratings.... 5
6.3 Recommended Operating Conditions.... 5
6.4 Thermal Information.... 6
6.5 Electrical Characteristics.... 6
6.6 Timing Requirements.... 8
6.7 Typical Characteristics.... 9
7 Parameter Measurement Information.... 10
8 Detailed Description.... 11
8.1 Overview.... 11
8.2 Functional Block Diagram.... 11
8.3 Feature Description.... 12
8.4 Device Functional Modes.... 14
8.5 Programming.... 15
9 Application and Implementation.... 17
9.1 Application Information.... 17
9.2 Typical Application.... 17
9.3 Power Supply Recommendations.... 22
9.4 Layout.... 22
10 Register Maps.... 24
10.1 I²C Configuration Registers.... 24
11 デバイスおよびドキュメントのサポート.... 28
11.1 ドキュメントのサポート.... 28
11.2 ドキュメントの更新通知を受け取る方法.... 28
11.3 サポート・リソース.... 28
11.4 商標.... 28
11.5 静電気放電に関する注意事項.... 28
11.6 用語集.... 28
12 Revision History.... 29
13 Mechanical, Packaging, and Orderable Information.... 30

4 Device Comparison

表 4-1. Device Comparison

DEVICE	SUPPLY (V)	PLL	OUTPUT
CDCE913-Q1	2.5 to 3.3	1	3
CDCEL913-Q1	1.8	1	3
CDCE937-Q1	2.5 to 3.3	3	7
CDCEL937-Q1	1.8	3	7
CDCE949-Q1	2.5 to 3.3	4	9
CDCEL949-Q1	1.8	4	9

5 Pin Configuration and Functions

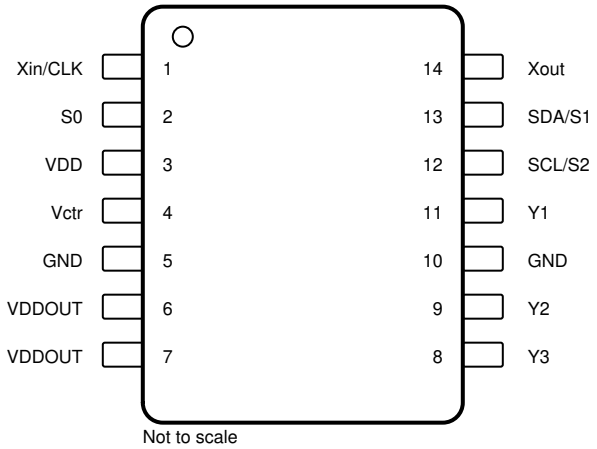

図 5-1. PW Package 14-Pin TSSOP Top View

表 5-1. Pin Functions

PIN		TYPE(1)	DESCRIPTION
NAME	NO.		
GND	5, 10	G	Ground
SCL/S2	12	I	SCL: serial clock input LVCMOS (default configuration), 500-kΩ internal pullup; or S2: user-programmable control input, LVCMOS input, 500-kΩ internal pullup
SDA/S1	13	I/O or I	SDA: bidirectional serial data input/output (default configuration), LVCMOS internal pullup; or S1: user-programmable control input, LVCMOS input, 500-kΩ internal pullup
S0	2	I	User-programmable control input S0, LVCMOS input, 500-kΩ internal pullup
V_{ctr}	4	I	VCXO control voltage (leave open or pull up when not used)
V_{DD}	3	P	1.8-V power supply for the device
V_{DDOUT}	6, 7	P	CDCE913-Q1: 3.3-V or 2.5-V supply for all outputs
			CDCEL913-Q1: 1.8-V supply for all outputs
Xin/CLK	1	I	Crystal oscillator input or LVCMOS clock input (selectable through the I^2C bus)
Xout	14	O	Crystal oscillator output (leave open or pull up when not used)
Y1	11	O	LVCMOS output
Y2	9	O	LVCMOS output
Y3	8	O	LVCMOS output

(1) G = Ground, I = Input, O = Output, P = Power

Copyright © 2024 Texas Instruments Incorporated

6 Specifications

6.1 Absolute Maximum Ratings

over operating free-air temperature range (unless otherwise noted)[1]

			MIN	MAX	UNIT
V_{DD}	Supply voltage		–0.5	2.5	V
V_{DDOUT}	Output clocks supply voltage	CDCEL913-Q1	–0.5	V_{DD}	V
		CDCE913-Q1	–0.5	3.6 + 0.5	
V_I	Input voltage[2] [3]		–0.5	V_{DD} + 0.5	V
V_O	Output voltage[2]		–0.5	V_{DDOUT} + 0.5	V
I_I	Input current (V_I < 0, V_I > V_{DD})			20	mA
I_O	Continuous output current			50	mA
T_J	Maximum junction temperature			125	°C
T_{stg}	Storage temperature		–65	150	

(1) Stresses beyond those listed under *Absolute Maximum Ratings* may cause permanent damage to the device. These are stress ratings only, and functional operation of the device at these or any other conditions beyond those indicated under *Recommended Operating Conditions* is not implied. Exposure to absolute-maximum-rated conditions for extended periods may affect device reliability.
(2) The input and output negative voltage ratings may be exceeded if the input and output clamp-current ratings are observed.
(3) SDA and SCL can go up to 3.6 V, as stated in the *Recommended Operating Conditions* table.

6.2 ESD Ratings

			VALUE	UNIT
$V_{(ESD)}$	Electrostatic discharge	Human-body model (HBM), per AEC Q100-002[1]	±2000	V
		Charged-device model (CDM), per AEC Q100-011[2]	±1000	

(1) AEC Q100-002 indicates that HBM stressing shall be in accordance with the ANSI/ESDA/JEDEC JS-001 specification.
(2) Charged-device model ESD rating for corner pins is 750 V.

6.3 Recommended Operating Conditions

			MIN	NOM	MAX	UNIT
V_{DD}	Device supply voltage		1.7	1.8	1.9	V
V_O	Output Yx supply voltage, V_{DDOUT}	CDCE913-Q1	2.3		3.6	V
		CDCEL913-Q1	1.7		1.9	
V_{IL}	Low-level input voltage, LVCMOS				0.3 × V_{DD}	V
V_{IH}	High-level input voltage, LVCMOS		0.7 × V_{DD}			V
$V_{I(thresh)}$	Input voltage threshold, LVCMOS			0.5 × V_{DD}		V
$V_{I(S)}$	Input voltage	S0	0		1.9	V
		S1, S2, SDA, SCL ($V_{I(thresh)}$ = 0.5 V_{DD})	0		3.6	
$V_{I(CLK)}$	Input voltage range CLK		0		1.9	V
I_{OH}, I_{OL}	Output current	V_{DDOUT} = 3.3 V			±12	mA
		V_{DDOUT} = 2.5 V			±10	
		V_{DDOUT} = 1.8 V			±8	
C_L	Output load, LVCMOS				15	pF
T_A	Operating ambient temperature	CDCE913-Q1	–40		125	°C
		CDCEL913-Q1	–40		85	

		MIN	NOM	MAX	UNIT
CRYSTAL AND VCXO SPECIFICATIONS (1)					
f_{Xtal}	Crystal input frequency (fundamental mode)	8	27	32	MHz
ESR	Effective series resistance			100	Ω
f_{PR}	Pulling range (0 V ≤ V_{ctr} ≤ 1.8 V)(2)	±120	±150		ppm
V_{ctr}	Frequency control voltage	0		V_{DD}	V
C_0 / C_1	Pullability ratio			220	
C_L	On-chip load capacitance at Xin and Xout	0		20	pF

(1) For more information about VCXO configuration and crystal recommendation, see *VCXO Application Guideline for CDCE(L)9xx Family* (SCAA085).
(2) Pulling range depends on crystal type, on-chip crystal load capacitance, and PCB stray capacitance; pulling range of minimum ±120 ppm applies for crystal listed in *VCXO Application Guideline for CDCE(L)9xx Family* (SCAA085).

6.4 Thermal Information

THERMAL METRIC(1) (2)		CDCE913-Q1, CDCEL913-Q1 PW (TSSOP) 14 PINS	UNIT
$R_{\theta JA}$	Junction-to-ambient thermal resistance	110.6	°C/W
$R_{\theta JC(top)}$	Junction-to-case (top) thermal resistance	35.4	°C/W
$R_{\theta JB}$	Junction-to-board thermal resistance	53.6	°C/W
ψ_{JT}	Junction-to-top characterization parameter	2.1	°C/W
ψ_{JB}	Junction-to-board characterization parameter	52.8	°C/W
$R_{\theta JC(bot)}$	Junction-to-case (bottom) thermal resistance	—	°C/W

(1) For more information about traditional and new thermal metrics, see the *Semiconductor and IC Package Thermal Metrics* application report (SPRA953).
(2) The package thermal impedance is calculated in accordance with JESD 51 and JEDEC2S2P (high-K board).

6.5 Electrical Characteristics

over recommended operating free-air temperature range (unless otherwise noted)

		TEST CONDITIONS		MIN	TYP(1)	MAX	UNIT
OVERALL PARAMETER							
I_{DD}	Supply current (see 図 6-1)	All outputs off, f_{CLK} = 27 MHz, f_{VCO} = 135 MHz, f_{OUT} = 27 MHz	All PLLS on		11		mA
			Per PLL		9		
$I_{DD(OUT)}$	Supply current (see 図 6-2 and 図 6-3)	No load, all outputs on, f_{OUT} = 27 MHz	V_{DDOUT} = 3.3 V		1.3		mA
			V_{DDOUT} = 1.8 V		0.7		
$I_{DD(PD)}$	Power-down current. Every circuit powered down except I^2C	f_{IN} = 0 MHz, V_{DD} = 1.9 V			30		µA
$V_{(PUC)}$	Supply voltage V_{DD} threshold for power-up control circuit			0.85		1.45	V
f_{VCO}	VCO frequency range of PLL			80		230	MHz
f_{OUT}	LVCMOS output frequency	V_{DDOUT} = 3.3 V				230	MHz
		V_{DDOUT} = 1.8 V				230	
LVCMOS PARAMETER							
V_{IK}	LVCMOS input voltage	V_{DD} = 1.7 V, I_I = –18 mA				–1.2	V
I_I	LVCMOS input current	V_I = 0 V or V_{DD}, V_{DD} = 1.9 V				±5	µA
I_{IH}	LVCMOS input current for S0, S1, and S2	V_I = V_{DD}, V_{DD} = 1.9 V				5	µA
I_{IL}	LVCMOS input current for S0, S1, and S2	V_I = 0 V, V_{DD} = 1.9 V				–4	µA

Copyright © 2024 Texas Instruments Incorporated

over recommended operating free-air temperature range (unless otherwise noted)

		TEST CONDITIONS	MIN	TYP[1]	MAX	UNIT
C_I	Input capacitance at Xin/CLK	V_{ICIk} = 0 V or V_{DD}		6		pF
	Input capacitance at Xout	V_{IXout} = 0 V or V_{DD}		2		
	Input capacitance at S0, S1, and S2	V_{IS} = 0 V or V_{DD}		3		
CDCE913-Q1, LVCMOS PARAMETER FOR V_{DDOUT} = 3.3-V MODE						
V_{OH}	LVCMOS high-level output voltage	V_{DDOUT} = 3 V, I_{OH} = –0.1 mA	2.9			V
		V_{DDOUT} = 3 V, I_{OH} = –8 mA	2.4			
		V_{DDOUT} = 3 V, I_{OH} = –12 mA	2.2			
V_{OL}	LVCMOS low-level output voltage	V_{DDOUT} = 3 V, I_{OL} = 0.1 mA			0.1	V
		V_{DDOUT} = 3 V, I_{OL} = 8 mA			0.5	
		V_{DDOUT} = 3 V, I_{OL} = 12 mA			0.8	
t_{PLH}, t_{PHL}	Propagation delay	PLL bypass		3.2		ns
t_r, t_f	Rise and fall time	V_{DDOUT} = 3.3 V (20%–80%)		0.6		ns
$t_{jit(cc)}$	Cycle-to-cycle jitter for Y1 to Y3[2] [3]	1 PLL switching, Y2-to-Y3, 10,000 cycles		50	200	ps
$t_{jit(per)}$	Peak-to-peak period jitter for Y1 to Y3[2] [3]	1 PLL switching, Y2-to-Y3		60	200	ps
$t_{sk(o)}$	Output skew (see 表 8-2)[4]	f_{OUT} = 50 MHz, Y1-to-Y3			440	ps
odc	Output duty cycle [5]	f_{VCO} = 100 MHz, Pdiv = 1	45%		55%	
CDCE913-Q1, LVCMOS PARAMETER FOR V_{DDOUT} = 2.5-V MODE						
V_{OH}	LVCMOS high-level output voltage	V_{DDOUT} = 2.3 V, I_{OH} = –0.1 mA	2.2			V
		V_{DDOUT} = 2.3 V, I_{OH} = –6 mA	1.7			
		V_{DDOUT} = 2.3 V, I_{OH} = –10 mA	1.6			
V_{OL}	LVCMOS low-level output voltage	V_{DDOUT} = 2.3 V, I_{OL} = 0.1 mA			0.1	V
		V_{DDOUT} = 2.3 V, I_{OL} = 6 mA			0.5	
		V_{DDOUT} = 2.3 V, I_{OL} = 10 mA			0.7	
t_{PLH}, t_{PHL}	Propagation delay	PLL bypass		3.6		ns
t_r, t_f	Rise and fall time	V_{DDOUT} = 2.5 V (20%–80%)		0.8		ns
$t_{jit(cc)}$	Cycle-to-cycle jitter for Y1 to Y3[2] [3]	1 PLL switching, Y2-to-Y3, 10,000 cycles		50	200	ps
$t_{jit(per)}$	Peak-to-peak period jitter for Y1 to Y3[2] [3]	1 PLL switching, Y2-to-Y3		60	200	ps
$t_{sk(o)}$	Output skew (see 表 8-2)[4]	f_{OUT} = 50 MHz, Y1-to-Y3			440	ps
odc	Output duty cycle[5]	f_{VCO} = 100 MHz, Pdiv = 1	45%		55%	
CDCEL913-Q1, LVCMOS PARAMETER FOR V_{DDOUT} = 1.8-V MODE						
V_{OH}	LVCMOS high-level output voltage	V_{DDOUT} = 1.7 V, I_{OH} = –0.1 mA	1.6			V
		V_{DDOUT} = 1.7 V, I_{OH} = –4 mA	1.4			
		V_{DDOUT} = 1.7 V, I_{OH} = –8 mA	1.1			
V_{OL}	LVCMOS low-level output voltage	V_{DDOUT} = 1.7 V, I_{OL} = 0.1 mA			0.1	V
		V_{DDOUT} = 1.7 V, I_{OL} = 4 mA			0.3	
		V_{DDOUT} = 1.7 V, I_{OL} = 8 mA			0.6	
t_{PLH}, t_{PHL}	Propagation delay	PLL bypass		2.6		ns
t_r, t_f	Rise and fall time	V_{DDOUT} = 1.8 V (20%–80%)		0.7		ns
$t_{jit(cc)}$	Cycle-to-cycle jitter for Y1 to Y3[2] [3]	1 PLL switching, Y2-to-Y3, 10,000 cycles		80	110	ps
$t_{jit(per)}$	Peak-to-peak period jitter for Y1 to Y3[2] [3]	1 PLL switching, Y2-to-Y3		100	130	ps
$t_{sk(o)}$	Output skew (see 表 8-2)[4]	f_{OUT} = 50 MHz, Y1-to-Y3			50	ps
odc	Output duty cycle[5]	f_{VCO} = 100 MHz, Pdiv = 1	45%		55%	
I^2C PARAMETER						
V_{IK}	SCL and SDA input clamp voltage	V_{DD} = 1.7 V, I_I = –18 mA			–1.2	V
I_{IH}	SCL and SDA input current	V_I = V_{DD}, V_{DD} = 1.9 V			±10	μA
V_{IH}	I^2C input high voltage[6]		0.7 × V_{DD}			V
V_{IL}	I^2C input low voltage[6]				0.3 × V_{DD}	V
V_{OL}	SDA low-level output voltage	I_{OL} = 3 mA, V_{DD} = 1.7 V			0.2 × V_{DD}	V
C_I	SCL-SDA input capacitance	V_I = 0 V or V_{DD}		3	10	pF

over recommended operating free-air temperature range (unless otherwise noted)

		TEST CONDITIONS	MIN	TYP(1)	MAX	UNIT
EEPROM SPECIFICATION						
EEcyc	Programming cycles of EEPROM		100	1000		cycles
EEret	Data retention		10			years

(1) All typical values are at respective nominal V_{DD}.
(2) Jitter depends on configuration. Jitter data is for input frequency = 27 MHz, f_{VCO} = 108 MHz, f_{OUT} = 27 MHz (measured at Y2).
(3) Y1 supplied by PLL1 and configured to same frequency as Y2.
(4) The tsk(o) specification is only valid for equal loading of each bank of outputs, and the outputs are generated from the same divider.
(5) odc depends on the output rise and fall time (t_r and t_f); data sampled on the rising edge (t_r)
(6) SDA and SCL pins are 3.3-V tolerant.

6.6 Timing Requirements

over recommended ranges of supply voltage, load, and operating free-air temperature

			MIN	NOM	MAX	UNIT
CLK_IN						
f_{CLK}	LVCMOS clock input frequency	PLL bypass mode	0		160	MHz
		PLL mode	8		160	
t_r and t_f	Rise and fall time, CLK signal (20% to 80%)				3	ns
	Duty cycle of CLK at V_{DD} / 2		40%		60%	
I^2C (SEE 図 8-8)						
f_{SCL}	SCL clock frequency	Standard mode	0		100	kHz
		Fast mode	0		400	
$t_{su(START)}$	START setup time (SCL high before SDA low)	Standard mode	4.7			µs
		Fast mode	0.6			
$t_{h(START)}$	START hold time (SCL low after SDA low)	Standard mode	4			µs
		Fast mode	0.6			
$t_{w(SCLL)}$	SCL low-pulse duration	Standard mode	4.7			µs
		Fast mode	1.3			
$t_{w(SCLH)}$	SCL high-pulse duration	Standard mode	4			µs
		Fast mode	0.6			
$t_{h(SDA)}$	SDA hold time (SDA valid after SCL low)	Standard mode	0		3.45	µs
		Fast mode	0		0.9	
$t_{su(SDA)}$	SDA setup time	Standard mode	250			ns
		Fast mode	100			
t_r	SCL-SDA input rise time	Standard mode			1000	ns
		Fast mode			300	
t_f	SCL-SDA input fall time				300	ns
$t_{su(STOP)}$	STOP setup time	Standard mode	4			µs
		Fast mode	0.6			
t_{BUS}	Bus free time between a STOP and START condition	Standard mode	4.7			µs
		Fast mode	1.3			

Copyright © 2024 Texas Instruments Incorporated

6.7 Typical Characteristics

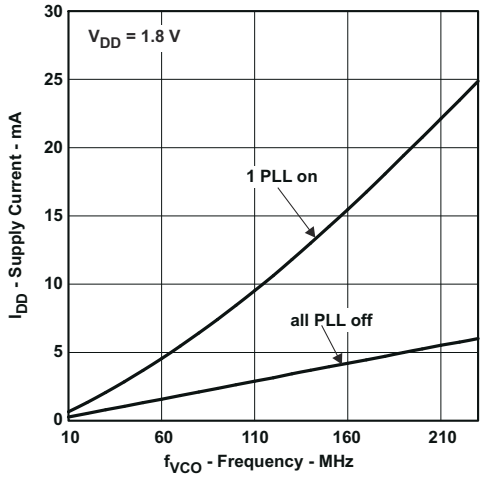

図 6-1. CDCE913-Q1 or CDCEL913-Q1 Supply Current vs PLL Frequency

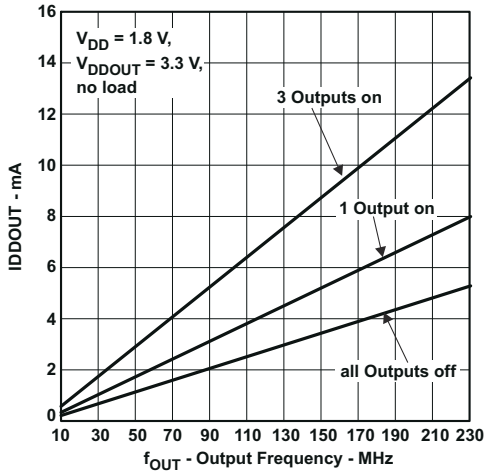

図 6-2. CDCE913-Q1 Output Current vs Output Frequency

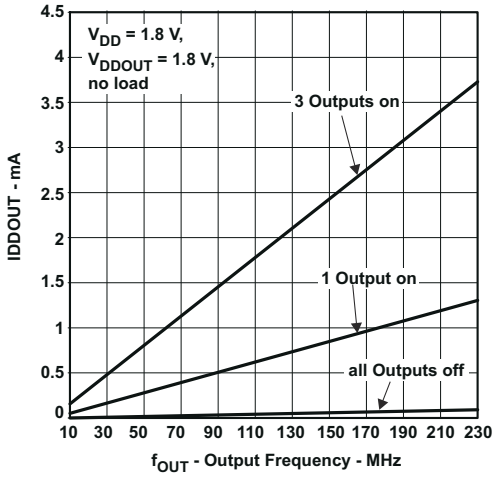

図 6-3. CDCEL913-Q1 Output Current vs Output Frequency

7 Parameter Measurement Information

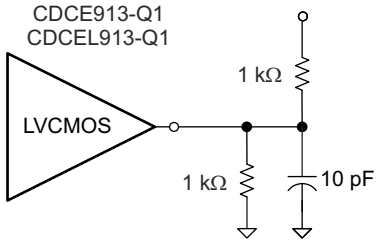

図 7-1. Test Load

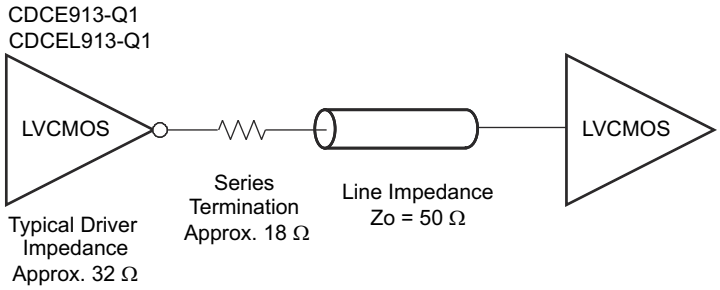

図 7-2. Test Load for 50-Ω Board Environment

Copyright © 2024 Texas Instruments Incorporated

8 Detailed Description

8.1 Overview

The CDCE913-Q1 and CDCEL913-Q1 devices are modular PLL-based, low-cost, high-performance, programmable clock synthesizers, multipliers, and dividers. They generate up to three output clocks from a single input frequency. Each output can be programmed in-system for any clock frequency up to 230 MHz, using the integrated configurable PLL.

The CDCE913-Q1 and CDCEL913-Q1 devices have separate output supply pins, V_{DDOUT}, with output of 1.8 V for the CDCEL913-Q1 device and 2.5 V to 3.3 V for the CDCE913-Q1 device. Additionally, each device requires a 1.8-V supply applied to the VDD pin for the device to operate.

The input accepts an external crystal or LVCMOS clock signal. If an external crystal is used, an on-chip load capacitor is adequate for most applications. The value of the load capacitor is programmable from 0 pF to 20 pF. Additionally, a selectable on-chip VCXO allows synchronization of the output frequency to an external control signal, that is, the PWM signal.

The deep M / N divider ratio allows the generation of zero-ppm audio-video, networking (WLAN, Bluetooth, Ethernet, GPS) or interface (USB, IEEE1394, memory stick) clocks from, for example, a 27-MHz reference input frequency.

The PLL supports spread-spectrum clocking (SSC). SSC can be center-spread or down-spread clocking, which is a common technique to reduce electromagnetic interference (EMI).

Based on the PLL frequency and the divider settings, the internal loop filter components are automatically adjusted to achieve high stability and optimized jitter transfer characteristics.

The device supports nonvolatile EEPROM programming for easy customization of the device to the application. The device is preset to a factory default configuration (see *Default Device Configuration*) that can be reprogrammed to a different application configuration before PCB assembly, or reprogrammed by in-system programming. All device settings are programmable through the SDA-SCL bus, a 2-wire serial interface.

Three programmable control inputs, S0, S1, and S2, can be used to select different frequencies, change SSC setting for lowering EMI, or control other features such as outputs disabled to low, outputs in Hi-Z state, power down, PLL bypass, and so forth).

The CDCE913-Q1 device operates in a temperature range of –40°C to +125°C, and the CDCEL913-Q1 device operates in a temperature range of –40°C to 85°C.

8.2 Functional Block Diagram

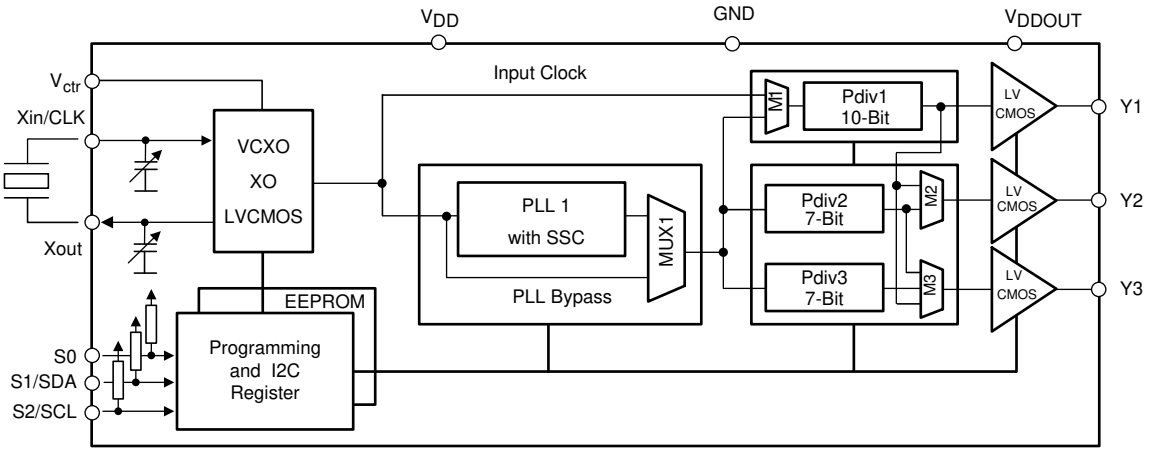

Copyright © 2016, Texas Instruments Incorporated

8.3 Feature Description

8.3.1 Control Terminal Configuration

The CDCE913-Q1 and CDCEL913-Q1 devices have three user-definable control terminals (S0, S1, and S2), which allow external control of device settings. They can be programmed to any of the following functions:

- Spread-spectrum clocking selection → spread type and spread amount selection
- Frequency selection → switching between any of two user-defined frequencies
- Output state selection → output configuration and power-down control

The user can predefine up to eight different control settings. 表 8-1 and 表 8-2 explain these settings.

表 8-1. Control Terminal Definition

EXTERNAL CONTROL BITS	PLL1 SETTING			Y1 SETTING
Control function	PLL frequency selection	SSC selection	Output Y2 and Y3 selection	Output Y1 and power-down selection

表 8-2. PLLx Setting (Can Be Selected for Each PLL Individually)(1)

SSCx [3 Bits]			CENTER	DOWN
SSC SELECTION (CENTER AND DOWN)				
0	0	0	0% (off)	0% (off)
0	0	1	±0.25%	–0.25%
0	1	0	±0.5%	–0.5%
0	1	1	±0.75%	–0.75%
1	0	0	±1.0%	–1.0%
1	0	1	±1.25%	–1.25%
1	1	0	±1.5%	–1.5%
1	1	1	±2.0%	–2.0%

(1) Center and down-spread, Frequency0, Frequency1, State0, and State1 are user-definable in PLLx configuration register.

表 8-3. PLLx Setting, Frequency Selection (Can Be Selected for Each PLL Individually)(1)

FSx	FUNCTION
0	Frequency0
1	Frequency1

(1) Frequency0 and Frequency1 can be any frequency within the specified f_{VCO} range.

表 8-4. PLLx Setting, Output Selection (Y2, Y3)(1)

Y2, Y3	FUNCTION
0	State0
1	State1

(1) State0 or State1 selection is valid for both outputs of the corresponding PLL module and can be power down, Hi-Z state, low, or active.

Copyright © 2024 Texas Instruments Incorporated

表 8-5. Y1 Setting(1)

Y1	FUNCTION
0	State 0
1	State 1

(1) State0 and State1 are user-definable in the generic configuration register and can be power down, Hi-Z state, low, or active.

The S1/SDA and S2/SCL pins of the CDCE913-Q1 and CDCEL913-Q1 devices are dual-function pins. In the default configuration, they are defined as SDA and SCL for the serial programming interface. They can be programmed as control pins (S1 and S2) by setting the appropriate bits in the EEPROM. Changes to the control register (Bit [*6*] of byte *02h*) have no effect until they are written into the EEPROM.

When they are set as control pins, the serial programming interface is no longer available. However, if V_{DDOUT} is forced to GND, the two control pins, S1 and S2, temporally act as serial programming pins (SDA and SCL).

S0 is *not* a multi-use pin; it is a control pin only.

8.3.2 Default Device Configuration

The internal EEPROM of the CDCE913-Q1 and CDCEL913-Q1 devices is preconfigured with a factory default configuration, as shown in 図 8-1 The input frequency is passed through the output as a default, thus allowing the device to operate in default mode without the extra production step of programming it. The default setting appears after power is supplied or after a power-down–power-up sequence until the device is reprogrammed by the user to a different application configuration. A new register setting is programmed through the serial I²C interface.

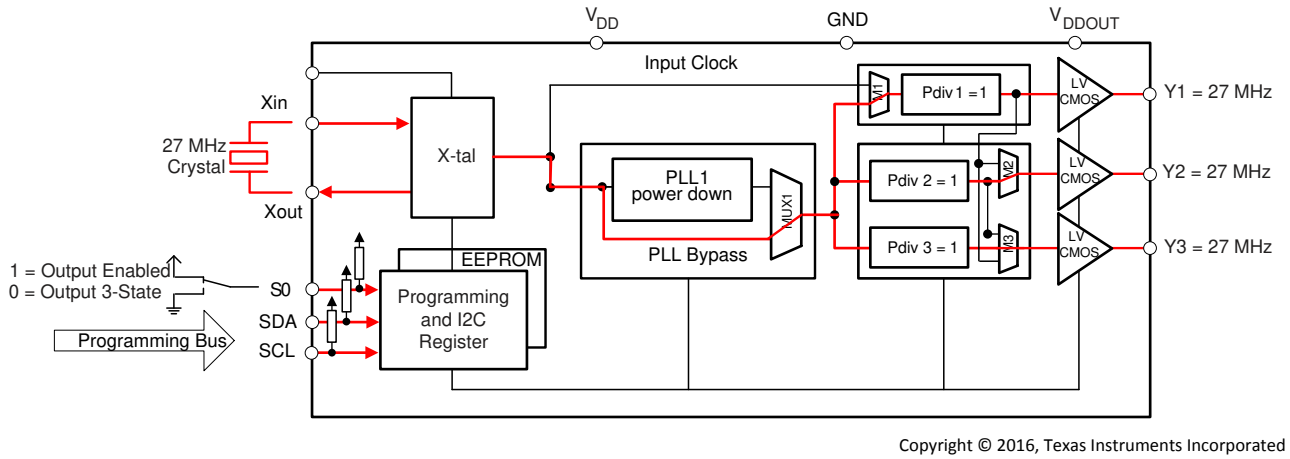

図 8-1. Default Configuration

表 8-6 shows the factory default setting for the Control Terminal register. While eight different register settings are possible, in the default configuration, only the first two settings (0 and 1) can be selected with S0, as S1 and S2 are configured as programming pins in default mode.

表 8-6. Factory Default Setting for Control Terminal Register(1)

			Y1	PLL1 SETTINGS		
EXTERNAL CONTROL PINS			OUTPUT SELECTION	FREQUENCY SELECTION	SSC SELECTION	OUTPUT SELECTION
S2	*S1*	*S0*	*Y1*	*FS1*	*SSC1*	Y2Y3
SCL (I²C)	SDA (I²C)	0	3-state	f_{VCO1_0}	Off	*Hi-Z state*

表 8-6. Factory Default Setting for Control Terminal Register(1) (続き)

	Y1	PLL1 SETTINGS		
EXTERNAL CONTROL PINS	OUTPUT SELECTION	FREQUENCY SELECTION	SSC SELECTION	OUTPUT SELECTION
SCL (I^2C) SDA (I^2C) 1	*Enabled*	f_{VCO1_0}	Off	*Enabled*

(1) In default mode or when programmed respectively, S1 and S2 act as serial programming interface, I^2C. They do not have any control-pin function but they are internally interpreted as if S1 = 0 and S2 = 0. However, S0 is a control pin, which in the default mode switches all outputs ON or OFF (as previously predefined).

8.3.3 I^2C Serial Interface

The CDCE913-Q1 and CDCEL913-Q1 devices operate as a target device on the 2-wire serial I^2C bus, compatible with the popular SMBus or I^2C specification. The devices operate in the standard-mode transfer (up to
100 kbps) and fast-mode transfer (up to 400 kbps), and supports 7-bit addressing.

The S1/SDA and S2/SCL pins of the CDCE913-Q1 and CDCEL913-Q1 devices are dual-function pins. In the default configuration, the pins are used as the I^2C serial programming interface. The pins can be reprogrammed as general-purpose control pins, S1 and S2, by changing the corresponding EEPROM setting, byte *02h*, bit [*6*].

8.3.4 Data Protocol

The device supports *Byte Write and Byte Read* and *Block Write and Block Read* operations.

For *Byte Write/Read* operations, the system controller can individually access addressed bytes.

For *Block Write/Read* operations, the bytes are accessed in sequential order from lowest to highest byte (with most-significant bit first) with the ability to stop after any complete byte has been transferred. The numbers of bytes read out are defined by the byte count in the generic configuration register. At the *Block Read* instruction, all bytes defined in byte count must be read out to finish the read cycle correctly.

When a byte has been sent, the byte is written into the internal register and is effective immediately. This applies to each transferred byte, regardless of whether this is a *Byte Write* or a *Block Write* sequence.

If the EEPROM write cycle is initiated, the internal registers are written into the EEPROM. Data can be read out during the programming sequence (*Byte Read* or *Block Read*). The programming status can be monitored by *EEPIP*, byte 01h–bit 6. Before beginning EEPROM programming, pull CLKIN LOW. CLKIN must be held LOW for the duration of EEPROM programming. After initiating EEPROM programming with *EEWRITE*, byte 06h-bit 0, do not write to the device registers until *EEPIP* is read back as a 0.

The offset of the indexed byte is encoded in the command code, as described in 表 8-8.

表 8-7. Target Receiver Address (7 Bits)

DEVICE	A6	A5	A4	A3	A2	A1(1)	A0(1)	R/ $\overline{W}$
CDCE913-Q1 and CDCEL913-Q1	1	1	0	0	1	0	1	1/0
CDCEx925	1	1	0	0	1	0	0	1/0
CDCEx937	1	1	0	1	1	0	1	1/0
CDCEx949	1	1	0	1	1	0	0	1/0

(1) Address bits A0 and A1 are programmable through the I^2C bus (byte *01*, bits [*1:0*]. This allows addressing up to 4 devices connected to the same I^2C bus. The least-significant bit of the address byte designates a write or read operation.

8.4 Device Functional Modes

8.4.1 SDA and SCL Hardware Interface

図 8-2 shows how the CDCE913-Q1 and CDCEL913-Q1 clock synthesizer is connected to the I^2C serial interface bus. Multiple devices can be connected to the bus, but it may be necessary to reduce the speed (400 kHz is the maximum) if many devices are connected.

Copyright © 2024 Texas Instruments Incorporated

The pullup resistors (R_P) depend on the supply voltage, bus capacitance, and number of connected devices. The recommended pullup value is 4.7 kΩ. The resistor must meet the minimum sink current of 3 mA at V_{OL}max = 0.4 V for the output stages (for more details see the SMBus or I²C bus specification).

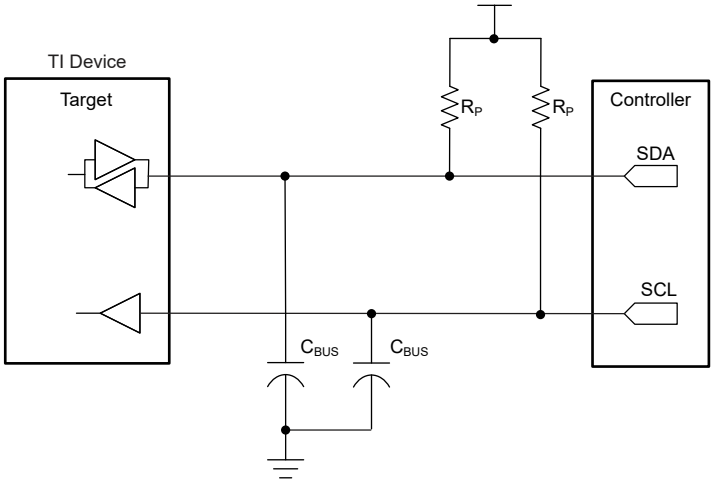

図 8-2. I²C Hardware Interface

8.5 Programming

表 8-8. Command Code Definition

BIT	DESCRIPTION
7	0 = *Block Read* or *Block Write* operation 1 = *Byte Read* or *Byte Write* operation
(6:0)	Byte offset for *Byte Read*, *Block Read*, *Byte Write*, and *Block Write* operations

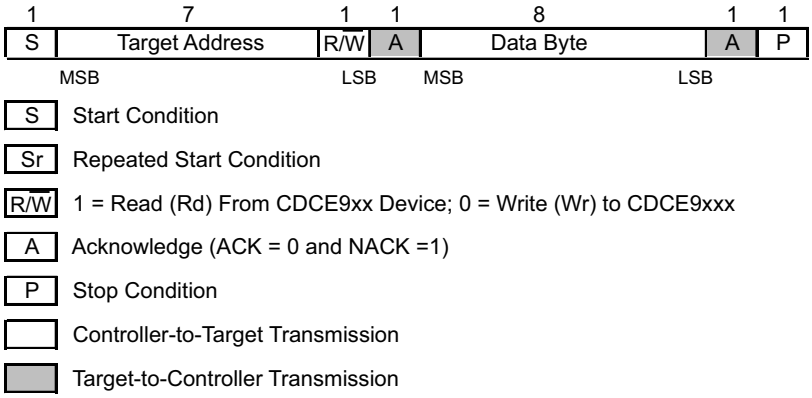

図 8-3. Generic Programming Sequence

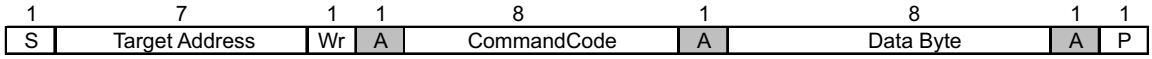

図 8-4. Byte Write Protocol

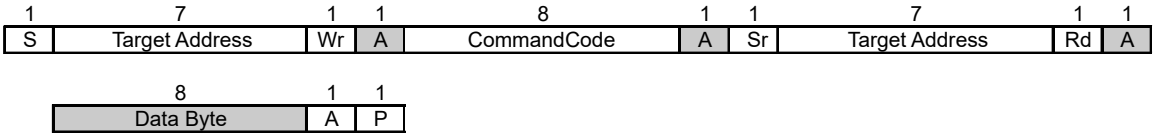

図 8-5. Byte Read Protocol

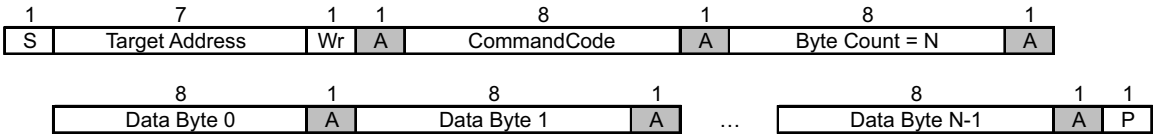

A. Data byte 0 bits [7:0] is reserved for Revision Code and Vendor Identification. Also, Data byte 0 is used for internal test purpose and must not be overwritten.

図 8-6. Block Write Protocol

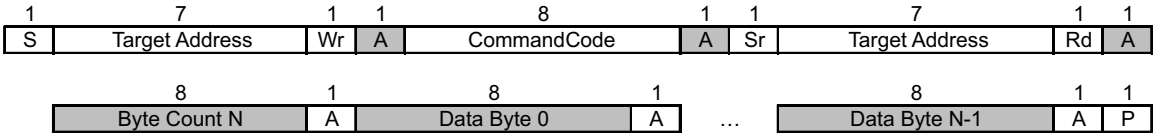

図 8-7. Block Read Protocol

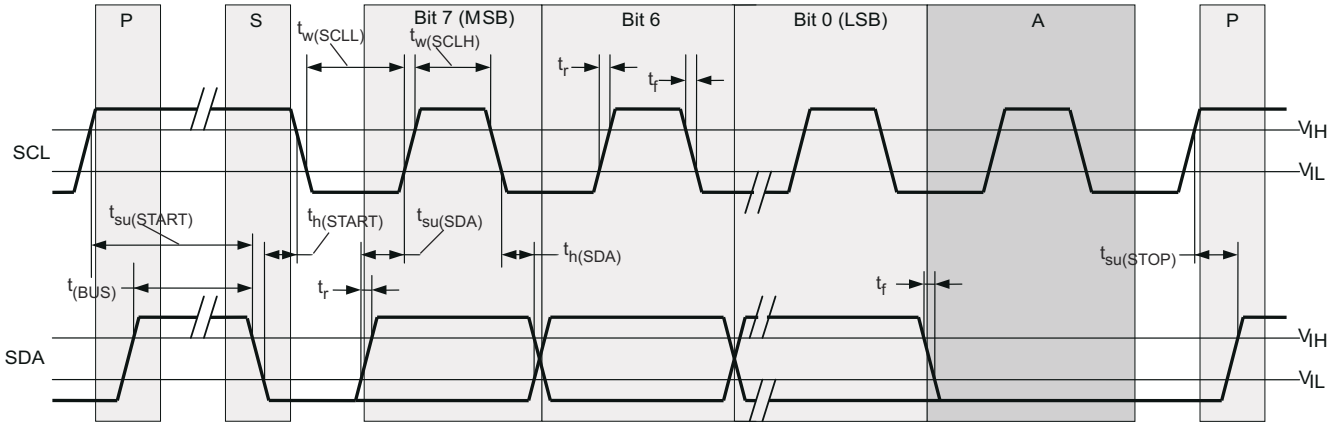

図 8-8. Timing Diagram for I²C Serial Control Interface

Copyright © 2024 Texas Instruments Incorporated

9 Application and Implementation

注

以下のアプリケーション情報は、TI の製品仕様に含まれるものではなく、TI ではその正確性または完全性を保証いたしません。個々の目的に対する製品の適合性については、お客様の責任で判断していただくことになります。お客様は自身の設計実装を検証しテストすることで、システムの機能を確認する必要があります。

9.1 Application Information

The CDCE913-Q1 device is an easy-to-use, high-performance, programmable CMOS clock synthesizer which can be used as a crystal buffer or clock synthesizer with a separate output supply pin. The CDCE913-Q1 device features an on-chip loop filter and spread-spectrum modulation. Programming can be done through the I^2C interface, or previously saved settings can be loaded from on-chip EEPROM. The pins S0, S1, and S2 can be programmed as control pins to select various output settings. This section shows some examples of the CDCE913-Q1 in various applications.

9.2 Typical Application

図 9-1 shows the use of the CDCEL913-Q1 device in an infotainment system, such as in head unit or telematics applications, using a 1.8-V single supply.

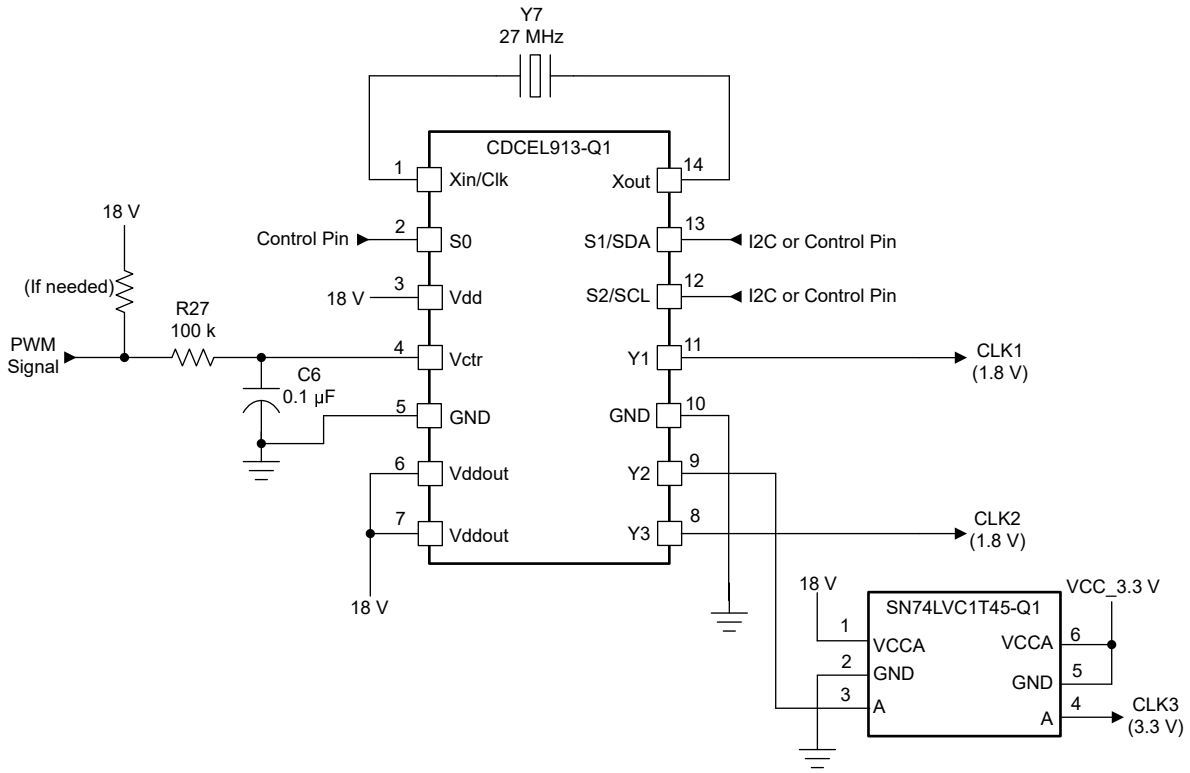

図 9-1. Single-Chip Solution Using a CDCE913-Q1 Device for Generating Clocking Frequencies for Infotainment Application

9.2.1 Design Requirements

The CDCE913-Q1 device supports spread-spectrum clocking (SSC) with multiple control parameters:

- Modulation amount (%)
- Modulation frequency (>20 kHz)
- Modulation shape (triangular, hershey, and others)

- Center spread or down spread (± or –)

Consider the following sample design requirements:

- EMI ≤ 55 dBmV
- CLK1 frequency = 27 MHz
- CLK2 frequency = 54 MHz
- CLK3 frequency = 108 MHz

For sample calculations of PLL constants, see *PLL Frequency Planning*.

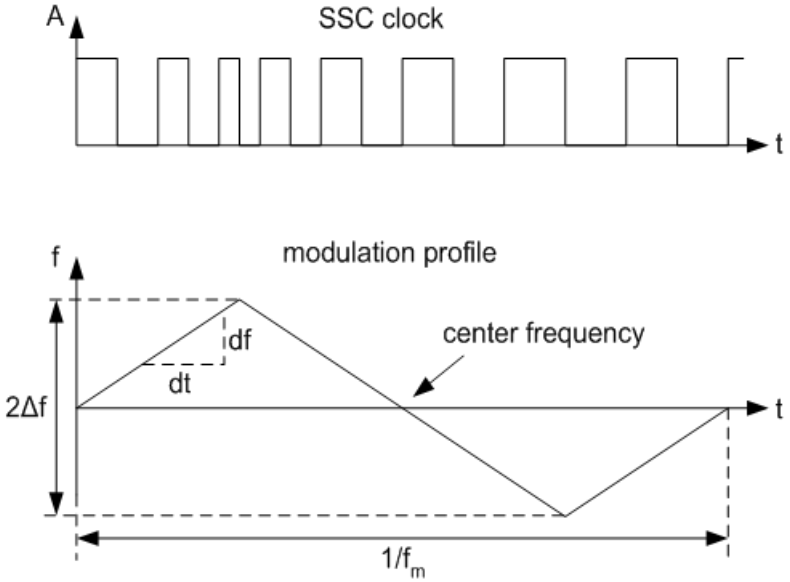

図 9-2. Modulation Frequency (fm) and Modulation Amount

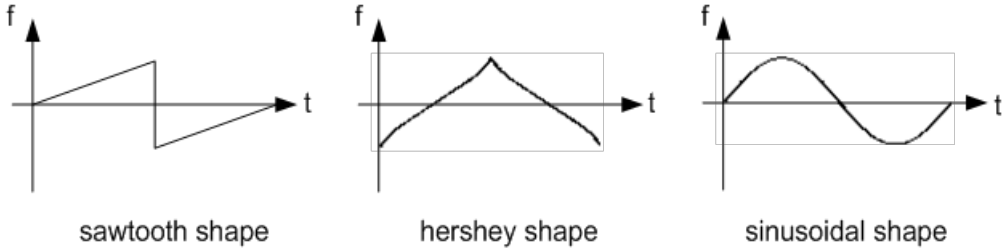

図 9-3. Spread Spectrum Modulation Shapes

9.2.2 Detailed Design Procedure

9.2.2.1 Spread-Spectrum Clock (SSC)

Spread-spectrum modulation is a method to spread emitted energy over a larger bandwidth. In clocking, spread spectrum can reduce electromagnetic interference (EMI) by reducing the level of emission from the clock distribution network.

Copyright © 2024 Texas Instruments Incorporated

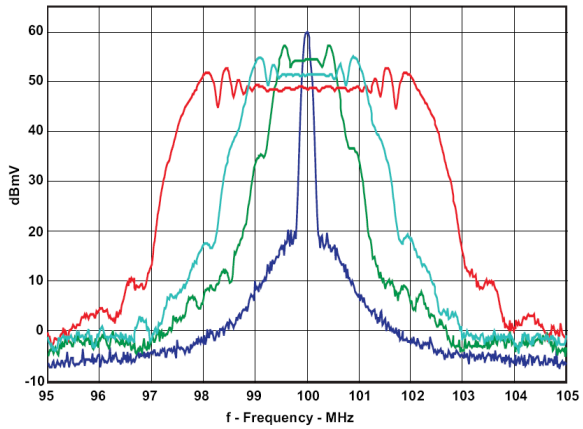

CDCS502 with a 25-MHz crystal, FS = 1, f_{OUT} = 100 MHz, and 0%, ±0.5, ±1%, and ±2% SSC

図 9-4. Comparison Between Typical Clock Power Spectrum and Spread-Spectrum Clock

Spread-spectrum clocking can be used to help reduce EMI to meet design specifications. For example, a specified EMI threshold of 55 dB/mV would require ±1% spread-spectrum clocking to meet this requirement.

9.2.2.2 PLL Frequency Planning

At a given input frequency (f_{IN}), use 式 1 to calculate the output frequency (f_{OUT}) of the CDCE913-Q1 or CDCEL913-Q1 device.

$$f_{OUT} = \frac{f_{IN}}{Pdiv} \times \frac{N}{M} \tag{1}$$

where

- M (1 to 511) and N (1 to 4095) are the multiplier or divider values of the PLL
- Pdiv (1 to 127) is the output divider

Use 式 2 to calculate the target VCO frequency (f_{VCO}) of each PLL.

$$f_{VCO} = f_{IN} \times \frac{N}{M} \tag{2}$$

The PLL internally operates as fractional divider and requires the following multiplier or divider settings:

- N
- P = 4 – int($\log_2$N / M); if P < 0 then P = 0
- Q = int(N' / M)
- R = N′ – M × Q

where

- int(X) = integer portion of X
- N′ = N × 2^P
- N ≥ M

80 MHz ≤ f_{VCO} ≤ 230 MHz

16 ≤ Q ≤ 63 µs

0 ≤ P ≤ 4 µs

0 ≤ R ≤ 51 µs

Example:

for f_{IN} = 27 MHz; M = 1; N = 4; Pdiv = 2

→ f_{OUT} = 54 MHz

→ f_{VCO} = 108 MHz

→ P = 4 – int($\log_2$4) = 4 – 2 = 2

→ N' = 4 × 2^2 = 16

→ Q = int(16) = 16

→ R = 16 – 16 = 0

for f_{IN} = 27 MHz; M = 2; N = 11; Pdiv = 2

→ f_{OUT} = 74.25 MHz

→ f_{VCO} = 148.50 MHz

→ P = 4 – int($\log_2$5.5) = 4 – 2 = 2

→ N' = 11 × 2^2 = 44

→ Q = int(22) = 22

→ R = 44 – 44 = 0

The values for P, Q, R, and N' are automatically calculated when using TI Pro-Clock™ software.

The frequency of CLK1 shown in the application diagram can be obtained by passing the input frequency of the VCXO directly to output 1. The CLK2 frequency can be achieved by using the PLL constants derived in the first example. The value of CLK3 requires the same PLL constants as CLK2, but Pdiv3 is set to 1 instead of 2 to yield a frequency of 108 MHz.

9.2.2.3 Crystal Oscillator Start-Up

When the CDCE913-Q1 or CDCEL913-Q1 device is used as a crystal buffer, crystal oscillator start-up dominates the start-up time compared to the internal PLL lock time. 図 9-5 shows the oscillator start-up sequence for a 27-MHz crystal input with an 8-pF load. The start-up time for the crystal is on the order of approximately 250 µs, compared to approximately 10 µs of lock time. In general, lock time is an order of magnitude less than the crystal start-up time.

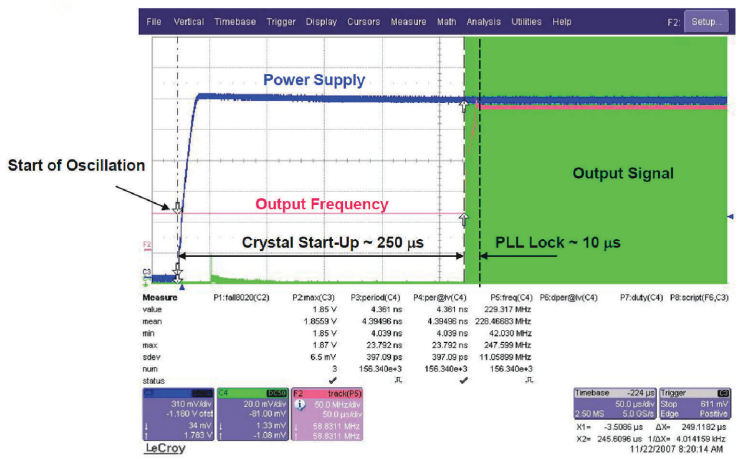

図 9-5. Crystal Oscillator Start-Up vs. PLL Lock Time

9.2.2.4 Frequency Adjustment With Crystal Oscillator Pulling

The frequency for the CDCE913-Q1 or CDCEL913-Q1 device is adjusted for media and other applications with the VCXO control input V_{ctr}. If a PWM-modulated signal is used as a control signal for the VCXO, an external filter is needed.

Copyright © 2024 Texas Instruments Incorporated

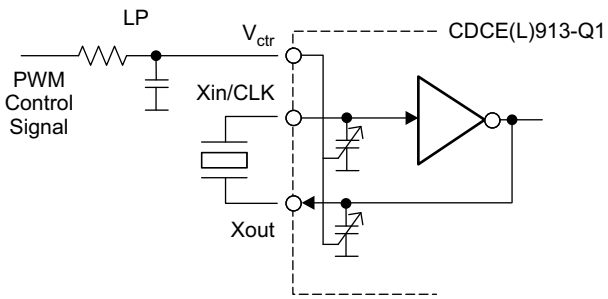

図 9-6. Frequency Adjustment Using PWM Input to the VCXO Control

9.2.2.5 Unused Inputs and Outputs

If VCXO-pulling functionality is not required, V_{ctr} should be left floating. All other unused inputs should be set to GND. Unused outputs should be left floating.

If one output block is not used, TI recommends disabling it. However, TI recommends providing a supply for all output blocks, even if they are disabled.

9.2.2.6 Switching Between XO and VCXO Mode

When the CDCE(L)913-Q1 device is in the crystal-oscillator or VCXO configuration, the internal capacitors require different internal capacitance. The following steps are recommended to switch to VCXO mode when the configuration for the on-chip capacitor is still set for XO mode. To center the output frequency to 0 ppm:

1. While in XO mode, put $V_{ctr} = V_{DD} / 2$
2. Switch from XO mode to VCXO mode
3. Program the internal capacitors in order to obtain 0 ppm at the output.

9.2.3 Application Curves

図 9-7, 図 9-8, 図 9-9, and 図 9-10 show CDCE913-Q1 measurements with the SSC feature enabled. Device configuration: 27-MHz input, 27-MHz output.

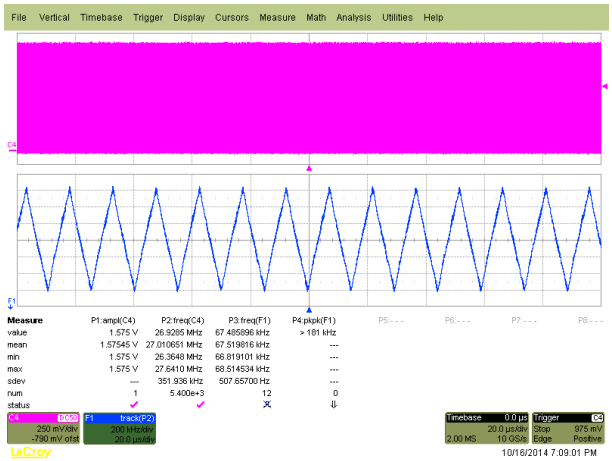

図 9-7. f_{OUT} = 27 MHz, VCO Frequency < 125 MHz, SSC (2% Center)

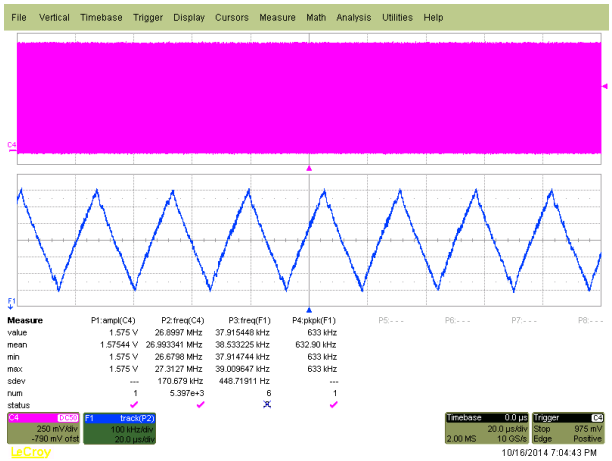

図 9-8. f_{OUT} = 27 MHz, VCO Frequency > 175 MHz, SSC (1%, Center)

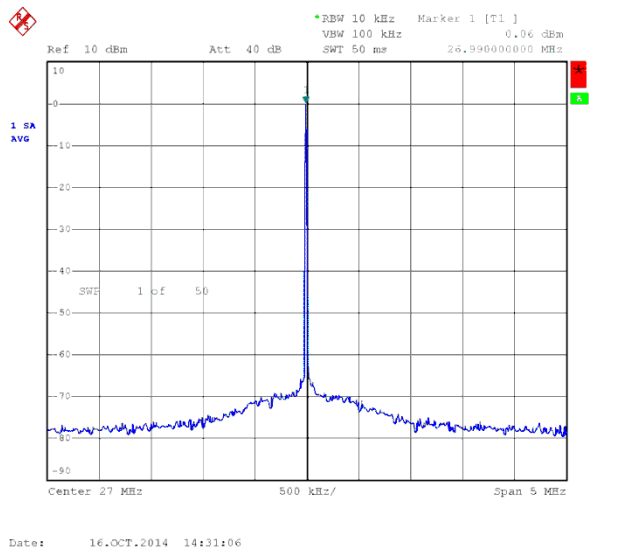

図 9-9. Output Spectrum With SSC Off

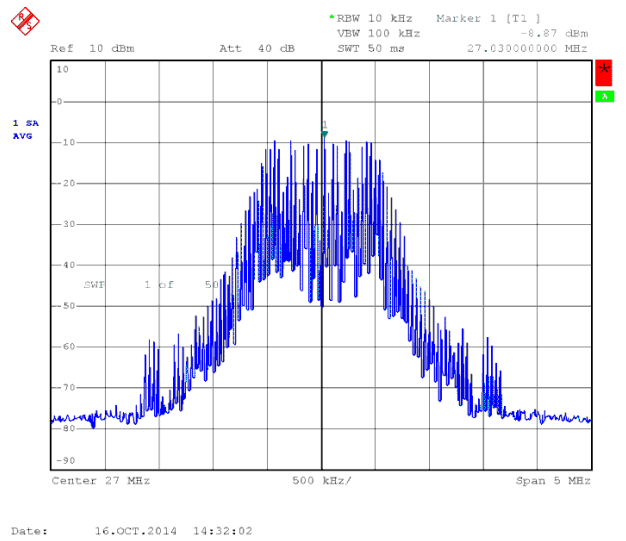

図 9-10. Output Spectrum With SSC On, 2% Center

9.3 Power Supply Recommendations

There is no restriction on the power-up sequence. If V_{DDOUT} is applied first, TI recommends grounding V_{DD} –. If V_{DDOUT} is powered while V_{DD} is floating, there is a risk of high current flowing on the V_{DDOUT} pins.

The device has a power-up control that is connected to the 1.8-V supply. This keeps the whole device disabled until the 1.8-V supply reaches a sufficient voltage level. Then, the device switches on all internal components, including the outputs. If a 3.3-V V_{DDOUT} is available before the 1.8-V, the outputs stay disabled until the 1.8-V supply has reached a certain level.

9.4 Layout

9.4.1 Layout Guidelines

When the CDCE913-Q1 device is used as a crystal buffer, any parasitics across the crystal affect the pulling range of the VCXO. Thus, place the crystal units on the board. Crystals should be placed as close to the device as possible, ensuring that the routing lines from the crystal terminals to Xin and Xout have the same length.

If possible, cut out both ground plane and power plane under the area where the crystal and the routing to the device are placed. In this area, always avoid routing any other signal line, as it could be a source of noise coupling.

Additional discrete capacitors can be required to meet the load capacitance specification of certain crystals. For example, a 10.7-pF load capacitor is not fully programmable on the chip, because the internal capacitor can range from 0 pF to 20 pF with steps of 1 pF. Therefore, the 0.7-pF capacitor can be discretely added on top of an internal 10 pF.

To minimize the inductive influence of the trace, TI recommends placing this small capacitor as close to the device as possible, and symmetrically with respect to Xin and Xout.

図 9-11 shows a conceptual layout detailing recommended placement of power-supply bypass capacitors. For component-side mounting, use 0402 body-size capacitors to facilitate signal routing. Keep the connections between the bypass capacitors and the power supply on the device as short as possible. Ground the other side of the capacitor using a low-impedance connection to the ground plane.

Copyright © 2024 Texas Instruments Incorporated

9.4.2 Layout Example

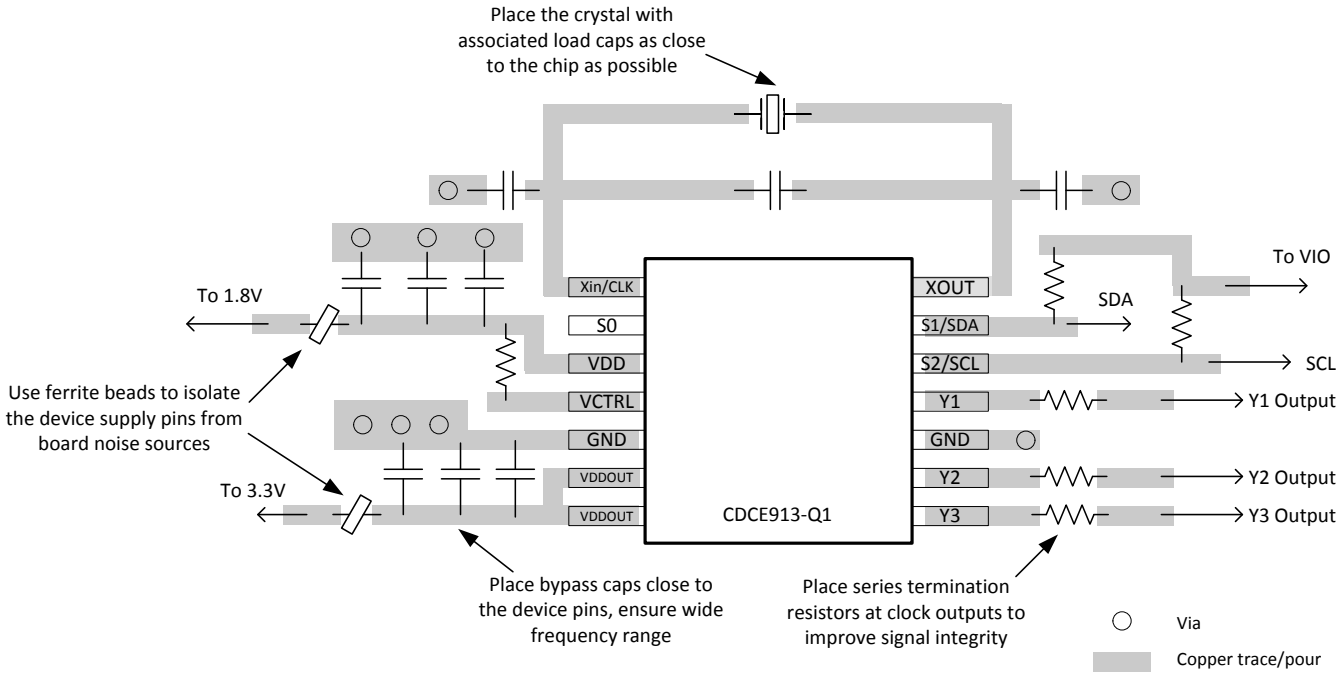

図 9-11. Annotated Layout

10 Register Maps

10.1 I²C Configuration Registers

The clock input, control pins, PLLs, and output stages are user-configurable. The following tables and explanations describe the programmable functions of the CDCE913-Q1 and CDCEL913-Q1 devices. All settings can be manually written into the device through the I²C bus, or programmed by using the TI Pro-Clock™ software. TI Pro-Clock™ software allows the user to make all settings quickly, and automatically calculates the values for optimized performance at lowest jitter.

表 10-1. I²C Registers

ADDRESS OFFSET	REGISTER DESCRIPTION	TABLE
00h	Generic configuration register	表 10-3
10h	PLL1 configuration register	表 10-4

The grey-highlighted bits, described in the configuration register tables in the following pages, belong to the control terminal register. The user can predefine up to eight different control settings. These settings then can be selected by the external control pins, S0, S1, and S2. See the *Control Terminal Configuration* section.

Copyright © 2024 Texas Instruments Incorporated

表 10-2. Configuration Register, External Control Terminals

				Y1	PLL1 Settings		
	EXTERNAL CONTROL PINS			OUTPUT SELECTION	FREQUENCY SELECTION	SSC SELECTION	OUTPUT SELECTION
	S2	S1	S0	Y1	FS1	SSC1	Y2Y3
0	0	0	0	Y1_0	FS1_0	SSC1_0	Y2Y3_0
1	0	0	1	Y1_1	FS1_1	SSC1_1	Y2Y3_1
2	0	1	0	Y1_2	FS1_2	SSC1_2	Y2Y3_2
3	0	1	1	Y1_3	FS1_3	SSC1_3	Y2Y3_3
4	1	0	0	Y1_4	FS1_4	SSC1_4	Y2Y3_4
5	1	0	1	Y1_5	FS1_5	SSC1_5	Y2Y3_5
6	1	1	0	Y1_6	FS1_6	SSC1_6	Y2Y3_6
7	1	1	1	Y1_7	FS1_7	SSC1_7	Y2Y3_7
	Address offset(1)			04h	13h	10h–12h	15h

(1) Address offset refers to the byte address in the configuration register in 表 10-3 and 表 10-4.

表 10-3. Generic Configuration Register

OFFSET(1)	BIT(2)	ACRONYM	DEFAULT(3)	DESCRIPTION
00h	7	E_EL	Xb	Device identification (read-only): 1 is CDCE913-Q1 (3.3 V out), 0 is CDCEL913-Q1 (1.8 V out)
	6:4	RID	Xb	Revision identification number (read-only)
	3:0	VID	1h	Vendor identification number (read-only)
01h	7	—	0b	Reserved – always write 0
	6	EEPIP	0b	EEPROM programming Status:(4) (read-only) 0 – EEPROM programming is completed. 1 – EEPROM is in programming mode.
	5	EELOCK	0b	Permanently lock EEPROM data(5) 0 – EEPROM is not locked. 1 – EEPROM is permanently locked.
	4	PWDN	0b	Device power down (overwrites S0, S1, and S2 settings; configuration register settings are unchanged) Note: PWDN cannot be set to 1 in the EEPROM. 0 – Device active (PLL1 and all outputs are enabled) 1 – Device power down (PLL1 in power down and all outputs in Hi-Z state)
	3:2	INCLK	00b	Input clock selection: 00 – Xtal 10 – LVCMOS 01 – VCXO 11 – Reserved
	1:0	TARGET_ADR	01b	Address bits A0 and A1 of the target receiver address
02h	7	M1	1b	Clock source selection for output Y1: 0 – Input clock 1 – PLL1 clock
	6	SPICON	0b	Operation mode selection for pins 12 and 13(6) 0 – Serial programming interface SDA (pin 13) and SCL (pin 12) 1 – Control pins S1 (pin 13) and S2 (pin 12)
	5:4	Y1_ST1	11b	Y1-State0/1 definition 00 – Device power down (all PLLs in power down and all outputs in Hi-Z state) 01 – Y1 disabled to Hi-Z state 10 – Y1 disabled to low 11 – Y1 enabled
	3:2	Y1_ST0	01b	
	1:0	Pdiv1 [9:8]	001h	10-bit Y1-output-divider Pdiv1: 0 – Divider reset and stand-by 1 to 1023 – Divider value
03h	7:0	Pdiv1 [7:0]		
04h	7	Y1_7	0b	Y1_x State selection(7) 0 – State0 (predefined by Y1_ST0) 1 – State1 (predefined by Y1_ST1)
	6	Y1_6	0b	
	5	Y1_5	0b	
	4	Y1_4	0b	
	3	Y1_3	0b	
	2	Y1_2	0b	
	1	Y1_1	1b	
	0	Y1_0	0b	
05h	7:3	XCSEL	0Ah	Crystal load capacitor selection(8) 00h – 0 pF 01h – 1 pF 02h – 2 pF :14h to 1Fh – 20 pF
	2:0		0b	Reserved – do not write other than 0

表 10-3. Generic Configuration Register (続き)

OFFSET[1]	BIT[2]	ACRONYM	DEFAULT[3]	DESCRIPTION
06h	7:1	BCOUNT	20h	7-bit byte count (defines the number of bytes which will be sent from this device at the next *Block Read* transfer); all bytes must be read out to finish the read cycle correctly.
	0	EEWRITE	0b	Initiate EEPROM write cycle [4] [9] 0– No EEPROM write cycle 1 – Start EEPROM write cycle (internal registers are saved to the EEPROM)
07h-0Fh		—	0h	Unused address range

(1) Writing data beyond 20h may affect device function.
(2) All data is transferred with the MSB first.
(3) Unless customer-specific setting
(4) During EEPROM programming, no data is allowed to be sent to the device through the I^2C bus until the programming sequence is completed. However, data can be read out during the programming sequence (*Byte Read* or *Block Read*).
(5) If this bit is set to high in the EEPROM, the actual data in the EEPROM is permanently locked. No further programming is possible. However, data can still be written through the I^2C bus to the internal register to change device function quickly, but new data can no longer be saved to the EEPROM. EELOCK is effective only if written into the EEPROM.
(6) Selection of *control pins* is effective only if written into the EEPROM. When written into the EEPROM, the serial programming pins are no longer available. However, if V_{DDOUT} is forced to GND, the two control pins, S1 and S2, temporarily act as serial programming pins (SDA-SCL), and the two target receiver address bits are reset to A0 = 0 and A1 = 0.
(7) These are the bits of the control terminal register (see 表 10-2). The user can predefine up to eight different control settings. These settings then can be selected by the external control pins, S0, S1, and S2.
(8) The internal load capacitor (C1, C2) must be used to achieve the best clock performance. External capacitors should be used only to finely adjust C_L by a few picofarads. The value of C_L can be programmed with a resolution of 1 pF for a crystal load range of 0 pF to 20 pF. For C_L > 20 pF, use additional external capacitors. The device input capacitance value must be considered, which always adds 1.5 pF (6 pF//2 pF) to the selected C_L. For more about VCXO config. and crystal recommendation, see *VCXO Application Guideline for CDCE(L)9xx Family* (SCAA085).
(9) The EEPROM WRITE bit must be sent last. This ensures that the content of all internal registers are stored in the EEPROM. The EEWRITE cycle is initiated with the rising edge of the EEWRITE bit. A static level-high does not trigger an EEPROM WRITE cycle. The EEWRITE bit must be reset to low after the programming is completed. The programming status can be monitored by reading out EEPIP. If EELOCK is set to high, no EEPROM programming is possible.

表 10-4. PLL1 Configuration Register

OFFSET[1]	BIT[2]	ACRONYM	DEFAULT[3]	DESCRIPTION
10h	7:5	SSC1_7 [2:0]	000b	SSC1: PLL1 SSC selection (modulation amount). [4] **Down** / **Center** 000 (off) / 000 (off) 001 – 0.25% / 001 ± 0.25% 010 – 0.5% / 010 ± 0.5% 011 – 0.75% / 011 ± 0.75% 100 – 1.0% / 100 ± 1.0% 101 – 1.25% / 101 ± 1.25% 110 – 1.5% / 110 ± 1.5% 111 – 2.0% / 111 ± 2.0%
	4:2	SSC1_6 [2:0]	000b	
	1:0	SSC1_5 [2:1]	000b	
11h	7	SSC1_5 [0]		
	6:4	SSC1_4 [2:0]	000b	
	3:1	SSC1_3 [2:0]	000b	
	0	SSC1_2 [2]	000b	
12h	7:6	SSC1_2 [1:0]		
	5:3	SSC1_1 [2:0]	000b	
	2:0	SSC1_0 [2:0]	000b	
13h	7	FS1_7	0b	FS1_x: PLL1 frequency selection[4] 0 – f_{VCO1_0} (predefined by PLL1_0 – multiplier/divider value) 1 – f_{VCO1_1} (predefined by PLL1_1 – multiplier/divider value)
	6	FS1_6	0b	
	5	FS1_5	0b	
	4	FS1_4	0b	
	3	FS1_3	0b	
	2	FS1_2	0b	
	1	FS1_1	0b	
	0	FS1_0	0b	

Copyright © 2024 Texas Instruments Incorporated

表 10-4. PLL1 Configuration Register (続き)

OFFSET[1]	BIT[2]	ACRONYM	DEFAULT[3]	DESCRIPTION	
14h	7	MUX1	1b	PLL1 multiplexer:	0 – PLL1 1 – PLL1 bypass (PLL1 is in power down)
	6	M2	1b	Output Y2 multiplexer:	0 – Pdiv1 1 – Pdiv2
	5:4	M3	10b	Output Y3 Multiplexer:	00 – Pdiv1-divider 01 – Pdiv2-divider 10 – Pdiv3-divider 11 – Reserved
	3:2	Y2Y3_ST1	11b	Y2, Y3-State0/1definition:	00 – Y2 and Y3 disabled to Hi-Z state (PLL1 is in power down) 01 – Y2 and Y3 disabled to Hi-Z state 10–Y2 and Y3 disabled to low 11 – Y2 and Y3 enabled
	1:0	Y2Y3_ST0	01b		
15h	7	Y2Y3_7	0b	Y2Y3_x output state selection. [4] 0 – State0 (predefined by Y2Y3_ST0) 1 – State1 (predefined by Y2Y3_ST1)	
	6	Y2Y3_6	0b		
	5	Y2Y3_5	0b		
	4	Y2Y3_4	0b		
	3	Y2Y3_3	0b		
	2	Y2Y3_2	0b		
	1	Y2Y3_1	1b		
	0	Y2Y3_0	0b		
16h	7	SSC1DC	0b	PLL1 SSC down or center selection:	0 – Down 1 – Center
	6:0	Pdiv2	01h	7-bit Y2-output-divider Pdiv2:	0 – Reset and standby 1 to 127 – Divider value
17h	7	—	0b	Reserved – do not write other than 0	
	6:0	Pdiv3	01h	7-bit Y3-output-divider Pdiv3:	0 – Reset and standby 1 to 127 – Divider value
18h	7:0	PLL1_0N [11:4]	004h	PLL1_0[5]: 30-bit multiplier or divider value for frequency f_{VCO1_0} (for more information, see *PLL Frequency Planning*).	
19h	7:4	PLL1_0N [3:0]			
	3:0	PLL1_0R [8:5]	000h		
1Ah	7:3	PLL1_0R[4:0]			
	2:0	PLL1_0Q [5:3]	10h		
1Bh	7:5	PLL1_0Q [2:0]			
	4:2	PLL1_0P [2:0]	010b		
	1:0	VCO1_0_RANGE	00b	f_{VCO1_0} range selection:	00 – f_{VCO1_0} < 125 MHz 01 – 125 MHz ≤ f_{VCO1_0} < 150 MHz 10 – 150 MHz ≤ f_{VCO1_0} < 175 MHz 11 – f_{VCO1_0} ≥ 175 MHz
1Ch	7:0	PLL1_1N [11:4]	004h	PLL1_1[5]: 30-bit multiplier or divider value for frequency f_{VCO1_1} (for more information, see *PLL Frequency Planning*).	
1Dh	7:4	PLL1_1N [3:0]			
	3:0	PLL1_1R [8:5]	000h		
1Eh	7:3	PLL1_1R[4:0]			
	2:0	PLL1_1Q [5:3]	10h		
1Fh	7:5	PLL1_1Q [2:0]			
	4:2	PLL1_1P [2:0]	010b		
	1:0	VCO1_1_RANGE	00b	f_{VCO1_1} range selection:	00 – f_{VCO1_1} < 125 MHz 01 – 125 MHz ≤ f_{VCO1_1} < 150 MHz 10 – 150 MHz ≤ f_{VCO1_1} < 175 MHz 11 – f_{VCO1_1} ≥ 175 MHz

(1) Writing data beyond 20h may adversely affect device function.
(2) All data is transferred MSB-first.
(3) Unless a custom setting is used
(4) The user can predefine up to eight different control settings. In normal device operation, these settings can be selected by the external control pins, S0, S1, and S2.
(5) PLL settings limits: 16 ≤ q ≤ 63, 0 ≤ p ≤ 7, 0 ≤ r ≤ 511, 0 < N < 4096

11 デバイスおよびドキュメントのサポート

11.1 ドキュメントのサポート

11.1.1 関連資料

関連資料については、以下を参照してください。

- 『水晶振動子または水晶発振器のシリコン デバイスによる代替 』(SNAA217)
- 『CDCE(L)9xx および CDCEx06 プログラミング評価基板 』(SCAU026)
- 『CDCE(L)9xx 性能評価基板 』(SCAU022)
- CDCE(L)9xx ファミリ用の一般的な I²2C/EEPROM 使用法 (SCAA104)
- 『低周波数ワード クロックからのオーディオ データ コンバータ用低位相ノイズ クロックの生成 』(SCAA088)
- 『CDCE(L)9xx ファミリ用の水晶振動子選択に関する実践的な考慮事項 』(SLEA071)
- CDCE(L)949、CDCE(L)937、CDCE(L)925、CDCE(L)913 への I²C の使用 (SCAA105)
- 『CDCE(L)9xx ファミリの VCXO アプリケーション ガイドライン 』(SCAA085)

11.2 ドキュメントの更新通知を受け取る方法

ドキュメントの更新についての通知を受け取るには、www.tij.co.jp のデバイス製品フォルダを開いてください。[通知] をクリックして登録すると、変更されたすべての製品情報に関するダイジェストを毎週受け取ることができます。 変更の詳細については、改訂されたドキュメントに含まれている改訂履歴をご覧ください。

11.3 サポート・リソース

テキサス・インスツルメンツ E2E™ サポート・フォーラムは、エンジニアが検証済みの回答と設計に関するヒントをエキスパートから迅速かつ直接得ることができる場所です。既存の回答を検索したり、独自の質問をしたりすることで、設計で必要な支援を迅速に得ることができます。

リンクされているコンテンツは、各寄稿者により「現状のまま」提供されるものです。これらはテキサス・インスツルメンツの仕様を構成するものではなく、必ずしもテキサス・インスツルメンツの見解を反映したものではありません。テキサス・インスツルメンツの使用条件を参照してください。

11.4 商標

DaVinci™, OMAP™, Pro-Clock™, and テキサス・インスツルメンツ E2E™ are trademarks of Texas Instruments.
Bluetooth® is a registered trademark of Bluetooth SIG, Inc.
すべての商標は、それぞれの所有者に帰属します。

11.5 静電気放電に関する注意事項

この IC は、ESD によって破損する可能性があります。テキサス・インスツルメンツは、IC を取り扱う際には常に適切な注意を払うことを推奨します。正しい取り扱いおよび設置手順に従わない場合、デバイスを破損するおそれがあります。

ESD による破損は、わずかな性能低下からデバイスの完全な故障まで多岐にわたります。精密な IC の場合、パラメータがわずかに変化するだけで公表されている仕様から外れる可能性があるため、破損が発生しやすくなっています。

11.6 用語集

テキサス・インスツルメンツ用語集　　この用語集には、用語や略語の一覧および定義が記載されています。

Copyright © 2024 Texas Instruments Incorporated

12 Revision History

資料番号末尾の英字は改訂を表しています。その改訂履歴は英語版に準じています。

Changes from Revision C (November 2016) to Revision D (February 2024) **Page**

- ドキュメント全体にわたって表、図、相互参照の採番方法を更新 1
- CDCE913-Q1 の機能安全情報を追加 1
- I^2C に言及している場合、すべての旧式の用語をコントローラおよびターゲットに変更 1
- 「製品情報」表を「パッケージ情報」に変更 1
- Removed the thermal pad from the TSSOP pinout 4
- Added Y1 to Y3 cycle-to-cycle jitter and Peak-to-peak period jitter specs with tablenotes explaining the configuration differences 6
- Deleted sentence - A different default setting can be programmed upon customer request. Contact Texas Instruments sales or marketing representative for more information 13
- Changed units from kbit/s to kbps 14
- Added information on allowable data inputs during the EEPROM write cycle in *Data Protocol* 14

Changes from Revision B (September 2016) to Revision C (November 2016) **Page**

- CDCEL913-Q1 デバイスのさまざまな温度範囲を明確化。 1
- Deleted old table notes from the *Thermal Information* table. 6

Changes from Revision A (June 2013) to Revision B (September 2016) **Page**

- 「機能説明」セクション、「デバイスの機能モード」セクション、「アプリケーションと実装」セクション、「電源に関する推奨事項」セクション、「レイアウト」セクション、「デバイスおよびドキュメントのサポート」セクション、「メカニカル、パッケージ、および注文情報」セクションを追加。 1
- Changed ESD Ratings: Human-body model (HBM) from 2500 V to 2000 V and Charged-device model (CDM) from 500 V to 1000 V 5
- Changed second S to Sr in *Byte Read Protocol* 15

Changes from Revision * (June 2013) to Revision A (June 2013) **Page**

- CDM ESD 分類レベルを変更。 1
- Added ESD ratings 5
- Changed I_{DDPD} typical From: 20 To: 30 6
- Changed I_I LVCMOS input current value from typical to maximum 6
- Changed I_{IH} LVCMOS input current for S0, S1, and S2 value from typical to maximum 6
- Changed I_{IL} LVCMOS input current for S0, S1, and S2 value from typical to maximum 6
- Changed *Test Load for 50-Ω Board Environment* 10
- Changed Output Selection From: (Y2, Y9) To: (Y2, Y3) 12
- Changed text note for *Block Write Protocol* 15
- Changed 01h, Bit 7 From: For internal use – always write 1 To: Reserved – always write 0 24
- Changed 06h, 7:1 From: 30h To: 20h 24

13 Mechanical, Packaging, and Orderable Information

The following pages include mechanical, packaging, and orderable information. This information is the most current data available for the designated devices. This data is subject to change without notice and revision of this document. For browser-based versions of this data sheet, refer to the left-hand navigation.

Copyright © 2024 Texas Instruments Incorporated

重要なお知らせと免責事項

テキサス・インスツルメンツは、技術データと信頼性データ (データシートを含みます)、設計リソース (リファレンス デザインを含みます)、アプリケーションや設計に関する各種アドバイス、Web ツール、安全性情報、その他のリソースを、欠陥が存在する可能性のある「現状のまま」提供しており、商品性および特定目的に対する適合性の黙示保証、第三者の知的財産権の非侵害保証を含むいかなる保証も、明示的または黙示的にかかわらず拒否します。

これらのリソースは、テキサス・インスツルメンツ製品を使用する設計の経験を積んだ開発者への提供を意図したものです。(1) お客様のアプリケーションに適した テキサス・インスツルメンツ製品の選定、(2) お客様のアプリケーションの設計、検証、試験、(3) お客様のアプリケーションに該当する各種規格や、その他のあらゆる安全性、セキュリティ、規制、または他の要件への確実な適合に関する責任を、お客様のみが単独で負うものとします。

上記の各種リソースは、予告なく変更される可能性があります。これらのリソースは、リソースで説明されている テキサス・インスツルメンツ製品を使用するアプリケーションの開発の目的でのみ、テキサス・インスツルメンツはその使用をお客様に許諾します。これらのリソースに関して、他の目的で複製することや掲載することは禁止されています。テキサス・インスツルメンツや第三者の知的財産権のライセンスが付与されている訳ではありません。お客様は、これらのリソースを自身で使用した結果発生するあらゆる申し立て、損害、費用、損失、責任について、テキサス・インスツルメンツおよびその代理人を完全に補償するものとし、テキサス・インスツルメンツは一切の責任を拒否します。

テキサス・インスツルメンツの製品は、テキサス・インスツルメンツの販売条件、または ti.com やかかる テキサス・インスツルメンツ製品の関連資料などのいずれかを通じて提供する適用可能な条項の下で提供されています。テキサス・インスツルメンツがこれらのリソースを提供することは、適用される テキサス・インスツルメンツの保証または他の保証の放棄の拡大や変更を意味するものではありません。

お客様がいかなる追加条項または代替条項を提案した場合でも、テキサス・インスツルメンツはそれらに異議を唱え、拒否します。

郵送先住所：Texas Instruments, Post Office Box 655303, Dallas, Texas 75265
Copyright © 2024, Texas Instruments Incorporated

PACKAGING INFORMATION

Orderable part number	Status (1)	Material type (2)	Package | Pins	Package qty | Carrier	RoHS (3)	Lead finish/ Ball material (4)	MSL rating/ Peak reflow (5)	Op temp (°C)	Part marking (6)
CDCE913QPWRQ1	Active	Production	TSSOP (PW) | 14	2000 | LARGE T&R	Yes	NIPDAU	Level-3-260C-168 HR	-40 to 125	CE913Q
CDCE913QPWRQ1.B	Active	Production	TSSOP (PW) | 14	2000 | LARGE T&R	Yes	NIPDAU	Level-3-260C-168 HR	-40 to 125	CE913Q
CDCEL913IPWRQ1	Active	Production	TSSOP (PW) | 14	2000 | LARGE T&R	Yes	NIPDAU	Level-1-260C-UNLIM	-40 to 85	CEL913Q
CDCEL913IPWRQ1.B	Active	Production	TSSOP (PW) | 14	2000 | LARGE T&R	Yes	NIPDAU	Level-1-260C-UNLIM	-40 to 85	CEL913Q

(1) **Status:** For more details on status, see our product life cycle.

(2) **Material type:** When designated, preproduction parts are prototypes/experimental devices, and are not yet approved or released for full production. Testing and final process, including without limitation quality assurance, reliability performance testing, and/or process qualification, may not yet be complete, and this item is subject to further changes or possible discontinuation. If available for ordering, purchases will be subject to an additional waiver at checkout, and are intended for early internal evaluation purposes only. These items are sold without warranties of any kind.

(3) **RoHS values:** Yes, No, RoHS Exempt. See the TI RoHS Statement for additional information and value definition.

(4) **Lead finish/Ball material:** Parts may have multiple material finish options. Finish options are separated by a vertical ruled line. Lead finish/Ball material values may wrap to two lines if the finish value exceeds the maximum column width.

(5) **MSL rating/Peak reflow:** The moisture sensitivity level ratings and peak solder (reflow) temperatures. In the event that a part has multiple moisture sensitivity ratings, only the lowest level per JEDEC standards is shown. Refer to the shipping label for the actual reflow temperature that will be used to mount the part to the printed circuit board.

(6) **Part marking:** There may be an additional marking, which relates to the logo, the lot trace code information, or the environmental category of the part.

Multiple part markings will be inside parentheses. Only one part marking contained in parentheses and separated by a "~" will appear on a part. If a line is indented then it is a continuation of the previous line and the two combined represent the entire part marking for that device.

Important Information and Disclaimer: The information provided on this page represents TI's knowledge and belief as of the date that it is provided. TI bases its knowledge and belief on information provided by third parties, and makes no representation or warranty as to the accuracy of such information. Efforts are underway to better integrate information from third parties. TI has taken and continues to take reasonable steps to provide representative and accurate information but may not have conducted destructive testing or chemical analysis on incoming materials and chemicals. TI and TI suppliers consider certain information to be proprietary, and thus CAS numbers and other limited information may not be available for release.

In no event shall TI's liability arising out of such information exceed the total purchase price of the TI part(s) at issue in this document sold by TI to Customer on an annual basis.

OTHER QUALIFIED VERSIONS OF CDCE913-Q1, CDCEL913-Q1 :

- Catalog : CDCE913, CDCEL913

NOTE: Qualified Version Definitions:

- Catalog - TI's standard catalog product

TAPE AND REEL INFORMATION

REEL DIMENSIONS

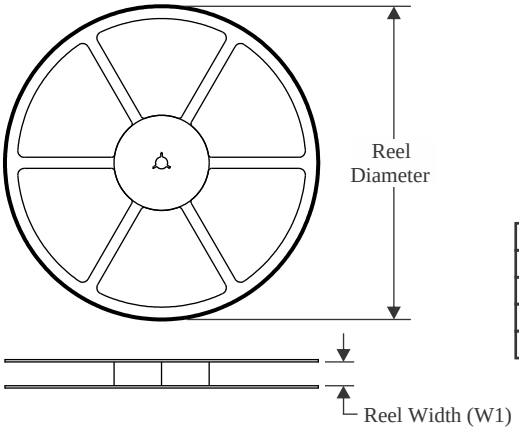

TAPE DIMENSIONS

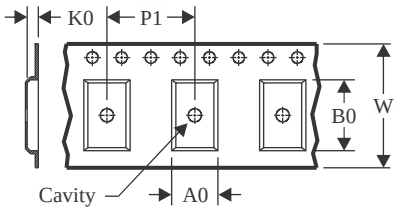

A0	Dimension designed to accommodate the component width
B0	Dimension designed to accommodate the component length
K0	Dimension designed to accommodate the component thickness
W	Overall width of the carrier tape
P1	Pitch between successive cavity centers

QUADRANT ASSIGNMENTS FOR PIN 1 ORIENTATION IN TAPE

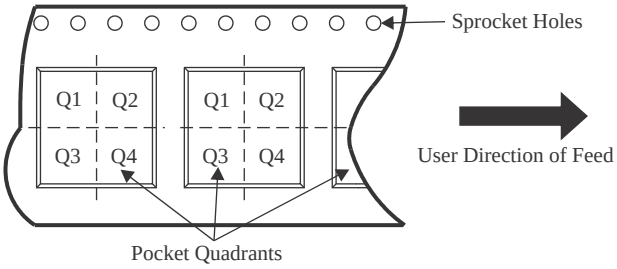

*All dimensions are nominal

Device	Package Type	Package Drawing	Pins	SPQ	Reel Diameter (mm)	Reel Width W1 (mm)	A0 (mm)	B0 (mm)	K0 (mm)	P1 (mm)	W (mm)	Pin1 Quadrant
CDCE913QPWRQ1	TSSOP	PW	14	2000	330.0	12.4	6.9	5.6	1.6	8.0	12.0	Q1
CDCEL913IPWRQ1	TSSOP	PW	14	2000	330.0	12.4	6.9	5.6	1.6	8.0	12.0	Q1

TAPE AND REEL BOX DIMENSIONS

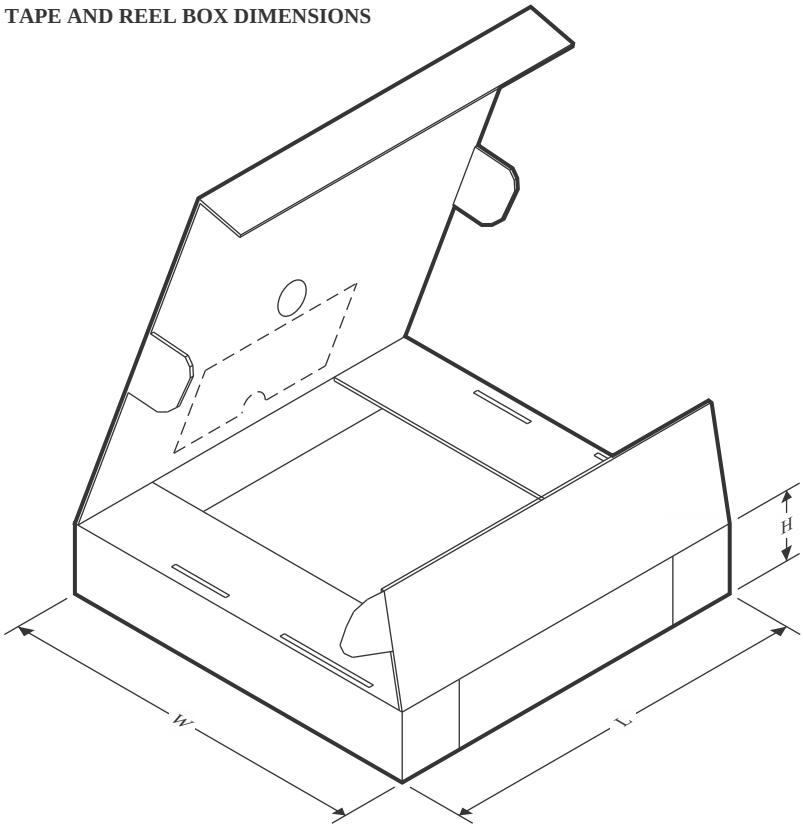

*All dimensions are nominal

Device	Package Type	Package Drawing	Pins	SPQ	Length (mm)	Width (mm)	Height (mm)
CDCE913QPWRQ1	TSSOP	PW	14	2000	353.0	353.0	32.0
CDCEL913IPWRQ1	TSSOP	PW	14	2000	353.0	353.0	32.0

PW0014A

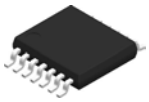

PACKAGE OUTLINE

TSSOP - 1.2 mm max height

SMALL OUTLINE PACKAGE

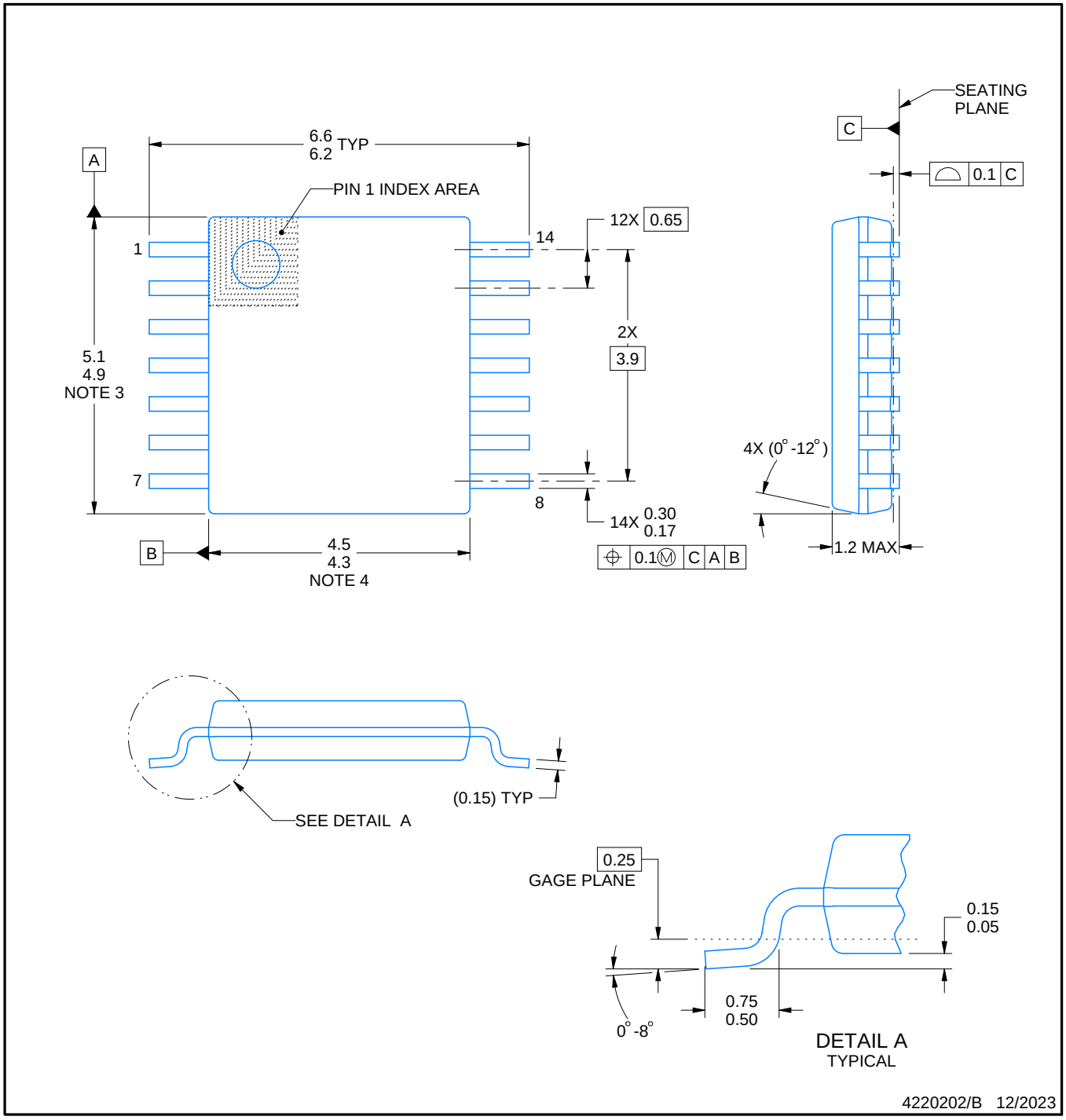

NOTES:

1. All linear dimensions are in millimeters. Any dimensions in parenthesis are for reference only. Dimensioning and tolerancing per ASME Y14.5M.
2. This drawing is subject to change without notice.
3. This dimension does not include mold flash, protrusions, or gate burrs. Mold flash, protrusions, or gate burrs shall not exceed 0.15 mm per side.
4. This dimension does not include interlead flash. Interlead flash shall not exceed 0.25 mm per side.
5. Reference JEDEC registration MO-153.

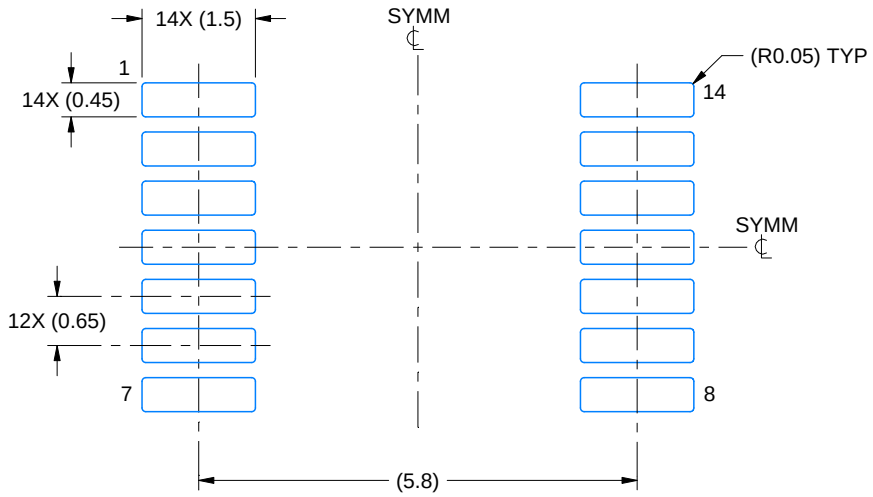

LAND PATTERN EXAMPLE
EXPOSED METAL SHOWN
SCALE: 10X

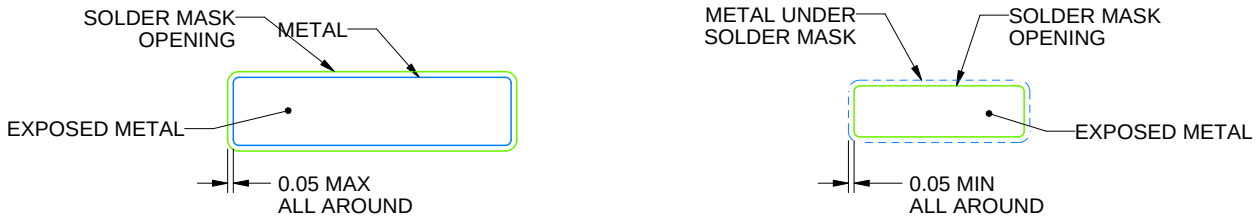

NON-SOLDER MASK DEFINED (PREFERRED)

SOLDER MASK DEFINED

SOLDER MASK DETAILS

4220202/B 12/2023

NOTES: (continued)

6. Publication IPC-7351 may have alternate designs.
7. Solder mask tolerances between and around signal pads can vary based on board fabrication site.

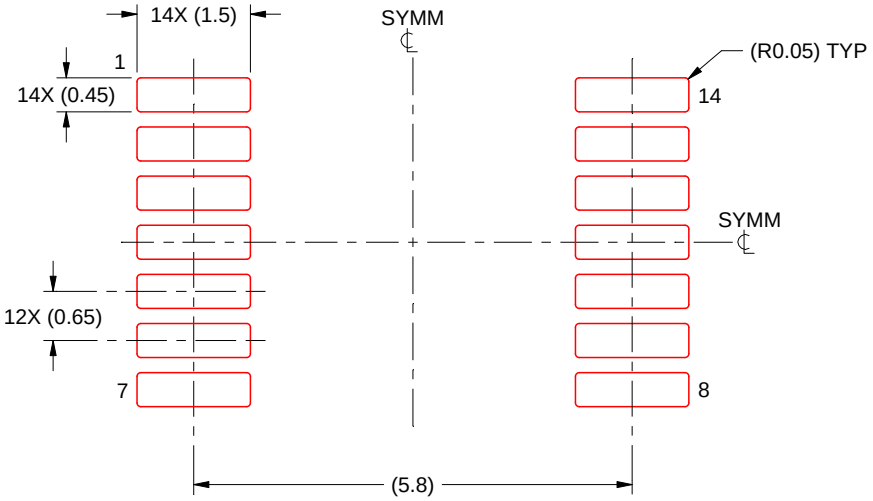

SOLDER PASTE EXAMPLE
BASED ON 0.125 mm THICK STENCIL
SCALE: 10X

4220202/B 12/2023

NOTES: (continued)

8. Laser cutting apertures with trapezoidal walls and rounded corners may offer better paste release. IPC-7525 may have alternate design recommendations.
9. Board assembly site may have different recommendations for stencil design.

重要なお知らせと免責事項

TI は、技術データと信頼性データ (データシートを含みます)、設計リソース (リファレンス デザインを含みます)、アプリケーションや設計に関する各種アドバイス、Web ツール、安全性情報、その他のリソースを、欠陥が存在する可能性のある「現状のまま」提供しており、商品性および特定目的に対する適合性の黙示保証、第三者の知的財産権の非侵害保証を含むいかなる保証も、明示的または黙示的にかかわらず拒否します。

これらのリソースは、TI 製品を使用する設計の経験を積んだ開発者への提供を意図したものです。(1) お客様のアプリケーションに適した TI 製品の選定、(2) お客様のアプリケーションの設計、検証、試験、(3) お客様のアプリケーションに該当する各種規格や、その他のあらゆる安全性、セキュリティ、規制、または他の要件への確実な適合に関する責任を、お客様のみが単独で負うものとします。

上記の各種リソースは、予告なく変更される可能性があります。これらのリソースは、リソースで説明されている TI 製品を使用するアプリケーションの開発の目的でのみ、TI はその使用をお客様に許諾します。これらのリソースに関して、他の目的で複製することや掲載することは禁止されています。TI や第三者の知的財産権のライセンスが付与されている訳ではありません。お客様は、これらのリソースを自身で使用した結果発生するあらゆる申し立て、損害、費用、損失、責任について、TI およびその代理人を完全に補償するものとし、TI は一切の責任を拒否します。

TI の製品は、 TI の販売条件 、 TI の総合的な品質ガイドライン 、 ti.com または TI 製品などに関連して提供される他の適用条件に従い提供されます。TI がこれらのリソースを提供することは、適用される TI の保証または他の保証の放棄の拡大や変更を意味するものではありません。 TI がカスタム、またはカスタマー仕様として明示的に指定していない限り、TI の製品は標準的なカタログに掲載される汎用機器です。

お客様がいかなる追加条項または代替条項を提案する場合も、TI はそれらに異議を唱え、拒否します。

Copyright © 2025, Texas Instruments Incorporated

最終更新日：2025 年 10 月