SDIO PORT EXPANDER WITH VOLTAGE-LEVEL TRANSLATION

FEATURES

- **6-to-12 Demultiplexer/Multiplexer Allows SDIO Port Expansion**
- **Built-in Level Translator Eliminates Voltage Mismatch Between Baseband and SD Card or SDIO Peripheral**
- **V_{CCA}, V_{CCB0}, and V_{CCB1} Each Operate Over Full 1.1-V to 3.6-V Range**
- **Latch-Up Performance Exceeds 100 mA Per JESD 78, Class II**
- **ESD Performance A Port**
  - **2000-V Human-Body Model (A114-B)**
  - **100-V Machine Model (A115-A)**
  - **1500-V Charged-Device Model (C101)**
- **±8-kV Contact Discharge IEC 61000-4-2 ESD Performance (B Port)**

DESCRIPTION/ORDERING INFORMATION

The TXS02612 is designed to interface the cell phone baseband with external SDIO peripherals. The device includes a 6-channel SPDT switch with voltage-level translation capability. This allows a single SDIO port to be interfaced with two SDIO peripherals. The TXS02612 has three separate supply rails that operate over the full range of 1.1 V to 3.6 V. This allows the baseband and SDIO peripherals to operate at different supply voltages if required.

The select (SEL) input is used to choose between the B0 port and B1 port. When SEL = Low, B0 port is selected; when SEL = High, B1 port is selected. SEL is referenced to V_{CCA}. For the unselected B port, the clock output is held low, whereas the data and command I/Os are pulled high to their respective V_{CCB} through a 70-kΩ resistor (±30% tolerance).

ORDERING INFORMATION(1)

T_A	PACKAGE(2)		ORDERABLE PART NUMBER	TOP-SIDE MARKING
–40°C to 85°C	MicroStar Junior™ BGA (VFBGA) – ZQS	Reel of 3000	TXS02612ZQSR	YJ612
	QFN – RTW	Reel of 3000	TXS02612RTWR	YJ612

(1) For the most current package and ordering information, see the Package Option Addendum at the end of this document, or see the TI web site at www.ti.com.
(2) Package drawings, thermal data, and symbolization are available at www.ti.com/packaging.

RTW PACKAGE (TOP VIEW)

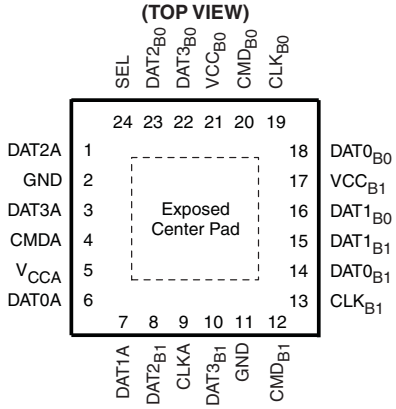

ZQS PACKAGE (TOP VIEW)

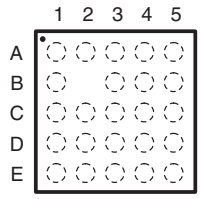

For RTW, if the exposed center pad is used, it must be connected to ground or electrically open.

Table 1. ZQS PACKAGE TERMINAL ASSIGNMENTS

	1	2	3	4	5
A	DAT2A	SEL	$DAT3_{B0}$	CMD_{B0}	CLK_{B0}
B	DAT3A		$DAT2_{B0}$	V_{CCB0}	$DAT0_{B0}$
C	CMDA	V_{CCA}	GND	$V_{CC\ B1}$	$DAT1_{B0}$
D	DAT0A	CLKA	GND	$DAT1_{B1}$	$DAT0_{B1}$
E	DAT1A	$DAT2_{B1}$	$DAT3_{B1}$	CMD_{B1}	CLK_{B1}

Please be aware that an important notice concerning availability, standard warranty, and use in critical applications of Texas Instruments semiconductor products and disclaimers thereto appears at the end of this data sheet.

PRODUCTION DATA information is current as of publication date. Products conform to specifications per the terms of the Texas Instruments standard warranty. Production processing does not necessarily include testing of all parameters.

Copyright © 2008–2009, Texas Instruments Incorporated

APPLICATION BLOCK DIAGRAM

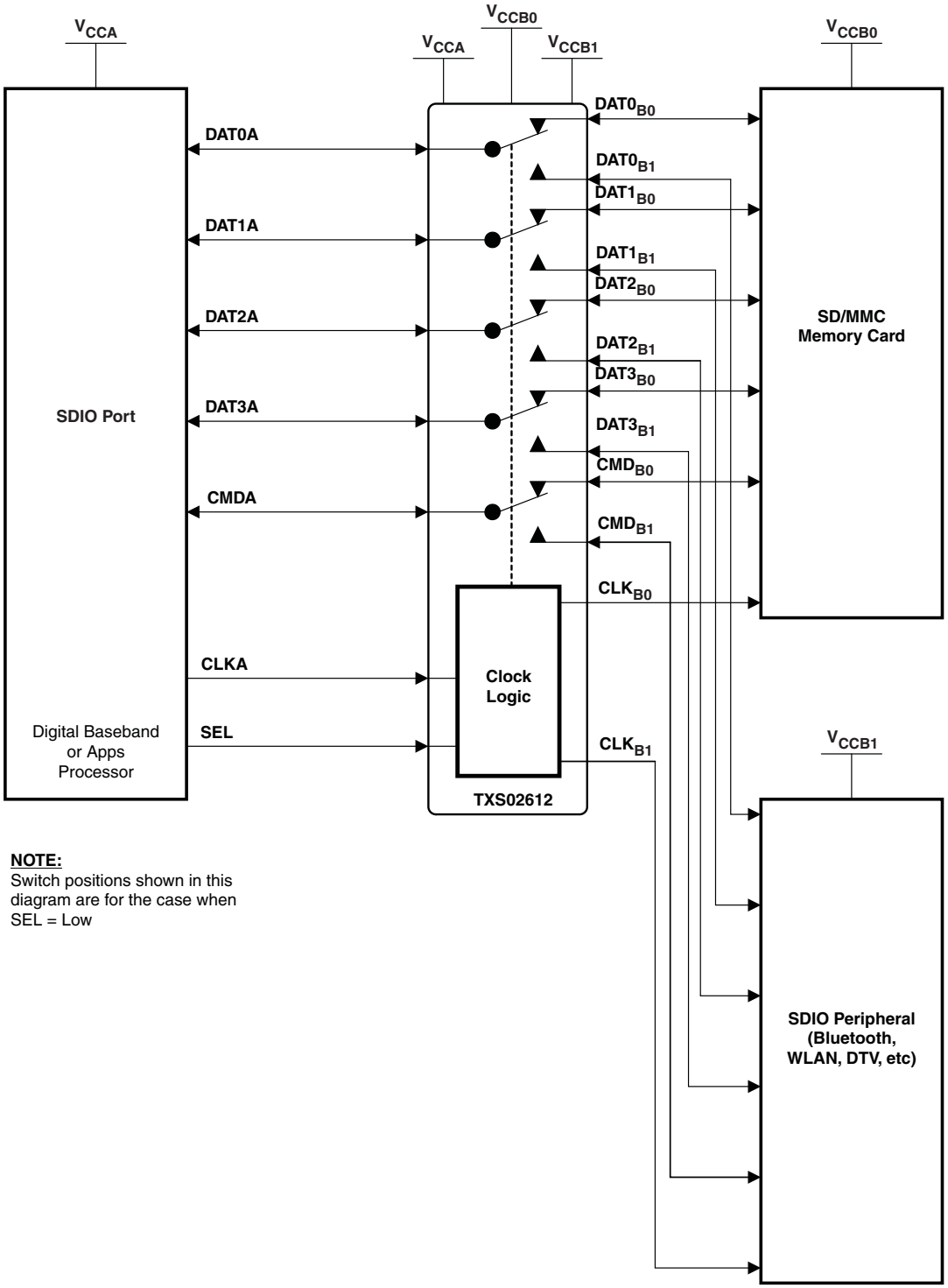

NOTE:
Switch positions shown in this diagram are for the case when SEL = Low

Copyright © 2008–2009, Texas Instruments Incorporated

PIN ASSIGNMENTS

RTW PACKAGE PIN NO.	ZQS PACKAGE BALL NO.	NAME	FUNCTION	TYPE
1	A1	DAT2A	Data bit 2. Referenced to V_{CCA}.	I/O
3	B1	DAT3A	Data bit 3. Referenced to V_{CCA}.	I/O
4	C1	CMDA	Command bit. Referenced to V_{CCA}.	I/O
6	D1	DAT0A	Data bit 0. Referenced to V_{CCA}.	I/O
7	E1	DAT1A	Data bit 1. Referenced to V_{CCA}.	I/O
24	A2	SEL	Select pin to choose between B0 and B1. Referenced to V_{CCA}.	Input
	B2		Depopulated	
5	C2	V_{CCA}	A-port supply voltage. 1.1 V ≤ V_{CCA} ≤ 3.6 V.	Power
9	D2	CLKA	Clock input A. Referenced to V_{CCA}.	Input
8	E2	$DAT2_{B1}$	Data bit 2. Referenced to V_{CCB1}.	I/O
22	A3	$DAT3_{B0}$	Data bit 3. Referenced to V_{CCB0}.	I/O
23	B3	$DAT2_{B0}$	Data bit 2. Referenced to V_{CCB0}.	I/O
2	C3	GND	Ground	
11	D3	GND	Ground	
10	E3	$DAT3_{B1}$	Data bit 3. Referenced to V_{CCB1}.	I/O
20	A4	CMD_{B0}	Command bit. Referenced to V_{CCB0}.	I/O
21	B4	V_{CCB0}	B0-port supply voltage. 1.1 V ≤ V_{CCB0} ≤ 3.6 V.	Power
17	C4	V_{CCB1}	B1-port supply voltage. 1.1 V ≤ V_{CCB1} ≤ 3.6 V.	Power
15	D4	$DAT1_{B1}$	Data bit 1. Referenced to V_{CCB1}.	I/O
12	E4	CMD_{B1}	Command bit. Referenced to V_{CCB1}.	I/O
19	A5	CLK_{B0}	Clock output. Referenced to V_{CCB0}.	Output
18	B5	$DAT0_{B0}$	Data bit 0. Referenced to V_{CCB0}.	I/O
16	C5	$DAT1_{B0}$	Data bit 1. Referenced to V_{CCB0}.	I/O
14	D5	$DAT0_{B1}$	Data bit 0. Referenced to V_{CCB1}.	I/O
13	E5	CLK_{B1}	Clock output. Referenced to V_{CCB1}.	Output

Copyright © 2008–2009, Texas Instruments Incorporated

SIMPLIFIED INTERNAL STRUCTURE

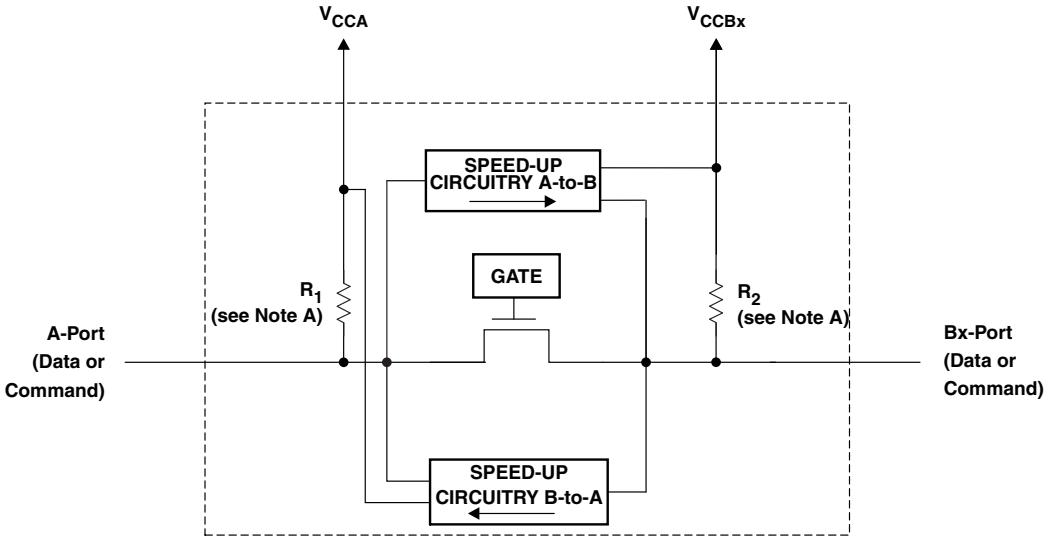

Simplified Architecture of Command and Each Data Path

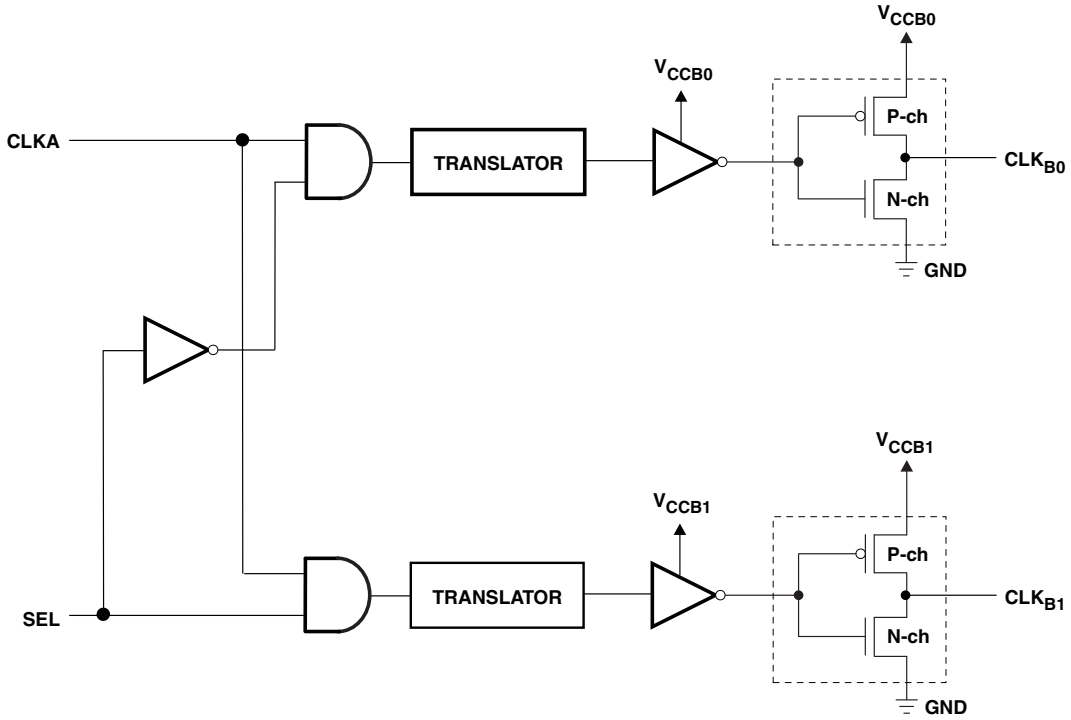

Simplified Architecture of the Clock Path

A. R_1 and R_2 resistor values are determined based upon the logic level applied to the A port or B port, as follows:
R_1 and R_2 = 40 kΩ when a logic level low is applied to the A port or B port.
R_1 and R_2 = 4 kΩ when a logic level high is applied to the A port or B port.
R_1 and R_2 = 70 kΩ when the port is deselected.

Copyright © 2008–2009, Texas Instruments Incorporated

FUNCTION TABLE

Clock Channel			
SEL	**CLKB0**	**CLKB1**	**OPERATION**
L	Active	Low	CLKA to CLKB0
H	Low	Active	CLKA to CLKB1
Data and Command Channel			
SEL	**DATxB0 or CMDxB0**	**DATxB1 or CMDxB1**	**OPERATION**
L	Active	Disabled, pulled to V_{CCB1} through 70 kΩ	DATxA to DATxB0, CMDA to CMDB0
H	Disabled, pulled to V_{CCB0} through 70 kΩ	Active	DATxA to DATxB1, CMDA to CMDB1

ABSOLUTE MAXIMUM RATINGS(1) (2)

over operating free-air temperature range (unless otherwise noted)

			MIN	MAX	UNIT
V_{CCA} V_{CCB0} V_{CCB1}	Supply voltage range(2)		–0.5	4.6	V
V_I	Input voltage range	A port, B0 port, B1 port, control inputs	–0.5	V_{CCx} + 0.5	V
V_O	Voltage range applied to any output in the high-impedance or power-off state	A port, B0 port, B1 port	–0.5	V_{CCx} + 0.5	V
I_{IK}	Input clamp current	$V_I < 0$		–50	mA
I_{OK}	Output clamp current	$V_O < 0$		–50	mA
I_{CC}/ I_{GND}	Continuous current through V_{CCA}, V_{CCB0}, V_{CCB1}, or GND			±100	mA
T_{stg}	Storage temperature range		–65	150	°C

(1) Stresses beyond those listed under "absolute maximum ratings" may cause permanent damage to the device. These are stress ratings only, and functional operation of the device at these or any other conditions beyond those indicated under "recommended operating conditions" is not implied. Exposure to absolute-maximum-rated conditions for extended periods may affect device reliability.
(2) The input and output voltage ratings may be exceeded if the input and output clamp-current ratings are observed.

PACKAGE THERMAL IMPEDANCE

PARAMETER				UNIT
θ_{JA}	Package thermal impedance	RTW package	66	°C/W
		ZQS package	171.6	

RECOMMENDED OPERATING CONDITIONS

			V_{CCA}	V_{CCBx} (1)	MIN	MAX	UNIT
V_{CCA} V_{CCB0} V_{CCB1}	Supply voltage				1.1	3.6	V
V_{IH}	High-level input voltage	A-port I/Os	1.1 V to 3.6 V	1.1 V to 3.6 V	V_{CCI} – 0.2	V_{CCI}	V
		B-port I/Os			V_{CCI} – 0.2	V_{CCI}	
		SEL, CLKA			V_{CCA} × 0.65 V	3.6	
V_{IL}	Low-level input voltage	A-port I/Os	1.1 V to 3.6 V	1.1 V to 3.6 V	0	0.15	V
		B-port I/Os			0	0.15	
		SEL, CLKA			0	V_{CCA} × 0.35	
Δt/Δv	Input transition rise or fall rate	CLK, SEL				10	ns/V
T_A	Operating free-air temperature				–40	85	°C

(1) V_{CCBx} refers to V_{CCB0} and V_{CCB1}.

ELECTRICAL CHARACTERISTICS

over recommended operating free-air temperature range (unless otherwise noted)

PARAMETER	TEST CONDITIONS	V_{CCA}	V_{CCBx}	T_A = 25°C	T_A = –40°C to 85°C		UNIT
				TYP	MIN	MAX	
V_{OHA} (DATA & CMD)	I_{OH} = –20 μA, V_{IBx} ≥ V_{CCBx} – 0.2 V	1.1 V	1.1 V		0.74		V
		1.4 V	1.4 V		V_{CCA} × 0.67		
		1.65 V	1.65 V		V_{CCA} × 0.67		
		2.3 V	2.3 V		V_{CCA} × 0.67		
		3 V	3 V		V_{CCA} × 0.67		
V_{OLA} (DATA & CMD)	I_{OL} = 135 μA, V_{IBx} ≤ 0.15 V	1.1 V	1.1 V			0.35	V
	I_{OL} = 180 μA, V_{IBx} ≤ 0.15 V	1.4 V	1.4 V			0.35	
	I_{OL} = 220 μA, V_{IBx} ≤ 0.15 V	1.65 V	1.65 V			0.45	
	I_{OL} = 300 μA, V_{IBx} ≤ 0.15 V	2.3 V	2.3 V			0.55	
	I_{OL} = 620 μA, V_{IBx} ≤ 0.15 V	3 V	3 V			0.70	
V_{OHB} (DATA & CMD)	I_{OH} = –20 μA, V_{IAx} ≥ V_{CCAx} – 0.2 V	1.1 V	1.1 V		0.74		V
		1.4 V	1.4 V		V_{CCBx} × 0.67		
		1.65 V	1.65 V		V_{CCBx} × 0.67		
		2.3 V	2.3 V		V_{CCBx} × 0.67		
		3 V	3 V		V_{CCBx} × 0.67		
V_{OHCLKB}	I_{OH} = – 0.5 mA	1.1 V	1.1 V		0.74		V
	I_{OH} = – 1 mA	1.4 V	1.4 V		1.05		
	I_{OH} = – 2 mA	1.65 V	1.65 V		1.2		
	I_{OH} = – 4 mA	2.3 V	2.3 V		1.75		
	I_{OH} = – 8 mA	3 V	3 V		2.3		
V_{OLB} (DATA & CMD)	I_{OL} = 135 μA, V_{IAx} ≤ 0.15 V	1.1 V	1.1 V			0.35	V
	I_{OL} = 180 μA, V_{IAx} ≤ 0.15 V	1.4 V	1.4 V			0.35	
	I_{OL} = 220 μA, V_{IAx} ≤ 0.15 V	1.65 V	1.65 V			0.45	
	I_{OL} = 300 μA, V_{IAx} ≤ 0.15 V	2.3 V	2.3 V			0.55	
	I_{OL} = 620 μA, V_{IAx} ≤ 0.15 V	3 V	3 V			0.70	
V_{OLCLKB}	I_{OL} = 0.5 mA	1.1 V	1.1 V			0.35	V
	I_{OL} = 1 mA	1.4 V	1.4 V			0.35	
	I_{OL} = 2 mA	1.65 V	1.65 V			0.45	
	I_{OL} = 4 mA	2.3 V	2.3 V			0.55	
	I_{OL} = 8 mA	3 V	3 V			0.7	

Copyright © 2008–2009, Texas Instruments Incorporated

ELECTRICAL CHARACTERISTICS (continued)

over recommended operating free-air temperature range (unless otherwise noted)

PARAMETER	TEST CONDITIONS	V_{CCA}	V_{CCBx}	T_A = 25°C	T_A = –40°C to 85°C		UNIT
				TYP	MIN	MAX	
I_I	SEL, CLKA	1.1 V to 3.6 V	1.1 V to 3.6 V	±1		±2	µA
	DAT, CMD			±1		±2	
I_{CCA}	$V_I = V_O$ = Open, I_O = 0, SEL, CLK = High or Low	1.1 V to 3.6 V	1.1 V to 3.6 V			12	µA
		3.6 V	0 V			12	
		0 V	3.6 V			–1	
I_{CCB0} or I_{CCB1}	$V_I = V_O$ = Open, I_O = 0, SEL, CLK = High or Low	1.1 V to 3.6 V	1.1 V to 3.6 V			24	µA
		3.6 V	0 V			–12	
		0 V	3.6 V			24	
C_i	SEL, CLKA	3.3 V	3.3 V	2.5		3.5	pF
C_{io}	A port	3.3 V	3.3 V	7		7.5	pF
	B port			9.5		10	

TIMING REQUIREMENTS

T_A = 25°C, V_{CCA} = 1.2 V

				V_{CCB} = 1.2 V	V_{CCB} = 1.5 V	V_{CCB} = 1.8 V	V_{CCB} = 2.5 V	V_{CCB} = 3.3 V	UNIT
				TYP	TYP	TYP	TYP	TYP	
Data rate	Command	Push-pull driving		60	80	120	120	120	Mbps
		Open-drain driving		2	2	2	2	2	
	Clock	Push-pull driving		30	40	60	60	60	MHz
	Data	Push-pull driving		60	80	120	120	120	Mbps
t_w	Pulse duration	Push-pull driving	CLK	17	13	8	8	8	ns
		Open-drain driving	CMD	500	500	500	500	500	
		Push-pull driving	Data	17	13	8	8	8	
			CMD	17	13	8	8	8	

Copyright © 2008–2009, Texas Instruments Incorporated

TIMING REQUIREMENTS

over recommended operating free-air temperature range, V_{CCA} = 1.5 V ± 0.1 V (unless otherwise noted)

				V_{CCB} = 1.2 V	V_{CCB} = 1.5 V ± 0.1 V		V_{CCB} = 1.8 V ± 0.15 V		V_{CCB} = 2.5 V ± 0.2 V		V_{CCB} = 3.3 V ± 0.3 V		UNIT
				TYP	MIN	MAX	MIN	MAX	MIN	MAX	MIN	MAX	
Data rate	Command	Push-pull driving		60		80		120		120		120	Mbps
		Open-drain driving		2		2		2		2		2	
	Clock	Push-pull driving		30		40		60		60		60	MHz
	Data	Push-pull driving		60		80		120		120		120	Mbps
t_w	Pulse duration	Push-pull driving	CLK	17	13		8		8		8		ns
		Open-drain driving	CMD	500	500		500		500		500		
		Push-pull driving	Data	17	13		8		8		8		
			CMD	17	13		8		8		8		

TIMING REQUIREMENTS

over recommended operating free-air temperature range, V_{CCA} = 1.8 V ± 0.15 V (unless otherwise noted)

				V_{CCB} = 1.2 V	V_{CCB} = 1.5 V ± 0.1 V		V_{CCB} = 1.8 V ± 0.15 V		V_{CCB} = 2.5 V ± 0.2 V		V_{CCB} = 3.3 V ± 0.3 V		UNIT
				TYP	MIN	MAX	MIN	MAX	MIN	MAX	MIN	MAX	
Data rate	Command	Push-pull driving		60		80		120		120		120	Mbps
		Open-drain driving		2		2		2		2		2	
	Clock	Push-pull driving		30		40		60		60		60	MHz
	Data	Push-pull driving		60		80		120		120		120	Mbps
t_w	Pulse duration	Push-pull driving	CLK	17	13		8		8		8		ns
		Open-drain driving	CMD	500	500		500		500		500		
		Push-pull driving	Data	17	13		8		8		8		
			CMD	17	13		8		8		8		

Copyright © 2008–2009, Texas Instruments Incorporated

TIMING REQUIREMENTS

over recommended operating free-air temperature range, V_{CCA} = 2.5 V ± 0.2 V (unless otherwise noted)

				V_{CCB} = 1.2 V	V_{CCB} = 1.5 V ± 0.1 V		V_{CCB} = 1.8 V ± 0.15 V		V_{CCB} = 2.5 V ± 0.2 V		V_{CCB} = 3.3 V ± 0.3 V		UNIT
				TYP	MIN	MAX	MIN	MAX	MIN	MAX	MIN	MAX	
Data rate	Command	Push-pull driving		60		80		120		120		120	Mbps
		Open-drain driving		2		2		2		2		2	
	Clock	Push-pull driving		30		40		60		60		60	MHz
	Data	Push-pull driving		60		80		120		120		120	Mbps
t_w	Pulse duration	Push-pull driving	CLK	17	13		8		8		8		ns
		Open-drain driving	CMD	500	500		500		500		500		
		Push-pull driving	Data	17	13		8		8		8		
			CMD	17	13		8		8		8		

TIMING REQUIREMENTS

over recommended operating free-air temperature range, V_{CCA} = 3.3 V ± 0.3 V (unless otherwise noted)

				V_{CCB} = 1.2 V	V_{CCB} = 1.5 V ± 0.1 V		V_{CCB} = 1.8 V ± 0.15 V		V_{CCB} = 2.5 V ± 0.2 V		V_{CCB} = 3.3 V ± 0.3 V		UNIT
				TYP	MIN	MAX	MIN	MAX	MIN	MAX	MIN	MAX	
Data rate	Command	Push-pull driving		60		80		120		120		120	Mbps
		Open-drain driving		2		2		2		2		2	
	Clock	Push-pull driving		30		40		60		60		60	MHz
	Data	Push-pull driving		60		80		120		120		120	Mbps
t_w	Pulse duration	Push-pull driving	CLK	17	13		8		8		8		ns
		Open-drain driving	CMD	500	500		500		500		500		
		Push-pull driving	Data	17	13		8		8		8		
			CMD	17	13		8		8		8		

Copyright © 2008–2009, Texas Instruments Incorporated

SWITCHING CHARACTERISTICS

T_A = 25°C, V_{CCA} = 1.2 V

PARAMETER	FROM (INPUT)	TO (OUTPUT)	TEST CONDITIONS	V_{CCB} = 1.2 V	V_{CCB} = 1.5 V	V_{CCB} = 1.8 V	V_{CCB} = 2.5 V	V_{CCB} = 3.3 V	UNIT
				TYP	TYP	TYP	TYP	TYP	
t_{PD}	CMDA	CMDB	Push-pull driving	5.9	4.8	4.4	4	4.46	ns
			Open-drain driving	238	214	192	159	140	
	CMDB	CMDA	Push-pull driving	5.6	4.8	4.4	4.1	4	
			Open-drain driving	227	201	176	137	114	
	CLKA	CLKB	Push-pull driving	5.5	4.1	3.6	3.2	3	
	DATA	DATB	Push-pull driving	5.8	4.8	4.4	4.2	6.8	
	DATB	DATA		5.6	4.8	4.4	4.1	4	
	SEL	B-Port	Push-pull driving	13	11	10	9.4	9.1	
t_{rA}	A-port rise time		Push-pull driving	4.8	5.1	5.1	5.3	5.7	ns
t_{rB}	B-port rise time		Push-pull driving	6.1	3.8	2.9	1.9	1.5	
t_{rB}	CLKA	CLKB	Push-pull driving	5.2	3.4	2.6	1.7	1.3	
t_{fA}	A-port fall time		Push-pull driving	3.4	2.8	2.6	2.6	2.6	
t_{fB}	B-port fall time		Push-pull driving	4.2	3	2.3	1.7	1.5	
t_{fB}	CLKA	CLKB	Push-pull driving	3.1	2.1	1.6	1.2	1	
$t_{sk(O)}$	ChA-to-ChB skew		Push-pull driving	0.4	0.4	0.3	0.4	0.4	ns
	ChB-to-ChA skew		Push-pull driving	0.3	0.3	0.3	0.3	0.4	
	Channel-to-Clock skew		Push-pull driving	1.68	1.5	1.5	1.5	1.7	
Max data rate	Command		Push-pull driving	60	80	120	120	120	Mbps
			Open-drain driving	2	2	2	2	2	
	Clock		Push-pull driving	30	40	60	60	60	MHz
	Data		Push-pull driving	60	80	120	120	120	Mbps

Copyright © 2008–2009, Texas Instruments Incorporated

SWITCHING CHARACTERISTICS

over operating free-air temperature range, V_{CCA} = 1.5 V ± 0.1 V (unless otherwise noted)

PARAMETER	FROM (INPUT)	TO (OUTPUT)	TEST CONDITIONS	V_{CCB} = 1.2 V	V_{CCB} = 1.5 V ± 0.1 V		V_{CCB} = 1.8 V ± 0.15 V		V_{CCB} = 2.5 V ± 0.2 V		V_{CCB} = 3.3 V ± 0.3 V		UNIT
				TYP	MIN	MAX	MIN	MAX	MIN	MAX	MIN	MAX	
t_{PD}	CMDA	CMDB	Push-pull driving	5.1		13		9		8		7.5	ns
			Open-drain driving	210		777		756		684		758	
	CMDB	CMDA	Push-pull driving	4.5		10.6		9.2		8.5		8.2	
			Open-drain driving	200		616		560		433		375	
	CLKA	CLKB	Push-pull driving	4.7		13.1		9.8		6		5.2	
	DATA	DATB	Push-pull driving	5.1		13		9		8		7.8	
	DATB	DATA		4.5		11		9.3		8.8		8.4	
	SEL	B-Port	Push-pull driving	9.5		26		21		19		18	
t_{rA}	A-port rise time		Push-pull driving	2.7	1.5	5.8	1.7	5.9	1.7	6	1.8	6.1	ns
t_{rB}	B-port rise time		Push-pull driving	3.3	1.7	8.2	1.3	6.6	1	4.3	0.8	2.9	
t_{rB}	CLKA	CLKB	Push-pull driving	5.2	1.7	6.4	1.3	4.9	0.9	3.2	0.8	2.5	
t_{fA}	A-port fall time		Push-pull driving	2.4	1	3.9	0.9	3.4	0.9	3.2	1.3	3.3	ns
t_{fB}	B-port fall time		Push-pull driving	3.7	1.1	6.3	0.9	5.2	0.6	3.9	0.6	3.2	
t_{fB}	CLKA	CLKB	Push-pull driving	3.1	0.9	4.1	0.8	3.2	0.5	2.2	0.5	1.9	
$t_{sk(O)}$	ChA-to-ChB skew		Push-pull driving	0.32		0.47		0.58		0.63		0.63	ns
	ChB-to-ChA skew		Push-pull driving	0.27		0.24		0.23		0.22		0.22	
	Channel-to-Clock skew		Push-pull driving	1.47		1.66		1.68		1.82		1.77	
Max data rate	Command		Push-pull driving	60		80		120		120		120	Mbps
			Open-drain driving	2		2		2		2		2	
	Clock		Push-pull driving	30		40		60		60		60	MHz
	Data		Push-pull driving	60		80		120		120		120	Mbps

Copyright © 2008–2009, Texas Instruments Incorporated

SWITCHING CHARACTERISTICS

over operating free-air temperature range, V_{CCA} = 1.8 V ± 0.15 V (unless otherwise noted)

PARAMETER	FROM (INPUT)	TO (OUTPUT)	TEST CONDITIONS	V_{CCB} = 1.2 V	V_{CCB} = 1.5 V ± 0.1 V		V_{CCB} = 1.8 V ± 0.15 V		V_{CCB} = 2.5 V ± 0.2 V		V_{CCB} = 3.3 V ± 0.3 V		UNIT
				TYP	MIN	MAX	MIN	MAX	MIN	MAX	MIN	MAX	
t_{PD}	CMDA	CMDB	Push-pull driving	4.8		12		8		6		5.7	ns
			Open-drain driving	183		726		715		686		780	
	CMDB	CMDA	Push-pull driving	4		9		7		6.4		6	
			Open-drain driving	175		565		563		441		392	
	CLKA	CLKB	Push-pull driving	4.5		13		9		5.4		4.5	
	DATA	DATB	Push-pull driving	4.7		12		8.4		6		5.8	
	DATB	DATA		4.1		9		7.5		6.4		6.3	
	SEL	B-Port	Push-pull driving	8.2		22		17		14.8		14	
t_{rA}	A-port rise time		Push-pull driving	2	1.1	4	1.1	4.3	1.2	4.5	1.3	4.6	ns
t_{rB}	B-port rise time		Push-pull driving	6.2	1.7	7.9	1.2	6.2	1	4.3	0.8	3.1	
t_{rB}	CLKA	CLKB	Push-pull driving	5.2	1.7	6.4	1.3	4.9	0.9	3.2	0.8	2.5	
t_{fA}	A-port fall time		Push-pull driving	1.8	0.8	3.2	0.7	2.8	0.7	1.7	0.7	2.6	ns
t_{fB}	B-port fall time		Push-pull driving	3.5	1	5.6	0.9	3.5	0.6	1.9	0.6	3	
t_{fB}	CLKA	CLKB	Push-pull driving	3.1	0.9	4.1	0.8	3.2	0.5	2.2	0.5	1.9	
$t_{sk(O)}$	ChA-to-ChB skew		Push-pull driving	0.33		0.45		0.48		0.53		0.67	ns
	ChB-to-ChA skew		Push-pull driving	0.28		0.24		0.23		0.23		0.22	
	Channel-to-Clock skew		Push-pull driving	1.51		1.58		1.46		1.56		1.48	
Max data rate	Command		Push-pull driving	60		80		120		120		120	Mbps
			Open-drain driving	2		2		2		2		2	
	Clock		Push-pull driving	30		40		60		60		60	MHz
	Data		Push-pull driving	60		80		120		120		120	Mbps

Copyright © 2008–2009, Texas Instruments Incorporated

SWITCHING CHARACTERISTICS

over operating free-air temperature range, V_{CCA} = 2.5 V ± 0.2 V (unless otherwise noted)

PARAMETER	FROM (INPUT)	TO (OUTPUT)	TEST CONDITIONS	V_{CCB} = 1.2 V	V_{CCB} = 1.5 V ± 0.1 V		V_{CCB} = 1.8 V ± 0.15 V		V_{CCB} = 2.5 V ± 0.2 V		V_{CCB} = 3.3 V ± 0.3 V		UNIT
				TYP	MIN	MAX	MIN	MAX	MIN	MAX	MIN	MAX	
t_{PD}	CMDA	CMDB	Push-pull driving	4.4		11		7.4		4.4		3.8	ns
			Open-drain driving	143		544		596		605		669	
	CMDB	CMDA	Push-pull driving	3.8		7.6		5.5		4.2		3.7	
			Open-drain driving	137		434		444		414		372	
	CLKA	CLKB	Push-pull driving	4.1		12		8		4.8		3.8	
	DATA	DATB	Push-pull driving	4.4		11		7		4.5		3.8	
	DATB	DATA		4.4		8		5.5		4.1		3.7	
	SEL	B-Port	Push-pull driving	7		18		13		10.5		9	
t_{rA}	A-port rise time		Push-pull driving	1.4	0.75	2.2	0.74	2.2	1.06	2.6	0.7	2.8	ns
t_{rB}	B-port rise time		Push-pull driving	6.3	1.91	7.7	1.34	6.1	0.95	4.2	0.83	3.2	
t_{rB}	CLKA	CLKB	Push-pull driving	5.2	1.67	6.4	1.27	4.9	0.9	3.2	0.76	2.6	
t_{fA}	A-port fall time		Push-pull driving	1.1	0.58	1.9	0.58	2	0.61	1.9	0.57	1.9	ns
t_{fB}	B-port fall time		Push-pull driving	3.6	1.04	5.4	0.87	4.3	0.66	3.4	0.57	3	
t_{fB}	CLKA	CLKB	Push-pull driving	3.1	0.92	4.2	0.79	3.2	0.56	2.2	0.49	1.9	
$t_{sk(O)}$	ChA-to-ChB skew		Push-pull driving	0.41		0.43		0.39		0.59		0.68	ns
	ChB-to-ChA skew		Push-pull driving	0.41		0.24		0.2		0.19		0.18	
	Channel-to-Clock skew		Push-pull driving	2.11		1.47		1.3		1.25		1.21	
Max data rate	Command		Push-pull driving	60		80		120		120		120	Mbps
			Open-drain driving	2		2		2		2		2	
	Clock		Push-pull driving	30		40		60		60		60	MHz
	Data		Push-pull driving	60		80		120		120		120	Mbps

Copyright © 2008–2009, Texas Instruments Incorporated

SWITCHING CHARACTERISTICS

over operating free-air temperature range, V_{CCA} = 3.3 V ± 0.3 V (unless otherwise noted)

PARAMETER	FROM (INPUT)	TO (OUTPUT)	TEST CONDITIONS	V_{CCB} = 1.2 V	V_{CCB} = 1.5 V ± 0.1 V		V_{CCB} = 1.8 V ± 0.15 V		V_{CCB} = 2.5 V ± 0.2 V		V_{CCB} = 3.3 V ± 0.3 V		UNIT
				TYP	MIN	MAX	MIN	MAX	MIN	MAX	MIN	MAX	
t_{PD}	CMDA	CMDB	Push-pull driving	4.4		11		7		4.1		3.3	ns
			Open-drain driving	116		432		477		506		533	
	CMDB	CMDA	Push-pull driving	4.2		7.5		5.4		3.8		3	
			Open-drain driving	112		349		363		347		324	
	CLKA	CLKB	Push-pull driving	4.1		12		7.8		4.4		3.5	
	DATA	DATB	Push-pull driving	4.3		11		6.8		4		3.8	
	DATB	DATA		7.9		7.8		5.4		3.4		3	
	SEL	B-Port	Push-pull driving	6.4		16		11.5		8.8		7.6	
t_{rA}	A-port rise time		Push-pull driving	1.1	0.57	1.7	0.57	1.8	0.56	1.7	0.53	1.8	ns
t_{rB}	B-port rise time		Push-pull driving	6.2	1.96	7.7	1.43	6.1	0.95	4.2	0.71	3.1	
t_{rB}	CLKA	CLKB	Push-pull driving	5.2	1.67	6.4	1.26	4.9	0.91	3.3	0.76	2.5	
t_{fA}	A-port fall time		Push-pull driving	1	0.53	1.6	0.52	1.6	0.53	1.6	0.56	1.6	ns
t_{fB}	B-port fall time		Push-pull driving	3.4	0.95	5.2	0.8	4.1	0.63	3.2	0.58	2.9	
t_{fB}	CLKA	CLKB	Push-pull driving	3.1	0.92	4.1	0.79	3.2	0.56	2.2	0.49	1.9	
$t_{sk(O)}$	ChA-to-ChB skew		Push-pull driving	0.39		0.36		0.39		0.57		0.65	ns
	ChB-to-ChA skew		Push-pull driving	0.45		0.3		0.19		0.19		0.18	
	Channel-to-Clock skew		Push-pull driving	1.7		1.61		1.34		1.22		1.14	
Max data rate	Command		Push-pull driving	60		80		120		120		120	Mbps
			Open-drain driving	2		2		2		2		2	
	Clock		Push-pull driving	30		40		60		60		60	MHz
	Data		Push-pull driving	60		80		120		120		120	Mbps

OPERATING CHARACTERISTICS

over operating free-air temperature range (unless otherwise noted)

PARAMETER			TEST CONDITIONS	V_{CCA}					UNIT
				1.2 V	1.5 V	1.8 V	2.5 V	3.3 V	
				V_{CCB}					
				1.2 V	1.5 V	1.8 V	2.5 V	3.3 V	
				TYP	TYP	TYP	TYP	TYP	
Data and CMD	C_{pdA}	A-port input, B-port output	C_L = 0, f = 10 MHz, t_r = t_f = 1 ns, OE = outputs enabled	14.5	12.9	12.1	13.4	15	pF
		B-port input, A-port output		20.7	20.7	21	22	23.2	
	C_{pdB}	A-port input, B-port output		23.2	23.4	23.6	24.5	25.5	
		B-port input, A-port output		14.1	12.2	11.5	12.9	14.4	
		A-port input, B-port output	OE = outputs disabled	0.1	0.1	0.1	0.1	0.1	
Clock	C_{pdA}	A-port input, B-port output	C_L = 0, f = 10 MHz, t_r = t_f = 1 ns, OE = outputs enabled	0.4	0.4	0.4	0.5	0.7	pF
	C_{pdB}	B-port input, A-port output		14	13.9	13.8	13.8	13.7	

Copyright © 2008–2009, Texas Instruments Incorporated

POWER-UP CONSIDERATIONS

The following power-up sequence for this TXS02612 SDIO port expander with voltage-level translator should be followed to ensure proper operation and to avoid any unnecessary excessive supply current, bus contention, oscillations, or other anomalies caused by improperly biased device pins. The following power-up sequence should be used to safe-guard against these problems:

1. Connect the ground pin of the device first before any power-supply voltage is applied.
2. Connect and power up V_{CCA}, which internally powers up the SEL control logic of the TXS02612.
3. Depending on the port to be chosen, the SEL pin can be high or low. If SEL high is needed (i.e., A port to B_1 port), ramp the SEL pin with the V_{CCA} power supply. Otherwise, keep SEL Low.
4. Apply V_{CCB0} and V_{CCB1} only after the V_{CCA} power supply is applied.

Copyright © 2008–2009, Texas Instruments Incorporated

PARAMETER MEASUREMENT INFORMATION

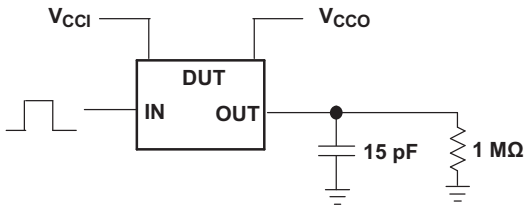

DATA RATE, PULSE DURATION, PROPAGATION DELAY, ENABLE/DISABLE OUTPUT RISE AND FALL TIME MEASUREMENT USING A PUSH-PULL DRIVER

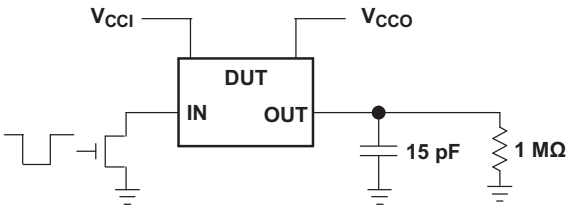

DATA RATE, PULSE DURATION, PROPAGATION DELAY, OUTPUT RISE AND FALL TIME MEASUREMENT USING AN OPEN-DRAIN DRIVER

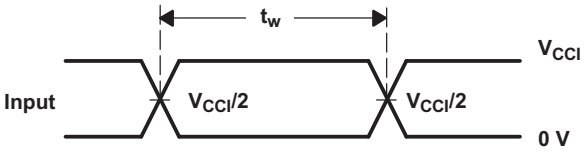

VOLTAGE WAVEFORMS PULSE DURATION

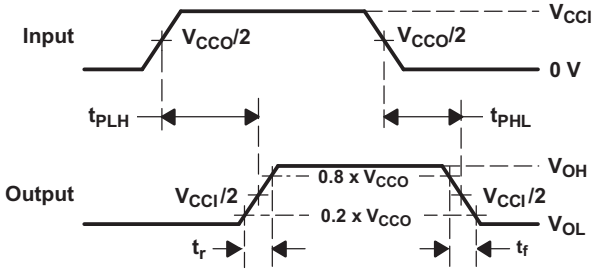

VOLTAGE WAVEFORMS PROPAGATION DELAY TIMES

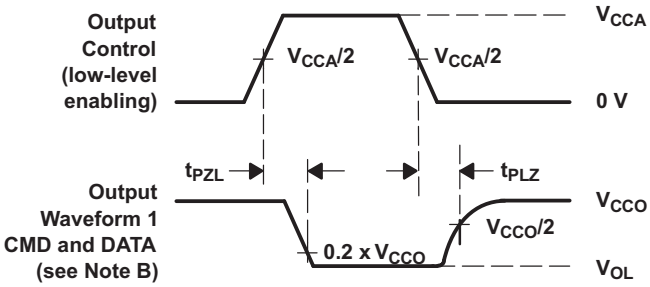

VOLTAGE WAVEFORMS ENABLE AND DISABLE TIMES

NOTES:
A. C_L includes probe and jig capacitance.
B. Waveform 1 is for an output with internal conditions such that the output is low except when disabled by the output control. Waveform 2 is for an output with internal conditions such that the output is high, except when disabled by the output control.
C. All input pulses are supplied by generators having the following characteristics: PRR 10 MHz, Z_O = 50Ω, dv/dt ≥ 1 V/ns.
D. The outputs are measured one at a time, with one transition per measurement.
E. t_{PLZ} and t_{PHZ} are the same as t_{dis}.
F. t_{PZL} and t_{PZH} are the same as t_{en}.
G. t_{PLH} and t_{PHL} are the same as t_{pd}.
H. V_{CCI} is the V_{CC} associated with the input port.
I. V_{CCO} is the V_{CC} associated with the output port.
J. All parameters and waveforms are not applicable to all devices.

Figure 1. Load Circuit and Voltage Waveforms

Copyright © 2008–2009, Texas Instruments Incorporated

PACKAGING INFORMATION

Orderable part number	Status (1)	Material type (2)	Package | Pins	Package qty | Carrier	RoHS (3)	Lead finish/ Ball material (4)	MSL rating/ Peak reflow (5)	Op temp (°C)	Part marking (6)
TXS02612RTWR	Active	Production	WQFN (RTW) | 24	3000 | LARGE T&R	Yes	NIPDAU	Level-2-260C-1 YEAR	-40 to 85	YJ612
TXS02612RTWR.B	Active	Production	WQFN (RTW) | 24	3000 | LARGE T&R	Yes	NIPDAU	Level-2-260C-1 YEAR	-40 to 85	YJ612
TXS02612RTWRG4	Active	Production	WQFN (RTW) | 24	3000 | LARGE T&R	Yes	NIPDAU	Level-2-260C-1 YEAR	-40 to 85	YJ612
TXS02612RTWRG4.B	Active	Production	WQFN (RTW) | 24	3000 | LARGE T&R	Yes	NIPDAU	Level-2-260C-1 YEAR	-40 to 85	YJ612

(1) **Status:** For more details on status, see our product life cycle.

(2) **Material type:** When designated, preproduction parts are prototypes/experimental devices, and are not yet approved or released for full production. Testing and final process, including without limitation quality assurance, reliability performance testing, and/or process qualification, may not yet be complete, and this item is subject to further changes or possible discontinuation. If available for ordering, purchases will be subject to an additional waiver at checkout, and are intended for early internal evaluation purposes only. These items are sold without warranties of any kind.

(3) **RoHS values:** Yes, No, RoHS Exempt. See the TI RoHS Statement for additional information and value definition.

(4) **Lead finish/Ball material:** Parts may have multiple material finish options. Finish options are separated by a vertical ruled line. Lead finish/Ball material values may wrap to two lines if the finish value exceeds the maximum column width.

(5) **MSL rating/Peak reflow:** The moisture sensitivity level ratings and peak solder (reflow) temperatures. In the event that a part has multiple moisture sensitivity ratings, only the lowest level per JEDEC standards is shown. Refer to the shipping label for the actual reflow temperature that will be used to mount the part to the printed circuit board.

(6) **Part marking:** There may be an additional marking, which relates to the logo, the lot trace code information, or the environmental category of the part.

Multiple part markings will be inside parentheses. Only one part marking contained in parentheses and separated by a "~" will appear on a part. If a line is indented then it is a continuation of the previous line and the two combined represent the entire part marking for that device.

Important Information and Disclaimer: The information provided on this page represents TI's knowledge and belief as of the date that it is provided. TI bases its knowledge and belief on information provided by third parties, and makes no representation or warranty as to the accuracy of such information. Efforts are underway to better integrate information from third parties. TI has taken and continues to take reasonable steps to provide representative and accurate information but may not have conducted destructive testing or chemical analysis on incoming materials and chemicals. TI and TI suppliers consider certain information to be proprietary, and thus CAS numbers and other limited information may not be available for release.

In no event shall TI's liability arising out of such information exceed the total purchase price of the TI part(s) at issue in this document sold by TI to Customer on an annual basis.

TAPE AND REEL INFORMATION

REEL DIMENSIONS

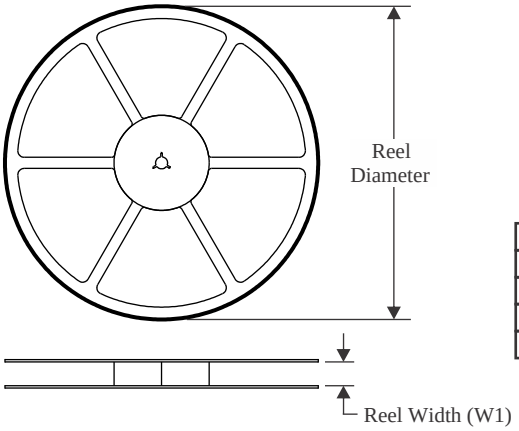

TAPE DIMENSIONS

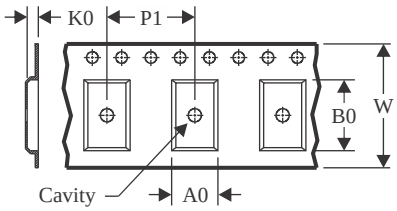

A0	Dimension designed to accommodate the component width
B0	Dimension designed to accommodate the component length
K0	Dimension designed to accommodate the component thickness
W	Overall width of the carrier tape
P1	Pitch between successive cavity centers

QUADRANT ASSIGNMENTS FOR PIN 1 ORIENTATION IN TAPE

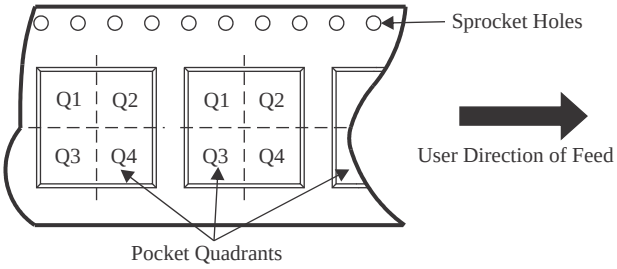

*All dimensions are nominal

Device	Package Type	Package Drawing	Pins	SPQ	Reel Diameter (mm)	Reel Width W1 (mm)	A0 (mm)	B0 (mm)	K0 (mm)	P1 (mm)	W (mm)	Pin1 Quadrant
TXS02612RTWR	WQFN	RTW	24	3000	330.0	12.4	4.25	4.25	1.15	8.0	12.0	Q2
TXS02612RTWRG4	WQFN	RTW	24	3000	330.0	12.4	4.25	4.25	1.15	8.0	12.0	Q2

TAPE AND REEL BOX DIMENSIONS

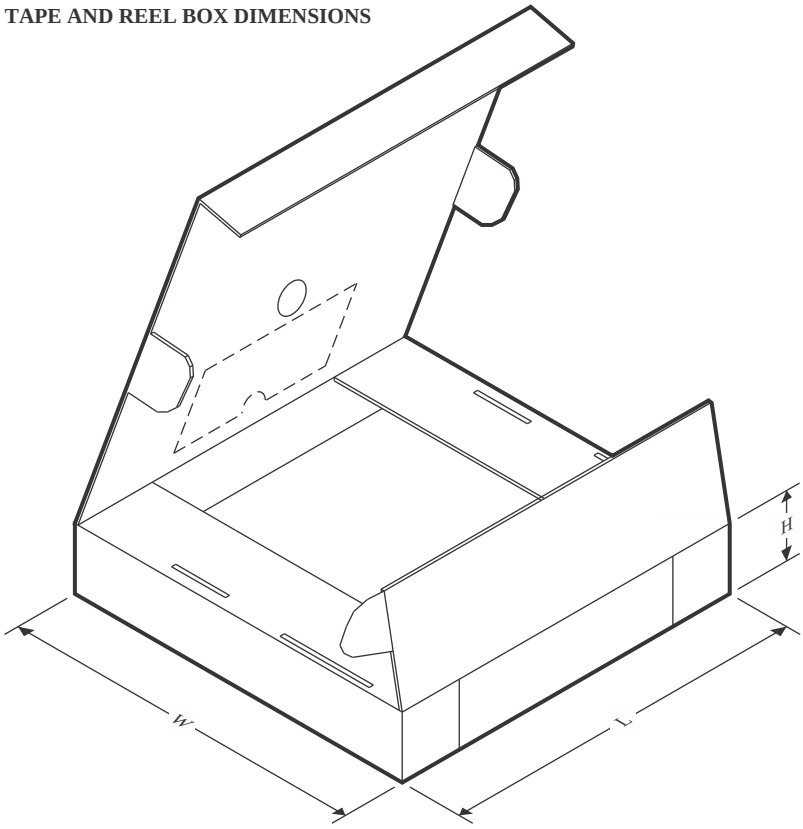

*All dimensions are nominal

Device	Package Type	Package Drawing	Pins	SPQ	Length (mm)	Width (mm)	Height (mm)
TXS02612RTWR	WQFN	RTW	24	3000	353.0	353.0	32.0
TXS02612RTWRG4	WQFN	RTW	24	3000	353.0	353.0	32.0

GENERIC PACKAGE VIEW

RTW 24

WQFN - 0.8 mm max height

4 x 4, 0.5 mm pitch

PLASTIC QUAD FLATPACK - NO LEAD

This image is a representation of the package family, actual package may vary.
Refer to the product data sheet for package details.

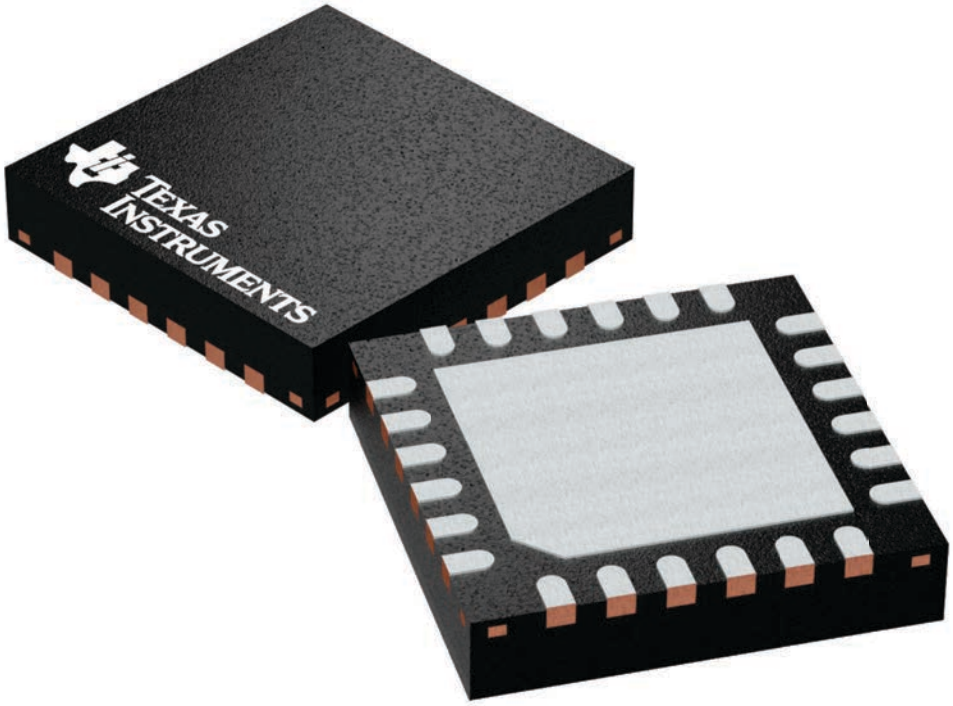

4224801/A

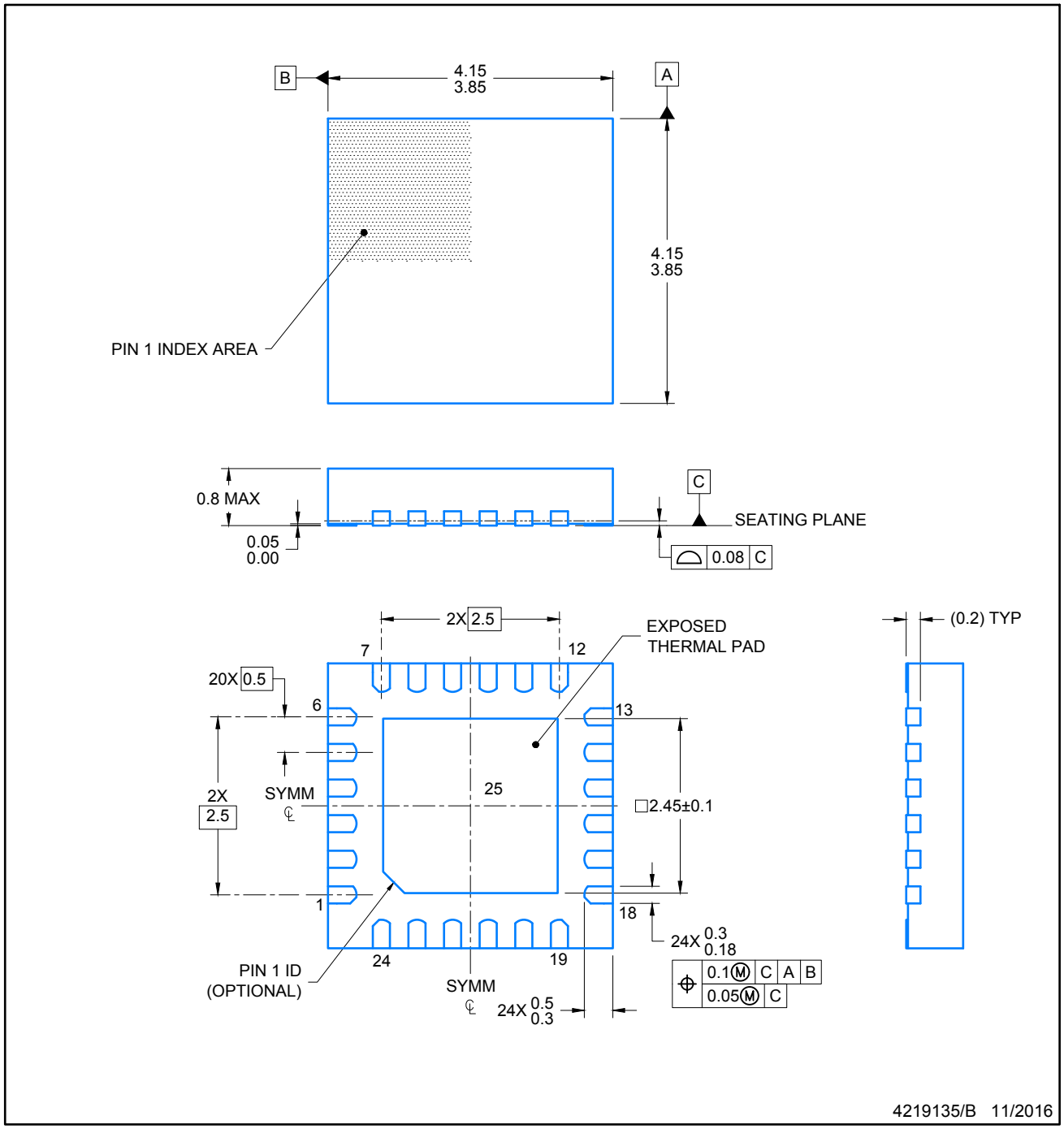

NOTES:

1. All linear dimensions are in millimeters. Any dimensions in parenthesis are for reference only. Dimensioning and tolerancing per ASME Y14.5M.
2. This drawing is subject to change without notice.

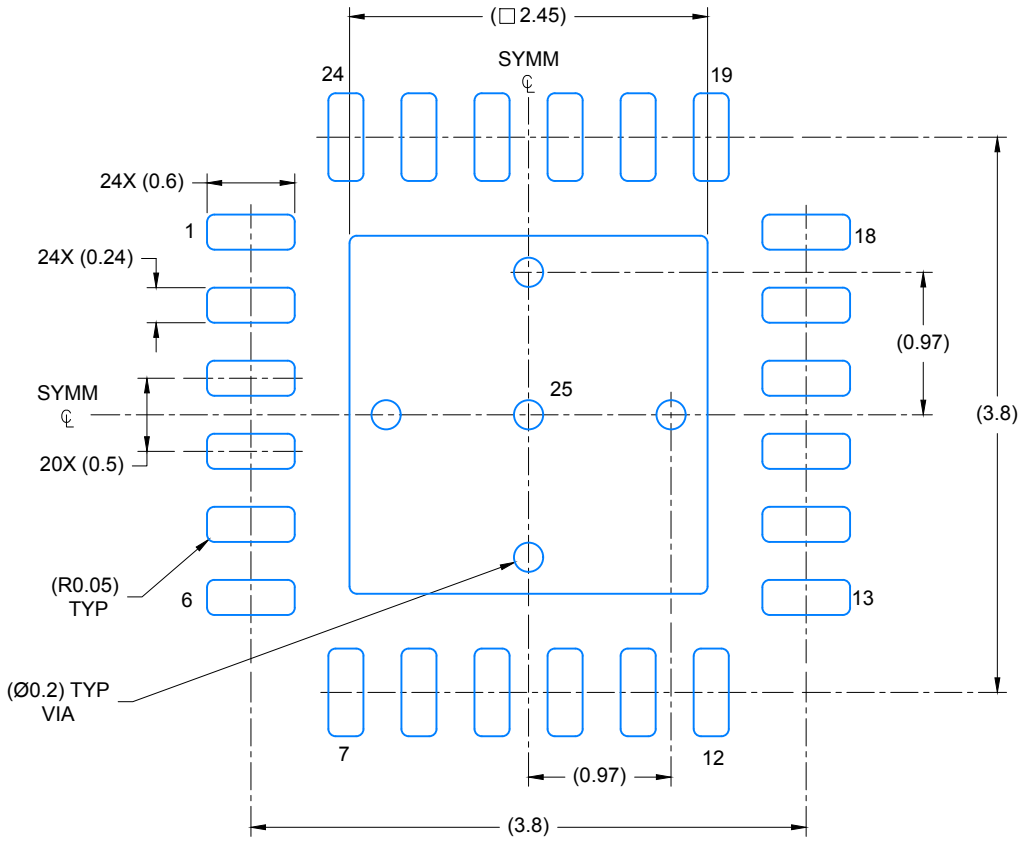

LAND PATTERN EXAMPLE

SCALE: 20X

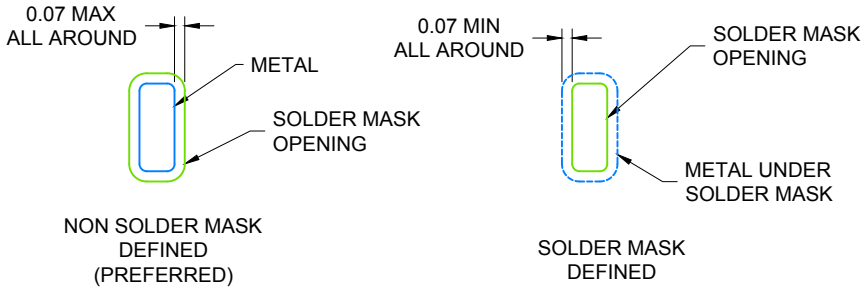

SOLDER MASK DETAILS

4219135/B 11/2016

NOTES: (continued)

3. For more information, see Texas Instruments literature number SLUA271 (www.ti.com/lit/slua271).

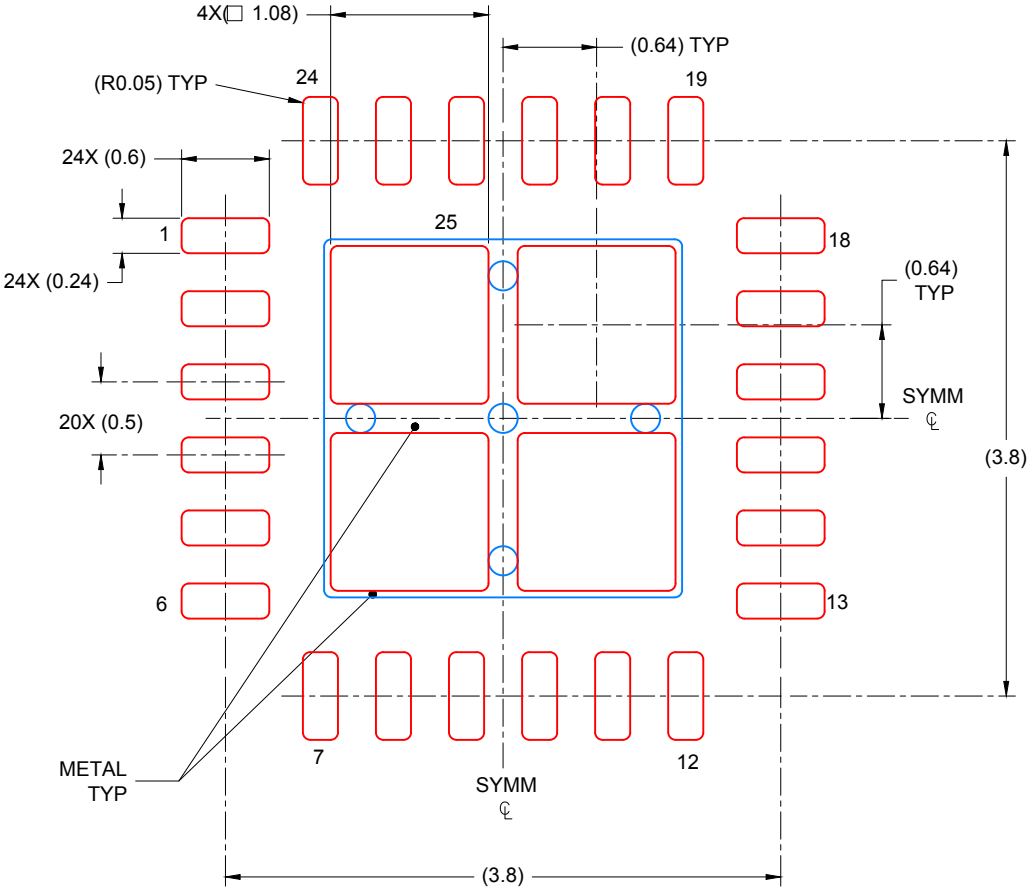

SOLDER PASTE EXAMPLE
BASED ON 0.125 mm THICK STENCIL

EXPOSED PAD 25:
78% PRINTED COVERAGE BY AREA UNDER PACKAGE
SCALE: 20X

4219135/B 11/2016

NOTES: (continued)

4. Laser cutting apertures with trapezoidal walls and rounded corners may offer better paste release. IPC-7525 may have alternate design recommendations.

IMPORTANT NOTICE AND DISCLAIMER

TI PROVIDES TECHNICAL AND RELIABILITY DATA (INCLUDING DATASHEETS), DESIGN RESOURCES (INCLUDING REFERENCE DESIGNS), APPLICATION OR OTHER DESIGN ADVICE, WEB TOOLS, SAFETY INFORMATION, AND OTHER RESOURCES “AS IS” AND WITH ALL FAULTS, AND DISCLAIMS ALL WARRANTIES, EXPRESS AND IMPLIED, INCLUDING WITHOUT LIMITATION ANY IMPLIED WARRANTIES OF MERCHANTABILITY, FITNESS FOR A PARTICULAR PURPOSE OR NON-INFRINGEMENT OF THIRD PARTY INTELLECTUAL PROPERTY RIGHTS.

These resources are intended for skilled developers designing with TI products. You are solely responsible for (1) selecting the appropriate TI products for your application, (2) designing, validating and testing your application, and (3) ensuring your application meets applicable standards, and any other safety, security, regulatory or other requirements.

These resources are subject to change without notice. TI grants you permission to use these resources only for development of an application that uses the TI products described in the resource. Other reproduction and display of these resources is prohibited. No license is granted to any other TI intellectual property right or to any third party intellectual property right. TI disclaims responsibility for, and you fully indemnify TI and its representatives against any claims, damages, costs, losses, and liabilities arising out of your use of these resources.

TI’s products are provided subject to TI’s Terms of Sale, TI’s General Quality Guidelines, or other applicable terms available either on ti.com or provided in conjunction with such TI products. TI’s provision of these resources does not expand or otherwise alter TI’s applicable warranties or warranty disclaimers for TI products. Unless TI explicitly designates a product as custom or customer-specified, TI products are standard, catalog, general purpose devices.

TI objects to and rejects any additional or different terms you may propose.

Copyright © 2025, Texas Instruments Incorporated

Last updated 10/2025