TPS3760 具有可编程检测和复位延迟功能的高电压监控器

1 特性

- 提供功能安全
  - 有助于进行功能安全系统设计的文档
- 宽电源电压范围：2.7V 至 65V
- SENSE 和 RESET 引脚为 65V 等级
- 低静态电流：1 μA（典型值）
- 灵活而广泛的电压阈值选项
  表 12-1
  - 2.7V 至 36V（最高精度 1.5%）
  - 800 mV 选项（最高精度 1%）
- 内置迟滞 (V_{HYS})
  - 百分比选项：2% 至 13%（阶跃 1%）
  - 固定选项：V_{TH} < 8V = 0.5V、1V、1.5V、2V、2.5V
- 可编程复位延时时间
  - 10nF = 12.8ms、10μF = 12.8s
- 可编程感测延时时间
  - 10nF = 1.28ms、10μF = 1.28s
- 手动复位 ($\overline{MR}$) 特性
- 输出复位锁存特性
- 输出拓扑：开漏或推挽

2 应用

- 模拟输入模块
- CPU（PLC 控制器）
- 伺服驱动器控制模块
- 伺服驱动器功率级模块
- 伺服驱动器功能安全模块
- HVAL 阀门和执行器控制

3 说明

TPS3760 是具有宽输入范围和低静态电流的窗口监控器系列，用于快速检测过压 (OV) 或欠压 (UV) 情况。TPS3760 可以直接连接到各种工业应用中的 12V/24V 电源轨并对其进行监控，这些应用包括工厂自动化、电机驱动器、楼宇自动化等。SENSE 引脚上的内置迟滞特性有助于在监测电源电压轨时防止出现错误的复位信号。

通过单独的 VDD 和 SENSE 引脚，可实现高可靠性系统所需的冗余。SENSE 已从 VDD 去耦，可以监控高于和低于 VDD 的电压。SENSE 引脚的高阻抗输入支持使用可选的外部电阻器。通过 CTSx 和 CTRx 引脚，可以对 RESET 信号的上升沿和下降沿进行延迟调整。此外，CTSx 可忽略受监控电压轨上产生的电压干扰，从而充当去抖动器；CTRx 具有手动复位 ($\overline{MR}$) 的作用，可用于强制系统复位。

TPS3760 采用 4.1mm × 1.9mm 14 引脚 SOT 封装。TPS3760 工作温度范围为 –40°C 至 +125°C T_A。

器件信息

器件型号	封装 (1)	封装尺寸（标称值）
TPS3760	SOT-23 (14) (DYY)	4.1 mm × 1.9 mm

(1) 如需了解封装详细信息，请参阅数据表末尾的机械制图附录。

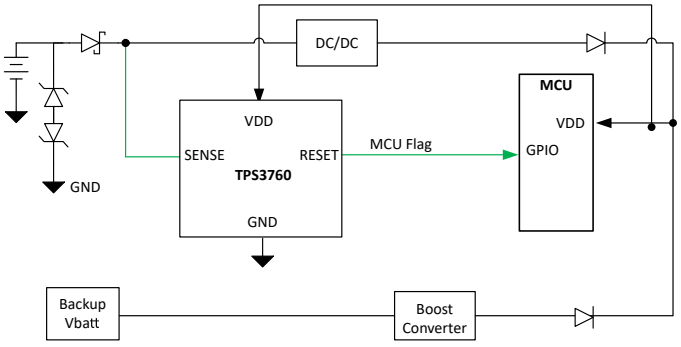

典型应用电路

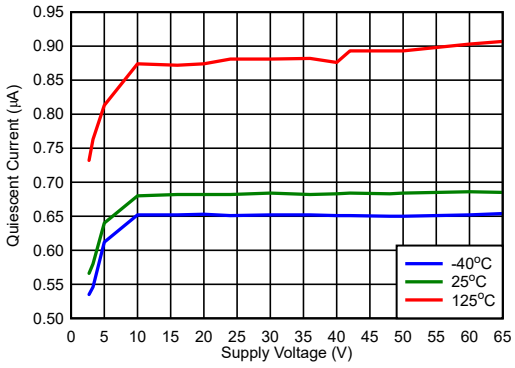

典型 I_{DD} 与 V_{DD}

本文档旨在为方便起见，提供有关 TI 产品中文版本的信息，以确认产品的概要。有关适用的官方英文版本的最新信息，请访问 www.ti.com，其内容始终优先。TI 不保证翻译的准确性和有效性。在实际设计之前，请务必参考最新版本的英文版本。

Table of Contents

1 特性.... 1
2 应用.... 1
3 说明.... 1
4 Revision History.... 2
5 Device Comparison.... 3
6 Pin Configuration and Functions.... 4
7 Specifications.... 6
7.1 Absolute Maximum Ratings.... 6
7.2 ESD Ratings.... 6
7.3 Recommended Operating Conditions.... 6
7.4 Thermal Information.... 6
7.5 Electrical Characteristics.... 7
7.6 Timing Requirements.... 9
7.7 Timing Diagrams.... 10
7.8 Typical Characteristics.... 13
8 Detailed Description.... 17
8.1 Overview.... 17
8.2 Functional Block Diagram.... 17
8.3 Feature Description.... 18
8.4 Device Functional Modes.... 27
9 Application and Implementation.... 28
9.1 Application Information.... 28
9.2 Adjustable Voltage Thresholds.... 28
9.3 Typical Application.... 29
10 Power Supply Recommendations.... 32
10.1 Power Dissipation and Device Operation.... 32
11 Layout.... 33
11.1 Layout Guidelines.... 33
11.2 Layout Example.... 33
11.3 Creepage Distance.... 34
12 Device and Documentation Support.... 35
12.1 Device Nomenclature.... 35
12.2 接收文档更新通知.... 36
12.3 支持资源.... 36
12.4 Trademarks.... 36
12.5 静电放电警告.... 36
12.6 术语表.... 36
13 Mechanical, Packaging, and Orderable Information.... 36

4 Revision History

注：以前版本的页码可能与当前版本的页码不同

Changes from Revision * (March 2022) to Revision A (September 2023)	Page
• Added Latch nomenclature	3
• Removed DSK pinout description	4
• Added CTS and CTR timing plots	13
• Added Reset latch mode information	26
• Fixed nomenclature 08 to 01	35

Copyright © 2023 Texas Instruments Incorporated

5 Device Comparison

Voltage Threshold Hysteresis

TPS3760 X X XX X DYY R

Topology

Suffix	CH1
A	UV OD L
B	UV PP L
C	UV OD H
D	UV PP H
E	OV OD L
F	OV PP L
G	OV OD H
H	OV PP H

LATCH

Suffix	Name
L	LATCH
Blank	NO LATCH

Threshold Voltage

100mV steps				400mV steps		500mV steps		1V steps	
Suffix	VIT	Suffix	VIT	Suffix	VIT	Suffix	VIT	Suffix	VIT
01	800mV	70	7.0V	A0	10.4V	D0	20.5V	F0	31.0V
27	2.7V	71	7.1V	A1	10.8V	D1	21.0V	F1	32.0V
28	2.8V	72	7.2V	A2	11.2V	D2	21.5V	F2	33.0V
29	2.9V	73	7.3V	A3	11.6V	D3	22.0V	F3	34.0V
30	3.0V	74	7.4V	A4	12.0V	D4	22.5V	F4	35.0V
31	3.1V	75	7.5V	A5	12.4V	D5	23.0V	F5	36.0V
32	3.2V	76	7.6V	A6	12.8V	D6	23.5V		
33	3.3V	77	7.7V	A7	13.2V	D7	24.0V		
34	3.4V	78	7.8V	A8	13.6V	D8	24.5V		
35	3.5V	79	7.9V	A9	14.0V	D9	25.0V		
36	3.6V	80	8.0V	B0	14.4V	E0	25.5V		
37	3.7V	81	8.1V	B1	14.8V	E1	26.0V		
38	3.8V	82	8.2V	B2	15.2V	E2	26.5V		
39	3.9V	83	8.3V	B3	15.6V	E3	27.0V		
40	4.0V	84	8.4V	B4	16.0V	E4	27.5V		
41	4.1V	85	8.5V	B5	16.4V	E5	28.0V		
42	4.2V	86	8.6V	B6	16.8V	E6	28.5V		
43	4.3V	87	8.7V	B7	17.2V	E7	29.0V		
44	4.4V	88	8.8V	B8	17.6V	E8	29.5V		
45	4.5V	89	8.9V	B9	18.0V	E9	30.0V		
46	4.6V	90	9.0V	C0	18.4V				
47	4.7V	91	9.1V	C1	18.8V				
48	4.8V	92	9.2V	C2	19.2V				
49	4.9V	93	9.3V	C3	19.6V				
50	5.0V	94	9.4V	C4	20.0V				
51	5.1V	95	9.5V						
52	5.2V	96	9.6V						
53	5.3V	97	9.7V						
54	5.4V	98	9.8V						
55	5.5V	99	9.9V						
56	5.6V	00	10.0V						
57	5.7V								
58	5.8V								
59	5.9V								
60	6.0V								
61	6.1V								
62	6.2V								
63	6.3V								
64	6.4V								
65	6.5V								
66	6.6V								
67	6.7V								
68	6.8V								
69	6.9V								

Hysteresis

Suffix	CH1
2	2%
3	3%
4	4%
5	5%
6	6%
7	7%
8	8%
9	9%
A	10%
B	11%
C	12%
D	13%
E	0.5V
F	1V
G	1.5V
H	2V
I	2.5V

Package

Suffix	Name
DYY	SOT-23

Reel

Suffix	Name
R	Large

1. Sense logic: OV = overvoltage; UV = undervoltage
2. Reset topology: PP = Push-Pull; OD = Open-Drain
3. Reset logic: L = Active-Low; H = Active-High
4. A to I hysteresis options are only available for 2.9 V to 8V threshold options
5. Suffix 01 with VIT of 800mV corresponds to the adjustable variant, does not have internal voltage divider

6 Pin Configuration and Functions

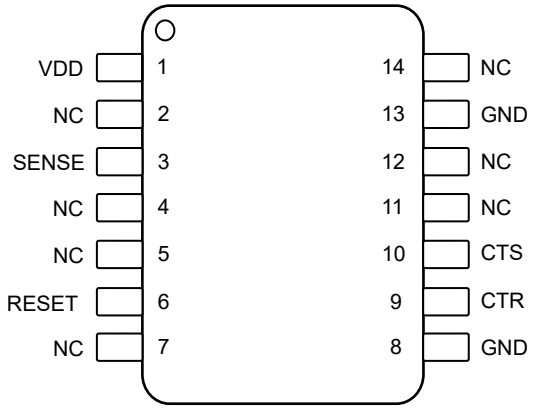

图 6-1. DYY Package, 14-Pin SOT-23, TPS3760 (Top View)

表 6-1. Pin Functions

PIN	SOT23 (DYY)	I/O	DESCRIPTION
NAME	NO.		
VDD	1	I	**Input Supply Voltage:** Bypass with a 0.1 µF capacitor to GND.
SENSE	3	I	**Sense Voltage:** The voltage monitored by this pin is compared to the internal voltage threshold, V_{th}, that is determined by an internal voltage divider for fixed variants or an external voltage divider for adjustable variants. When the SENSE pin detects a fault, $\overline{\text{RESET}}$/RESET asserts after the sense time delay, set by CTS. When the voltage on the SENSE pin transitions back past V_{th} and hysteresis, V_{HYS}, $\overline{\text{RESET}}$/RESET deasserts after the reset time delay, set by CTR. For noisy applications, placing a 10 nF to 100 nF ceramic capacitor close to this pin may be needed for optimum performance. Sensing Topology: **Overvoltage (OV) or Undervoltage (UV)**
$\overline{\text{RESET}}$/RESET	6	O	**Output Reset Signal:** See Device Comparison for output topology options. $\overline{\text{RESET}}$/RESET asserts when SENSE crosses the voltage threshold after the sense time delay, set by CTS. $\overline{\text{RESET}}$/RESET remains asserted for the reset time delay period after SENSE transitions out of a fault condition. For active low open-drain reset output, an external pullup resistor is required. Do not place external pullup resistors on push-pull outputs. Output topology: **Open Drain or Push Pull, Active Low or Active High**
CTS /$\overline{\text{LATCH}}$	10	O	**SENSE Time Delay:** Capacitor programmable sense delay: CTS pin offers a user-adjustable sense delay time when asserting a reset condition. Connecting this pin to a ground-referenced capacitor sets the $\overline{\text{RESET}}$/RESET delay time to assert. **$\overline{\text{LATCH}}$:** CTS functionality is disabled in latch capable devices. When latch mode is activated, $\overline{\text{RESET}}$/RESET will not de-assert even if the fault is cleared. To activate latch mode, the $\overline{\text{LATCH}}$ pin has to be driven low, to at least 1.4V. It is recommended to have a 10kΩ pull-down to ground. To deactivate latch mode, a 2.1V or greater for 3µs has to be applied to the $\overline{\text{LATCH}}$ pin while SENSE pin is not detecting a fault. $\overline{\text{RESET}}$/RESET will de-assert with delay t_{ctr} starting on the rising edge of the deactivating signal.
CTR /$\overline{\text{MR}}$	9	-	**RESET Time Delay:** User-programmable reset time delay for $\overline{\text{RESET}}$/RESET. Connect an external capacitor for adjustable time delay or leave the pin floating for the shortest delay. **Manual Reset:** If this pin is driven low, the $\overline{\text{RESET}}$/RESET output will reset and become asserted. The pin can be left floating or be connected to a capacitor. This pin should not be driven high.
GND	8, 13	-	**Ground.** All GND pins must be electrically connected to the board ground.

Copyright © 2023 Texas Instruments Incorporated

表 6-1. Pin Functions (continued)

PIN		I/O	DESCRIPTION
NAME	SOT23 (DYY) NO.		
NC	2, 4, 5, 7, 11,12, 14	-	NC stands for “No Connect.” The pins are to be left floating.

7 Specifications

7.1 Absolute Maximum Ratings

over operating free-air temperature range, unless otherwise noted [1]

		MIN	MAX	UNIT
Voltage	VDD, V_{SENSE}, V_{RESET}, $V_{\overline{RESET}}$	–0.3	70	V
Voltage	V_{CTS}, V_{CTR}	–0.3	6	V
Current	I_{RESET}, $I_{\overline{RESET}}$		10	mA
Temperature [2]	Operating junction temperature, T_J	–40	150	°C
Temperature [2]	Operating Ambient temperature, T_A	–40	150	°C
Temperature [2]	Storage, T_{stg}	–65	150	°C

(1) Stresses beyond those listed under Absolute Maximum Ratings may cause permanent damage to the device. These are stress ratings only, which do not imply functional operation of the device at these or any other conditions beyond those indicated under Recommended Operating Conditions. Exposure to absolute-maximum-rated conditions for extended periods may affect device reliability.
(2) As a result of the low dissipated power in this device, it is assumed that $T_J = T_A$.

7.2 ESD Ratings

			VALUE	UNIT
$V_{(ESD)}$	Electrostatic discharge	Human body model (HBM), per ANSI/ESDA/JEDEC JS-002 [1]	±2000	V
		Charged device model (CDM), per JEDEC specification JESD22-C101 [2]	±750	

(1) JEDEC document JEP155 states that 500-V HBM allows safe manufacturing with a standard ESD control process.
(2) JEDEC document JEP157 states that 250-V CDM allows safe manufacturing with a standard ESD control process.

7.3 Recommended Operating Conditions

over operating free-air temperature range (unless otherwise noted)

		MIN	NOM	MAX	UNIT
Voltage	V_{DD}	2.7		65	V
Voltage	V_{SENSE}, V_{RESET}, $V_{\overline{RESET}}$	0		65	V
Voltage	V_{CTS}, V_{CTR}	0		5.5	V
Current	I_{RESET}, $I_{\overline{RESET}}$	0		±5	mA
T_J	Junction temperature (free air temperature)	–40		125	°C

7.4 Thermal Information

THERMAL METRIC [1]		TPS3760 DYY 14-PIN	UNIT
$R_{\theta JA}$	Junction-to-ambient thermal resistance	131.5	°C/W
$R_{\theta JC(top)}$	Junction-to-case (top) thermal resistance	61.1	°C/W
$R_{\theta JB}$	Junction-to-board thermal resistance	56.6	°C/W
ψ_{JT}	Junction-to-top characterization parameter	3.4	°C/W
ψ_{JB}	Junction-to-board characterization parameter	56.5	°C/W
$R_{\theta JC(bot)}$	Junction-to-case (bottom) thermal resistance	N/A	°C/W

(1) For more information about traditional and new thermal metrics, see the Semiconductor and IC Package Thermal Metrics application report.

Copyright © 2023 Texas Instruments Incorporated

7.5 Electrical Characteristics

At $V_{DD(MIN)} \le V_{DD} \le V_{DD\ (MAX)}$, CTR/$\overline{MR}$ = CTS = open, output reset pull-up resistor R_{PU} = 10 kΩ, voltage V_{PU} = 5.5 V, and load C_{LOAD} = 10 pF. The operating free-air temperature range T_A = – 40°C to 125°C, unless otherwise noted. Typical values are at T_A = 25°C and VDD = 16 V and V_{IT} = 6.5 V (V_{IT} refers to V_{ITN} or V_{ITP}).

PARAMETER		TEST CONDITIONS	MIN	TYP	MAX	UNIT
VDD						
V_{DD}	Supply Voltage		2.7		65	V
UVLO [1]	Under Voltage Lockout	V_{DD} Falling below $V_{DD\ (MIN)}$			2.7	V
V_{POR}	Power on Reset Voltage [2] $\overline{RESET}$, Active Low (Open-Drain, Push-Pull)	$V_{OL(MAX)}$ = 300 mV $I_{OUT\ (Sink)}$ = 15 µA			1.4	V
V_{POR}	Power on Reset Voltage [2] RESET, Active High (Push-Pull)	$V_{OH(MIN)}$ = 0.8 x V_{DD} $I_{OUT\ (Source)}$ = 15 µA			1.4	V
I_{DD}	Supply current into VDD pin	V_{IT} = 800 mV $V_{DD\ (MIN)} \le V_{DD} \le V_{DD\ (MAX)}$		1	2.6	µA
		V_{IT} = 2.7 V to 36 V $V_{DD\ (MIN)} \le V_{DD} \le V_{DD\ (MAX)}$		1	2	µA
SENSE (Input)						
I_{SENSE}	Input current	V_{IT} = 800 mV			100	nA
I_{SENSE}	Input current	V_{IT} < 10 V			0.8	µA
I_{SENSE}	Input current	10 V < V_{IT} < 26 V			1.2	µA
I_{SENSE}	Input current	V_{IT} > 26 V			2	µA
V_{ITN}	Input Threshold Negative (Undervoltage)	V_{IT} = 2.7 V to 36 V	-1.5		1.5	%
		V_{IT} = 800 mV [3]	0.792	0.800	0.808	V
V_{ITP}	Input Threshold Positive (Overvoltage)	V_{IT} = 2.7 V to 36 V	-1.5		1.5	%
		V_{IT} = 800 mV [3]	0.792	0.800	0.808	V
V_{HYS}	Hysteresis Accuracy [4]	V_{IT} = 0.8 V and 2.7 V to 36 V V_{HYS} Range = 2% to 13% (1% step)	-1.5		1.5	%
		V_{IT} = 2.7 V to 8 V V_{HYS} = 0.5 V, 1 V, 1.5 V, 2 V, 2.5 V (V_{ITP} - V_{HYS}) ≥ 2.4 V, OV Only	-1.5		1.5	%
RESET (Output)						
$I_{lkg(OD)}$	Open-Drain leakage	V_{RESET} = 5.5 V V_{ITN} < V_{SENSE} < V_{ITP}			300	nA
		V_{RESET} = 65 V V_{ITN} < V_{SENSE} < V_{ITP}			300	nA
V_{OL} [5]	Low level output voltage	2.7 V ≤ VDD ≤ 65 V I_{RESET} = 5 mA			300	mV
V_{OH_DO}	High level output voltage dropout (V_{DD} - V_{OH} = V_{OH_DO}) (Push-Pull only)	2.7 V ≤ VDD ≤ 65 V I_{RESET} = 500 uA			100	mV
V_{OH} [5]	High level output voltage (Push-Pull only)	2.7 V ≤ VDD ≤ 65 V I_{RESET} = 5 mA	0.8V_{DD}			V

7.5 Electrical Characteristics (continued)

At $V_{DD(MIN)} \leq V_{DD} \leq V_{DD\ (MAX)}$, CTR/$\overline{MR}$ = CTS = open, output reset pull-up resistor R_{PU} = 10 kΩ, voltage V_{PU} = 5.5 V, and load C_{LOAD} = 10 pF. The operating free-air temperature range T_A = – 40°C to 125°C, unless otherwise noted. Typical values are at T_A = 25°C and VDD = 16 V and V_{IT} = 6.5 V (V_{IT} refers to V_{ITN} or V_{ITP}).

PARAMETER		TEST CONDITIONS	MIN	TYP	MAX	UNIT
Capacitor Timing (CTS, CTR)						
R_{CTR}	Internal resistance (CTR / $\overline{MR}$)		877	1000	1147	Kohms
R_{CTS}	Internal resistance (C_{TS})		88	100	122	Kohms
Manual Reset ($\overline{MR}$)						
$V_{\overline{MR}_IH}$	CTR / $\overline{MR}$ pin logic high input	VDD = 2.7 V	2200			mV
$V_{\overline{MR}_IH}$	CTR / $\overline{MR}$ pin logic high input	VDD = 65 V	2500			mV
$V_{\overline{MR}_IL}$	CTR / $\overline{MR}$ pin logic low input	VDD = 2.7 V			1300	mV
$V_{\overline{MR}_IL}$	CTR / $\overline{MR}$ pin logic low input	VDD = 65 V			1300	mV

(1) When V_{DD} voltage falls below UVLO, reset is asserted for Output. V_{DD} slew rate ≤ 100 mV / µs
(2) V_{POR} is the minimum V_{DD} voltage for a controlled output state. Below VPOR, the output cannot be determined. V_{DD} dv/dt ≤ 100mV/µs
(3) For adjustable voltage guidelines and resistor selection refer to **Adjustable Voltage Thresholds** in **Application and Implementation section**
(4) Hysteresis is with respect to V_{ITP} and V_{ITN} voltage threshold. V_{ITP} has negative hysteresis and V_{ITN} has positive hysteresis.
(5) For V_{OH} and V_{OL} relation to output variants refer to **Timing Figures after the Timing Requirement Table**

Copyright © 2023 Texas Instruments Incorporated

7.6 Timing Requirements

At $V_{DD(MIN)} \leq V_{DD} \leq V_{DD\ (MAX)}$, CTR/$\overline{MR}$ = CTS = open [(1)], output reset pull-up resistor R_{PU} = 10 kΩ, voltage V_{PU} = 5.5V, and C_{LOAD} = 10 pF. VDD and SENSE slew rate = 1V / µs. The operating free-air temperature range T_A = – 40°C to 125°C, unless otherwise noted. Typical values are at T_A = 25°C and VDD = 16 V and V_{IT} = 6.5 V (V_{IT} refers to either V_{ITN} or V_{ITP}).

PARAMETER		TEST CONDITIONS	MIN	TYP	MAX	UNIT
Common timing parameters						
t_{CTR}	Reset release time delay (CTR/$\overline{MR}$) [(2)]	VIT = 2.7 V to 36 V C_{CTR} = Open 20% Overdrive from Hysteresis			100	µs
		VIT = 800 mV C_{CTR} = Open 20% Overdrive from Hysteresis			40	µs
t_{CTS}	Sense detect time delay (CTS) [(3)]	VIT = 2.7 V to 36 V C_{CTS} = Open 20% Overdrive from V_{IT}		34	90	µs
		VIT = 800 mV C_{CTS} = Open 20% Overdrive from V_{IT}		8	17	µs
t_{SD}	Startup Delay [(4)]	$C_{CTR/\overline{MR}}$ = Open			2	ms

(1) C_{CTR} = Reset delay channel
C_{CTS} = Sense delay channel

(2) **CTR Reset detect time delay:**
Overvoltage active-LOW output is measure from $V_{ITP\ -\ HYS}$ to V_{OH}
Undervoltage active-LOW output is measure from $V_{ITN\ +\ HYS}$ to V_{OH}
Overvoltage active-HIGH output is measure from $V_{ITP\ -\ HYS}$ to V_{OL}
Undervoltage active-HIGH output is measure from $V_{ITN\ +\ HYS}$ to V_{OL}

(3) **CTS Sense detect time delay:**
Active-low output is measure from V_{IT} to V_{OL} (or V_{Pullup})
Active-high output is measured from V_{IT} to V_{OH}
V_{IT} refers to either V_{ITN} or V_{ITP}

(4) During the power-on sequence, VDD must be at or above $V_{DD\ (MIN)}$ for at least t_{SD} before the output is in the correct state based on V_{SENSE}.
t_{SD} time includes the propagation delay (C_{CTR} = Open). Capaicitor on C_{CTR} will add time to t_{SD}.

7.7 Timing Diagrams

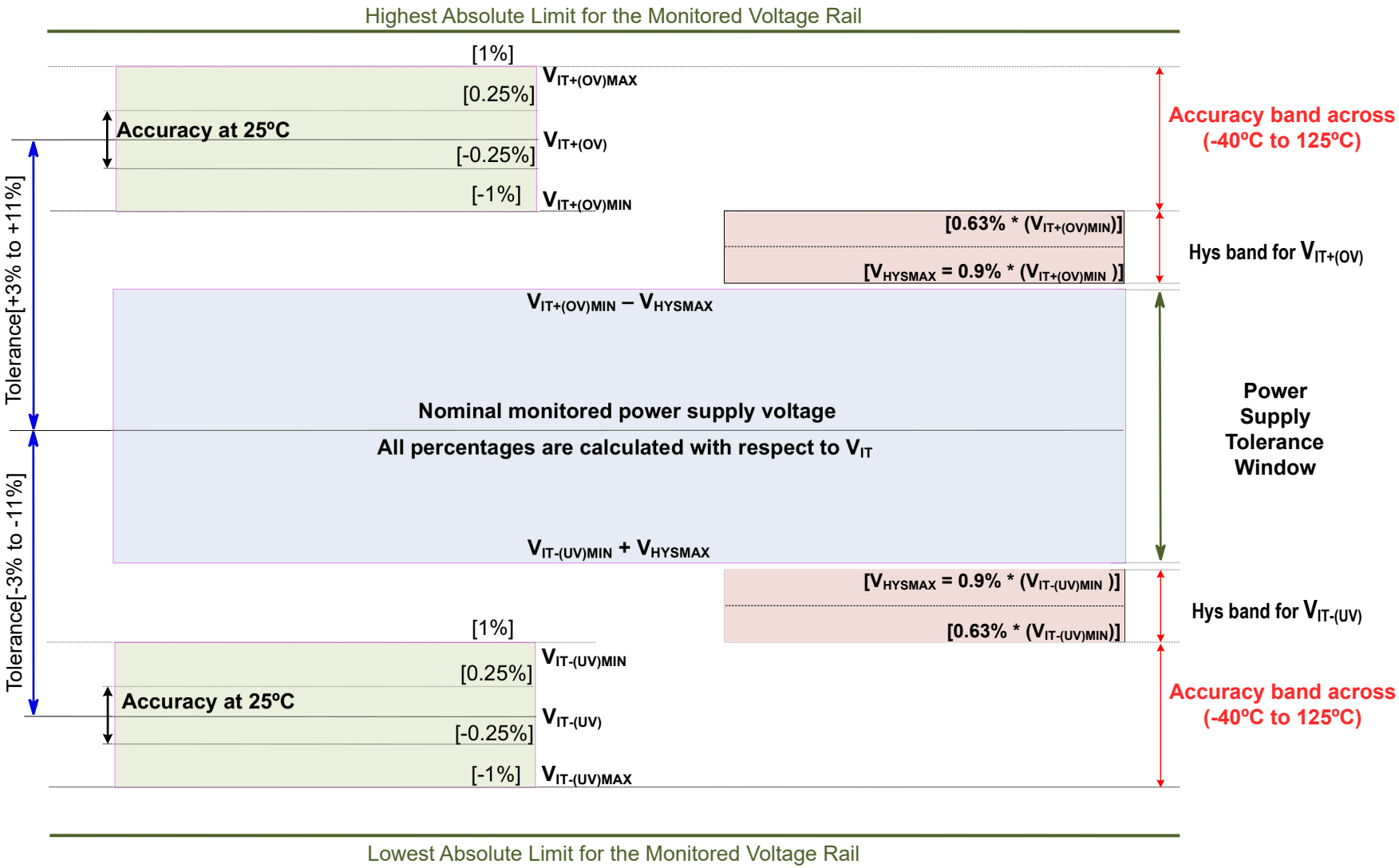

图 7-1. Voltage Threshold and Hysteresis Accuracy

Copyright © 2023 Texas Instruments Incorporated

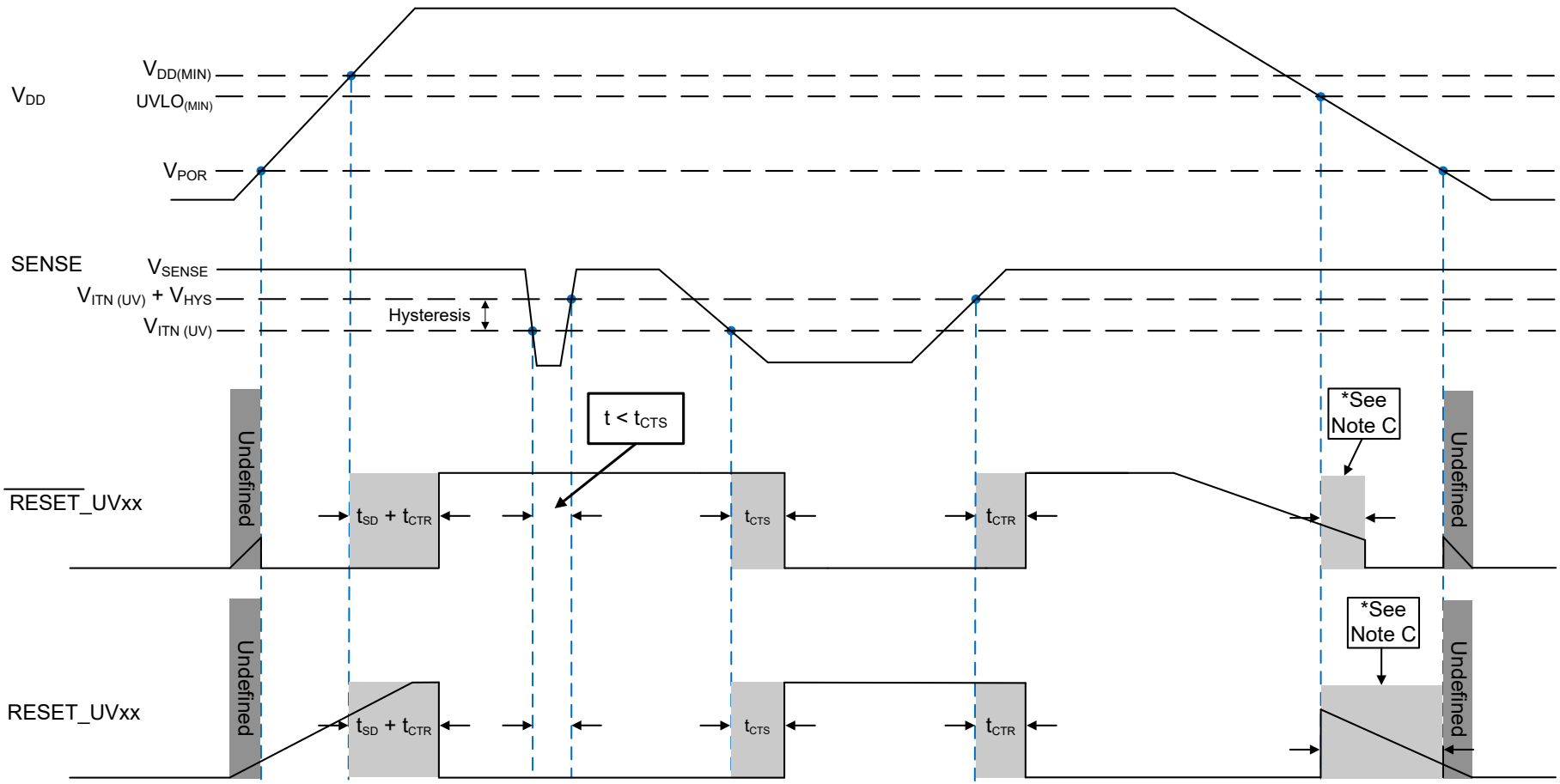

A. For open-drain output option, the timing diagram assumes the $\overline{\text{RESET}}$_UVOD / RESET_UVOD pin is connected via an external pull-up resistor to VDD.

B. Be advised that 图 7-2 shows the VDD falling slew rate is slow or the VDD decay time is much larger than the propagation detect delay (t_{CTR}) time.

C. $\overline{\text{RESET}}$_UVxx / RESET_UVxx is asserted when VDD goes below the $UVLO_{(MIN)}$ threshold after the time delay, t_{CTR}, is reached.

图 7-2. SENSE Undervoltage (UV) Timing Diagram

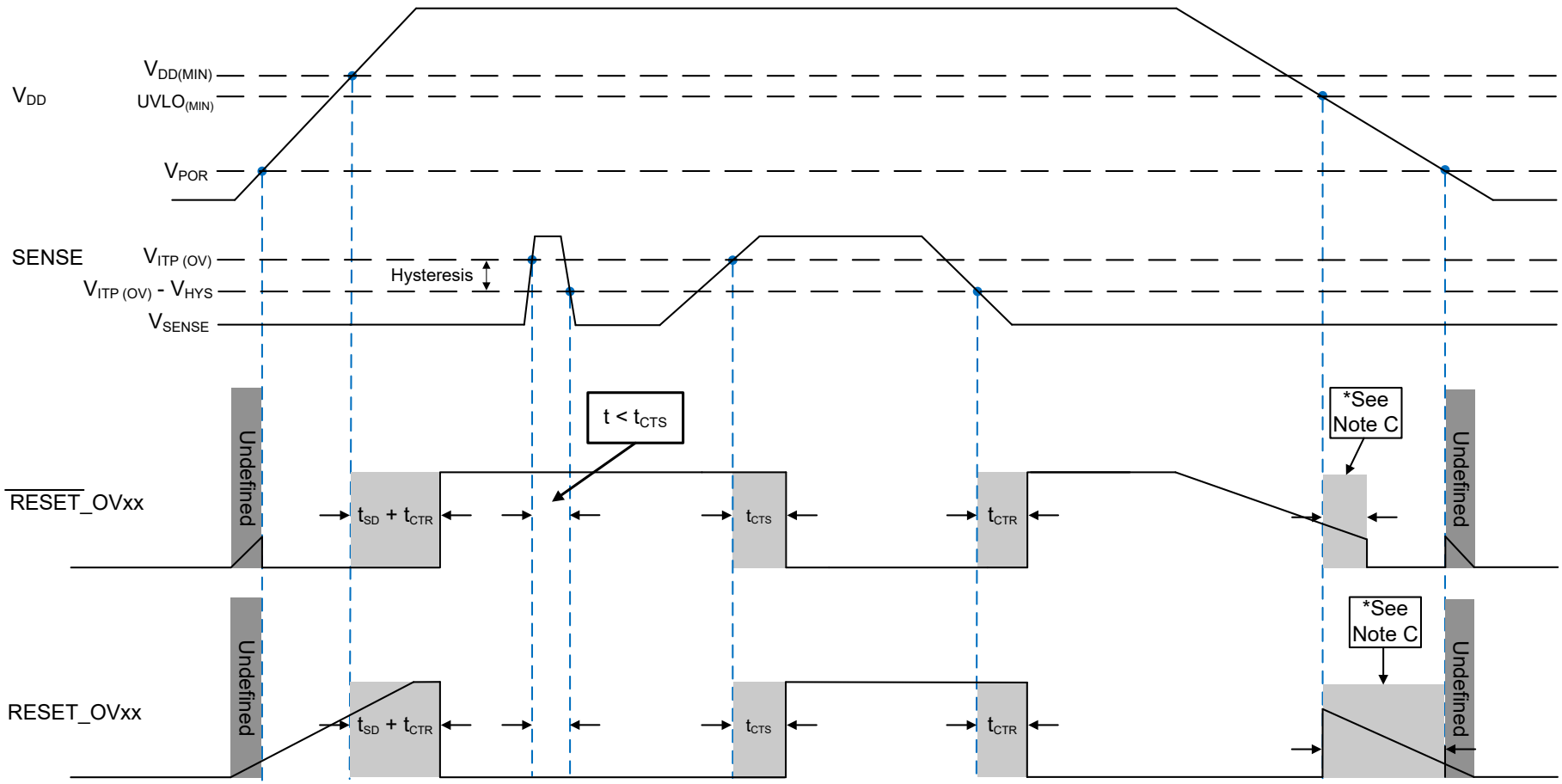

A. For open-drain output option, the timing diagram assumes the $\overline{\text{RESET}}$_OVOD / RESET_OVOD pin is connected via an external pull-up resistor to VDD.
B. Be advised that 图 7-3 shows the VDD falling slew rate is slow or the VDD decay time is much larger than the propagation detect delay (t_{CTR}) time.
C. $\overline{\text{RESET}}$_OVxx / RESET_OVxx is asserted when VDD goes below the $UVLO_{(MIN)}$ threshold after the time delay, t_{CTR}, is reached.

图 7-3. SENSE Overvoltage (OV) Timing Diagram

Copyright © 2023 Texas Instruments Incorporated

7.8 Typical Characteristics

Typical characteristics show the typical performance of the device. Test conditions are T_A = 25°C, R_{PU} = 100 kΩ, C_{Load} = 50 pF, unless otherwise noted.

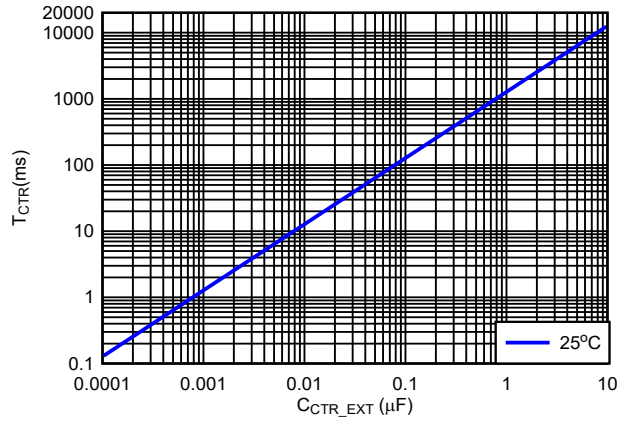

图 7-4. T_{CTR} vs C_{CTR}

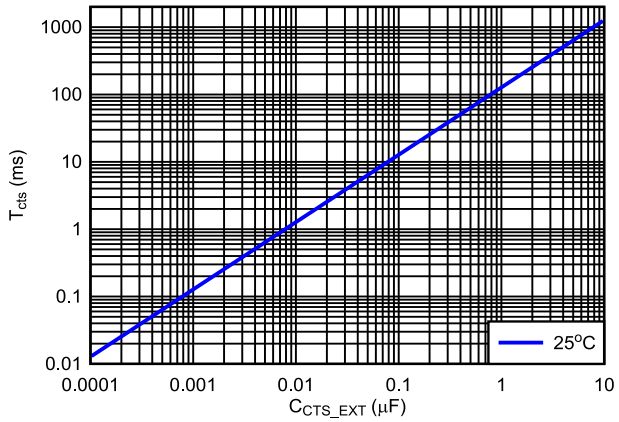

图 7-5. T_{CTS} vs C_{CTS}

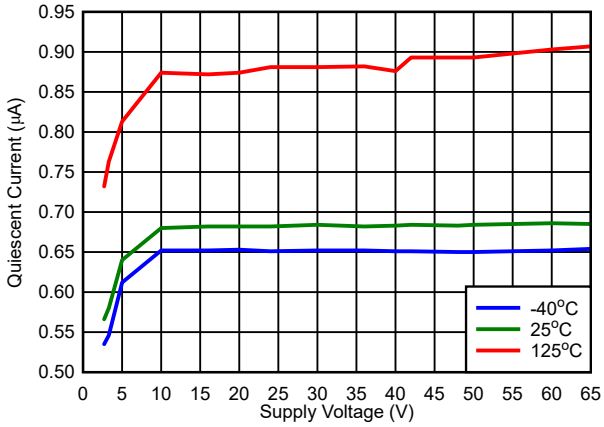

$\overline{RESET}$ = High, V_{IT} = 2.7 V

图 7-6. V_{DD} vs I_{DD} ($\overline{RESET}$ = High, V_{IT} = 2.7 V)

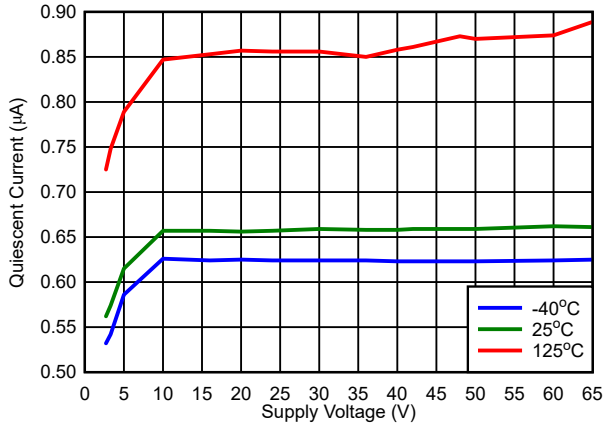

$\overline{RESET}$ = Low, V_{IT} = 2.7 V

图 7-7. V_{DD} vs I_{DD} ($\overline{RESET}$ = Low, V_{IT} = 2.7 V)

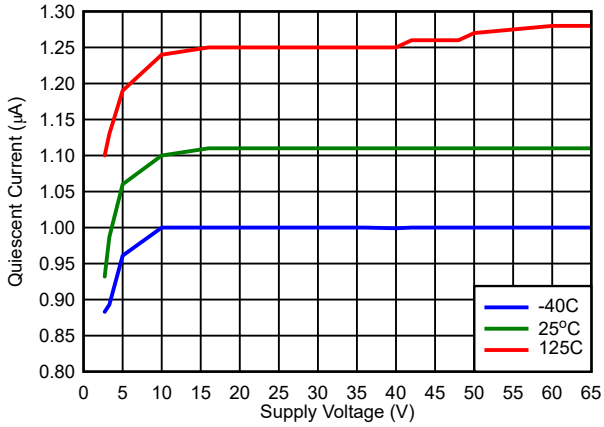

$\overline{RESET}$ = High, V_{IT} = 0.8 V

图 7-8. V_{DD} vs I_{DD} ($\overline{RESET}$ = High, V_{IT} = 0.8 V)

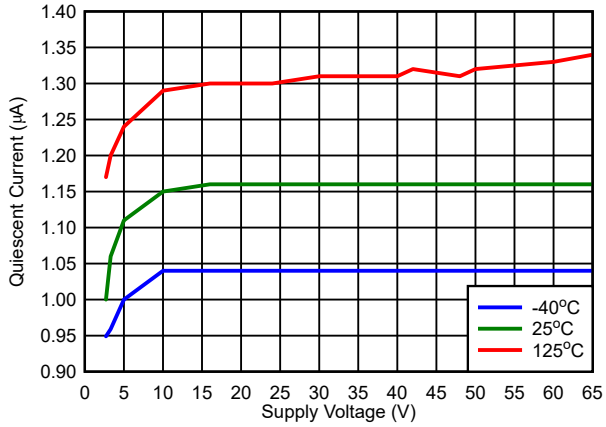

$\overline{RESET}$ = Low, V_{IT} = 0.8 V

图 7-9. V_{DD} vs I_{DD} ($\overline{RESET}$ = Low, V_{IT} = 0.8 V)

7.8 Typical Characteristics (continued)

Typical characteristics show the typical performance of the device. Test conditions are T_A = 25°C, R_{PU} = 100 kΩ, C_{Load} = 50 pF, unless otherwise noted.

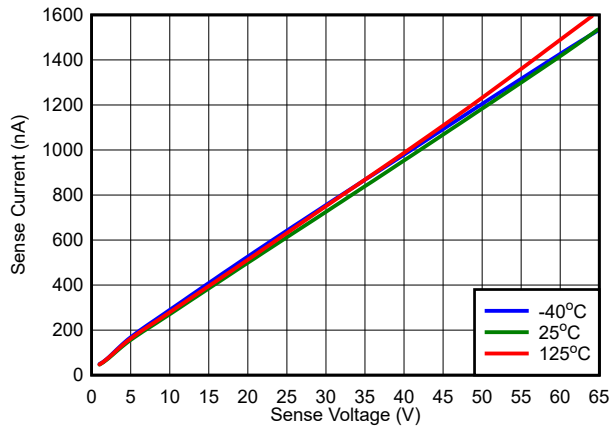

V_{DD} = 2.7 V

图 7-10. V_{SENSE} vs I_{SENSE}

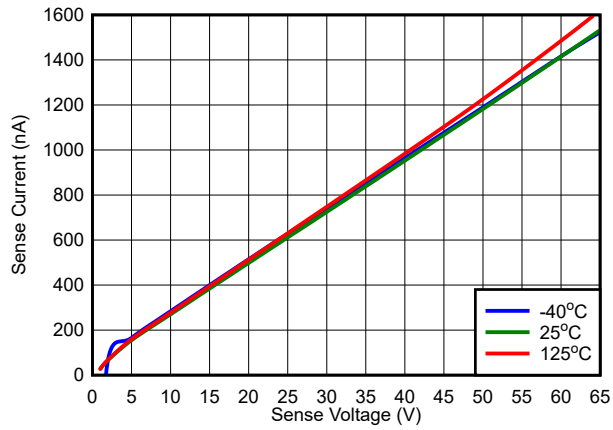

V_{DD} = 65 V

图 7-11. V_{SENSE} vs I_{SENSE}

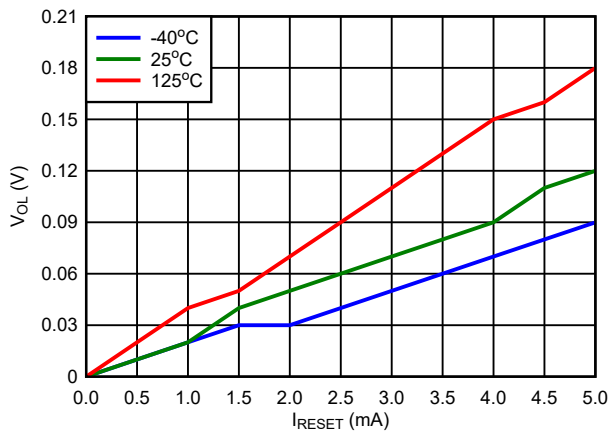

V_{DD} = 2.7 V

图 7-12. Open-Drain Active Low V_{OL} vs I_{RESET}

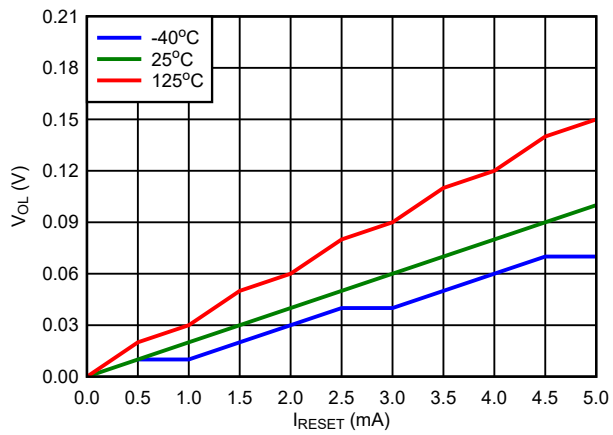

V_{DD} = 65 V

图 7-13. Open-Drain Active Low V_{OL} vs I_{RESET}

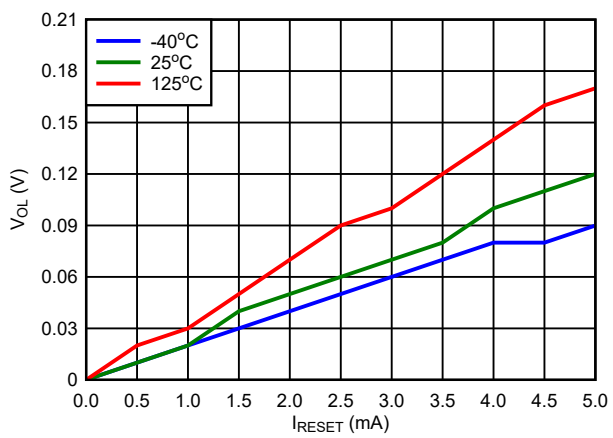

V_{DD} = 2.7 V

图 7-14. Open-Drain Active High V_{OL} vs I_{RESET}

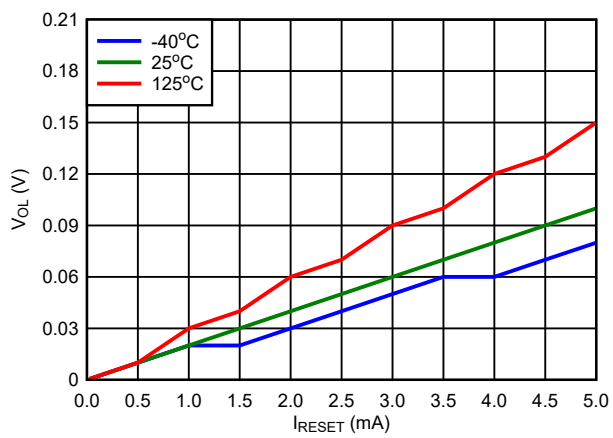

V_{DD} = 65 V

图 7-15. Open-Drain Active High V_{OL} vs I_{RESET}

Copyright © 2023 Texas Instruments Incorporated

7.8 Typical Characteristics (continued)

Typical characteristics show the typical performance of the device. Test conditions are T_A = 25°C, R_{PU} = 100 kΩ, C_{Load} = 50 pF, unless otherwise noted.

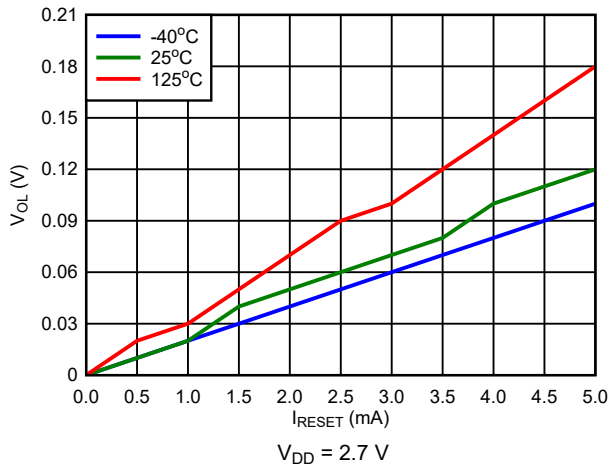

图 7-16. Push-Pull Active High V_{OL} vs I_{RESET}

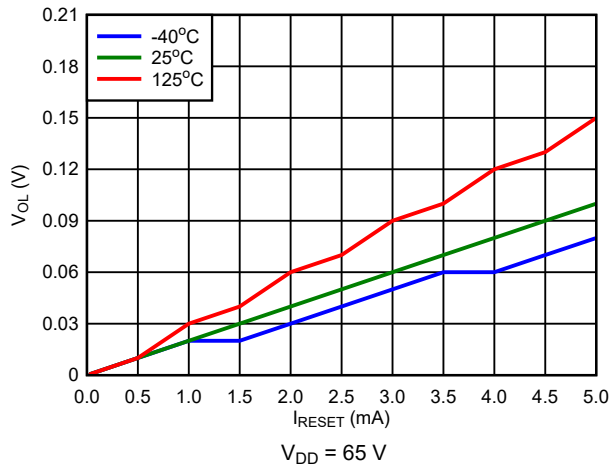

图 7-17. Push-Pull Active High V_{OL} vs I_{RESET}

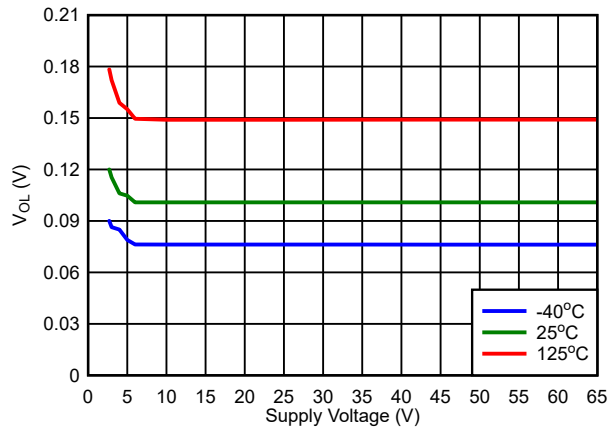

图 7-18. Open-Drain Active Low V_{OL} vs V_{DD}

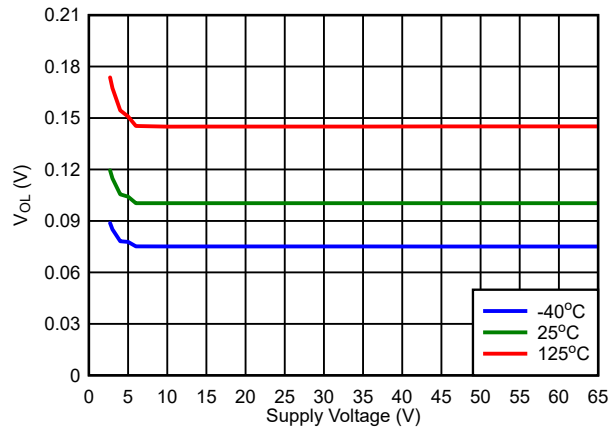

图 7-19. Open-Drain Active High V_{OL} vs V_{DD}

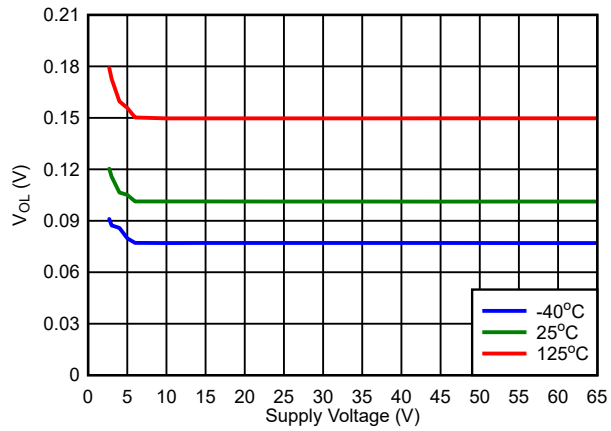

图 7-20. Push-Pull Active Low V_{OL} vs V_{DD}

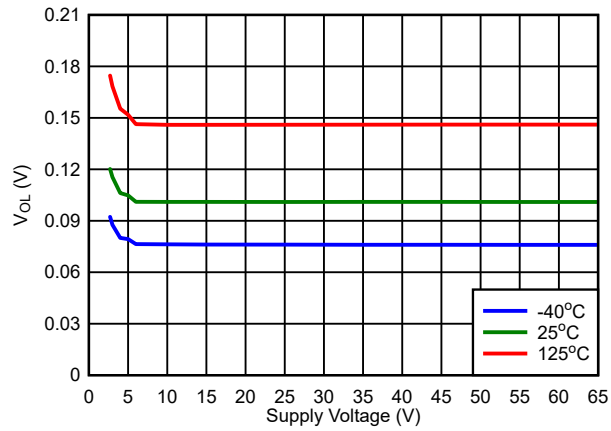

图 7-21. Push-Pull Active High V_{OL} vs V_{DD}

7.8 Typical Characteristics (continued)

Typical characteristics show the typical performance of the device. Test conditions are T_A = 25°C, R_{PU} = 100 kΩ, C_{Load} = 50 pF, unless otherwise noted.

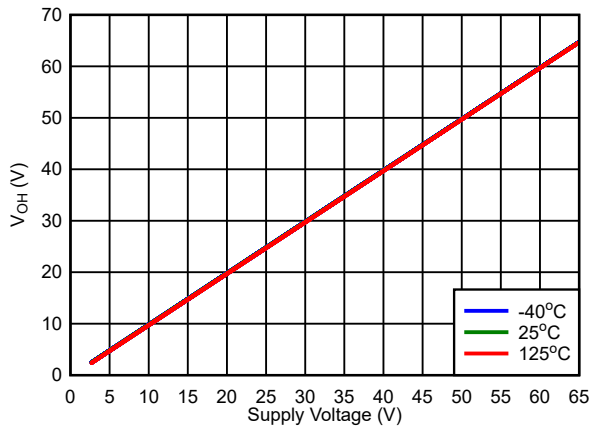

图 7-22. Push-Pull Active Low V_{OH} vs V_{DD}

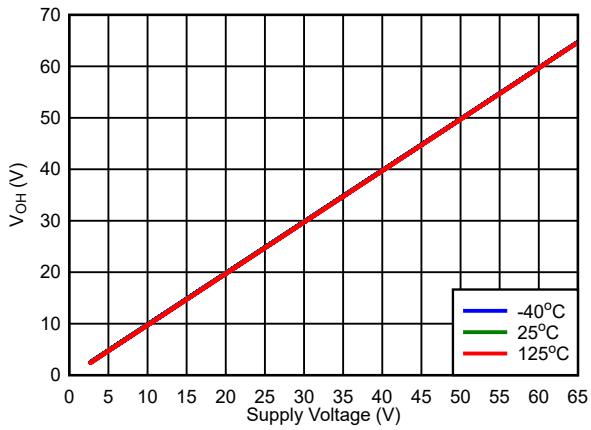

图 7-23. Push-Pull Active High V_{OH} vs V_{DD}

Copyright © 2023 Texas Instruments Incorporated

8 Detailed Description

8.1 Overview

The TPS3760 is a family of high voltage and low quiescent current reset ICs with fixed threshold voltage. A voltage divider is integrated to eliminate the need for external resistors and eliminate leakage current that comes with resistor dividers. However, it can also support an external resistor if required by the application. The lowest threshold 800 mV (bypass internal resistor ladder) is recommenced for external resistors use case to take advantage of faster detection time and lower I_{SENSE} current.

VDD, SENSE and RESET pins can support 65 V continuous operation; both VDD and SENSE voltage levels can be independent of each other, meaning VDD pin can be connected at 2.7 V while SENSE pins are connected to a higher voltage. Note, the TPS3760 does not have clamps within the device so external circuits or devices must be added to limit the voltages to the absolute maximum limit.

Additional features include programmable sense time delay (CTS) and reset delay time and manual reset (CTR / $\overline{MR}$).

8.2 Functional Block Diagram

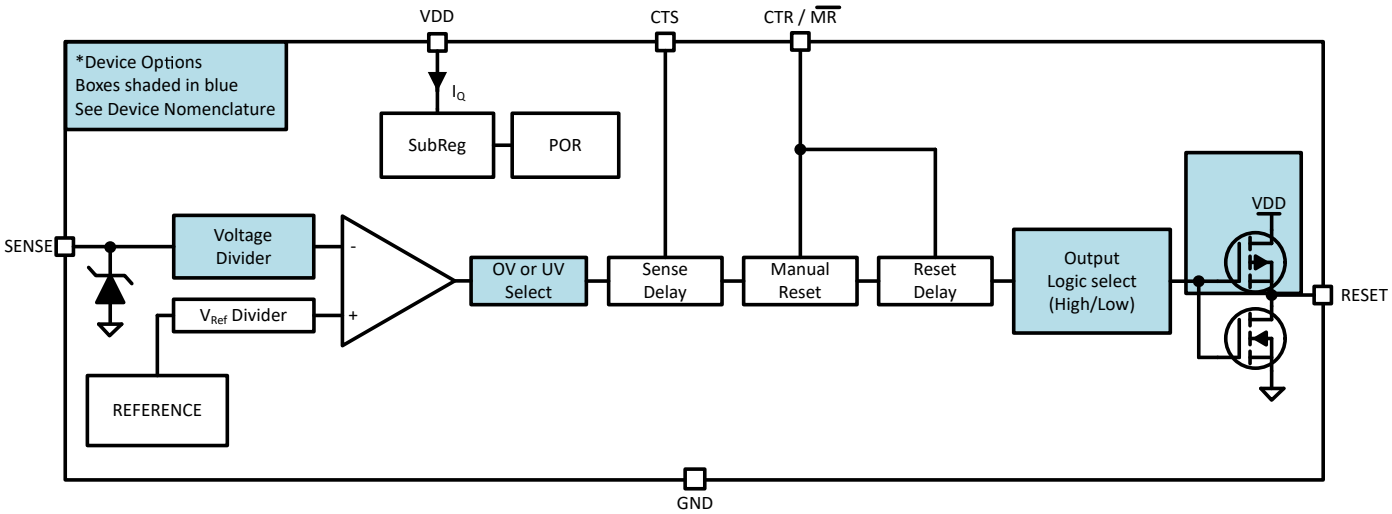

图 8-1. Functional Block Diagram [1]

[1] Refer to 节 5 for complete list of topologies and output logic combination

8.3 Feature Description

8.3.1 Input Voltage (VDD)

VDD operating voltage ranges from 2.7 V to 65 V. An input supply capacitor is not required for this device; however, if the input supply is noisy good analog practice is to place a 0.1 µF capacitor between the VDD and GND.

VDD needs to be at or above $V_{DD(MIN)}$ for at least the start-up time delay (t_{SD}) for the device to be fully functional.

VDD voltage is independent of V_{SENSE} and V_{RESET}, meaning that VDD can be higher or lower than the other pins.

8.3.1.1 Undervoltage Lockout (V_{POR} < V_{DD} < UVLO)

When the voltage on VDD is less than the UVLO voltage, but greater than the power-on reset voltage (V_{POR}), the output pins will be in reset, regardless of the voltage at SENSE pins.

8.3.1.2 Power-On Reset (V_{DD} < V_{POR})

When the voltage on VDD is lower than the power on reset voltage (V_{POR}), the output signal is undefined and is not to be relied upon for proper device function.

Note: 图 8-2 and 图 8-3 assume an external pull-up resistor is connected to the reset pin via VDD.

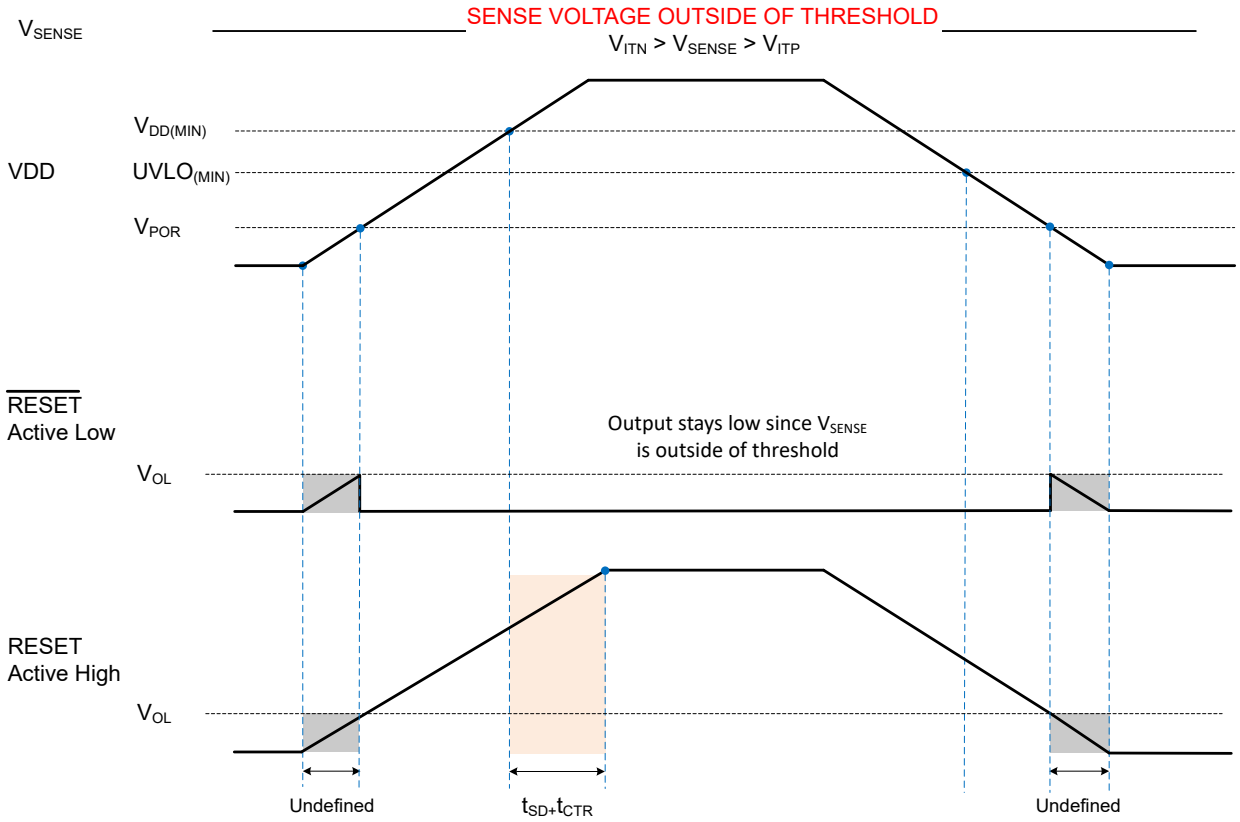

图 8-2. Power Cycle (SENSE Outside of Nominal Voltage)

Copyright © 2023 Texas Instruments Incorporated

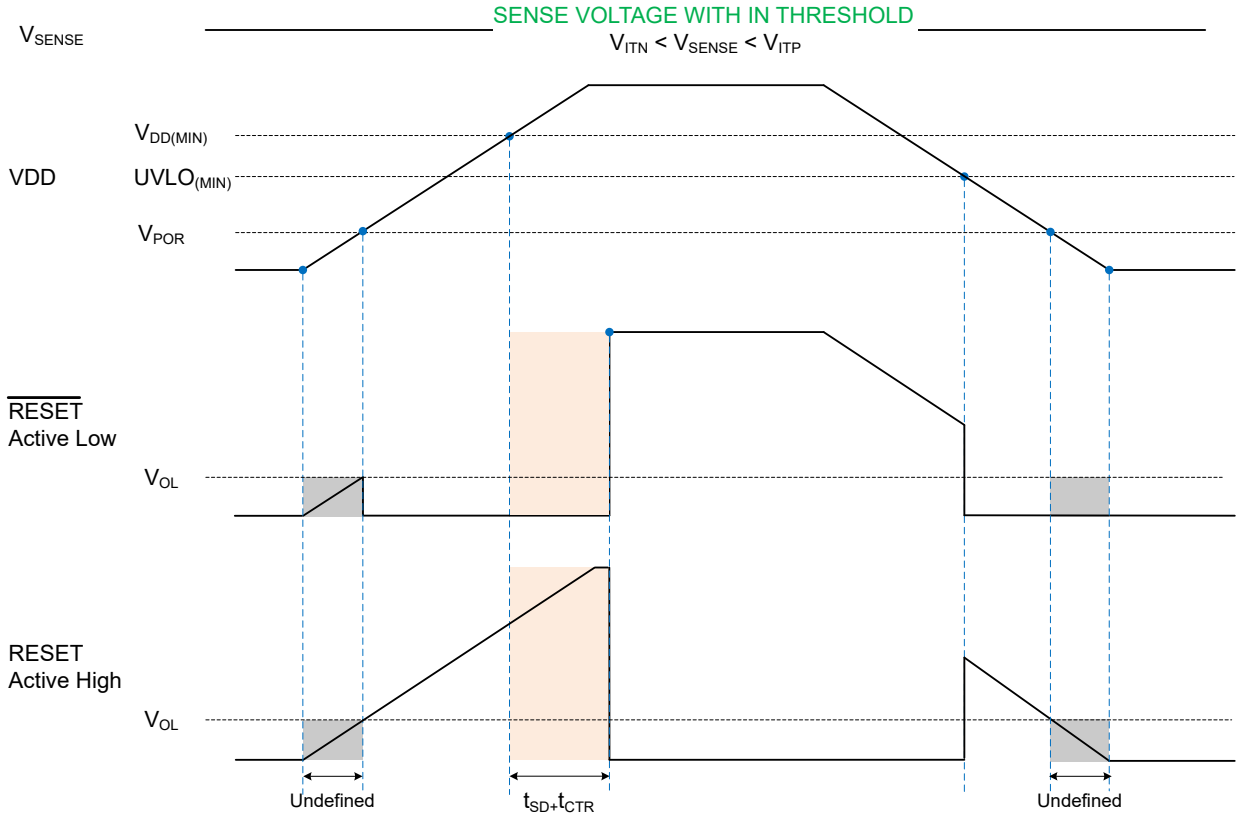

图 8-3. Power Cycle (SENSE Within Nominal Voltage)

8.3.2 SENSE

The TPS3760 high voltage family integrates a voltage comparator, a precision reference voltage and a trimmed resistor divider. This configuration optimizes device accuracy because all resistor tolerances are accounted for in the accuracy and performance specifications. Device also has built-in hysteresis that provides noise immunity and ensures stable operation.

Although not required in most cases, for noisy applications good analog design practice is to place a 10 nF to 100 nF bypass capacitor at the SENSE inputs in order to reduce sensitivity to transient voltages on the monitored signal. SENSE can be connected directly to VDD pin.

8.3.2.1 SENSE Hysteresis

Built-in hysteresis to avoid erroneous output reset release. The hysteresis is opposite to the threshold voltage; for overvoltage options the hysteresis is subtracted from the positive threshold (V_{ITP}), for undervoltage options hysteresis is added to the negative threshold (V_{ITN}).

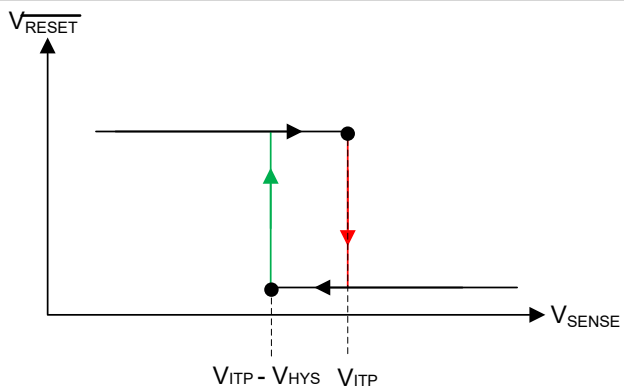

图 8-4. Hysteresis (Overvoltage Active-Low)

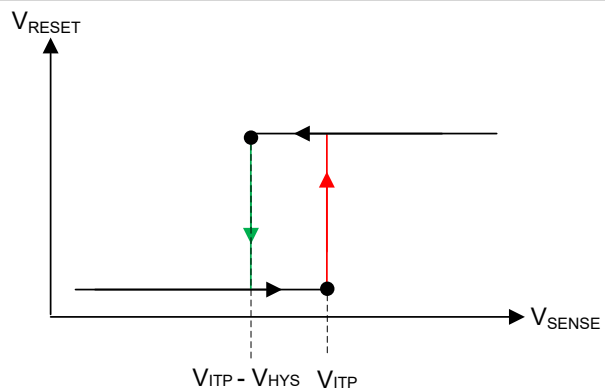

图 8-5. Hysteresis (Overvoltage Active-High)

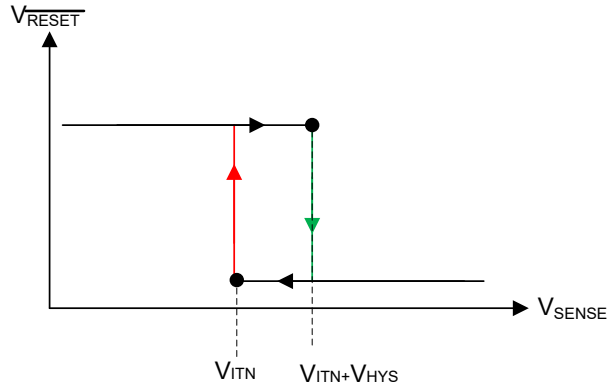

图 8-6. Hysteresis (Undervoltage Active-High)

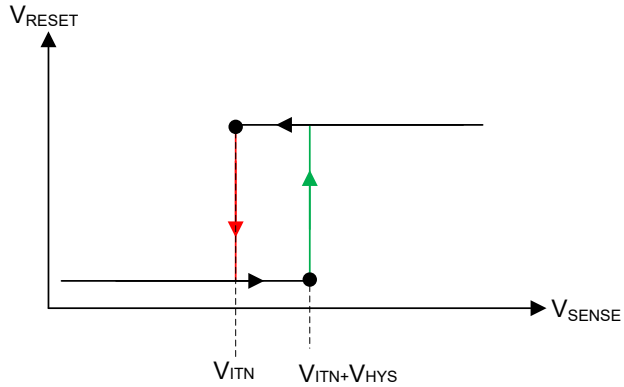

图 8-7. Hysteresis (Undervoltage Active-Low)

Copyright © 2023 Texas Instruments Incorporated

表 8-1. Common Hysteresis Lookup Table

TARGET			DEVICE ACTUAL HYSTERESIS OPTION
DETECT THRESHOLD	TOPOLOGY	RELEASE VOLTAGE (V)	
18.0 V	Overvoltage	17.5 V	-3%
18.0 V	Overvoltage	16.0 V	-11%
17.0 V	Overvoltage	16.5 V	-3%
16.0 V	Overvoltage	15.0 V	-6%
15.0 V	Overvoltage	14.0 V	-7%
6.0 V	Undervoltage	6.5 V	0.5 V
5.5 V	Undervoltage	6 V	0.5 V
8 V	Undervoltage	9 V	1 V
5 V	Undervoltage	7.5 V	2.5 V

表 8-1 shows a sample of hysteresis and voltage options for the TPS3760. For threshold voltages ranging from 2.7 V to 8 V, one option is to select a fixed hysteresis value ranging from 0.5 V to 2.5 V in increments of 0.5 V. Additionally, a second option can be selected where the hysteresis value is a percentage of the threshold voltage. The percentage of voltage hysteresis ranges from 2% to 13%.

Knowing the amount of hysteresis voltage, the release voltage for the undervoltage (UV) channel is ($V_{ITN\ (UV)}$ + V_{HYS}) and for the overvoltage (OV) channel is ($V_{ITP\ (OV)}$ - V_{HYS}). The accuracy of the release voltage, or stated in the Electrical Characteristics as *Hysteresis Accuracy* is ±1.5%. Expanding what is shown in 表 8-1, below are a few voltage hysteresis examples that include the hysteresis accuracy:

<u>Undervoltage (UV) Channel</u>

V_{ITN} = 0.8 V

Voltage Hysteresis (V_{HYS}) = 5% = 40 mV

Hysteresis Accuracy = ±1.5% = 39.4 mV or 40.6 mV

Release Voltage = V_{ITN} + V_{HYS} = 839.4 mV to 840.6 mV

<u>Overvoltage (OV) Channel</u>

V_{ITP} = 8 V

Voltage Hysteresis (V_{HYS}) = 2 V

Hysteresis Accuracy = ±1.5% = 1.97 V or 2.03 V

Release Voltage = V_{ITN} - V_{HYS} = 5.97 V to 6.03 V

Copyright © 2023 Texas Instruments Incorporated

8.3.3 Output Logic Configurations

TPS3760 is a single channel device that has a single input sense pin and a single reset pin. The single channel is available as Open-Drain and Push-Pull.

The available output logic configuration combinations are shown in 表 8-2.

表 8-2. TPS3760 Output Logic

DESCRIPTION	NOMENCLATURE	VALUE
GPN	**TPS3760 (+ topology)**	**CHANNEL CONFIGURATION**
Topology (OV and UV only) • UV = Undervoltage • OV = Overvoltage • PP = Push-Pull • OD = Open-Drain • L = Active low • H = Active high	TPS3760A	UV OD L
	TPS3760B	UV PP L
	TPS3760C	UV OD H
	TPS3760D	UV PP H
	TPS3760E	OV OD L
	TPS3760F	OV PP L
	TPS3760G	OV OD H
	TPS3760H	OV PP H

8.3.3.1 Open-Drain

Open-drain output requires an external pull-up resistor to hold the voltage high to the required voltage logic. Connect the pull-up resistor to the proper voltage rail to enable the output to be connected to other devices at the correct interface voltage levels.

To select the right pull-up resistor consider system V_{OH} and the (I_{lkg}) current provided in the electrical characteristics, high resistors values will have a higher voltage drop affecting the output voltage high. The open-drain output can be connected as a wired-AND logic with other open-drain signals such as another TPS3760 open-drain output pin.

8.3.3.2 Push-Pull

Push-Pull output does not require an external resistor since is the output is internally pulled-up to VDD during V_{OH} condition and output will be connected to GND during V_{OH} condition.

8.3.3.3 Active-High (RESET)

RESET (active-high), denoted with no bar above the pin label. RESET remains low (V_{OL}, deasserted) as long as sense voltage is in normal operation within the threshold boundaries and VDD voltage is above UVLO. To assert a reset sense pins needs to meet the condition below:

- For undervoltage variant the SENSE voltage need to cross the lower boundary (V_{ITN}).
- For overvoltage variant the SENSE voltage needs to cross the upper boundary (V_{ITP}).

8.3.3.4 Active-Low ($\overline{RESET}$)

$\overline{RESET}$ (active low) denoted with a bar above the pin label. $\overline{RESET}$ remains high voltage (V_{OH}, deasserted) (open-drain variant V_{OH} is measured against the pullup voltage) as long as sense voltage is in normal operation within the threshold boundaries and VDD voltage is above UVLO. To assert a reset sense pins needs to meet the condition below:

- For undervoltage variant the SENSE voltage need to cross the lower boundary (V_{ITN}).
- For overvoltage variant the SENSE voltage needs to cross the upper boundary (V_{ITP}).

Copyright © 2023 Texas Instruments Incorporated

8.3.4 User-Programmable Reset Time Delay

TPS3760 has adjustable reset release time delay with external capacitors.

- A capacitor in CTR / $\overline{MR}$ programs the reset time delay of the output.
- No capacitor on this pin gives the fastest reset delay time indicated in the 节 7.6.

8.3.4.1 Reset Time Delay Configuration

The time delay (t_{CTR}) can be programmed by connecting a capacitor between CTR pin and GND.

The relationship between external capacitor $C_{CTR_EXT\ (typ)}$ and the time delay $t_{CTR\ (typ)}$ is given by 方程式 1.

$$t_{CTR\ (typ)} = -\ln(0.28) \times R_{CTR\ (typ)} \times C_{CTR_EXT\ (typ)} + t_{CTR\ (no\ cap)} \quad (1)$$

$R_{CTR\ (typ)}$ = is in kilo ohms (kOhms)

$C_{CTR_EXT\ (typ)}$ = is given in microfarads (µF)

$t_{CTR\ (typ)}$ = is the reset time delay (ms)

The reset delay varies according to three variables: the external capacitor (C_{CTR_EXT}), CTR pin internal resistance (R_{CTR}) provided in 节 7, and a constant. The minimum and maximum variance due to the constant is show in 方程式 2 and 方程式 3:

$$t_{CTR\ (min)} = -\ln(0.31) \times R_{CTR\ (min)} \times C_{CTR_EXT\ (min)} + t_{CTR\ (no\ cap\ (min))} \quad (2)$$

$$t_{CTR\ (max)} = -\ln(0.25) \times R_{CTR\ (max)} \times C_{CTR_EXT\ (max)} + t_{CTR\ (no\ cap\ (max))} \quad (3)$$

The recommended maximum reset delay capacitor for the TPS3760 is limited to 10 µF as this ensures enough time for the capacitor to fully discharge when a voltage fault occurs. Also, having a too large of a capacitor value can cause very slow charge up (rise times) due to capacitor leakage and system noise can cause the the internal circuit to trip earlier or later near the threshold. This leads to variation in time delay where it can make the delay accuracy worse in the presence of system noise.

When a voltage fault occurs, the previously charged up capacitor discharges and if the monitored voltage returns from the fault condition before the delay capacitor discharges completely, the delay will be shorter than expected. The capacitor will begin charging from a voltage above zero and resulting in shorter than expected time delay. A larger delay capacitor can be used so long as the capacitor has enough time to fully discharge during the duration of the voltage fault. To ensure the capacitor is fully discharged, the time period or duration of the voltage fault needs to be greater than 5% of the programmed reset time delay.

Copyright © 2023 Texas Instruments Incorporated

8.3.5 User-Programmable Sense Delay

TPS3760 has adjustable sense release time delay with external capacitors.

- A capacitor in CTS programs the excursion detection on SENSE.
- No capacitor on these pins gives the fastest detection time indicated in the 节 7.6.

8.3.5.1 Sense Time Delay Configuration

The time delay (t_{CTS}) can be programmed by connecting a capacitor between CTS pin and GND.

The relationship between external capacitor $C_{CTS_EXT\ (typ)}$ and the time delay $t_{CTS\ (typ)}$ is given by 方程式 4.

$$t_{CTS\ (typ)} = -\ln(0.28) \times R_{CTS\ (typ)} \times C_{CTS_EXT\ (typ)} + t_{CTS\ (no\ cap)} \quad (4)$$

R_{CTS} = is in kilo ohms (kOhms)

C_{CTS_EXT} = is given in microfarads (µF)

t_{CTS} = is the sense time delay (ms)

The sense delay varies according to three variables: the external capacitor (C_{CTS_EXT}), CTS pin internal resistance (R_{CTS}) provided in Electrical Characteristics, and a constant. The minimum and maximum variance due to the constant is show in 方程式 5 and 方程式 6:

$$t_{CTS\ (min)} = -\ln(0.31) \times R_{CTS\ (min)} \times C_{CTS_EXT\ (min)} + t_{CTS\ (no\ cap\ (min))} \quad (5)$$

$$t_{CTS\ (max)} = -\ln(0.25) \times R_{CTS\ (max)} \times C_{CTS_EXT\ (max)} + t_{CTSx\ (no\ cap\ (max))} \quad (6)$$

The recommended maximum sense delay capacitor for the is limited to 10 µF as this ensures enough time for the capacitor to fully discharge when a voltage fault occurs. Also, having a too large of a capacitor value can cause very slow charge up (rise times) and system noise can cause the the internal circuit to trip earlier or later near the threshold. This leads to variation in time delay where it can make the delay accuracy worse in the presence of system noise.

When a voltage fault occurs, the previously charged up capacitor discharges and if the monitored voltage returns from the fault condition before the delay capacitor discharges completely, the delay will be shorter than expected. The capacitor will begin charging from a voltage above zero and resulting in shorter than expected time delay. A larger delay capacitor can be used so long as the capacitor has enough time between fault events to fully discharge during the duration of the voltage fault. To ensure the capacitor is fully discharged, the time period or time duration between fault events needs to be greater than 10% of the programmed sense time delay.

Copyright © 2023 Texas Instruments Incorporated

8.3.6 Manual RESET (CTR / $\overline{MR}$) Input

The manual reset input allows a processor or other logic circuits to initiate a reset. In this section $\overline{MR}$ is a generic reference to (CTR / $\overline{MR}$). A logic low on $\overline{MR}$ causes $\overline{RESET}$ to assert on reset output. After $\overline{MR}$ is left floating, $\overline{RESET}$ will release the reset if the voltage at SENSE pin is at nominal voltage. $\overline{MR}$ should not be driven high, this pin should be left floating or connected to a capacitor to GND, this pin can be left unconnected if is not used.

If the logic driving the $\overline{MR}$ cannot tri-state (floating and GND) then a logic-level FET should be used as illustrated in 图 8-8.

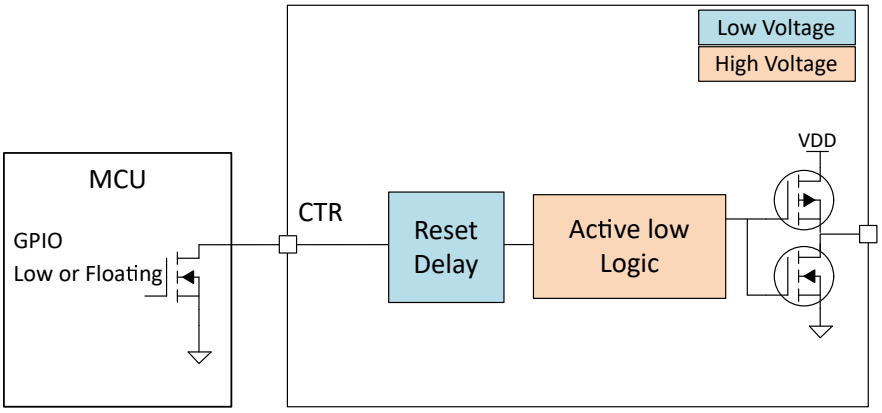

图 8-8. Manual Reset Implementation

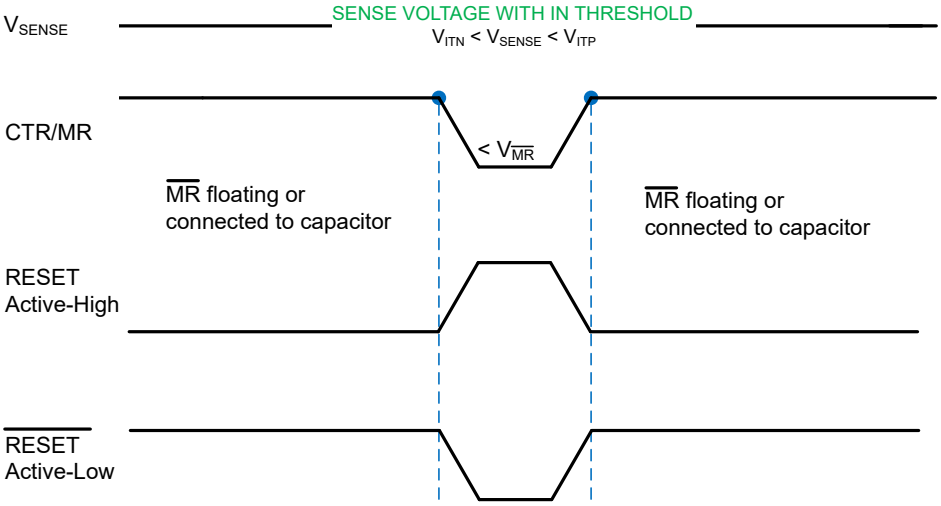

图 8-9. Manual Reset Timing Diagram

表 8-3. $\overline{MR}$ Functional Table

$\overline{MR}$	SENSE ON NOMINAL VOLTAGE	RESET STATUS
Low	Yes	Reset asserted
Floating	Yes	Fast reset release when SENSE voltage goes back to nominal voltage
Capacitor	Yes	Programmable reset time delay
High	Yes	NOT Recommended

8.3.7 $\overline{\text{RESET}}$ Latch Mode

The TPS3760 features a output latch mode on the RESET/$\overline{\text{RESET}}$ pin when connecting the $\overline{\text{LATCH}}$ pin to common ground. A pull-down resistor, 10 kΩ, is recommended to limit current consumption of the system. In latch mode, if the RESET/$\overline{\text{RESET}}$ pin is low or triggers low and less than 1.4V is applied to the $\overline{\text{LATCH}}$ pin, the RESET/$\overline{\text{RESET}}$ pin stays asserted regardless if VSENSE goes within the acceptable voltage boundaries (VSENSE > VITP + V_{hyst} for UV or VSENSE < VITN - V_{hyst} for OV). To unlatch the device a voltage greater than 2.1 V for greater than 3 µs is applied to the $\overline{\text{LATCH}}$ pin. This is recommended to maintain a proper unlatch. The RESET/$\overline{\text{RESET}}$ pin triggers high after the duration of t_{ctr}. TI recommends using a series resistance to limit current when an unlatch voltage is applied.

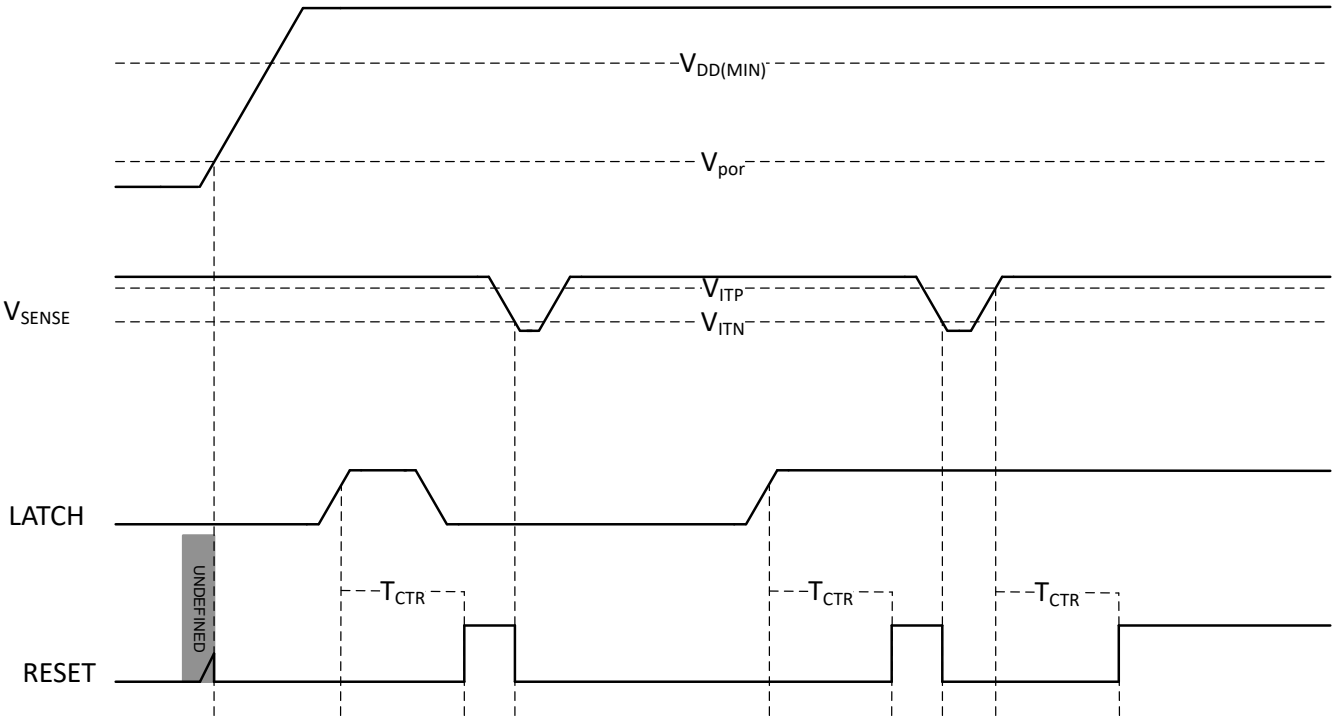

图 8-10. Latch Timing Diagram

Copyright © 2023 Texas Instruments Incorporated

8.4 Device Functional Modes

表 8-4. Undervoltage Detect Functional Mode Truth Table

DESCRIPTION	SENSE		CTR [1] / $\overline{MR}$ PIN	VDD PIN	OUTPUT [2] ($\overline{RESET}$ PIN)
	PREVIOUS CONDITION	CURRENT CONDITION			
Normal Operation	SENSE > $V_{ITN(UV)}$	SENSE > $V_{ITN(UV)}$	Open or capacitor connected	$V_{DD} > V_{DD(MIN)}$	High
Undervoltage Detection	SENSE > $V_{ITN(UV)}$	SENSE < $V_{ITN(UV)}$	Open or capacitor connected	$V_{DD} > V_{DD(MIN)}$	Low
Undervoltage Detection	SENSE < $V_{ITN(UV)}$	SENSE > $V_{ITN(UV)}$	Open or capacitor connected	$V_{DD} > V_{DD(MIN)}$	Low
Normal Operation	SENSE < $V_{ITN(UV)}$	SENSE > $V_{ITN(UV)}$ + HYS	Open or capacitor connected	$V_{DD} > V_{DD(MIN)}$	High
Manual Reset	SENSE > $V_{ITN(UV)}$	SENSE > $V_{ITN(UV)}$	Low	$V_{DD} > V_{DD(MIN)}$	Low
UVLO Engaged	SENSE > $V_{ITN(UV)}$	SENSE > $V_{ITN(UV)}$	Open or capacitor connected	$V_{POR} < V_{DD} < V_{DD(MIN)}$	Low
Below V_{POR}, Undefined Output	SENSE > $V_{ITN(UV)}$	SENSE > $V_{ITN(UV)}$	Open or capacitor connected	$V_{DD} < V_{POR}$	Undefined

(1) Reset time delay is ignored in the truth table.
(2) Open-drain active low output requires an external pull-up resistor to a pull-up voltage.

表 8-5. Overvoltage Detect Functional Mode Truth Table

DESCRIPTION	SENSE		CTR [1] / $\overline{MR}$ PIN	VDD PIN	OUTPUT [2] ($\overline{RESET}$ PIN)
	PREVIOUS CONDITION	CURRENT CONDITION			
Normal Operation	SENSE < $V_{ITN(OV)}$	SENSE < $V_{ITN(OV)}$	Open or capacitor connected	$V_{DD} > V_{DD(MIN)}$	High
Overvoltage Detection	SENSE < $V_{ITN(OV)}$	SENSE > $V_{ITN(OV)}$	Open or capacitor connected	$V_{DD} > V_{DD(MIN)}$	Low
Overvoltage Detection	SENSE > $V_{ITN(OV)}$	SENSE < $V_{ITN(OV)}$	Open or capacitor connected	$V_{DD} > V_{DD(MIN)}$	Low
Normal Operation	SENSE > $V_{ITN(OV)}$	SENSE < $V_{ITN(OV)}$ - HYS	Open or capacitor connected	$V_{DD} > V_{DD(MIN)}$	High
Manual Reset	SENSE < $V_{ITN(OV)}$	SENSE < $V_{ITN(OV)}$	Low	$V_{DD} > V_{DD(MIN)}$	Low
UVLO Engaged	SENSE < $V_{ITN(OV)}$	SENSE < $V_{ITN(OV)}$	Open or capacitor connected	$V_{POR} < V_{DD}$ < UVLO	Low
Below V_{POR}, Undefined Output	SENSE < $V_{ITN(OV)}$	SENSE < $V_{ITN(OV)}$	Open or capacitor connected	$V_{DD} < V_{POR}$	Undefined

(1) Reset time delay is ignored in the truth table.
(2) Open-drain active low output requires an external pull-up resistor to a pull-up voltage.

Copyright © 2023 Texas Instruments Incorporated

9 Application and Implementation

备注

Information in the following applications sections is not part of the TI component specification, and TI does not warrant its accuracy or completeness. TI's customers are responsible for determining suitability of components for their purposes, as well as validating and testing their design implementation to confirm system functionality.

9.1 Application Information

The following sections describe in detail how to properly use this device. As this device has many applications and setups, there are many situations that this datasheet can not characterize in detail and will vary from these applications depending on the requirements of the final application

9.2 Adjustable Voltage Thresholds

方程式 7 illustrates an example of how to adjust the voltage threshold with external resistor dividers. The resistors can be calculated depending on the desired voltage threshold and device part number. TI recommends using the 0.8 V voltage threshold device when using an adjustable voltage variant. This variant bypasses the internal resistor ladder.

For example, consider a 12 V rail being monitored V_{MON} for undervoltage (UV) using of the TPS3760A012DYYR variant. Using 方程式 7 and shown in 方程式 8, R_1 is the top resistor of the resistor divider that is between V_{MON} and V_{SENSE}, R_2 is the bottom resistor that is between V_{SENSE} and GND, V_{MON} is the voltage rail that is being monitored and V_{SENSE} is the input threshold voltage. The monitored UV threshold, denoted as V_{MON-}, where the device will assert a reset signal occurs when $V_{SENSE} = V_{IT-(UV)}$ or, for this example, $V_{MON-} = 10.8V$ which is 90% from 12 V. Using 方程式 7 and assuming $R_2 = 10k\Omega$, R_1 can be calculated shown in 方程式 8 where I_{R1} is represented in 方程式 9:

$$V_{SENSE} = V_{MON-} \times (R_2 \div (R_1 + R_2)) \quad (7)$$

$$R_1 = (V_{MON-} - V_{SENSE}) \div I_{R1} \quad (8)$$

$$I_{R1} = I_{R2} = V_{SENSE} \div R_2 \quad (9)$$

Substituting 方程式 9 into 方程式 8 and solving for R_1 in 方程式 7, $R_1 = 125k\Omega$. The TPS3760A012DYYR is typically meant to monitor a 0.8 V rail with ±2% voltage threshold hysteresis. For the reset signal to become deasserted, V_{MON} would need to go above $V_{IT-} + V_{HYS}$. For this example,
$V_{MON} = 11.016$ V when the reset signal becomes deasserted.

There are inaccuracies that must be taken into consideration while adjusting voltage thresholds. Aside from the tolerance of the resistor divider, there is an internal resistance of the SENSE pin that may affect the accuracy of the resistor divider. Although expected to be very high impedance, users are recommended to calculate the values for the design specifications. The internal SENSE resistance R_{SENSE} can be calculated by the SENSE voltage V_{SENSE} divided by the SENSE current I_{SENSE} as shown in 方程式 11. V_{SENSE} can be calculated using 方程式 7 depending on the resistor divider and monitored voltage. I_{SENSE} can be calculated using 方程式 10.

$$I_{SENSE} = [(V_{MON} - V_{SENSE}) \div R_1] - (V_{SENSE} \div R_2) \quad (10)$$

$$R_{SENSE} = V_{SENSE} \div I_{SENSE} \quad (11)$$

Copyright © 2023 Texas Instruments Incorporated

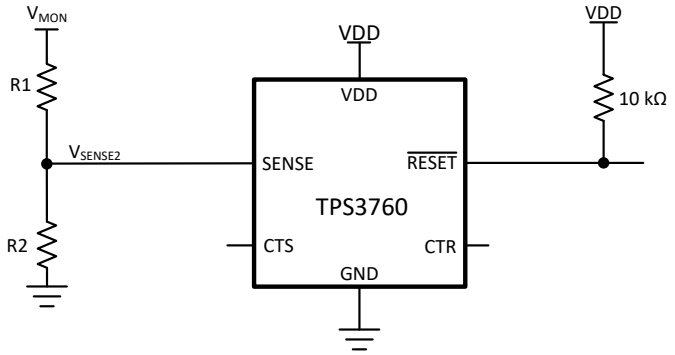

图 9-1. Adjustable Voltage Threshold with External Resistor Dividers

9.3 Typical Application

9.3.1 Design 1: Off-Battery Monitoring

This application is intended for the initial power stage in applications with the 12 V batteries. Variation of the battery voltage is common between 9 V and 16 V. Furthermore, if cold-cranking and load dump conditions are considered, voltage transients can occur as low as 3 V and as high as 42 V. In this design example, we are highlighting the ability for low power, direct off-battery voltage supervision.

图 11-1 illustrates an example of how the TPS3760 is monitoring the battery voltage while being powered by it, as well.

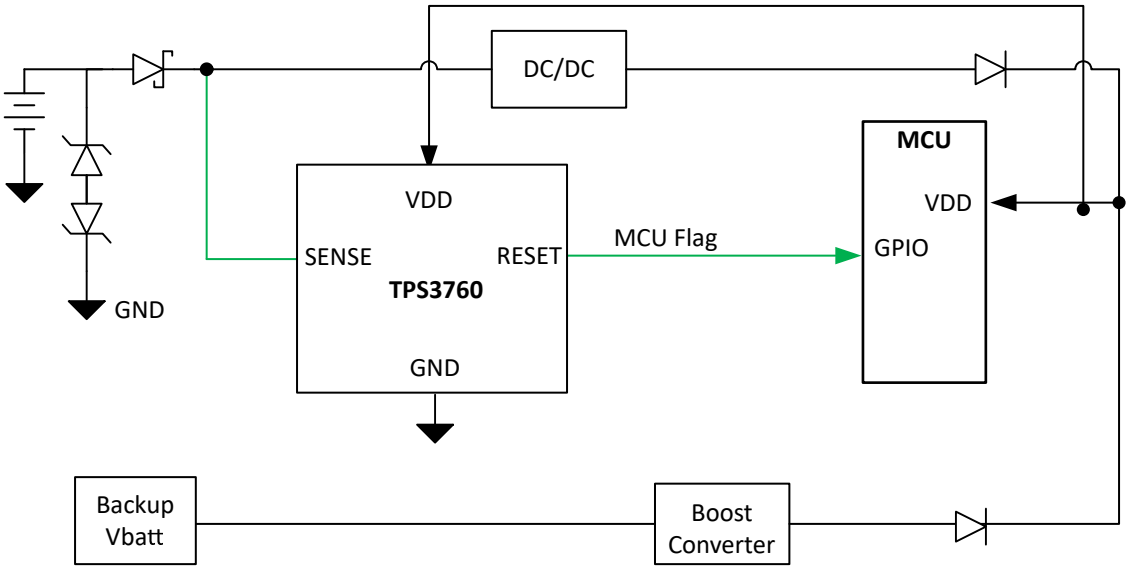

图 9-2. TPS3760 Overvoltage Supervisor with Direct Off-Battery Monitoring

9.3.1.1 Design Requirements

This design requires voltage supervision on a 12 V power supply voltage rail with possibility of the 12 V rail rising up as high as 42 V. The undervoltage fault occurs when the power supply voltage drops below 7.7 V.

PARAMETER	DESIGN REQUIREMENT	DESIGN RESULT
Power Rail Voltage Supervision	Monitor 12-V power supply for undervoltage condition, trigger a undervoltage fault at 7.7 V.	TPS3760 provides voltage monitoring with 1.5% max accuracy with adjustable/non-adjustable variations.
Maximum Input Power	Operate with power supply input up to 42 V.	The TPS3760 can support a VDD of up to 65 V.
Output logic voltage	Open-Drain Output Topology	An open-drain output is recommended to provide the correct reset signal, but a push-pull can also be used.
Maximum system current consumption	2 µA max when power supply is at 12 V typical	TPS3760 allows for I_Q to remain low with support of up to 65 V. This allows for no external resistor divider to be required.
Voltage Monitor Accuracy	Maximum voltage monitor accuracy of 1.5%.	The TPS3760 has 1.5% maximum voltage monitor accuracy.
Delay when returning from fault condition	$\overline{\text{RESET}}$ delay of at least 12.8 ms when returning from a undervoltage fault.	C_{CTR} = 10 nF sets 12.8 ms delay

9.3.1.2 Detailed Design Procedure

The primary advantage of this application is being able to directly monitor a voltage on an automotive battery without needing external an resistor dividers on the SENSE input. This keeps the overall I_Q of the design low while still achieving the desired rail monitoring.

Voltage rail monitoring is done by connecting the SENSE input directly to the battery rail after the TVS protection diodes. The TPS3760 that is being used in this example is a fixed voltage variant where theSENSE threshold voltage has been set internally. Word of caution, the TVS protection diodes must be chosen such that the transient voltages on the monitored rails do not exceed the absolute max limit listed in 节 7.1.

To use this configuration, the specific voltage threshold variation of the device must be chosen according to the application. In this configuration, the '77' variation must be chosen for 7.7 V as shown in 节 5.

The device being able to handle 65 V on VDD means the monitored voltage rail can go as high as 42 V for the application transients and not violate the recommended maximum for the supervisor as it usually would. This is useful when monitoring a voltage rail that has a wide range that may go much higher than the nominal rail voltage such as in this case. Good design practice recommends using a 0.1 µF capacitor on the VDD pin and this capacitance may need to increase if using an adjustable version with a resistor divider.

Copyright © 2023 Texas Instruments Incorporated

9.3.1.3 Application Curves

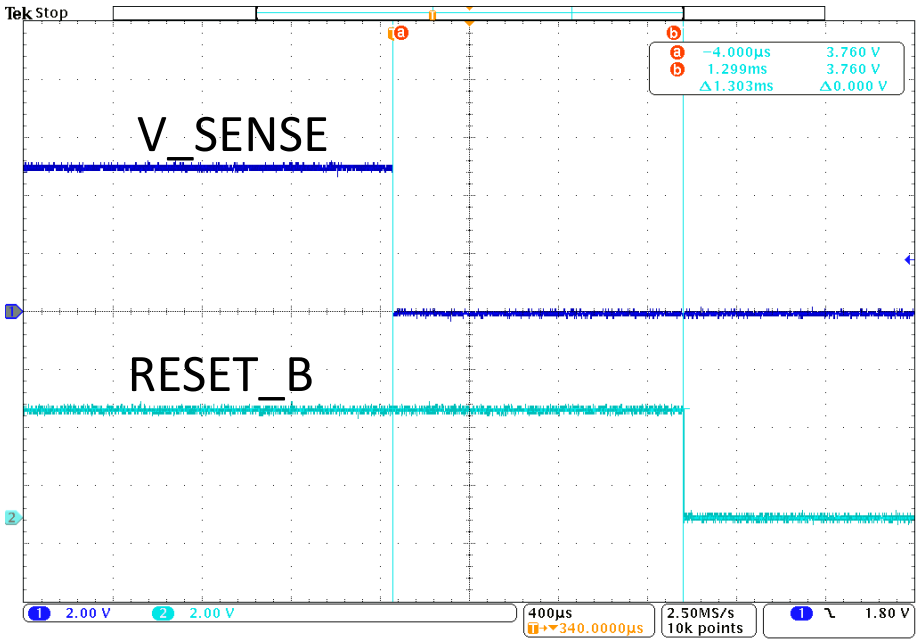

图 9-3. Undervoltage Reset Waveform

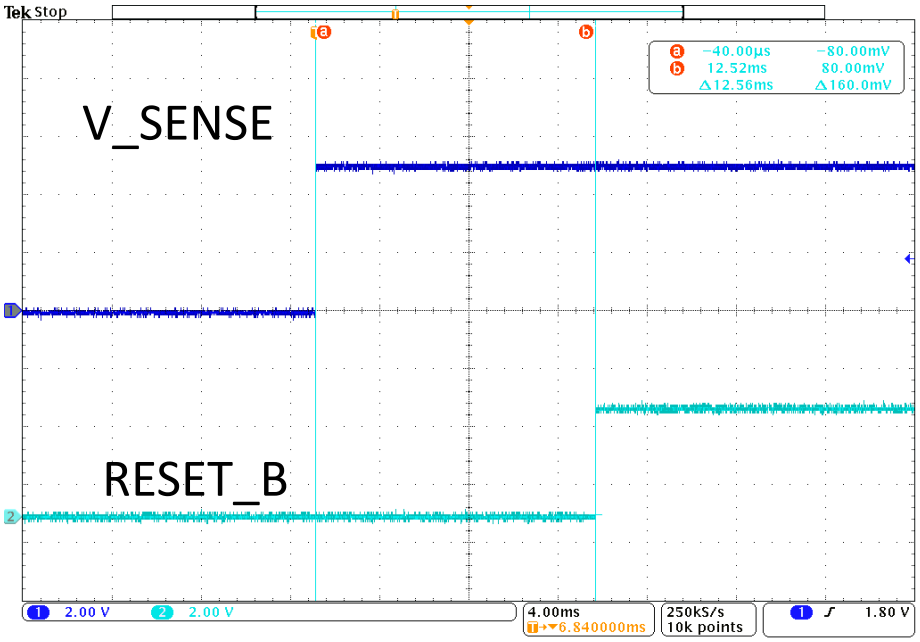

图 9-4. Undervoltage Recovery Waveform

10 Power Supply Recommendations

These devices are designed to operate from an input supply with a voltage range between 1.4 V (V_{POR}) to 65 V (maximum operation). Good analog design practice recommends placing a minimum 0.1 µF ceramic capacitor as near as possible to the VDD pin.

10.1 Power Dissipation and Device Operation

The permissible power dissipation for any package is a measure of the capability of the device to pass heat from the power source, the junctions of the IC, to the ultimate heat sink, the ambient environment. Thus, the power dissipation is dependent on the ambient temperature and the thermal resistance across the various interfaces between the die junction and ambient air.

The maximum continuous allowable power dissipation for the device in a given package can be calculated using 方程式 12:

$$P_{D\text{-}MAX} = ((T_{J\text{-}MAX} – T_A) / R_{\theta JA}) \quad (12)$$

The actual power being dissipated in the device can be represented by 方程式 13:

$$P_D = V_{DD} \times I_{DD} + p_{RESET} \quad (13)$$

p_{RESET} is calculated by 方程式 14 or 方程式 15

$$p_{RESET\ (PUSHPULL)} = VDD - V_{RESET} \times I_{RESET} \quad (14)$$

$$p_{RESET\ (OPEN\text{-}DRAIN)} = V_{RESET} \times I_{RESET} \quad (15)$$

方程式 12 and 方程式 13 establish the relationship between the maximum power dissipation allowed due to thermal consideration, the voltage drop across the device, and the continuous current capability of the device. These two equations should be used to determine the optimum operating conditions for the device in the application.

In applications where lower power dissipation (P_D) and/or excellent package thermal resistance ($R_{\theta JA}$) is present, the maximum ambient temperature ($T_{A\text{-}MAX}$) may be increased.

In applications where high power dissipation and/or poor package thermal resistance is present, the maximum ambient temperature ($T_{A\text{-}MAX}$) may have to be de-rated. $T_{A\text{-}MAX}$ is dependent on the maximum operating junction temperature ($T_{J\text{-}MAX\text{-}OP}$ = 125°C), the maximum allowable power dissipation in the device package in the application ($P_{D\text{-}MAX}$), and the junction-to ambient thermal resistance of the part/package in the application ($R_{\theta JA}$), as given by 方程式 16:

$$T_{A\text{-}MAX} = (T_{J\text{-}MAX\text{-}OP} – (R_{\theta JA} \times P_{D\text{-}MAX})) \quad (16)$$

Copyright © 2023 Texas Instruments Incorporated

11 Layout

11.1 Layout Guidelines

- Make sure that the connection to the VDD pin is low impedance. Good analog design practice is to place a greater than 0.1 µF ceramic capacitor as near as possible to the VDD pin.
- To further improve the noise immunity on the SENSE pins, placing a 10 nF to 100 nF capacitor between the SENSE pin and GND can reduce the sensitivity to transient voltages on the monitored signal.
- If a capacitor is used on CTS or CTR, place these components as close as possible to the respective pins. If the capacitor adjustable pins are left unconnected, make sure to minimize the amount of parasitic capacitance on the pins to less than 5 pF.
- For open-drain variants, place the pull-up resistors on $\overline{\text{RESET}}$ as close to the pin as possible.
- When laying out metal traces, separate high voltage traces from low voltage traces as much as possible. If high and low voltage traces need to run close by, spacing between traces should be greater than 20 mils (0.5 mm).
- Do not have high voltage metal pads or traces closer than 20 mils (0.5 mm) to the low voltage metal pads or traces.

11.2 Layout Example

The layout example in 图 11-1 shows how the TPS3760 is laid out on a printed circuit board (PCB) with user-defined delays.

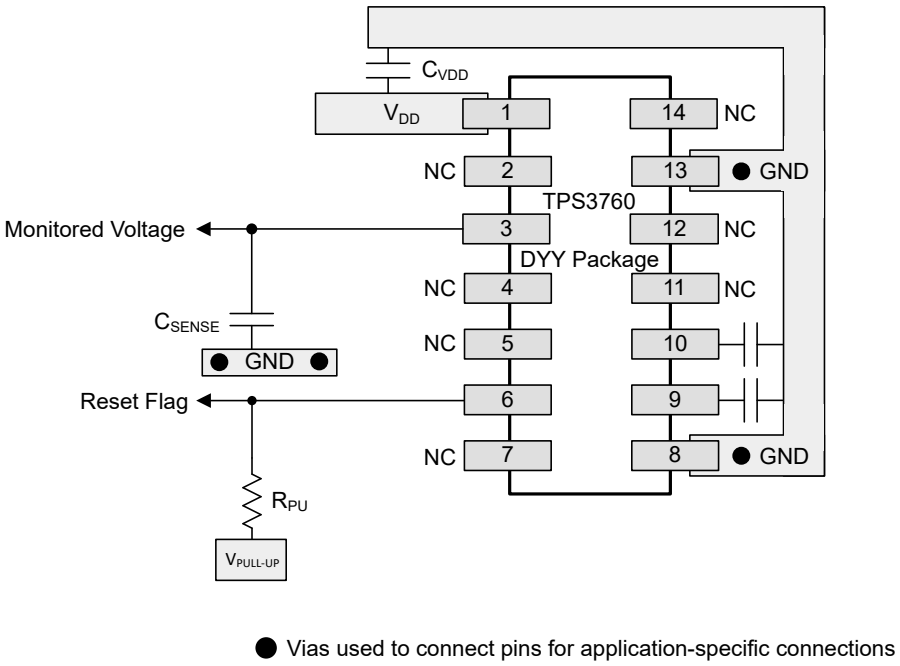

图 11-1. TPS3760 Recommended Layout

11.3 Creepage Distance

Per IEC 60664 Creepage is the shortest distance between two conductive parts or as shown in 图 11-2 the distance between high voltage conductive parts and grounded parts, the floating conductive part is ignored and subtracted from the total distance.

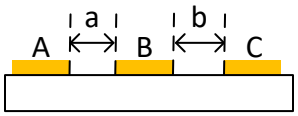

图 11-2. Creepage Distance

图 11-2 details

- A = Left pins (high voltage)
- B = Central pad (conductive not internally connected, can be left floating or connected to GND)
- C = Right pins (low voltages)
- Creepage distance = a + b

Copyright © 2023 Texas Instruments Incorporated

12 Device and Documentation Support

12.1 Device Nomenclature

节 5 shows how to decode the function of the device based on its part number

表 12-1 shows possible voltage options per channel. Contact TI sales representatives or on TI's E2E forum for details and availability of other options; minimum order quantities apply.

表 12-1. Voltage Options

100 mV STEPS				400 mV STEPS		500 mV STEPS		1 V STEPS	
NOMEN-CLATURE	VOLTAGE OPTIONS	NOMEN-CLATURE	VOLTAGE OPTIONS	NOMEN-CLATURE	VOLTAGE OPTIONS	NOMEN-CLATURE	VOLTAGE OPTIONS	NOMEN-CLATURE	VOLTAGE OPTIONS
01	800 mV (divider bypass)	**70**	7.0 V	**A0**	10.4 V	**D0**	20.5 V	**F0**	31.0 V
27	2.7 V	**71**	7.1 V	**A1**	10.8 V	**D1**	21.0 V	**F1**	32.0 V
28	2.8 V	**72**	7.2 V	**A2**	11.2 V	**D2**	21.5 V	**F2**	33.0 V
29	2.9 V	**73**	7.3 V	**A3**	11.6 V	**D3**	22.0 V	**F3**	34.0 V
30	3.0 V	**74**	7.4 V	**A4**	12.0 V	**D4**	22.5 V	**F4**	35.0 V
31	3.1 V	**75**	7.5 V	**A5**	12.4 V	**D5**	23.0 V	**F5**	36.0 V
32	3.2 V	**76**	7.6 V	**A6**	12.8 V	**D6**	23.5 V		
33	3.3 V	**77**	7.7 V	**A7**	13.2 V	**D7**	24.0 V		
34	3.4 V	**78**	7.8 V	**A8**	13.6 V	**D8**	24.5 V		
35	3.5 V	**79**	7.9 V	**A9**	14.0 V	**D9**	25.0 V		
36	3.6 V	**80**	8.0 V	**B0**	14.4 V	**E0**	25.5 V		
37	3.7 V	**81**	8.1 V	**B1**	14.8 V	**E1**	26.0 V		
38	3.8 V	**82**	8.2 V	**B2**	15.2 V	**E2**	26.5 V		
39	3.9 V	**83**	8.3 V	**B3**	15.6 V	**E3**	27.0 V		
40	4.0 V	**84**	8.4 V	**B4**	16.0 V	**E4**	27.5 V		
41	4.1 V	**85**	8.5 V	**B5**	16.4 V	**E5**	28.0 V		
42	4.2 V	**86**	8.6 V	**B6**	16.8 V	**E6**	28.5 V		
43	4.3 V	**87**	8.7 V	**B7**	17.2 V	**E7**	29.0 V		
44	4.4 V	**88**	8.8 V	**B8**	17.6 V	**E8**	29.5 V		
45	4.5 V	**89**	8.9 V	**B9**	18.0 V	**E9**	30.0 V		
46	4.6 V	**90**	9.0 V	**C0**	18.4 V				
47	4.7 V	**91**	9.1 V	**C1**	18.8 V				
48	4.8 V	**92**	9.2 V	**C2**	19.2 V				
49	4.9 V	**93**	9.3 V	**C3**	19.6 V				
50	5.0 V	**94**	9.4 V	**C4**	20.0 V				
51	5.1 V	**95**	9.5 V						
52	5.2 V	**96**	9.6 V						
53	5.3 V	**97**	9.7 V						
54	5.4 V	**98**	9.8 V						
55	5.5 V	**99**	9.9 V						
56	5.6 V	**00**	10.0 V						
57	5.7 V								
58	5.8 V								
59	5.9 V								
60	6.0 V								
61	6.1 V								

Copyright © 2023 Texas Instruments Incorporated

表 12-1. Voltage Options (continued)

100 mV STEPS				400 mV STEPS		500 mV STEPS		1 V STEPS	
NOMEN-CLATURE	VOLTAGE OPTIONS	NOMEN-CLATURE	VOLTAGE OPTIONS	NOMEN-CLATURE	VOLTAGE OPTIONS	NOMEN-CLATURE	VOLTAGE OPTIONS	NOMEN-CLATURE	VOLTAGE OPTIONS
62	6.2 V								
63	6.3 V								
64	6.4 V								
65	6.5 V								
66	6.6 V								
67	6.7 V								
68	6.8 V								
69	6.9 V								

12.2 接收文档更新通知

要接收文档更新通知，请导航至 ti.com 上的器件产品文件夹。点击*订阅更新* 进行注册，即可每周接收产品信息更改摘要。有关更改的详细信息，请查看任何已修订文档中包含的修订历史记录。

12.3 支持资源

TI E2E™ 支持论坛是工程师的重要参考资料，可直接从专家获得快速、经过验证的解答和设计帮助。搜索现有解答或提出自己的问题可获得所需的快速设计帮助。

链接的内容由各个贡献者“按原样”提供。这些内容并不构成 TI 技术规范，并且不一定反映 TI 的观点；请参阅 TI 的《使用条款》。

12.4 Trademarks

TI E2E™ is a trademark of Texas Instruments.
所有商标均为其各自所有者的财产。

12.5 静电放电警告

静电放电 (ESD) 会损坏这个集成电路。德州仪器 (TI) 建议通过适当的预防措施处理所有集成电路。如果不遵守正确的处理和安装程序，可能会损坏集成电路。

ESD 的损坏小至导致微小的性能降级，大至整个器件故障。精密的集成电路可能更容易受到损坏，这是因为非常细微的参数更改都可能会导致器件与其发布的规格不相符。

12.6 术语表

TI 术语表　　本术语表列出并解释了术语、首字母缩略词和定义。

13 Mechanical, Packaging, and Orderable Information

The following pages include mechanical, packaging, and orderable information. This information is the most current data available for the designated devices. This data is subject to change without notice and revision of this document. For browser-based versions of this data sheet, refer to the left-hand navigation.

Copyright © 2023 Texas Instruments Incorporated

PACKAGING INFORMATION

Orderable part number	Status (1)	Material type (2)	Package | Pins	Package qty | Carrier	RoHS (3)	Lead finish/ Ball material (4)	MSL rating/ Peak reflow (5)	Op temp (°C)	Part marking (6)
TPS3760A012DYYR	Active	Production	SOT-23-THIN (DYY) | 14	3000 | LARGE T&R	Yes	NIPDAU	Level-1-260C-UNLIM	-40 to 125	A012
TPS3760A012DYYR.A	Active	Production	SOT-23-THIN (DYY) | 14	3000 | LARGE T&R	Yes	NIPDAU	Level-1-260C-UNLIM	-40 to 125	A012
TPS3760A015DYYR	Active	Production	SOT-23-THIN (DYY) | 14	3000 | LARGE T&R	Yes	NIPDAU	Level-1-260C-UNLIM	-40 to 125	A015
TPS3760A015DYYR.A	Active	Production	SOT-23-THIN (DYY) | 14	3000 | LARGE T&R	Yes	NIPDAU	Level-1-260C-UNLIM	-40 to 125	A015
TPS3760E012DYYR	Active	Production	SOT-23-THIN (DYY) | 14	3000 | LARGE T&R	Yes	NIPDAU	Level-1-260C-UNLIM	-40 to 125	E012
TPS3760E012DYYR.A	Active	Production	SOT-23-THIN (DYY) | 14	3000 | LARGE T&R	Yes	NIPDAU	Level-1-260C-UNLIM	-40 to 125	E012
TPS3760E565DYYR	Active	Production	SOT-23-THIN (DYY) | 14	3000 | LARGE T&R	Yes	NIPDAU	Level-1-260C-UNLIM	-40 to 125	E565
TPS3760E565DYYR.A	Active	Production	SOT-23-THIN (DYY) | 14	3000 | LARGE T&R	Yes	NIPDAU	Level-1-260C-UNLIM	-40 to 125	E565

(1) **Status:** For more details on status, see our product life cycle.

(2) **Material type:** When designated, preproduction parts are prototypes/experimental devices, and are not yet approved or released for full production. Testing and final process, including without limitation quality assurance, reliability performance testing, and/or process qualification, may not yet be complete, and this item is subject to further changes or possible discontinuation. If available for ordering, purchases will be subject to an additional waiver at checkout, and are intended for early internal evaluation purposes only. These items are sold without warranties of any kind.

(3) **RoHS values:** Yes, No, RoHS Exempt. See the TI RoHS Statement for additional information and value definition.

(4) **Lead finish/Ball material:** Parts may have multiple material finish options. Finish options are separated by a vertical ruled line. Lead finish/Ball material values may wrap to two lines if the finish value exceeds the maximum column width.

(5) **MSL rating/Peak reflow:** The moisture sensitivity level ratings and peak solder (reflow) temperatures. In the event that a part has multiple moisture sensitivity ratings, only the lowest level per JEDEC standards is shown. Refer to the shipping label for the actual reflow temperature that will be used to mount the part to the printed circuit board.

(6) **Part marking:** There may be an additional marking, which relates to the logo, the lot trace code information, or the environmental category of the part.

Multiple part markings will be inside parentheses. Only one part marking contained in parentheses and separated by a "~" will appear on a part. If a line is indented then it is a continuation of the previous line and the two combined represent the entire part marking for that device.

Important Information and Disclaimer: The information provided on this page represents TI's knowledge and belief as of the date that it is provided. TI bases its knowledge and belief on information provided by third parties, and makes no representation or warranty as to the accuracy of such information. Efforts are underway to better integrate information from third parties. TI has taken and continues to take reasonable steps to provide representative and accurate information but may not have conducted destructive testing or chemical analysis on incoming materials and chemicals. TI and TI suppliers consider certain information to be proprietary, and thus CAS numbers and other limited information may not be available for release.

In no event shall TI's liability arising out of such information exceed the total purchase price of the TI part(s) at issue in this document sold by TI to Customer on an annual basis.

OTHER QUALIFIED VERSIONS OF TPS3760 :

- Automotive : TPS3760-Q1

NOTE: Qualified Version Definitions:

- Automotive - Q100 devices qualified for high-reliability automotive applications targeting zero defects

TAPE AND REEL INFORMATION

REEL DIMENSIONS

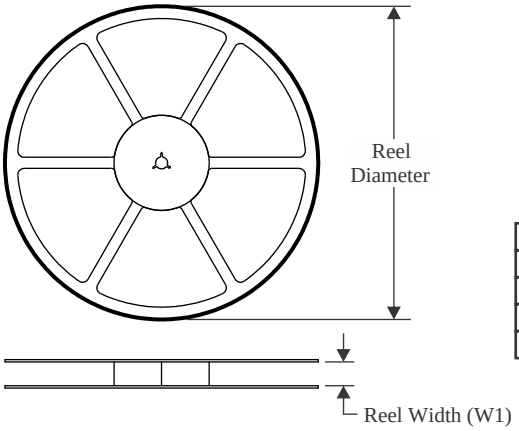

TAPE DIMENSIONS

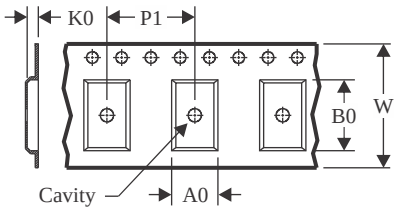

A0	Dimension designed to accommodate the component width
B0	Dimension designed to accommodate the component length
K0	Dimension designed to accommodate the component thickness
W	Overall width of the carrier tape
P1	Pitch between successive cavity centers

QUADRANT ASSIGNMENTS FOR PIN 1 ORIENTATION IN TAPE

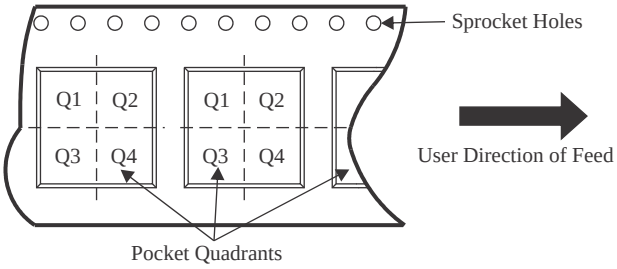

*All dimensions are nominal

Device	Package Type	Package Drawing	Pins	SPQ	Reel Diameter (mm)	Reel Width W1 (mm)	A0 (mm)	B0 (mm)	K0 (mm)	P1 (mm)	W (mm)	Pin1 Quadrant
TPS3760A012DYYR	SOT-23-THIN	DYY	14	3000	330.0	12.4	4.8	3.6	1.6	8.0	12.0	Q3
TPS3760A015DYYR	SOT-23-THIN	DYY	14	3000	330.0	12.4	4.8	3.6	1.6	8.0	12.0	Q3
TPS3760E012DYYR	SOT-23-THIN	DYY	14	3000	330.0	12.4	4.8	3.6	1.6	8.0	12.0	Q3
TPS3760E565DYYR	SOT-23-THIN	DYY	14	3000	330.0	12.4	4.8	3.6	1.6	8.0	12.0	Q3

TAPE AND REEL BOX DIMENSIONS

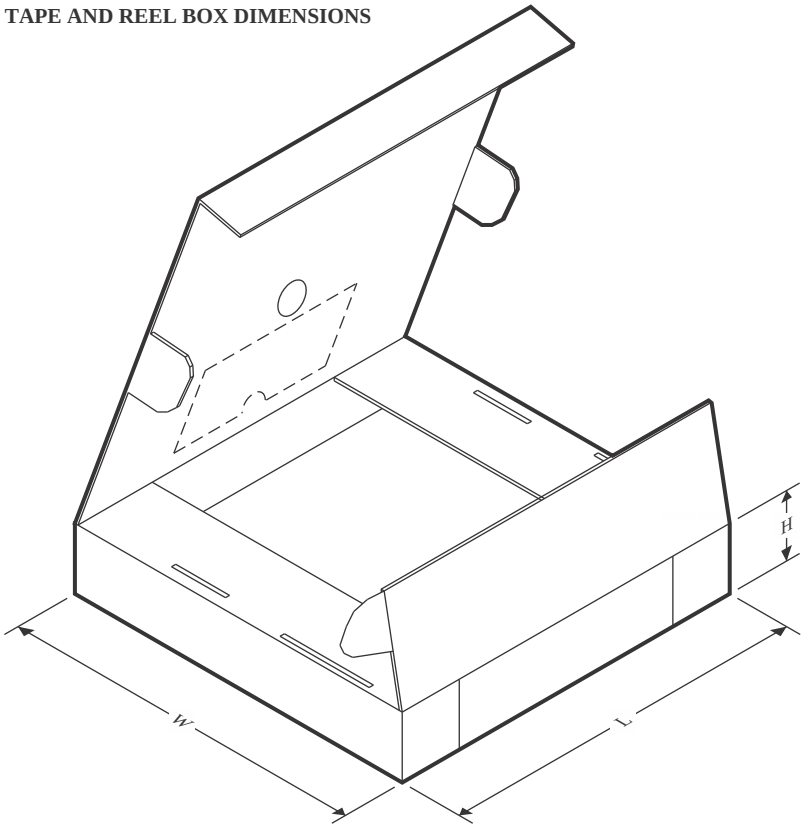

*All dimensions are nominal

Device	Package Type	Package Drawing	Pins	SPQ	Length (mm)	Width (mm)	Height (mm)
TPS3760A012DYYR	SOT-23-THIN	DYY	14	3000	336.6	336.6	31.8
TPS3760A015DYYR	SOT-23-THIN	DYY	14	3000	336.6	336.6	31.8
TPS3760E012DYYR	SOT-23-THIN	DYY	14	3000	336.6	336.6	31.8
TPS3760E565DYYR	SOT-23-THIN	DYY	14	3000	336.6	336.6	31.8

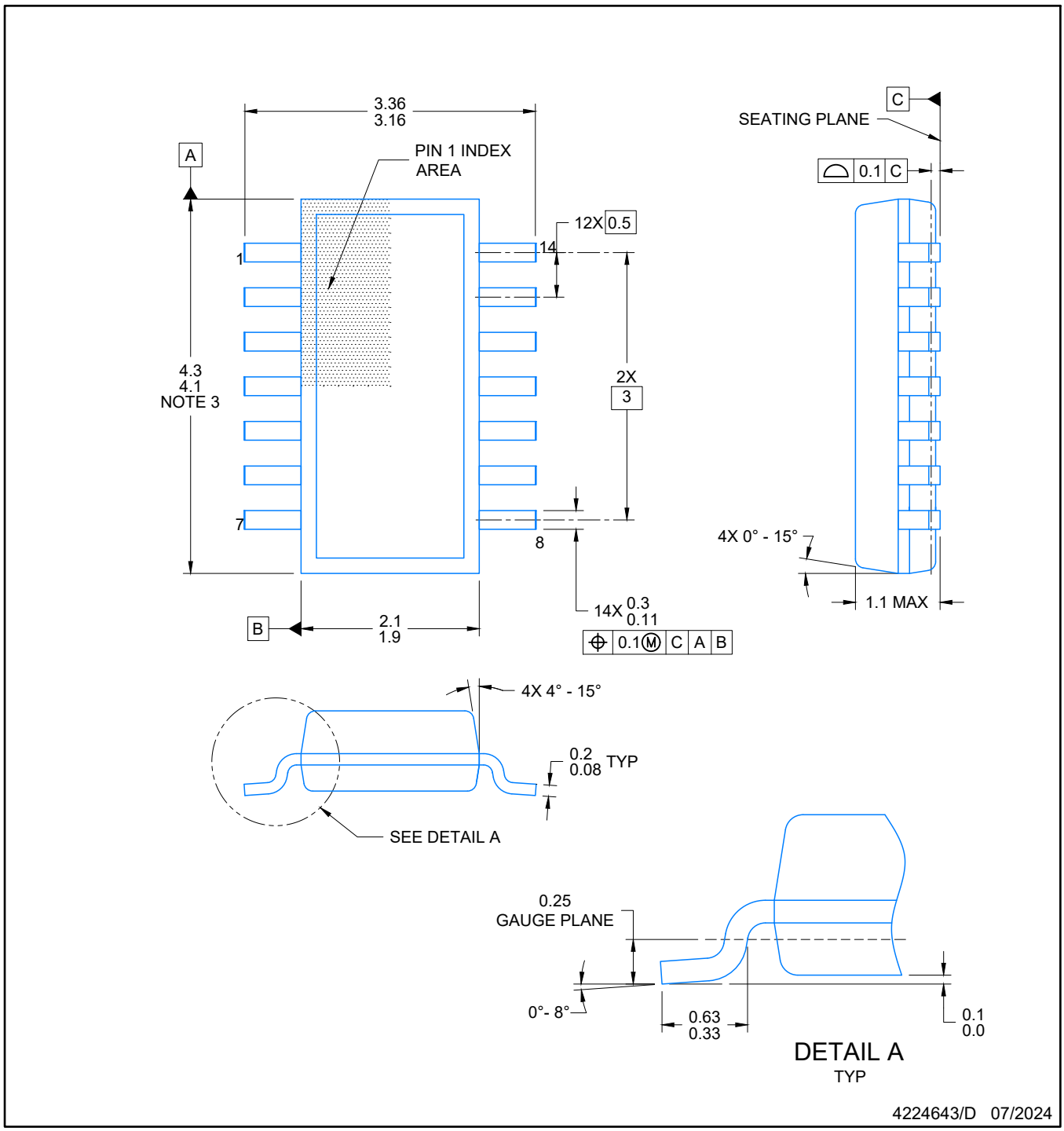

NOTES:

1. All linear dimensions are in millimeters. Any dimensions in parenthesis are for reference only. Dimensioning and tolerancing per ASME Y14.5M.
2. This drawing is subject to change without notice.
3. This dimension does not include mold flash, protrusions, or gate burrs. Mold flash, protrusions, or gate burrs shall not exceed 0.15 per side.
4. This dimension does not include interlead flash. Interlead flash shall not exceed 0.50 per side.
5. Reference JEDEC Registration MO-345, Variation AB

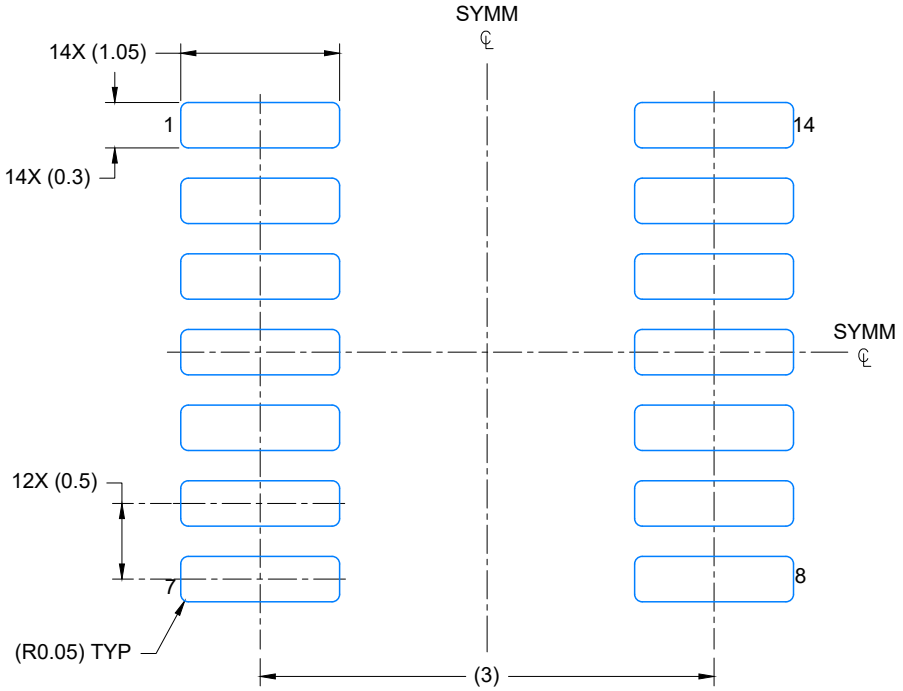

LAND PATTERN EXAMPLE
EXPOSED METAL SHOWN
SCALE: 20X

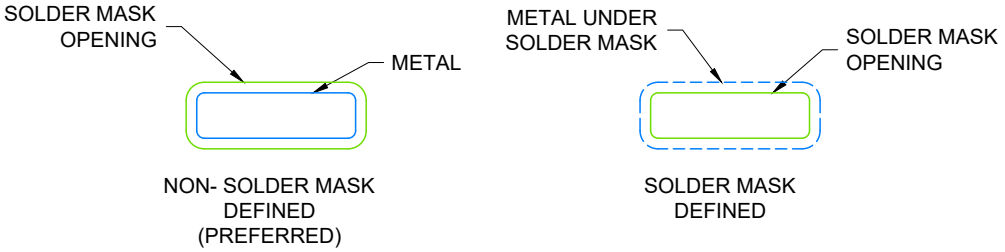

SOLDER MASK DETAILS

4224643/D 07/2024

NOTES: (continued)

6. Publication IPC-7351 may have alternate designs.
7. Solder mask tolerances between and around signal pads can vary based on board fabrication site.

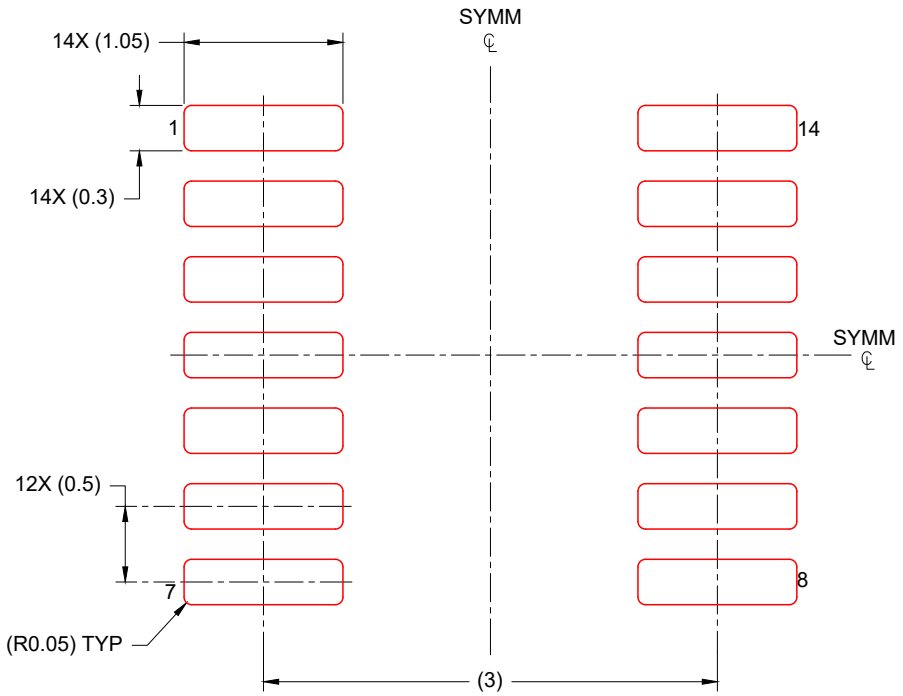

SOLDER PASTE EXAMPLE
BASED ON 0.125 mm THICK STENCIL
SCALE: 20X

4224643/D 07/2024

NOTES: (continued)

8. Laser cutting apertures with trapezoidal walls and rounded corners may offer better paste release. IPC-7525 may have alternate design recommendations.
9. Board assembly site may have different recommendations for stencil design.

重要通知和免责声明

TI“按原样”提供技术和可靠性数据（包括数据表）、设计资源（包括参考设计）、应用或其他设计建议、网络工具、安全信息和其他资源，不保证没有瑕疵且不做出任何明示或暗示的担保，包括但不限于对适销性、某特定用途方面的适用性或不侵犯任何第三方知识产权的暗示担保。

这些资源可供使用 TI 产品进行设计的熟练开发人员使用。您将自行承担以下全部责任：(1) 针对您的应用选择合适的 TI 产品，(2) 设计、验证并测试您的应用，(3) 确保您的应用满足相应标准以及任何其他功能安全、信息安全、监管或其他要求。

这些资源如有变更，恕不另行通知。TI 授权您仅可将这些资源用于研发本资源所述的 TI 产品的相关应用。 严禁以其他方式对这些资源进行复制或展示。您无权使用任何其他 TI 知识产权或任何第三方知识产权。您应全额赔偿因在这些资源的使用中对 TI 及其代表造成的任何索赔、损害、成本、损失和债务，TI 对此概不负责。

TI 提供的产品受 TI 的销售条款或 ti.com 上其他适用条款/TI 产品随附的其他适用条款的约束。TI 提供这些资源并不会扩展或以其他方式更改 TI 针对 TI 产品发布的适用的担保或担保免责声明。

TI 反对并拒绝您可能提出的任何其他或不同的条款。

邮寄地址：Texas Instruments, Post Office Box 655303, Dallas, Texas 75265
版权所有 © 2025，德州仪器 (TI) 公司