具有待机模式和故障保护功能的 TCAN1046-Q1 汽车类双路 CAN FD 收发器

1 特性

- AEC-Q100 标准：符合汽车应用要求
  - 温度等级 1：–40°C 至 125°C T_A
- 两个具有模式控制功能的独立高速 CAN FD 收发器
- 符合 ISO 11898-2:2016 和 ISO 11898-5:2007 物理层标准中的要求
- 支持传统 CAN 和经优化的 CAN FD 性能（数据速率为 2、5 和 8Mbps）
  - 具有较短的对称传播延迟时间，可增加时序裕量
  - 在负载型 CAN 网络中实现更快的数据速率
- I/O 电压范围支持 1.7V 至 5.5V
  - 支持 1.8V、2.5V、3.3V 和 5V 应用
- 保护特性：
  - 总线故障保护：±58V
  - 欠压保护
  - TXD 显性超时 (DTO)
    - 数据速率低至 9.2kbps
  - 热关断保护 (TSD)
- 工作模式：
  - 正常模式
  - 支持远程唤醒请求功能的低功耗待机模式
- 优化了未上电时的性能
  - 总线和逻辑引脚为高阻抗（运行总线或应用上无负载）
  - 支持热插拔：在总线和 RXD 输出上可实现上电/断电无干扰运行
- 结温范围：–40°C 至 150°C
- 接收器共模输入电压：±12V
- 采用 SOIC (14) 封装和无引线 VSON (14) 封装 (4.5mm x 3.0mm)，具有改进的自动光学检查 (AOI) 功能

2 应用

- 汽车和运输
  - 车身控制模块
  - 汽车网关
  - 高级驾驶辅助系统 (ADAS)
  - 信息娱乐系统

3 说明

TCAN1046-Q1 (TCAN1046) 是一款双路高速控制器局域网 (CAN) 收发器，满足 ISO 11898-2:2016 高速 CAN 规范对物理层的要求。

TCAN1046 支持传统 CAN 和 CAN FD 网络（数据速率高达 8 兆位/秒 (Mbps)）。该器件具有两个带独立电源（V_{CC1} 和 V_{CC2}）和模式控制引脚（STB1 和 STB2）的 CAN FD 通道，使每个 CAN 通道能够真正独立地运行。在需要冗余或额外 CAN FD 通道作为系统发生故障时的备份的应用中，能够独立操作每个通道的能力非常重要。

TCAN1046 包括许多保护和诊断功能，其中包括热关断 (TSD)、TXD 驱动器显性超时 (DTO) 和高达 ±58V 的总线故障保护。

器件信息

器件型号	封装(1)	封装尺寸（标称值）
TCAN1046-Q1	VSON (DMT) (14)	4.50mm x 3.00mm
	SOIC (D) (14)	8.95mm x 3.91mm

(1) 如需了解所有可用封装，请参阅数据表末尾的可订购产品附录。

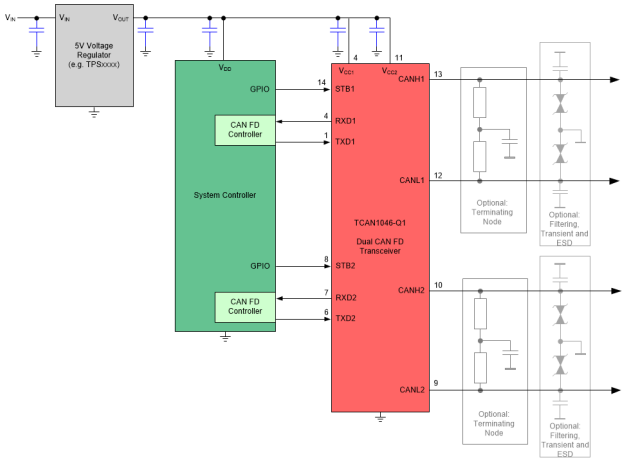

简化版原理图

本文档旨在为方便起见，提供有关 TI 产品中文版本的信息，以确认产品的概要。有关适用的官方英文版本的最新信息，请访问 www.ti.com，其内容始终优先。TI 不保证翻译的准确性和有效性。在实际设计之前，请务必参考最新版本的英文版本。

Table of Contents

1 特性 ... 1
2 应用 ... 1
3 说明 ... 1
4 Revision History ... 2
5 Pin Configuration and Functions ... 3
Pin Functions ... 3
6 Specifications ... 4
6.1 Absolute Maximum Ratings ... 4
6.2 ESD Ratings ... 4
6.3 Recommended Operating Conditions ... 4
6.4 Thermal Characteristics ... 4
6.5 Supply Characteristics ... 5
6.6 Dissipation Ratings ... 5
6.7 Electrical Characteristics ... 5
6.8 Switching Characteristics ... 7
6.9 Typical Characteristics ... 9
7 Parameter Measurement Information ... 10
8 Detailed Description ... 13
8.1 Overview ... 13
8.2 Functional Block Diagram ... 14
8.3 Feature Description ... 15
8.4 Device Functional Modes ... 18
9 Application and Implementation ... 22
9.1 Application Information ... 22
9.2 Typical Application ... 22
10 Power Supply Recommendations ... 24
11 Layout ... 25
11.1 Layout Guidelines ... 25
11.2 Layout Example ... 25
12 Device and Documentation Support ... 26
12.1 接收文档更新通知 ... 26
12.2 支持资源 ... 26
12.3 Trademarks ... 26
12.4 Electrostatic Discharge Caution ... 26
12.5 术语表 ... 26
13 Mechanical, Packaging, and Orderable Information ... 26

4 Revision History

注：以前版本的页码可能与当前版本的页码不同

Changes from Revision * (March 2020) to Revision A (September 2020)	Page
• 首次公开发布数据表	1

Copyright © 2022 Texas Instruments Incorporated

5 Pin Configuration and Functions

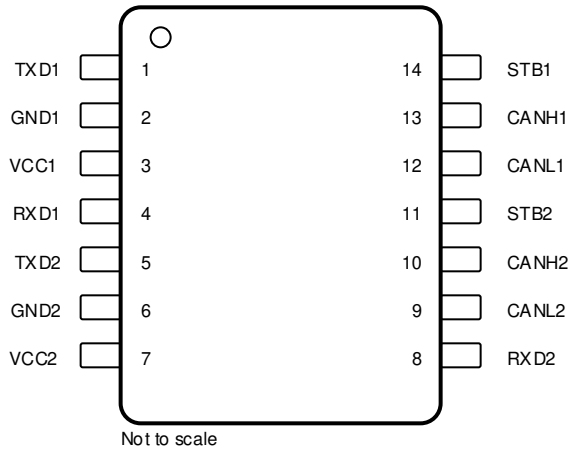

图 5-1. D Package TCAN1046-Q1, 14 Pin SOIC, Top View

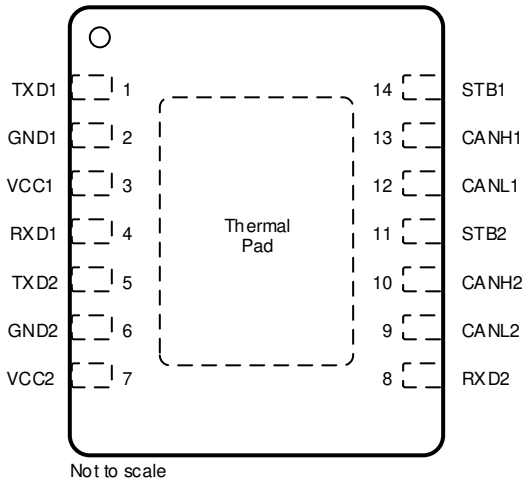

图 5-2. DMT Package TCAN1046-Q1, 14 Pin VSON, Top View

Pin Functions

Pins		Type	Description
Name	No.		
TXD1	1	Digital Input	CAN transmit data input 1, integrated pull-up
GND1	2	GND1	Ground connection, transceiver 1
V_{CC1}	3	Supply	5-V supply voltage, transceiver 1
RXD1	4	Digital Output	CAN receive data output 1, tri-state when $V_{CC} < UV_{VCC}$
TXD2	5	Digital Input	CAN transmit data input 2, integrated pull-up
GND2	6	GND2	Ground connection, transceiver 2
V_{CC2}	7	Supply	5-V supply voltage, transceiver 2
RXD2	8	Digital Output	CAN receive data output 2, tri-state when $V_{CC} < UV_{VCC}$
CANL2	9	Bus IO	Low-level CAN bus 2 input/output line
CANH2	10	Bus IO	High-level CAN bus 2 input/output line
STB2	11	Digital Input	Standby input 2 for mode control, integrated pull-up
CANL1	12	Bus IO	Low-level CAN bus 1 input/output line
CANH1	13	Bus IO	High-level CAN bus 1 input/output line
STB1	14	Digital Input	Standby input 1 for mode control, integrated pull-up
Thermal Pad (VSON only)		—	Electrically connected to GND, connect the thermal pad to the printed circuit board (PCB) ground plane for thermal relief

6 Specifications

6.1 Absolute Maximum Ratings

over operating free-air temperature range (unless otherwise noted)[(1) (2)]

		MIN	MAX	UNIT
V_{CC1}, V_{CC2}	Supply voltage	-0.3	6	V
V_{BUS}	CAN Bus IO voltage CANH1, CANL1 & CANH2, CANL2	– 58	58	V
V_{DIFF}	Max differential voltage between CANH1, CANL1 & CANH2, CANL2	– 45	45	V
V_{Logic_Input}	Logic input terminal voltage	– 0.3	6	V
V_{RXD}	RXD output terminal voltage range (V_{RXD1}, V_{RXD2})	– 0.3	6	V
$I_{O(RXD)}$	RXD output current (I_{ORXD1}, I_{ORXD2})	– 8	8	mA
T_J	Operating virtual junction temperature range	– 40	150	°C
T_{STG}	Storage temperature	– 65	150	°C

(1) Stresses beyond those listed under *Absolute Maximum Ratings* may cause permanent damage to the device. These are stress ratings only, which do not imply functional operation of the device at these or any other conditions beyond those indicated under *Recommended Operating Conditions*. Exposure to absolute-maximum-rated conditions for extended periods may affect device reliability.
(2) All voltage values, except differential IO bus voltages, are with respect to ground terminal.

6.2 ESD Ratings

				VALUE	UNIT
V_{ESD}	Electrostatic discharge	Human-body model (HBM), per AEC Q100-002[(1)]	HBM classification level 3A for all pins	±3000	V
			HBM classification level 3B for global pins CANH & CANL	±10000	V
		Charged-device model (CDM), per AEC Q100-011 CDM classification level C5 for all pins		±750	V

(1) AEC Q100-002 indicates that HBM stressing shall be in accordance with the ANSI/ESDA/JEDEC JS-001 specification.

6.3 Recommended Operating Conditions

		MIN	NOM	MAX	UNIT
V_{CC1}, V_{CC2}	Supply voltage	4.5	5	5.5	V
$I_{OH(RXD)}$	RXD terminal high level output current – $I_{OH(RXD1)}$ & $I_{OH(RXD2)}$	– 2			mA
$I_{OL(RXD)}$	RXD terminal low level output current – $I_{OL(RXD1)}$ & $I_{OL(RXD2)}$			2	mA
T_A	Operating ambient temperature	– 40		125	℃

6.4 Thermal Characteristics

THERMAL METRIC[(1)]		TCAN1046-Q1		UNIT
		D (SOIC)	DMT (VSON)	
$R_{\theta JA}$	Junction-to-ambient thermal resistance	70.6	35.5	℃/W
$R_{\theta JC(top)}$	Junction-to-case (top) thermal resistance	33.4	38.1	℃/W
$R_{\theta JB}$	Junction-to-board thermal resistance	34.0	13.4	℃/W
Ψ_{JT}	Junction-to-top characterization parameter	5.0	1.9	℃/W
Ψ_{JB}	Junction-to-board characterization parameter	32.6	13.4	℃/W
$R_{\theta JC(bot)}$	Junction-to-case (bottom) thermal resistance	–	3.5	℃/W

(1) For more information about traditional and new thermal metrics, see the Semiconductor and IC Package Thermal Metrics application report.

Copyright © 2022 Texas Instruments Incorporated

6.5 Supply Characteristics

Over recommended operating conditions with T_A = -40℃ to 125℃ (unless otherwise noted)

PARAMETER			TEST CONDITIONS	MIN	TYP	MAX	UNIT
I_{CC}	Supply current Normal mode Per transceiver	Dominant	TXD = 0 V, STB = 0 V, R_L = 60 Ω, C_L = open See 图 7-1		45	70	mA
			TXD = 0 V, STB = 0 V, R_L = 50 Ω, C_L = open See 图 7-1		49	80	mA
		Recessive	TXD = V_{CC}, STB = 0 V, R_L = 50 Ω, C_L = open See 图 7-1		4.5	7.5	mA
		Dominant with bus fault	TXD = 0 V, STB = 0 V, CANH = CANL = ±25 V, R_L = open, C_L = open See 图 7-1			130	mA
I_{CC}	Supply current Standby mode Per transceiver		TXD = STB = V_{CC}, R_L = 50 Ω, C_L = open See 图 7-1			14.5	µA
UV_{VCC}	Rising under voltage detection on V_{CC} for protected mode				4.2	4.4	V
UV_{VCC}	Falling under voltage detection on V_{CC} for protected mode			3.5	4	4.25	V

6.6 Dissipation Ratings

PARAMETER		TEST CONDITIONS	MIN	TYP	MAX	UNIT
P_D	Average power dissipation Normal mode Per transceiver	V_{CC} = 5 V, T_J= 27°C, R_L = 60 Ω, TXD input = 250 kHz 50% duty cycle squarewave, C_{L_RXD} = 15 pF		110		mW
		V_{CC} = 5 V, T_J= 27°C, R_L = 60 Ω, TXD input = 250 kHz 50% duty cycle squarewave, C_{L_RXD} = 15 pF		110		mW
		V_{CC} = 5 V, T_J= 27°C, R_L = 60 Ω, TXD input = 250 kHz 50% duty cycle squarewave, C_{L_RXD} = 15 pF		110		mW
		V_{CC} = 5.5 V, T_A= 125°C, R_L = 60 Ω, TXD input = 2.5 MHz 50% duty cycle squarewave, C_{L_RXD} = 15 pF		120		mW
		V_{CC} = 5.5 V, T_A= 125°C, R_L = 60 Ω, TXD input = 2.5 MHz 50% duty cycle squarewave, C_{L_RXD} = 15 pF		120		mW
		V_{CC} = 5.5 V, T_A= 125°C, R_L = 60 Ω, TXD input = 2.5 MHz 50% duty cycle squarewave, C_{L_RXD} = 15 pF		120		mW
T_{TSD}	Thermal shutdown temperature(1)		170	192	205	°C
T_{TSD_HYS}	Thermal shutdown hysteresis			10		°C

(1) Specified by design

6.7 Electrical Characteristics

Over recommended operating conditions with T_A = -40℃ to 125℃ (unless otherwise noted); CAN electrical parameters apply to both channels

PARAMETER			TEST CONDITIONS	MIN	TYP	MAX	UNIT
Driver Electrical Characteristics							
$V_{O(DOM)}$	Dominant output voltage Normal mode	CANH	TXD = 0 V, STB = 0 V , 50 Ω ≤ R_L ≤ 65 Ω, C_L = open, R_{CM} = open See 图 7-2 and 图 8-3,	2.75		4.5	V
		CANL		0.5		2.25	V
$V_{O(REC)}$	Recessive output voltage Normal mode	CANH and CANL	TXD = V_{CC}, STB = 0 V , R_L = open (no load), R_{CM} = open See 图 7-2 and 图 8-3	2	0.5 V_{CC}	3	V

6.7 Electrical Characteristics (continued)

Over recommended operating conditions with T_A = -40℃ to 125℃ (unless otherwise noted); CAN electrical parameters apply to both channels

PARAMETER			TEST CONDITIONS	MIN	TYP	MAX	UNIT
V_{SYM}	Driver symmetry $(V_{O(CANH)} + V_{O(CANL)})/V_{CC}$		STB = 0 V , R_L = 60 Ω, C_{SPLIT} = 4.7 nF, C_L = open, R_{CM} = open, TXD = 250 kHz, 1 MHz, 2.5 MHz See 图 7-2 and 图 9-2	0.9		1.1	V/V
V_{SYM_DC}	DC output symmetry $(V_{CC} - V_{O(CANH)} - V_{O(CANL)})$		STB = 0 V , R_L = 60 Ω, C_L = open See 图 7-2 and 图 8-3	–400		400	mV
$V_{OD(DOM)}$	Differential output voltage Normal mode Dominant	CANH - CANL	TXD = 0 V, STB = 0 V , 50 Ω ≤ R_L ≤ 65 Ω, C_L = open See 图 7-2 and 图 8-3	1.5		3	V
			TXD = 0 V, STB = 0 V , 45 Ω ≤ R_L ≤ 70 Ω, C_L = open See 图 7-2 and 图 8-3	1.4		3.3	V
			TXD = 0 V, STB = 0 V , R_L = 2240 Ω, C_L = open See 图 7-2 and 图 8-3	1.5		5	V
$V_{OD(REC)}$	Differential output voltage Normal mode Recessive	CANH - CANL	TXD = V_{CC}, STB = 0 V , R_L = 60 Ω, C_L = open See 图 7-2 and 图 8-3	–120		12	mV
			TXD = V_{CC}, STB = 0 V , R_L = open, C_L = open See 图 7-2 and 图 8-3	–50		50	mV
$V_{O(STB)}$	Bus output voltage Standby mode	CANH	STB = V_{CC} , R_L = open (no load) See 图 7-2 and 图 8-3	-0.1		0.1	V
		CANL		-0.1		0.1	V
		CANH - CANL		-0.2		0.2	V
$I_{OS(SS_DOM)}$	Short-circuit steady-state output current, dominant Normal mode		STB = 0 V , $V_{(CANH)}$ = -15 V to 40 V, CANL = open, TXD = 0 V See 图 7-7 and 图 8-3	–115			mA
			STB = 0 V , $V_{(CAN_L)}$ = -15 V to 40 V, CANH = open, TXD = 0 V See 图 7-7 and 图 8-3			115	mA
$I_{OS(SS_REC)}$	Short-circuit steady-state output current, recessive Normal mode		STB = 0 V , –27 V ≤ V_{BUS} ≤ 32 V, where V_{BUS} = CANH = CANL, TXD = V_{CC} See 图 7-7 and 图 8-3	–5		5	mA
Receiver Electrical Characteristics							
V_{IT}	Input threshold voltage Normal mode		STB = 0 V , -12 V ≤ V_{CM} ≤ 12 V See 图 7-3, 图 7-3, and 表 8-5	500		900	mV
$V_{IT(STB)}$	Input threshold Standby mode		STB = V_{CC} See 表 8-5	400		1150	mV
V_{DOM}	Dominant state differential input voltage range Normal mode		STB = 0 V , -12 V ≤ V_{CM} ≤ 12 V See 图 7-3, and 表 8-5	0.9		9	V
V_{REC}	Recessive state differential input voltage range Normal mode		STB = 0 V , -12 V ≤ V_{CM} ≤ 12 V See 图 7-3, and 表 8-5	-4		0.5	V
$V_{DOM(STB)}$	Dominant state differential input voltage range Standby mode		STB = V_{CC} , -12 V ≤ V_{CM} ≤ 12 V See 表 8-5	1.15		9	V
$V_{REC(STB)}$	Recessive state differential input voltage range Standby mode		STB = V_{CC} , -12 V ≤ V_{CM} ≤ 12 V See 表 8-5	-4		0.4	V
V_{HYS}	Hysteresis voltage for input threshold Normal mode		STB = 0 V , -12 V ≤ V_{CM} ≤ 12 V See 图 7-3, and 表 8-5		100		mV
V_{CM}	Common mode range Normal and standby modes		See 图 7-3 and 表 8-5	–12		12	V
$I_{LKG(OFF)}$	Unpowered bus input leakage current		CANH = CANL = 5 V, V_{CC} = GND			5	μA
C_I	Input capacitance to ground (CANH or CANL)		TXD = V_{CC}			20	pF
C_{ID}	Differential input capacitance					10	pF
R_{ID}	Differential input resistance		TXD = V_{CC}, STB = 0 V , -12 V ≤ V_{CM} ≤ 12 V	40		90	kΩ
R_{IN}	Single ended input resistance (CANH or CANL)			20		45	kΩ

Copyright © 2022 Texas Instruments Incorporated

6.7 Electrical Characteristics (continued)

Over recommended operating conditions with T_A = -40℃ to 125℃ (unless otherwise noted); CAN electrical parameters apply to both channels

PARAMETER		TEST CONDITIONS	MIN	TYP	MAX	UNIT
$R_{IN(M)}$	Input resistance matching [1 – ($R_{IN(CANH)}$ / $R_{IN(CANL)}$)] × 100 %	$V_{(CAN_H)}$ = $V_{(CAN_L)}$ = 5 V	–1		1	%
TXD Terminal (CAN Transmit Data Input)						
V_{IH}	High-level input voltage		0.7 V_{CC}			V
V_{IL}	Low-level input voltage				0.3 V_{CC}	V
I_{IH}	High-level input leakage current	TXD = V_{CC} = 5.5 V	–2.5	0	1	µA
I_{IL}	Low-level input leakage current	TXD = 0 V, V_{CC} = 5.5 V	–200	-100	–20	µA
$I_{LKG(OFF)}$	Unpowered leakage current	TXD = 5.5 V, V_{CC} = 0 V	–1	0	1	µA
C_I	Input Capacitance	V_{IN} = 0.4×sin(2×π×2×10^6×t)+2.5 V		5		pF
RXD Terminal (CAN Receive Data Output)						
V_{OH}	High-level output voltage	I_O = –2 mA, See 图 7-3	0.8 V_{CC}			V
V_{OL}	Low-level output voltage	I_O = +2 mA, See 图 7-3			0.2 V_{CC}	V
$I_{LKG(OFF)}$	Unpowered leakage current	RXD = 5.5 V, V_{CC} = 0 V	–1	0	1	µA
STB Terminal (Standby Mode Input)						
V_{IH}	High-level input voltage		0.7 V_{CC}			V
V_{IL}	Low-level input voltage				0.3 V_{CC}	V
I_{IH}	High-level input leakage current	V_{CC} = STB = 5.5 V	–2		2	µA
I_{IL}	Low-level input leakage current	V_{CC} = 5.5 V, STB = 0 V	–20		–2	µA
$I_{LKG(OFF)}$	Unpowered leakage current	STB = 5.5V, V_{CC} = 0 V	–1	0	1	µA

6.8 Switching Characteristics

Over recommended operating conditions with T_A = -40℃ to 125℃ (unless otherwise noted); Timing parameters apply to both CAN channels

PARAMETER		TEST CONDITIONS	MIN	TYP	MAX	UNIT
Device Switching Characteristics						
$t_{PROP(LOOP1)}$	Total loop delay, driver input (TXD) to receiver output (RXD), recessive to dominant	Normal mode, R_L = 60 Ω, C_L = 100 pF, $C_{L(RXD)}$ = 15 pF See 图 7-4		125	210	ns
$t_{PROP(LOOP2)}$	Total loop delay, driver input (TXD) to receiver output (RXD), dominant to recessive	Normal mode, R_L = 60 Ω, C_L = 100 pF, $C_{L(RXD)}$ = 15 pF See 图 7-4		150	210	ns
t_{MODE}	Mode change time, from normal to standby or from standby to normal	See 图 7-5			20	µs
t_{WK_FILTER}	Filter time for a valid wake-up pattern	See 图 8-5	0.5		1.8	µs
$t_{WK_TIMEOUT}$	Bus wake-up timeout	See 图 8-5	0.8		6	ms
Driver Switching Characteristics						
t_{pHR}	Propagation delay time, high TXD to driver recessive (dominant to recessive)(1)	STB = 0 V , R_L = 60 Ω, C_L = 100 pF See 图 7-2 and 图 7-6	35	80	115	ns
t_{pLD}	Propagation delay time, low TXD to driver dominant (recessive to dominant)(1)		20	70	120	ns
$t_{sk(p)}$	Pulse skew (|tpHR - tpLD|)			20		ns
t_R	Differential output signal rise time			30		ns
t_F	Differential output signal fall time			50		ns
t_{TXD_DTO}	Dominant timeout		1.2		4.0	ms
Receiver Switching Characteristics						

6.8 Switching Characteristics (continued)

Over recommended operating conditions with T_A = -40℃ to 125℃ (unless otherwise noted); Timing parameters apply to both CAN channels

PARAMETER		TEST CONDITIONS	MIN	TYP	MAX	UNIT
t_{pRH}	Propagation delay time, bus recessive input to high output (dominant to recessive)[1]	STB = 0 V , $C_{L(RXD)}$ = 15 pF See 图 7-3	40	90	150	ns
t_{pDL}	Propagation delay time, bus dominant input to low output (recessive to dominant)[1]		35	65	140	ns
t_R	RXD output signal rise time			10		ns
t_F	RXD output signal fall time			10		ns
[1]**FD Timing Characteristics**						
$t_{BIT(BUS)}$	Bit time on CAN bus output pins $t_{BIT(TXD)}$ = 500 ns	STB = 0 V, R_L = 60 Ω, C_L = 100 pF, $C_{L(RXD)}$ = 15 pF $\Delta t_{REC} = t_{BIT(RXD)} - t_{BIT(BUS)}$ See 图 7-4	460		510	ns
$t_{BIT(BUS)}$	Bit time on CAN bus output pins $t_{BIT(TXD)}$ = 200 ns		160		210	ns
$t_{BIT(RXD)}$	Bit time on RXD output pins $t_{BIT(TXD)}$ = 500 ns		445		515	ns
$t_{BIT(RXD)}$	Bit time on RXD output pins $t_{BIT(TXD)}$ = 200 ns		145		215	ns
Δt_{REC}	Receiver timing symmetry $t_{BIT(TXD)}$ = 500 ns		-35		15	ns
Δt_{REC}	Receiver timing symmetry $t_{BIT(TXD)}$ = 200 ns		-35		15	ns

(1) Specified by design and characterization

Copyright © 2022 Texas Instruments Incorporated

6.9 Typical Characteristics

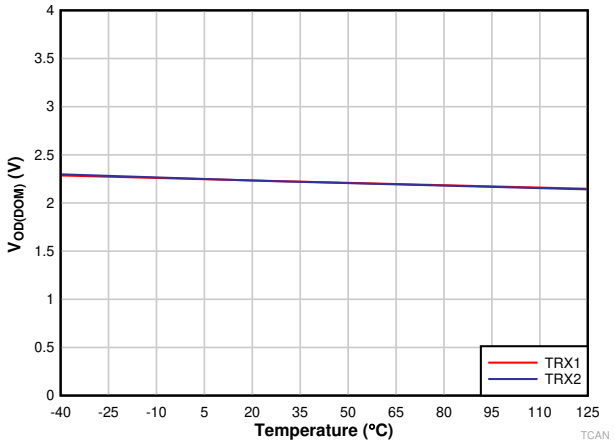

备注

V_{CC} = 5 V　　R_L = 60 Ω

图 6-1. $V_{OD(DOM)}$ vs Temperature Transceiver 1 and Transceiver 2

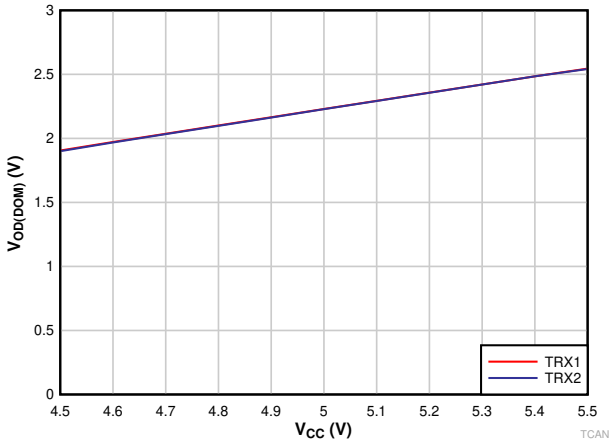

备注

Temp = 25°C　　R_L = 60 Ω

图 6-2. $V_{OD(DOM)}$ vs V_{CC} Transceiver 1 and Transceiver 2

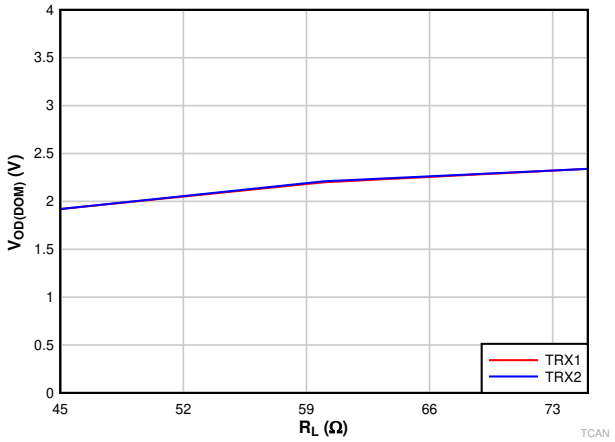

备注

V_{CC} = 5 V　　Temp = 25°C

图 6-3. $V_{OD(DOM)}$ vs Load Transceiver 1 and Transceiver 2

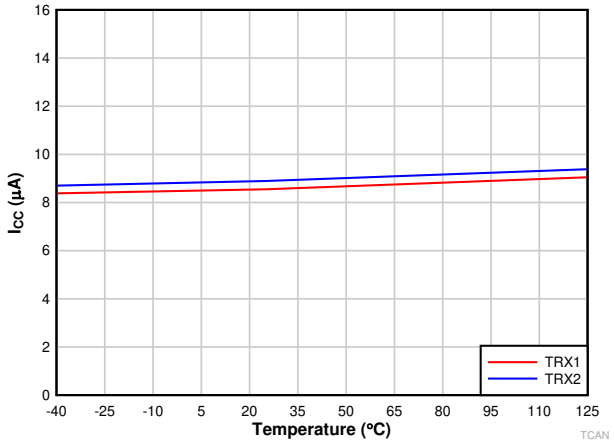

备注

V_{CC} = 5 V　　R_L = 60 Ω

图 6-4. I_{CC} Standby vs Temperature Transceiver 1 and Transceiver 2

7 Parameter Measurement Information

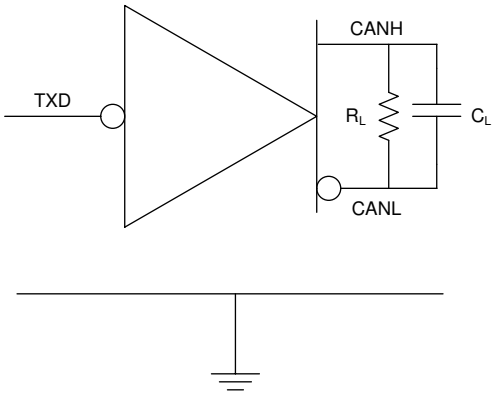

图 7-1. I_{CC} Test Circuit

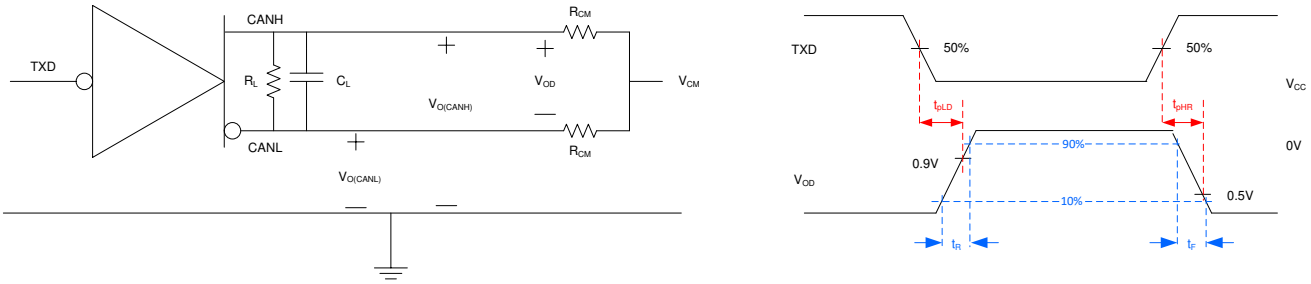

图 7-2. Driver Test Circuit and Measurement

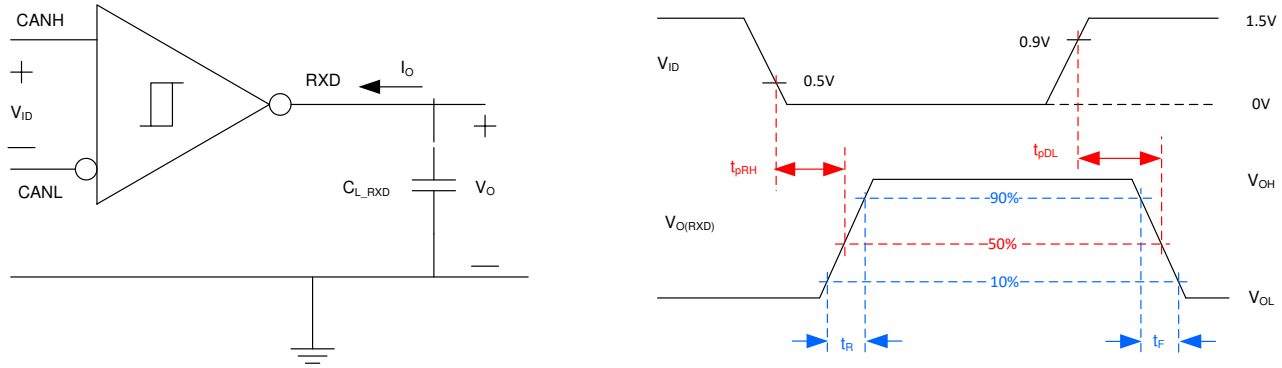

图 7-3. Receiver Test Circuit and Measurement

Copyright © 2022 Texas Instruments Incorporated

表 7-1. Receiver Differential Input Voltage Threshold Test

Input (See 图 7-3)			Output	
V_{CANH}	V_{CANL}	$\|V_{ID}\|$	RXD	
-11.5 V	-12.5 V	1000 mV	Low	V_{OL}
12.5 V	11.5 V	1000 mV		
-8.55 V	-9.45 V	900 mV		
9.45 V	8.55 V	900 mV		
-8.75 V	-9.25 V	500 mV	High	V_{OH}
9.25 V	8.75 V	500 mV		
-11.8 V	-12.2 V	400 mV		
12.2 V	11.8 V	400 mV		
Open	Open	X		

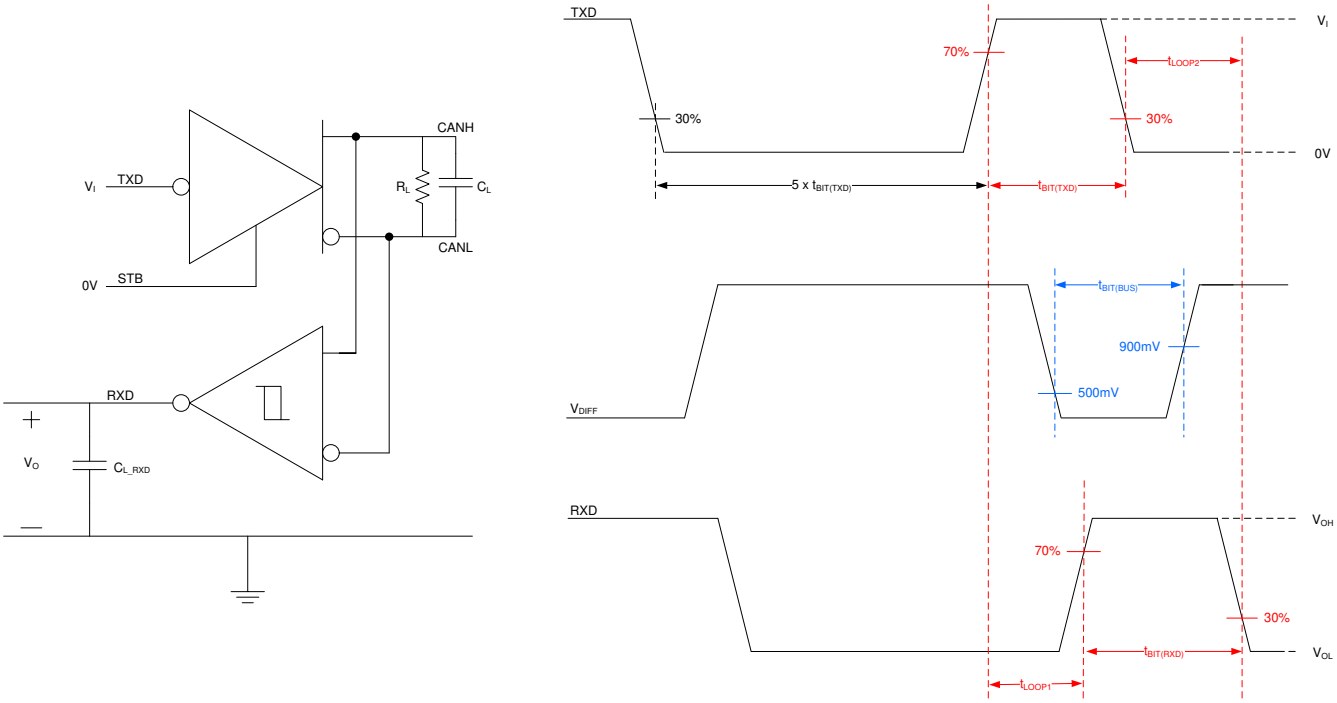

图 7-4. Transmitter and Receiver Timing Test Circuit and Measurement

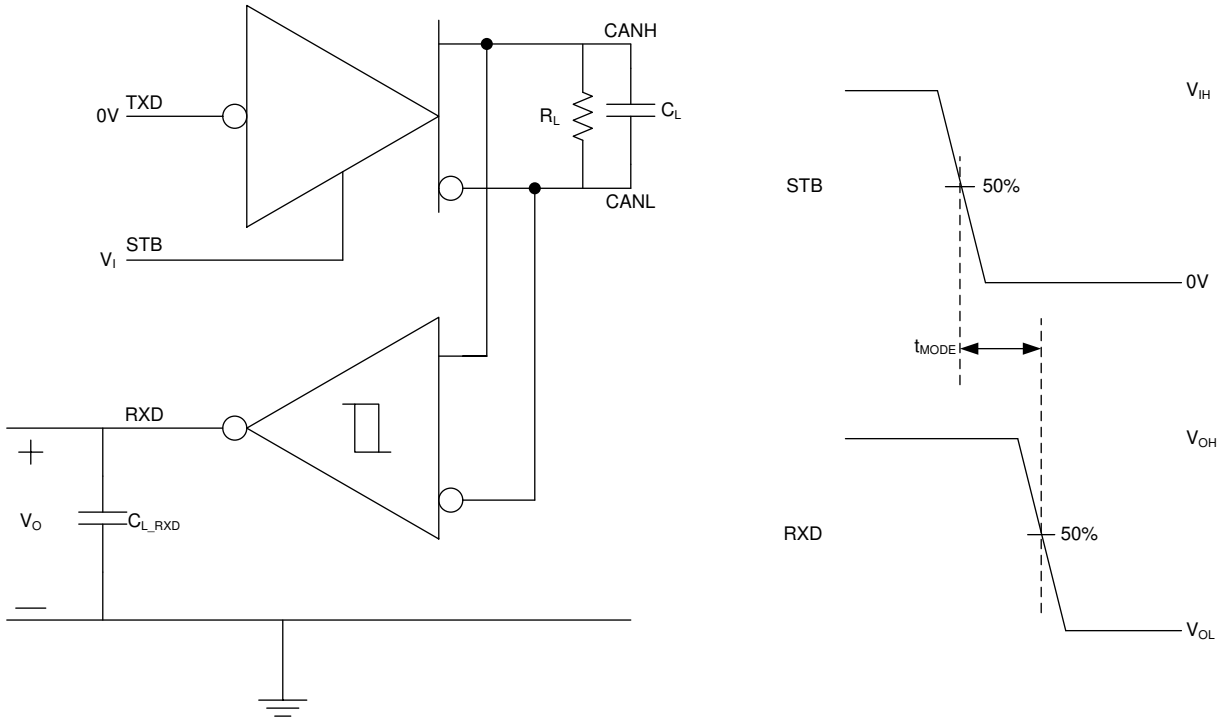

图 7-5. t_{MODE} Test Circuit and Measurement

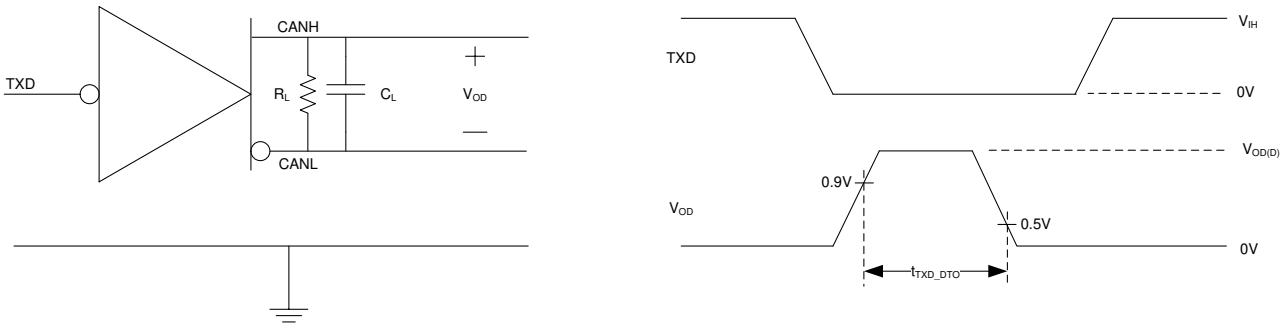

图 7-6. TXD Dominant Timeout Test Circuit and Measurement

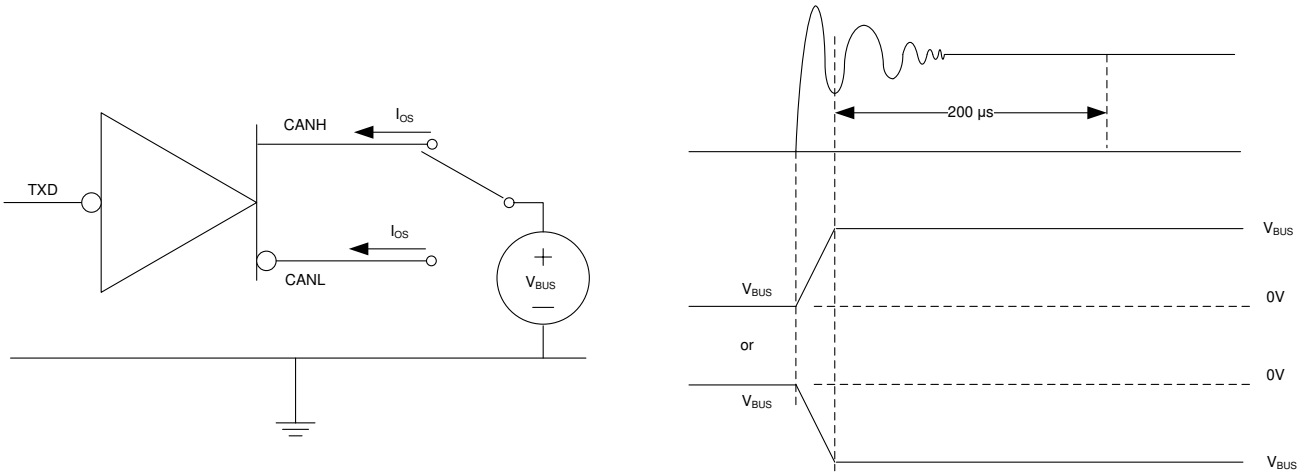

图 7-7. Driver Short-Circuit Current Test and Measurement

Copyright © 2022 Texas Instruments Incorporated

8 Detailed Description

8.1 Overview

The TCAN1046 meets or exceeds the specifications of the ISO 11898-2:2016 high speed CAN (Controller Area Network) physical layer standard. The device has been certified to the requirements of ISO 11898-2:2016 and ISO 11898-5:2007 physical layer requirements according to the GIFT/ICT high speed CAN test specification. The transceiver provides a number of different protection features making it ideal for the stringent automotive system requirements while also supporting CAN FD data rates up to 8 Mbps.

The TCAN1046 conforms to the following CAN standards:

- CAN transceiver physical layer standards:
  - ISO 11898-2:2016 High speed medium access unit
  - ISO 11898-5:2007 High speed medium access unit with low-power mode
  - SAE J2284-1: High Speed CAN (HSC) for Vehicle Applications at 125 kbps
  - SAE J2284-2: High Speed CAN (HSC) for Vehicle Applications at 250 kbps
  - SAE J2284-3: High Speed CAN (HSC) for Vehicle Applications at 500 kbps
  - SAE J2284-4: High-Speed CAN (HSC) for Vehicle Applications at 500 kbps with CAN FD Data at 2 Mbps
  - SAE J2284-5: High-Speed CAN (HSC) for Vehicle Applications at 500 kbps with CAN FD Data at 5 Mbps
  - ARINC 825-4 General Standardization of CAN (Controller Area Network) Bus Protocol For Airborne Use
- Conformance test requirements:
  - ISO 16845-2 Road vehicles – Controller area network (CAN) conformance test plan Part 2: High-speed medium access unit conformance test plan

8.2 Functional Block Diagram

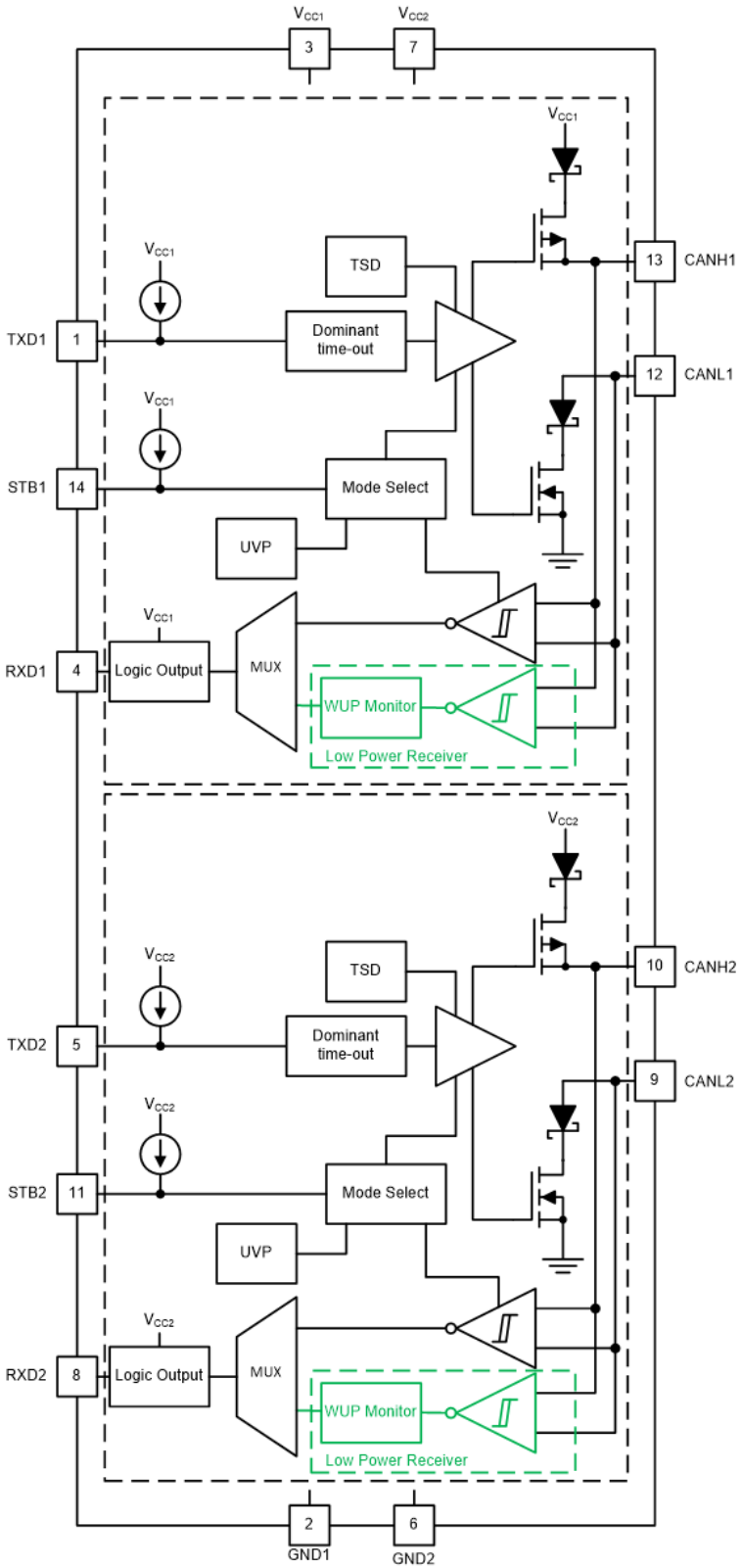

图 8-1. Block Diagram

Copyright © 2022 Texas Instruments Incorporated

8.3 Feature Description

8.3.1 Pin Description

8.3.1.1 TXD1 and TXD2

TXD1 and TXD2 are the logic-level input signals, referenced to V_{CC}, from a CAN controller to the TCAN1046.

8.3.1.2 GND1 and GND2

GND1 and GND2 are ground pins of the transceiver, both must be connected to the PCB ground.

8.3.1.3 V_{CC1} and V_{CC2}

V_{CC1} and V_{CC2} provide the 5-V nominal power supply input to their respective CAN transceiver.

8.3.1.4 RXD1 and RXD2

RXD1 and RXD2 are the logic-level output signals from the TCAN1046 to a CAN controller.

8.3.1.5 CANH1, CANL1, CANH2, and CANL1

These are the CAN high and CAN low differential bus pins. These pins are connected to the CAN transceiver and the low-voltage WUP CAN receiver.

8.3.1.6 STB1 and STB2 (Standby)

The STB1 and STB2 are input pins used for mode control of the TCAN1046. STB1 and STB2 can be supplied from either the system processor or from a static system voltage source. If normal mode is the only intended mode of operation than the STB pins can be tied directly to GND.

8.3.2 CAN Bus States

The CAN bus has two logical states during operation: recessive and dominant. See 图 8-2 and 图 8-3.

A dominant bus state occurs when the bus is driven differentially and corresponds to a logic low on the TXD1, TXD2, RXD1 and RXD2 pins. A recessive bus state occurs when the bus is biased to $V_{CC}/2$ via the high-resistance internal input resistors R_{IN}) of the receiver and corresponds to a logic high on the TXD1, TXD2, RXD1 and RXD2 pins.

A dominant state overwrites the recessive state during arbitration. Multiple CAN nodes may be transmitting a dominant bit at the same time during arbitration, and in this case the differential voltage of the bus is greater than the differential voltage of a single driver.

The TCAN1046 transceiver implements a low-power standby (STB) mode which enables a third bus state where the bus pins are weakly biased to ground via the high resistance internal resistors of the receiver. See 图 8-2 and 图 8-3.

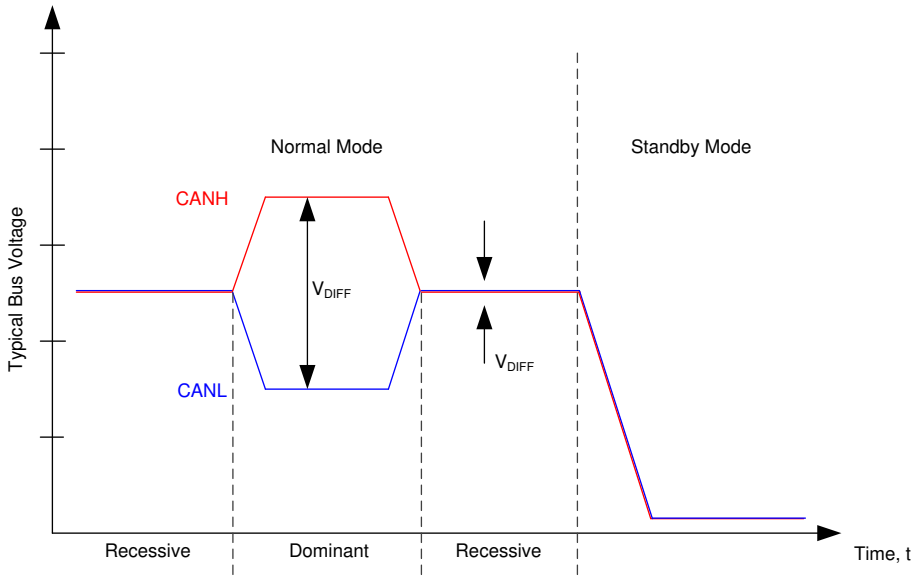

图 8-2. Bus States

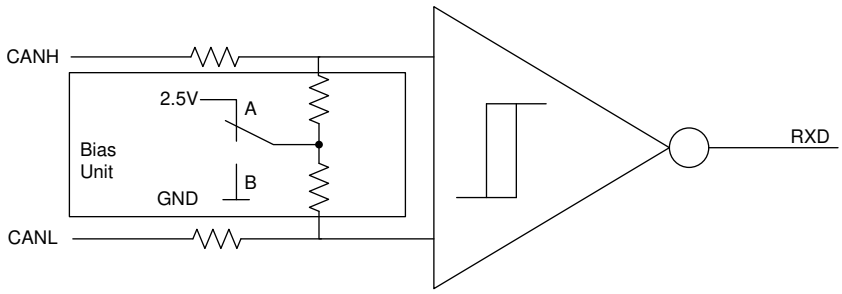

A. Normal Mode
B. Standby Mode

图 8-3. Simplified Recessive Common Mode Bias Unit and Receiver

8.3.3 TXD Dominant Timeout (DTO)

During normal mode, the only mode where the CAN driver is active, the TXD DTO circuit prevents the local node from blocking network communication in the event of a hardware or software failure where TXD is held dominant longer than the timeout period t_{TXD_DTO}. The TXD DTO circuit is triggered by a falling edge on TXD. If no rising edge is seen before the timeout period of the circuit, t_{TXD_DTO}, the CAN driver is disabled. This frees the bus for communication between other nodes on the network. The CAN driver is reactivated when a recessive signal is seen on the TXD pin, thus clearing the dominant timeout. The receiver remains active and biased to $V_{CC}/2$ and the RXD output reflects the activity on the CAN bus during the TXD DTO fault.

The minimum dominant TXD time allowed by the TXD DTO circuit limits the minimum possible transmitted data rate of the device. The CAN protocol allows a maximum of eleven successive dominant bits (on TXD) for the worst case, where five successive dominant bits are followed immediately by an error frame. The minimum transmitted data rate may be calculated using 方程式 1.

$$\text{Minimum Data Rate} = 11 \text{ bits} / t_{TXD_DTO} = 11 \text{ bits} / 1.2 \text{ ms} = 9.2 \text{ kbps} \quad (1)$$

Copyright © 2022 Texas Instruments Incorporated

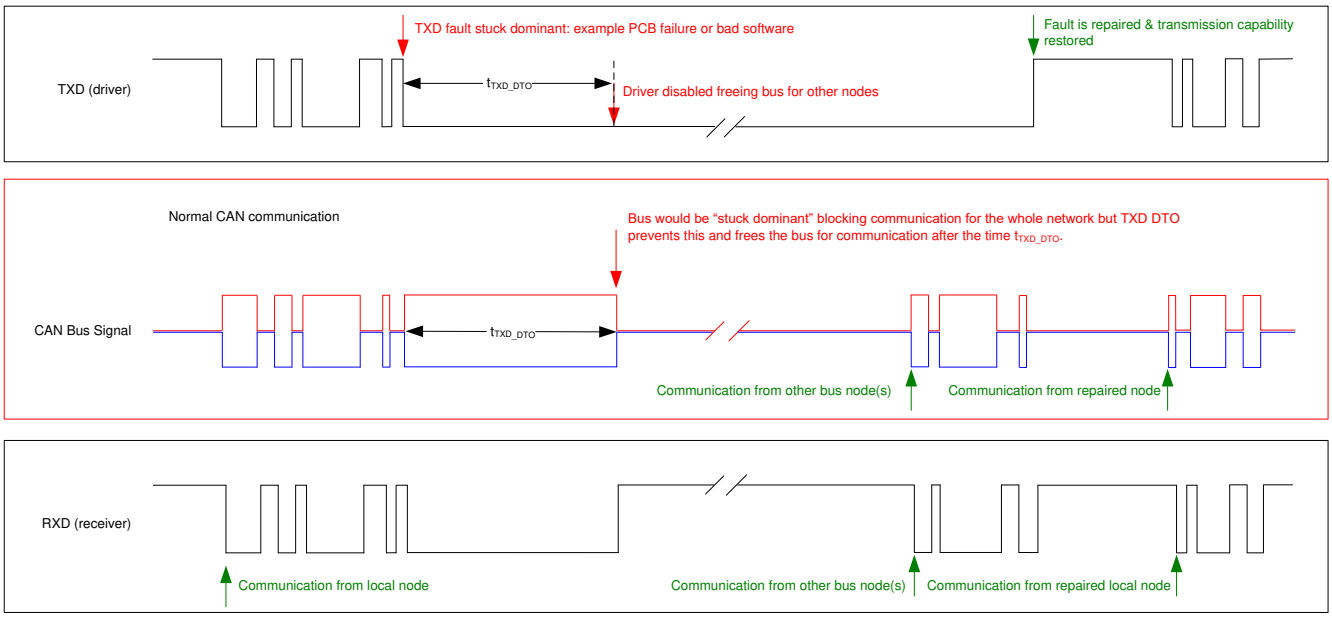

图 8-4. Example Timing Diagram for TXD Dominant Timeout

8.3.4 CAN Bus Short Circuit Current Limiting

The TCAN1046 has several protection features that limit the short circuit current when a CAN bus line is shorted. These include CAN driver current limiting in the dominant and recessive states and TXD dominant state timeout which prevents permanently having the higher short circuit current of a dominant state in case of a system fault. During CAN communication the bus switches between the dominant and recessive states, thus the short circuit current may be viewed as either the current during each bus state or as a DC average current. When selecting termination resistors or a common mode choke for the CAN design the average power rating, $I_{OS(AVG)}$, should be used. The percentage dominant is limited by the TXD DTO and the CAN protocol which has forced state changes and recessive bits due to bit stuffing, control fields, and interframe space. These ensure there is a minimum amount of recessive time on the bus even if the data field contains a high percentage of dominant bits.

The average short circuit current of the bus depends on the ratio of recessive to dominant bits and their respective short circuit currents. The average short circuit current may be calculated using 方程式 2.

$$I_{OS(AVG)} = \%\ Transmit \times [(\%\ REC_Bits \times I_{OS(SS)_REC}) + (\%\ DOM_Bits \times I_{OS(SS)_DOM})] + [\%\ Receive \times I_{OS(SS)_REC}] \quad (2)$$

Where:

- $I_{OS(AVG)}$ is the average short circuit current
- % Transmit is the percentage the node is transmitting CAN messages
- % Receive is the percentage the node is receiving CAN messages
- % REC_Bits is the percentage of recessive bits in the transmitted CAN messages
- % DOM_Bits is the percentage of dominant bits in the transmitted CAN messages
- $I_{OS(SS)_REC}$ is the recessive steady state short circuit current
- $I_{OS(SS)_DOM}$ is the dominant steady state short circuit current

This short circuit current and the possible fault cases of the network should be taken into consideration when sizing the power supply used to generate the transceivers V_{CC} supply.

8.3.5 Thermal Shutdown (TSD)

If the junction temperature of the TCAN1046 exceeds the thermal shutdown threshold, T_{TSD}, the device turns off the CAN driver circuitry and blocks the TXD to bus transmission path. The shutdown condition is cleared when the junction temperature of the device drops below T_{TSD}. The CAN bus pins are biased to $V_{CC}/2$ during a TSD fault and the receiver to RXD path remains operational. The TCAN1046 TSD circuit includes hysteresis which prevents the CAN driver output from oscillating during a TSD fault.

8.3.6 Undervoltage Lockout

The supply pin, V_{CC}, has undervoltage detection that places the TCAN1046 into a protected state. This protects the bus during an undervoltage event on either supply pin.

表 8-1. Undervoltage Lockout

V_{CC}	DEVICE STATE	BUS	RXD PIN
> UV_{VCC}	Normal	Per TXD	Mirrors bus
< UV_{VCC}	Protected	High impedance Weak pull-down to ground(1)	High impedance

(1) V_{CC} = GND, see $I_{LKG(OFF)}$ in *Electrical Characteristics*

Once the undervoltage condition is cleared and t_{MODE} has expired the TCAN1046 transitions to normal mode and the host controller can send and receive CAN traffic again.

8.3.7 Unpowered Device

The TCAN1046 is designed to be an ideal passive or no load to the CAN bus if the device is unpowered. The bus pins were designed to have low leakage currents when the device is unpowered, so they do not load the bus. This is critical if some nodes of the network are unpowered while the rest of the of network remains operational.

The logic pins also have low leakage currents when the device is unpowered, so they do not load other circuits which may remain powered.

8.3.8 Floating pins

The TCAN1046 has internal pull-ups on critical pins which place the device into known states if the pin floats. This internal bias should not be relied upon by design though, especially in noisy environments, but instead should be considered a failsafe protection feature.

When a CAN controller supporting open-drain outputs is used an adequate external pull-up resistor must be chosen. This ensures that the TXD output of the CAN controller maintains acceptable bit time to the input of the CAN transceiver. See 表 8-2 for details on pin bias conditions.

表 8-2. Pin Bias

Pin	Pull-up or Pull-down	Comment
TXD1 and TXD2	Pull-up	Weakly biases TXD1 and TXD2 towards recessive to prevent bus blockage or TXD DTO triggering
STB1 and STB2	Pull-up	Weakly biases STB1 and STB2 towards low-power standby mode to prevent excessive system power

8.4 Device Functional Modes

8.4.1 Operating Modes

The TCAN1046 has two main operating modes; normal mode and standby mode. Operating mode selection is made by applying a high or low level to the STB1 and STB2 pins on the TCAN1046-Q1 device.

Copyright © 2022 Texas Instruments Incorporated

表 8-3. Operating Modes

STB	Device Mode	Driver	Receiver	RXD Pin
High	Low current standby mode with bus wake-up	Disabled	Low-power receiver and bus monitor enable	High (recessive) until valid WUP is received See section 8.3.3.1
Low	Normal Mode	Enabled	Enabled	Mirrors bus state

8.4.2 Normal Mode

This is the normal operating mode of the TCAN1046. The CAN driver and receiver are fully operational and CAN communication is bi-directional. The driver is translating a digital input on the TXD1 and TXD2 inputs to a differential output on the CANH1, CANL1 and CANH2, CANL2 bus pins. The receiver is translating the differential signal from CANH1, CANL1 and CANH2, CANL2 to a digital output on the RXD1 and RXD2 outputs.

8.4.3 Standby Mode

This is the low-power mode of the TCAN1046. The CAN driver and main receiver are switched off and bi-directional CAN communication is not possible. The low-power receiver and bus monitor circuits are enabled to allow for RXD wake-up requests via the CAN bus. A wake-up request is output to RXD1 or RXD2 depending on the channel which received the WUP as shown in 图 8-5. The local CAN protocol controller should monitor RXD for transitions (high-to-low) and reactivate the device to normal mode by pulling the STB1 and STB2 pin low. The CAN bus pins are weakly pulled to GND in this mode; see 图 8-2 and 图 8-3.

8.4.3.1 Remote Wake Request via Wake-Up Pattern (WUP) in Standby Mode

The TCAN1046 supports a remote wake-up request on both CAN channels that is used to indicate to the host controller that the bus is active and the node should return to normal operation.

The device uses the multiple filtered dominant wake-up pattern (WUP) from the ISO 11898-2:2016 standard to qualify bus activity. Once a valid WUP has been received, the wake request is indicated to the controller by a falling edge and low period corresponding to a filtered dominant on the RXD1 or RXD2 output of the TCAN1046.

The WUP consists of a filtered dominant pulse, followed by a filtered recessive pulse, and finally by a second filtered dominant pulse. The first filtered dominant initiates the WUP, and the bus monitor then waits on a filtered recessive; other bus traffic does not reset the bus monitor. Once a filtered recessive is received the bus monitor is waiting for a filtered dominant and again, other bus traffic does not reset the bus monitor. Immediately upon reception of the second filtered dominant the bus monitor recognizes the WUP and drives the RXD1 or RXD2 output low every time an additional filtered dominant signal is received from the bus.

For a dominant or recessive to be considered filtered, the bus must be in that state for more than the t_{WK_FILTER} time. Due to variability in t_{WK_FILTER} the following scenarios are applicable. Bus state times less than $t_{WK_FILTER(MIN)}$ are never detected as part of a WUP and thus no wake request is generated. Bus state times between $t_{WK_FILTER(MIN)}$ and $t_{WK_FILTER(MAX)}$ may be detected as part of a WUP and a wake-up request may be generated. Bus state times greater than $t_{WK_FILTER(MAX)}$ are always detected as part of a WUP, and thus a wake request is always generated. See 图 8-5 for the timing diagram of the wake-up pattern.

The pattern and t_{WK_FILTER} time used for the WUP prevents noise and bus stuck dominant faults from causing false wake-up requests while allowing any valid message to initiate a wake-up request.

The ISO 11898-2:2016 standard has defined times for a short and long wake-up filter time. The t_{WK_FILTER} timing for the device has been picked to be within the minimum and maximum values of both filter ranges. This timing has been chosen such that a single bit time at 500 kbps, or two back-to-back bit times at 1 Mbps triggers the filter in either bus state. Any CAN frame at 500 kbps or less would contain a valid WUP.

For an additional layer of robustness and to prevent false wake-ups, the device implements a wake-up timeout feature. For a remote wake-up event to successfully occur, the entire WUP must be received within the timeout value $t \leqslant t_{WK_TIMEOUT}$. If not, the internal logic is reset and the transceiver remains in its current state without waking up. The full pattern must then be transmitted again, conforming to the constraints mentioned in this section. See 图 8-5 for the timing diagram of the wake-up pattern with wake timeout feature.

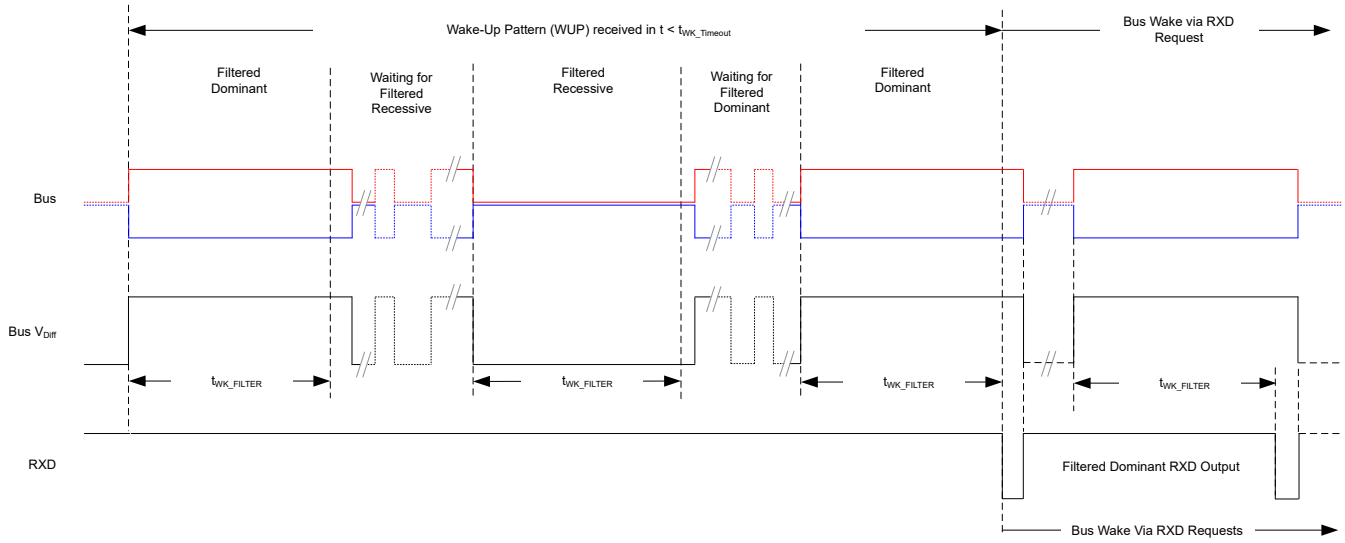

图 8-5. Wake-Up Pattern (WUP) with $t_{WK_TIMEOUT}$

Copyright © 2022 Texas Instruments Incorporated

8.4.4 Driver and Receiver Function

The digital logic input and output levels for the TCAN1046 are CMOS levels with respect to V_{CC} and are compatibility with protocol controllers having 5 V I/O levels.

表 8-4. Driver Function Table

Device Mode	TXD Input	Bus Outputs		Driven Bus State[2]
		CANH	CANL	
Normal	Low	High	Low	Dominant
	High or open	High impedance	High impedance	Biased recessive[3]
Standby	X[1]	High impedance	High impedance	Weak pull-down to ground[3]

(1) X = irrelevant
(2) For bus state and bias see 图 8-2 and 图 8-3
(3) See R_{IN} in *Electrical Characteristics*

表 8-5. Receiver Function Table Normal and Standby Mode

Device Mode	CAN Differential Inputs $V_{ID} = V_{CANH} - V_{CANL}$	Bus State	RXD Pin
Normal	$V_{ID} \geqslant 0.9$ V	Dominant	Low
	0.5 V < V_{ID} < 0.9 V	Undefined	Undefined
	$V_{ID} \leqslant 0.5$ V	Recessive	High
Standby	$V_{ID} \geqslant 1.15$ V	Dominant	High Low if a remote wake event occurred See 图 8-5
	0.4 V < V_{ID} < 1.15 V	Undefined	
	$V_{ID} \leqslant 0.4$ V	Recessive	
Any	Open ($V_{ID} \approx 0$ V)	Open	High

9 Application and Implementation

备注

以下应用部分中的信息不属于 TI 器件规格的范围，TI 不担保其准确性和完整性。TI 的客 户应负责确定器件是否适用于其应用。客户应验证并测试其设计，以确保系统功能。

9.1 Application Information

9.2 Typical Application

The TCAN1046 transceiver can be used in applications with a host controller or FPGA that includes the link layer portion of the CAN protocol. 图 9-1 shows a typical configuration for 5 V controller applications. The bus termination is shown for illustrative purposes.

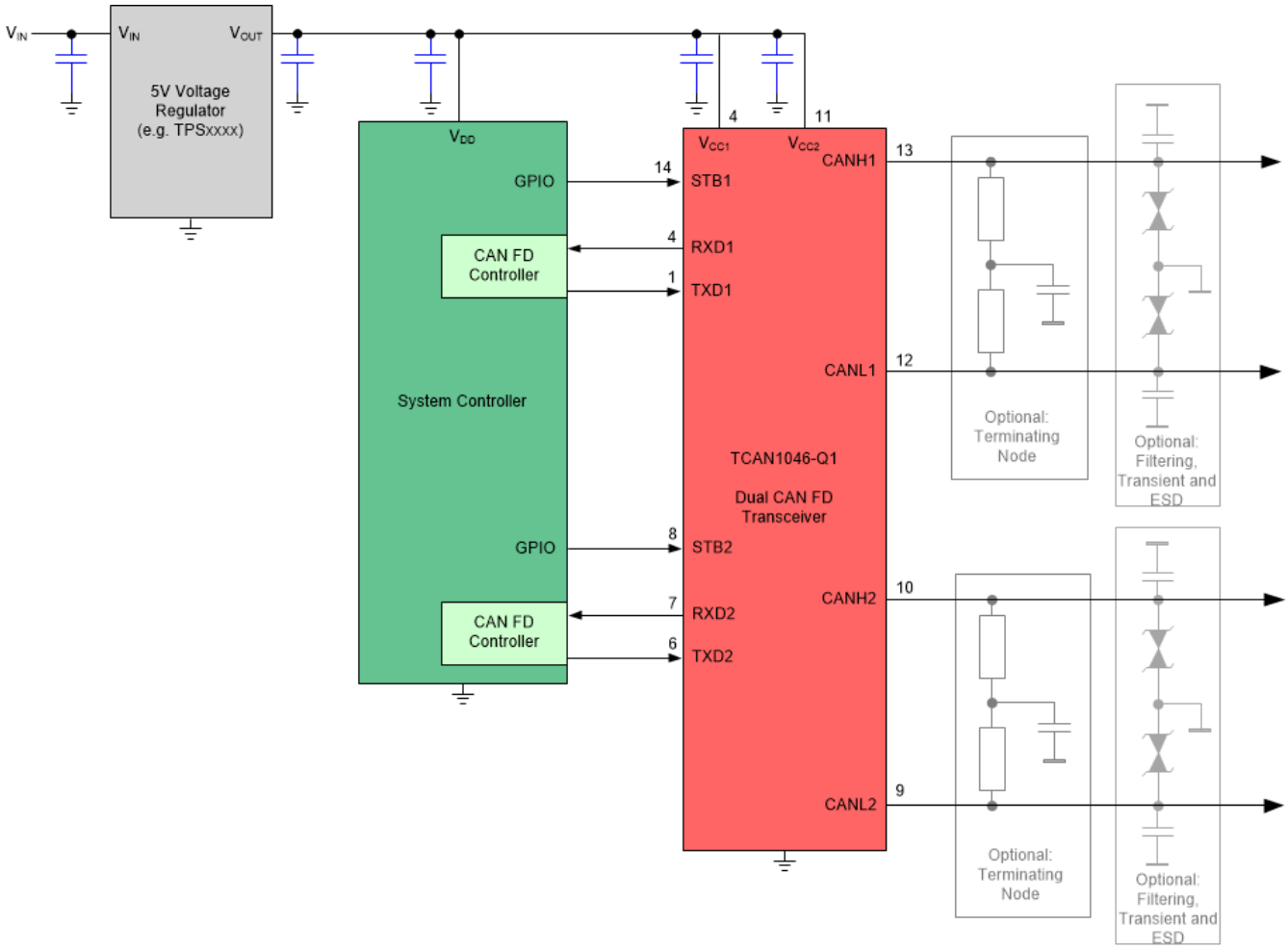

图 9-1. Transceiver Application Using 5 V I/O Connections

Copyright © 2022 Texas Instruments Incorporated

9.2.1 Design Requirements

9.2.1.1 CAN Termination

Termination may be a single 120-Ω resistor at each end of the bus, either on the cable or in a terminating node. If filtering and stabilization of the common-mode voltage of the bus is desired then split termination may be used, see 图 9-2. Split termination improves the electromagnetic emissions behavior of the network by filtering higher-frequency common-mode noise that may be present on the differential signal lines.

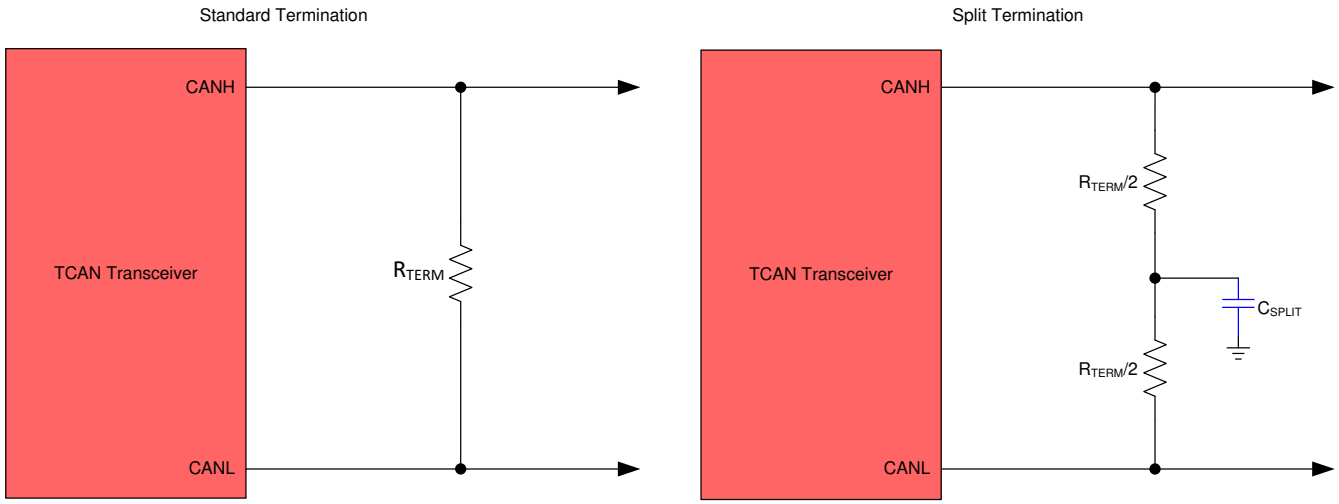

图 9-2. CAN Bus Termination Concepts

9.2.2 Detailed Design Procedures

9.2.2.1 Bus Loading, Length and Number of Nodes

A typical CAN application may have a maximum bus length of 40 meters and maximum stub length of 0.3 m. However, with careful design, users can have longer cables, longer stub lengths, and many more nodes to a bus. A high number of nodes requires a transceiver with high input impedance such as the TCAN1046.

Many CAN organizations and standards have scaled the use of CAN for applications outside the original ISO 11898-2 standard. They made system level trade off decisions for data rate, cable length, and parasitic loading of the bus. Examples of these CAN systems level specifications are ARINC 825, CANopen, DeviceNet, SAE J2284, SAE J1939, and NMEA 2000.

A CAN network system design is a series of tradeoffs. In the ISO 11898-2:2016 specification the driver differential output is specified with a bus load that can range from 50 Ω to 65 Ω where the differential output must be greater than 1.5 V. The TCAN1046 is specified to meet the 1.5 V requirement down to 50 Ω and is specified to meet 1.4 V differential output at 45 Ω bus load. The differential input resistance of the TCAN1046 is a minimum of 40 kΩ. If 100 TCAN1046 transceivers are in parallel on a bus, this is equivalent to a 400-Ω differential load in parallel with the nominal 60 Ω bus termination which gives a total bus load of approximately 52 Ω. Therefore, the TCAN1046 theoretically supports over 100 transceivers on a single bus segment. However, for a CAN network design margin must be given for signal loss across the system and cabling, parasitic loadings, timing, network imbalances, ground offsets and signal integrity thus a practical maximum number of nodes is often lower. Bus length may also be extended beyond 40 meters by careful system design and data rate tradeoffs. For example, CANopen network design guidelines allow the network to be up to 1 km with changes in the termination resistance, cabling, less than 64 nodes and significantly lowered data rate.

This flexibility in CAN network design is one of the key strengths of the various extensions and additional standards that have been built on the original ISO 11898-2 CAN standard. However, when using this flexibility, the CAN network system designer must take the responsibility of good network design to ensure robust network operation.

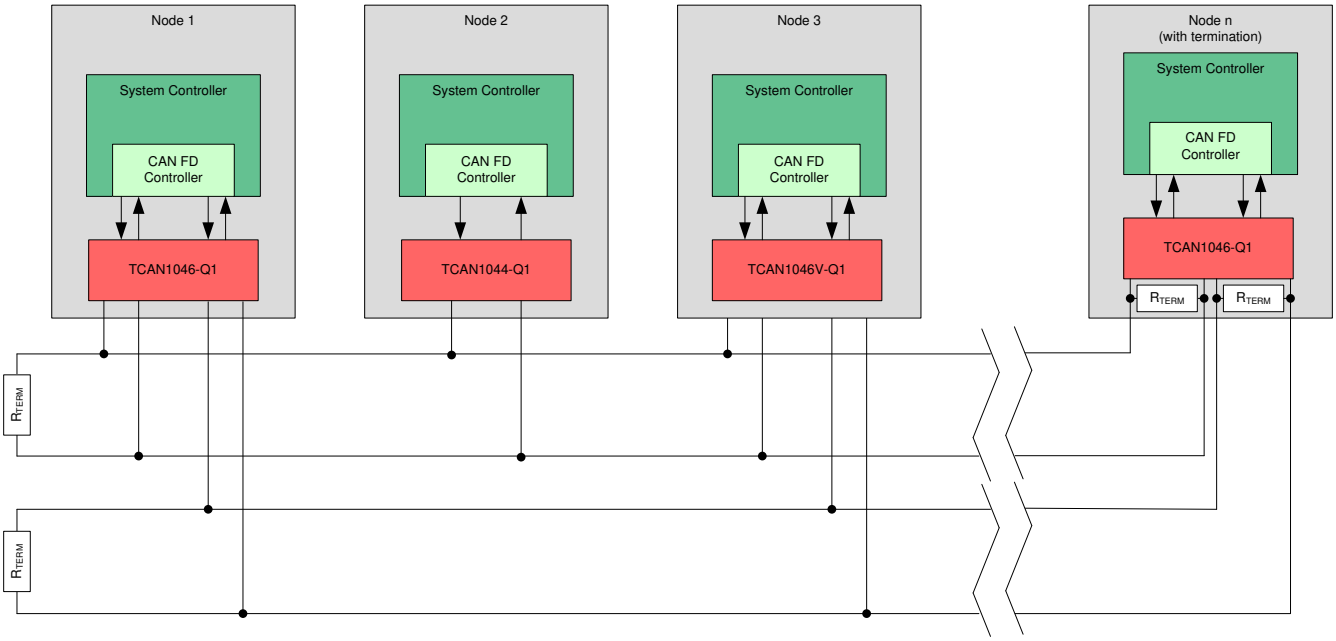

图 9-3. Typical CAN Bus

9.2.3 Application Curves

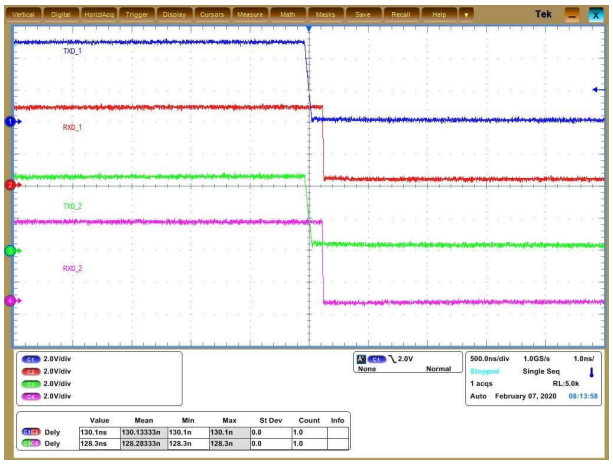

V_{CC} = 5 V R_L = 60 Ω

图 9-4. $t_{PROP(LOOP1)}$ Transceiver 1 & Transceiver 2

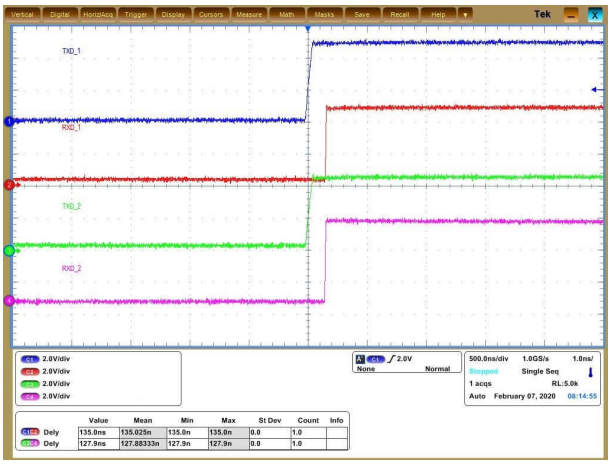

V_{CC} = 5 V R_L = 60 Ω

图 9-5. $t_{PROP(LOOP2)}$ Transceiver 1 & Transceiver 2

10 Power Supply Recommendations

The TCAN1046 dual transceiver is designed to operate with a main V_{CC1} and V_{CC2} input voltage supply range between 4.5 V and 5.5 V. The V_{CC} supply inputs must be well regulated. A decoupling capacitor, typically 100 nF, should be placed near the CAN transceiver's main V_{CC1} and V_{CC2} supply pins.

Copyright © 2022 Texas Instruments Incorporated

11 Layout

Robust and reliable CAN node design may require special layout techniques depending on the application and automotive design requirements. Since transient disturbances have high frequency content and a wide bandwidth, high-frequency layout techniques should be applied during PCB design.

11.1 Layout Guidelines

- Place the protection and filtering circuitry close to the bus connector, J1, to prevent transients, ESD, and noise from propagating onto the board. This layout example shows optional transient voltage suppression (TVS) diodes, D1 and D2, which may be implemented if the system-level requirements exceed the specified rating of the transceiver. This example also shows optional bus filter capacitors C4, C5, C6, and C8.
- Design the bus protection components in the direction of the signal path. Do not force the transient current to divert from the signal path to reach the protection device.
- Decoupling capacitors should be placed as close as possible to the supply pins V_{CC1} and V_{CC2} of the transceiver.
- Use at least two vias for supply and ground connections of bypass capacitors and protection devices to minimize trace and via inductance.

备注

High frequency current follows the path of least impedance and not the path of least resistance.

- This layout example shows how split termination could be implemented on the CAN node. The termination is split into two pairs of resistors, R7, R8, R9, and R10, with the center or split tap of the termination connected to ground via capacitors C3 and C7. Split termination provides common mode filtering for the bus. See 节 9.2.1.1, 节 8.3.4, and 方程式 2 for information on termination concepts and power ratings needed for the termination resistor(s).

11.2 Layout Example

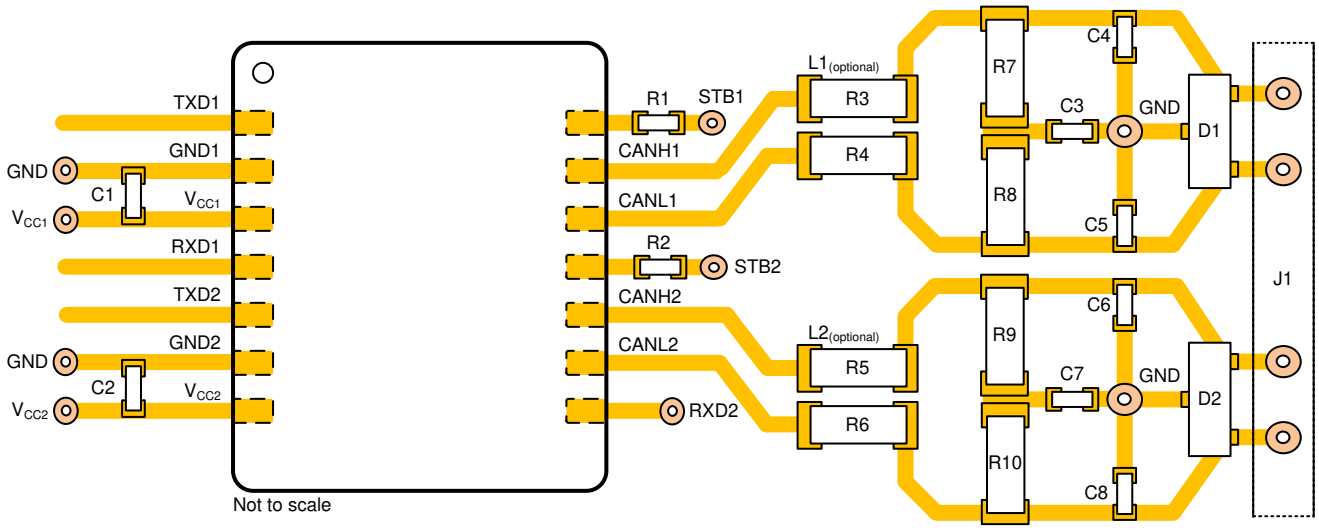

图 11-1. Layout Example

12 Device and Documentation Support

12.1 接收文档更新通知

要接收文档更新通知，请导航至 ti.com 上的器件产品文件夹。点击*订阅更新* 进行注册，即可每周接收产品信息更改摘要。有关更改的详细信息，请查看任何已修订文档中包含的修订历史记录。

12.2 支持资源

TI E2E™ 支持论坛是工程师的重要参考资料，可直接从专家获得快速、经过验证的解答和设计帮助。搜索现有解答或提出自己的问题可获得所需的快速设计帮助。

链接的内容由各个贡献者“按原样”提供。这些内容并不构成 TI 技术规范，并且不一定反映 TI 的观点；请参阅 TI 的《使用条款》。

12.3 Trademarks

TI E2E™ is a trademark of Texas Instruments.
所有商标均为其各自所有者的财产。

12.4 Electrostatic Discharge Caution

This integrated circuit can be damaged by ESD. Texas Instruments recommends that all integrated circuits be handled with appropriate precautions. Failure to observe proper handling and installation procedures can cause damage.

ESD damage can range from subtle performance degradation to complete device failure. Precision integrated circuits may be more susceptible to damage because very small parametric changes could cause the device not to meet its published specifications.

12.5 术语表

TI 术语表　　本术语表列出并解释了术语、首字母缩略词和定义。

13 Mechanical, Packaging, and Orderable Information

The following pages include mechanical, packaging, and orderable information. This information is the most current data available for the designated devices. This data is subject to change without notice and revision of this document. For browser-based versions of this data sheet, refer to the left-hand navigation.

Copyright © 2022 Texas Instruments Incorporated

PACKAGING INFORMATION

Orderable part number	Status (1)	Material type (2)	Package | Pins	Package qty | Carrier	RoHS (3)	Lead finish/ Ball material (4)	MSL rating/ Peak reflow (5)	Op temp (°C)	Part marking (6)
TCAN1046DMTRQ1	Active	Production	VSON (DMT) | 14	3000 | LARGE T&R	Yes	NIPDAU | SN	Level-2-260C-1 YEAR	-40 to 125	1046
TCAN1046DMTRQ1.A	Active	Production	VSON (DMT) | 14	3000 | LARGE T&R	Yes	NIPDAU	Level-2-260C-1 YEAR	-40 to 125	1046
TCAN1046DMTRQ1.B	Active	Production	VSON (DMT) | 14	3000 | LARGE T&R	Yes	NIPDAU	Level-2-260C-1 YEAR	-40 to 125	1046

(1) **Status:** For more details on status, see our product life cycle.

(2) **Material type:** When designated, preproduction parts are prototypes/experimental devices, and are not yet approved or released for full production. Testing and final process, including without limitation quality assurance, reliability performance testing, and/or process qualification, may not yet be complete, and this item is subject to further changes or possible discontinuation. If available for ordering, purchases will be subject to an additional waiver at checkout, and are intended for early internal evaluation purposes only. These items are sold without warranties of any kind.

(3) **RoHS values:** Yes, No, RoHS Exempt. See the TI RoHS Statement for additional information and value definition.

(4) **Lead finish/Ball material:** Parts may have multiple material finish options. Finish options are separated by a vertical ruled line. Lead finish/Ball material values may wrap to two lines if the finish value exceeds the maximum column width.

(5) **MSL rating/Peak reflow:** The moisture sensitivity level ratings and peak solder (reflow) temperatures. In the event that a part has multiple moisture sensitivity ratings, only the lowest level per JEDEC standards is shown. Refer to the shipping label for the actual reflow temperature that will be used to mount the part to the printed circuit board.

(6) **Part marking:** There may be an additional marking, which relates to the logo, the lot trace code information, or the environmental category of the part.

Multiple part markings will be inside parentheses. Only one part marking contained in parentheses and separated by a "~" will appear on a part. If a line is indented then it is a continuation of the previous line and the two combined represent the entire part marking for that device.

Important Information and Disclaimer: The information provided on this page represents TI's knowledge and belief as of the date that it is provided. TI bases its knowledge and belief on information provided by third parties, and makes no representation or warranty as to the accuracy of such information. Efforts are underway to better integrate information from third parties. TI has taken and continues to take reasonable steps to provide representative and accurate information but may not have conducted destructive testing or chemical analysis on incoming materials and chemicals. TI and TI suppliers consider certain information to be proprietary, and thus CAS numbers and other limited information may not be available for release.

In no event shall TI's liability arising out of such information exceed the total purchase price of the TI part(s) at issue in this document sold by TI to Customer on an annual basis.

GENERIC PACKAGE VIEW

DMT 14

VSON - 0.9 mm max height

3 x 4.5, 0.65 mm pitch

PLASTIC SMALL OUTLINE - NO LEAD

This image is a representation of the package family, actual package may vary.
Refer to the product data sheet for package details.

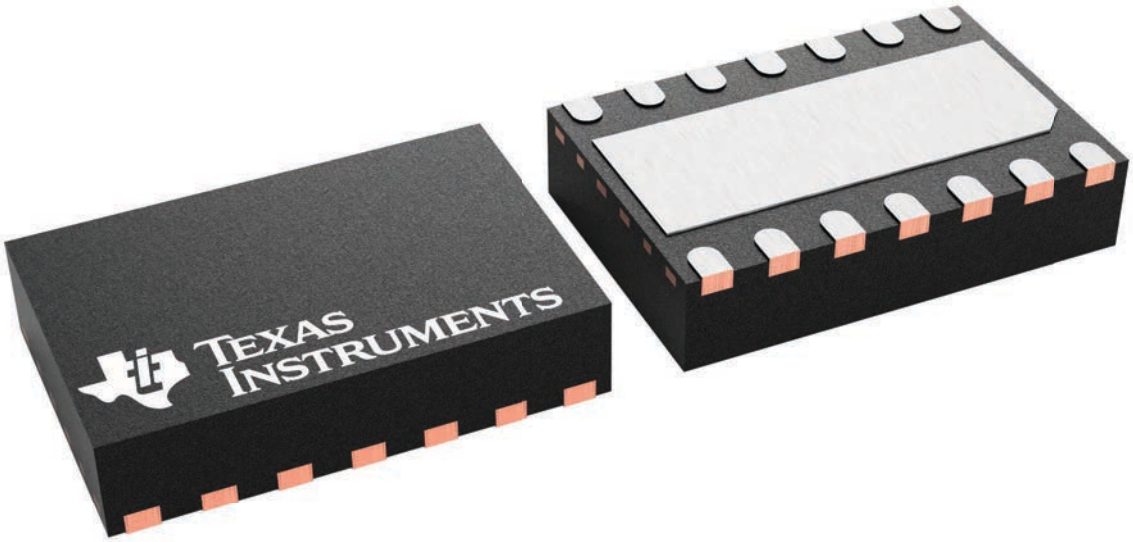

4225088/A

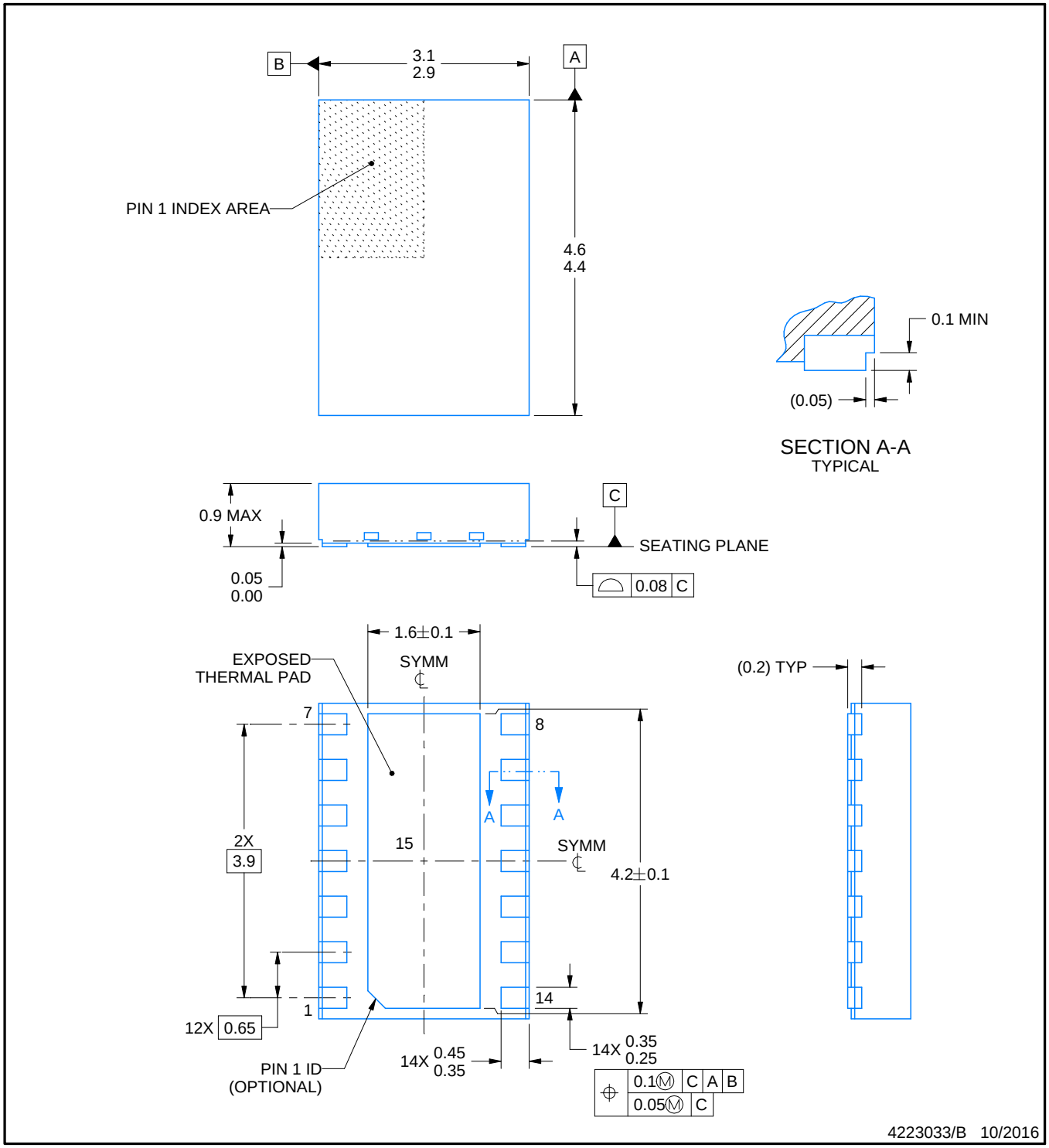

NOTES:

1. All linear dimensions are in millimeters. Any dimensions in parenthesis are for reference only. Dimensioning and tolerancing per ASME Y14.5M.
2. This drawing is subject to change without notice.
3. The package thermal pad must be soldered to the printed circuit board for thermal and mechanical performance.

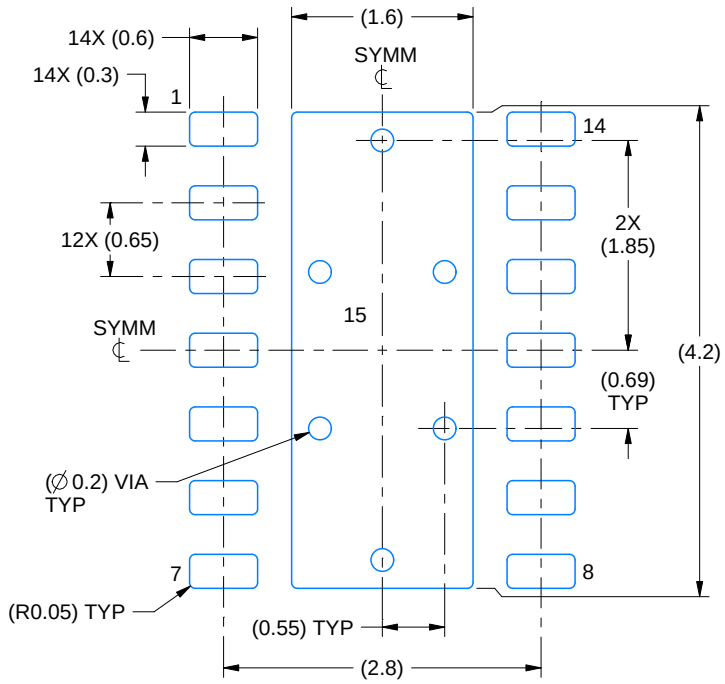

LAND PATTERN EXAMPLE
SCALE:15X

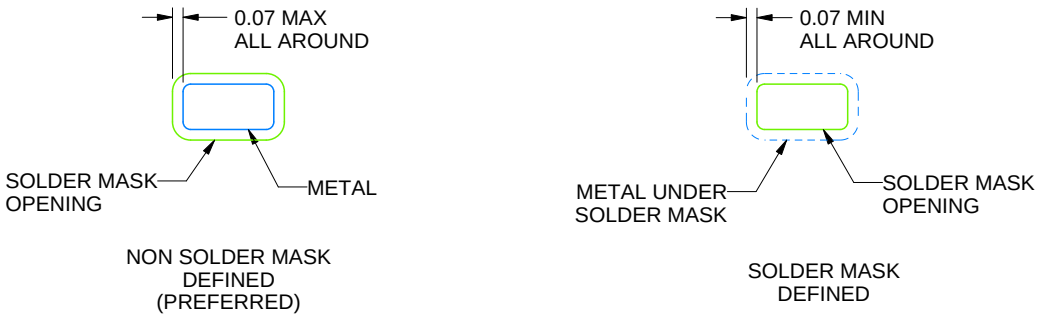

SOLDER MASK DETAILS

4223033/B 10/2016

NOTES: (continued)

4. This package is designed to be soldered to a thermal pad on the board. For more information, see Texas Instruments literature number SLUA271 (www.ti.com/lit/slua271).
5. Vias are optional depending on application, refer to device data sheet. If any vias are implemented, refer to their locations shown on this view. It is recommended that vias under paste be filled, plugged or tented.

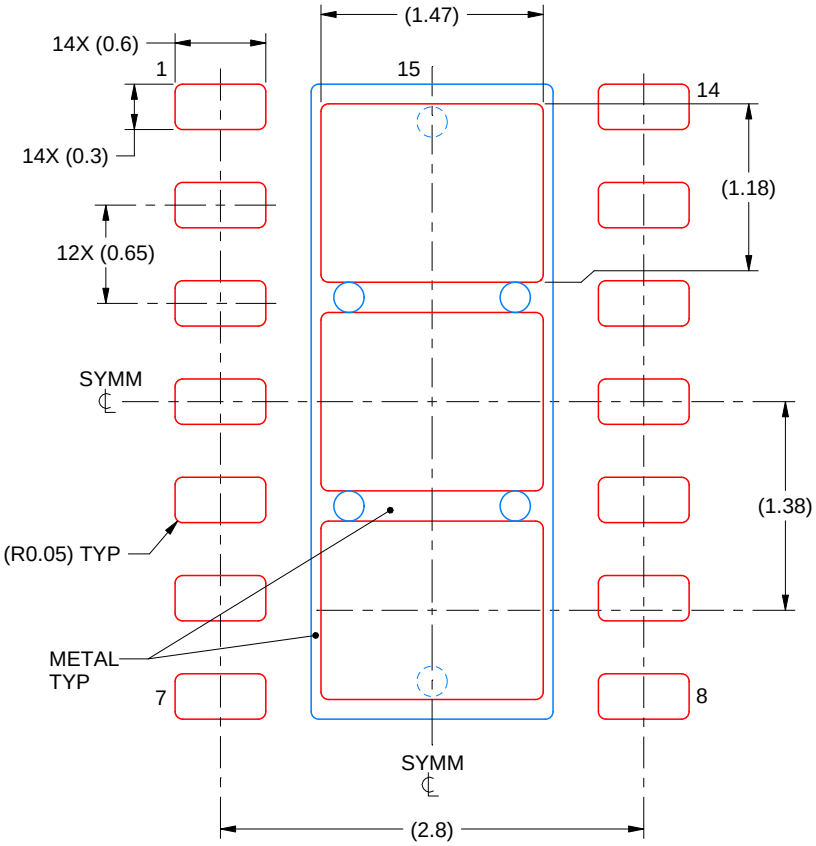

SOLDER PASTE EXAMPLE
BASED ON 0.125 mm THICK STENCIL

EXPOSED PAD 15
77.4% PRINTED SOLDER COVERAGE BY AREA
SCALE:20X

4223033/B 10/2016

NOTES: (continued)

6. Laser cutting apertures with trapezoidal walls and rounded corners may offer better paste release. IPC-7525 may have alternate design recommendations.

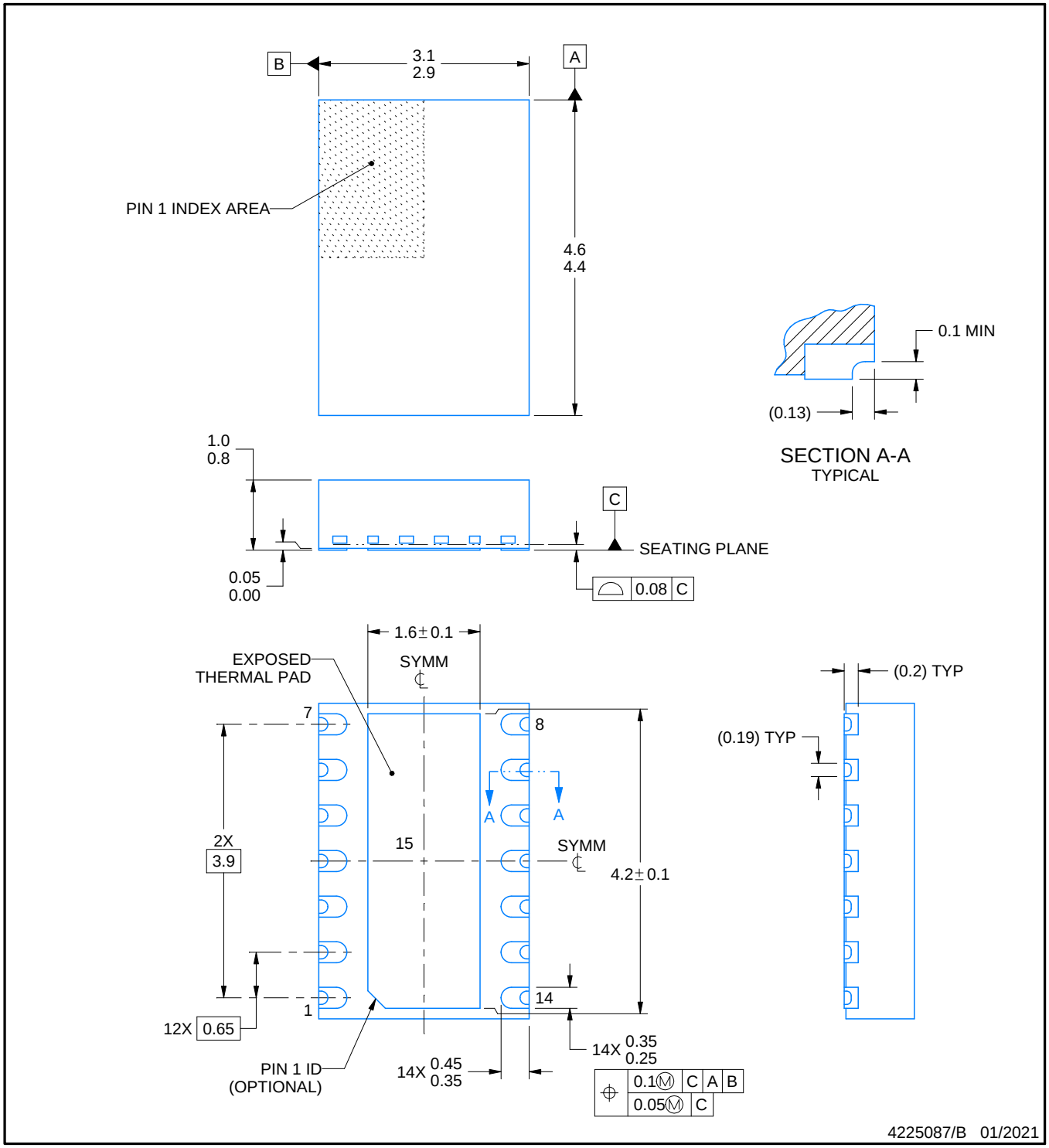

NOTES:

1. All linear dimensions are in millimeters. Any dimensions in parenthesis are for reference only. Dimensioning and tolerancing per ASME Y14.5M.
2. This drawing is subject to change without notice.
3. The package thermal pad must be soldered to the printed circuit board for thermal and mechanical performance.

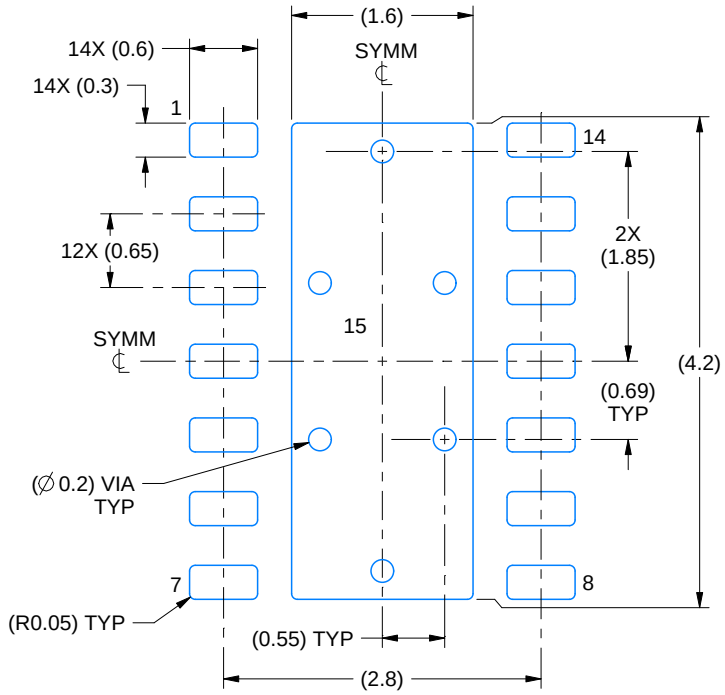

LAND PATTERN EXAMPLE
EXPOSED METAL SHOWN
SCALE:15X

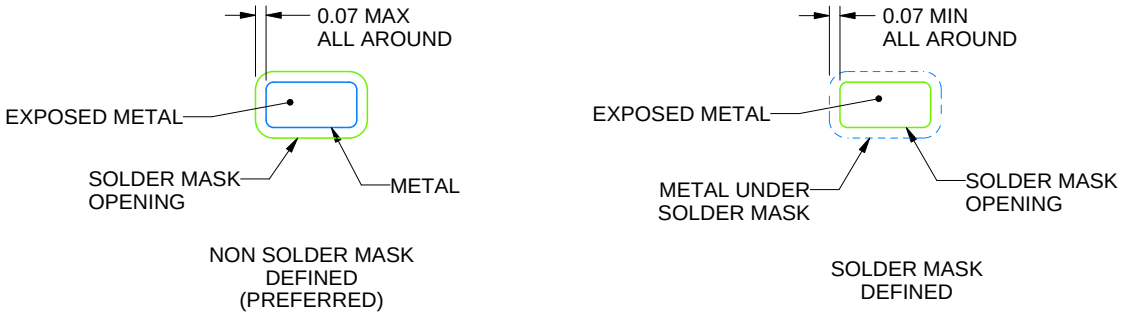

SOLDER MASK DETAILS

4225087/B 01/2021

NOTES: (continued)

4. This package is designed to be soldered to a thermal pad on the board. For more information, see Texas Instruments literature number SLUA271 (www.ti.com/lit/slua271).
5. Vias are optional depending on application, refer to device data sheet. If any vias are implemented, refer to their locations shown on this view. It is recommended that vias under paste be filled, plugged or tented.

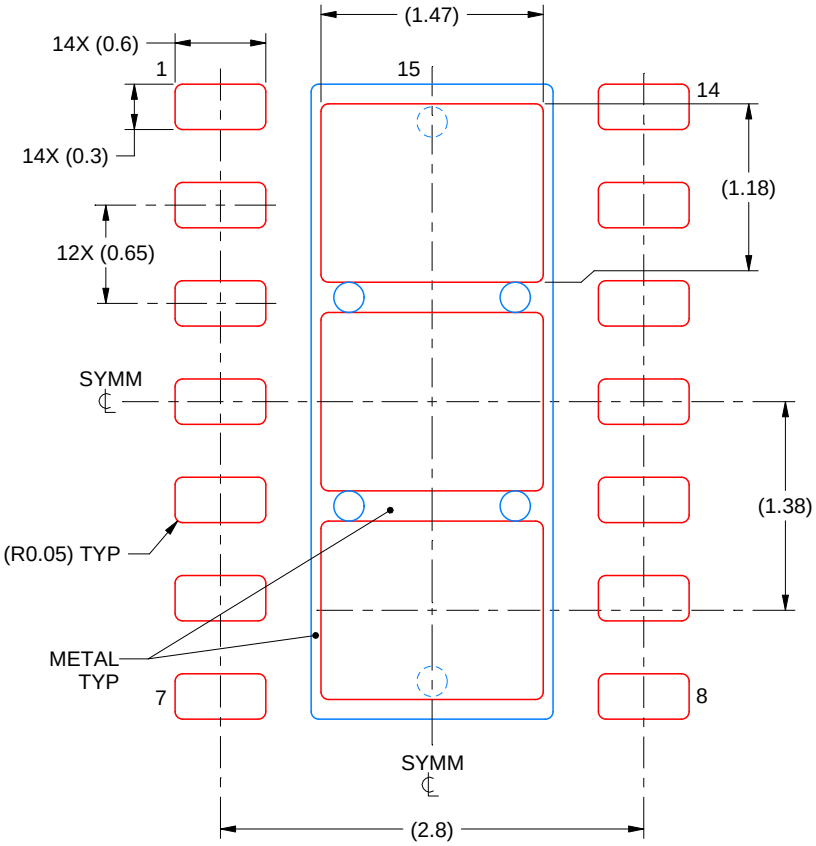

SOLDER PASTE EXAMPLE
BASED ON 0.125 mm THICK STENCIL

EXPOSED PAD 15
77.4% PRINTED SOLDER COVERAGE BY AREA
SCALE:20X

4225087/B 01/2021

NOTES: (continued)

6. Laser cutting apertures with trapezoidal walls and rounded corners may offer better paste release. IPC-7525 may have alternate design recommendations.

重要通知和免责声明

TI“按原样”提供技术和可靠性数据（包括数据表）、设计资源（包括参考设计）、应用或其他设计建议、网络工具、安全信息和其他资源，不保证没有瑕疵且不做出任何明示或暗示的担保，包括但不限于对适销性、某特定用途方面的适用性或不侵犯任何第三方知识产权的暗示担保。

这些资源可供使用 TI 产品进行设计的熟练开发人员使用。您将自行承担以下全部责任：(1) 针对您的应用选择合适的 TI 产品，(2) 设计、验证并测试您的应用，(3) 确保您的应用满足相应标准以及任何其他功能安全、信息安全、监管或其他要求。

这些资源如有变更，恕不另行通知。TI 授权您仅可将这些资源用于研发本资源所述的 TI 产品的相关应用。 严禁以其他方式对这些资源进行复制或展示。您无权使用任何其他 TI 知识产权或任何第三方知识产权。您应全额赔偿因在这些资源的使用中对 TI 及其代表造成的任何索赔、损害、成本、损失和债务，TI 对此概不负责。

TI 提供的产品受 TI 的销售条款或 ti.com 上其他适用条款/TI 产品随附的其他适用条款的约束。TI 提供这些资源并不会扩展或以其他方式更改 TI 针对 TI 产品发布的适用的担保或担保免责声明。

TI 反对并拒绝您可能提出的任何其他或不同的条款。

邮寄地址：Texas Instruments, Post Office Box 655303, Dallas, Texas 75265
版权所有 © 2025，德州仪器 (TI) 公司