SN65HVD01 3.3V RS-485，具有灵活 I/O 电源和可选速度

1 特性

- 超过 TIA-485 标准的要求
- 针对数据和使能信号的 1.65V 至 3.6V 电源
- 针对总线信号的 3V 至 3.6V 电源
- SLR 引脚可选数据速率：250ksps 或 20Mbps
- 1/8 单位负载在一条总线上支持多达 256 个节点
- 小型 3mm x 3mm 小外形尺寸无引线 (SON) 封装
- 故障安全接收器（总线开路、总线短接、总线闲置）
- 运行温度范围：-40°C 至 125°C
- 总线引脚保护大于：
  - ±15kV 人体模型 (HBM) 保护
  - ±16kV IEC61000-4-2 接触放电
  - ±16kV IEC61000-4-2 空气放电
  - 4kV IEC61000-4-4 快速瞬态突发

2 应用范围

- 电信基础设施
- 高速数据链路
- 低压 µC 通信

3 说明

SN65HVD01 是一款低功耗，250ksps 或 20Mbps 数据速率可选 RS-485 收发器，此收发器采用 1.65V 至 3.6V 电源用于数据和使能信号，而针对总线信号采用一个 3.3V ± 10% 电源。 此器件被设计用于要求同步（并行收发器）信号时序的应用。 片上瞬态抑制保护此器件不受 IEC 61000 静电放电 (ESD) 和电快速瞬变 (EFT) 瞬态的影响而损坏。

此器件组合有一个差分驱动器和一个差分接收器，这些器件被内部连接以形成一个适用于半双工（两线制总线）通信的总线端口。 此器件特有一个宽共模电压范围，这使得此器件适合于长线缆运行上的多点应用。 SN65HVD01 采用极小型，3mm x 3mm，SON 封装，运行温度范围 -40°C 至 125°C。

器件信息

订货编号	封装	封装尺寸
SN65HVD01DRC	SON (10)	3mm x 3mm

典型应用

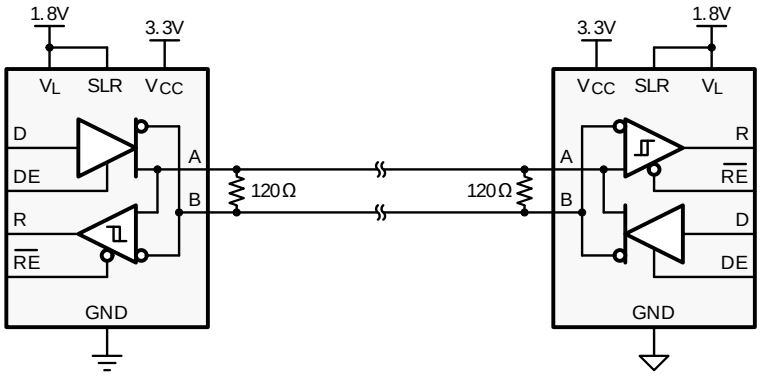

PRODUCTION DATA information is current as of publication date. Products conform to specifications per the terms of the Texas Instruments standard warranty. Production processing does not necessarily include testing of all parameters.

目录

1 特性 ... 1
2 应用范围 ... 1
3 说明 ... 1
4 修订历史记录 ... 2
5 Pin Configuration and Functions ... 4
6 Specifications ... 4
6.1 Absolute Maximum Ratings ... 4
6.2 Handling Ratings ... 5
6.3 Recommended Operating Conditions ... 5
6.4 Thermal Information ... 5
6.5 Dissipation Ratings ... 6
6.6 Electrical Characteristics ... 7
6.7 Switching Characteristics ... 8
6.8 Typical Characteristics ... 9
7 Parameter Measurement Information ... 11
8 Detailed Description ... 15
8.1 Overview ... 15
8.2 Functional Block Diagram ... 15
8.3 Feature Description ... 15
8.4 Device Functional Modes ... 15
9 Applications and Implementation ... 18
9.1 Application Information ... 18
9.2 Typical Application ... 18
10 Power Supply Recommendations ... 21
11 Layout ... 21
11.1 Layout Guidelines ... 21
11.2 Layout Example ... 21
12 器件和文档支持 ... 22
12.1 商标 ... 22
12.2 静电放电警告 ... 22
12.3 术语表 ... 22
13 机械封装和可订购信息 ... 22

4 修订历史记录

NOTE: Page numbers for previous revisions may differ from page numbers in the current version.

Changes from Revision E (March 2014) to Revision F — **Page**

- Changed Figure 22 image and CH3 scale from: 100 V/div To 2 V/div ... 20
- Changed Figure 23 CH3 scale from: 100 V/div To 2 V/div ... 20

Changes from Revision D (November 2013) to Revision E — **Page**

- 已将数据表更改为全新的 TI 标准格式 ... 1
- 已添加器件信息表 ... 1
- Added the Handling Ratings table ... 5
- Added the Detailed Description section ... 15
- Changed Figure 17 ... 17
- Added the Applications and Implementation section ... 18
- Deleted the Application Information section ... 18
- Added the Power Supply Recommendations ... 21
- Added the Layout section ... 21

版权 © 2013–2014, Texas Instruments Incorporated

Changes from Revision C (November 2013) to Revision D **Page**

- 已将特性从：小型 3mm x 3mm 超薄四方扁平无引线 (VQFN) 封装更改为：小型 3mm x 3mm 小外形尺寸无引线 (SON) 封装 1
- 已将特性从：总线引脚保护：更改为：总线引脚保护大于 1
- 已将特性从：≤ 15kV 更改为：±15kV HBM 保护 1
- 已将特性从：≤ 15kV 更改为：±16kV 接触放电 1
- 已将特性从：≤ 15kV 更改为：±16kV 空气放电 1
- 已将说明文本从：3mm x 3mm，VQFN 封装更改为：3mm x 3mm，SON 封装 1
- Changed the ABSOLUTE MAXIMUM RATINGS for IEC 61000-4-2 ESD (Air-Gap Discharge) From MAX = ±15 To: MAX = ±16 5
- Changed the ABSOLUTE MAXIMUM RATINGS for IEC 61000-4-2 ESD (Contact Discharge) From MAX = ±15 To: MAX = ±16 5
- Changed the Thermal Information table package From VQFN (DRC) To; SON (DRC) 5

Changes from Revision B (October 2013) to Revision C **Page**

- 已更改 从产品预览改为生产数据 1

Changes from Revision A (October 2013) to Revision B **Page**

- Added 8 Typical Characteristics curves 9

Changes from Original (July 2013) to Revision A **Page**

- 已将特性从：针对数据和使能信号的 1.8V 至 3.3V 电源更改为：针对数据和使能信号的 1.65V 至 3.6V 电源 1
- 已将特性从：针对总线信号的 3.3V 电源更改为：针对总线信号的 3V 至 3.6V 电源 1
- 已将特性从：可选数据速率：250ksps 或 20Mbps 更改为：SLR 引脚可选数据速率：250ksps 或 20Mbps 1
- 已更改应用范围列表 1
- 已更改说明 1
- 在典型应用电路中，已将：100Ω 电阻器更改为：120Ω 电阻器 1
- Changed the ELECTRICAL CHARACTERISTICS table values 7
- Changed the SWITCHING CHARACTERISTICS table values 8
- Changed V_{CC} and 3 V to V_L in Figure 9 through Figure 16 11
- Changed Figure 17 17

Copyright © 2013–2014, Texas Instruments Incorporated

5 Pin Configuration and Functions

DRC 10 PIN
(TOP VIEW)

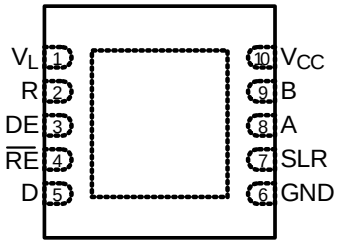

Pin Functions

NAME	NO.	I/O	DESCRIPTION
V_L	1	Logic Supply	1.65 V to 3.6 V supply for logic I/O signals R, $\overline{RE}$, D, DE, and SLR)
R	2	Digital Output	Receive data output
DE	3	Digital Input	Driver enable input
$\overline{RE}$	4	Digital Input	Receiver enable input
D	5	Digital Input	Transmission data input
GND	6	Reference Potential	Local device ground
SLR	7	Digital Input	Slew rate select: Low = 20 Mbps, High = 250 kbps. Defaults to 20 Mbps if SLR is left floating
A	8	Bus I/O	Digital bus I/O, A
B	9	Bus I/O	Digital bus I/O, B
V_{CC}	10	Bus Supply	3 V to 3.6 V supply for A and B bus lines

6 Specifications

6.1 Absolute Maximum Ratings(1)

	VALUE		UNIT
	MIN	MAX	
Control supply voltage, V_L	–0.5	4	V
Bus supply voltage, V_{CC}	–0.5	5.5	V
Voltage range at A or B Inputs	–13	16.5	V
Input voltage range at any logic terminal	–0.3	5.7	V
Voltage input range, transient pulse, A and B, through 100Ω	–100	100	V
Receiver output current	–12	12	mA
Junction temperature, T_J		170	°C
Continuous total power dissipation	See the Thermal Information table		

(1) Stresses beyond those listed under "absolute maximum ratings" may cause permanent damage to the device. These are stress ratings only and functional operation of the device at these or any other conditions beyond those indicated under "recommended operating conditions" is not implied. Exposure to absolute-maximum-rated conditions for extended periods may affect device reliability.

Copyright © 2013–2014, Texas Instruments Incorporated

6.2 Handling Ratings

		MIN	MAX	UNIT
T_{STG}	Storage temperature range	–65	150	°C
V_{ESD}	IEC 60749-26 ESD (Human Body Model), bus terminals and GND		±15	kV
	IEC 61000-4-2 ESD (Air-Gap Discharge), bus terminals and GND (1)		±16	kV
	IEC 61000-4-2 ESD (Contact Discharge), bus terminals and GND		±16	kV
	IEC 61000-4-4 EFT (Fast transient or burst) bus terminals and GND		±4	kV
	JEDEC Standard 22, Test Method A114 (Human Body Model), all terminals		±8	kV
	JEDEC Standard 22, Test Method C101 (Charged Device Model), all terminals		±1.5	kV

(1) As stated in the IEC 61000-4-2 standard, contact discharge is the preferred transient protection test method. Although IEC air-gap testing is less repeatable than contact testing, air discharge protection levels are inferred from the contact discharge test results.

6.3 Recommended Operating Conditions

			MIN	NOM	MAX	UNIT
V_L	Control supply voltage		1.65		3.6	V
V_{CC}	Bus supply voltage		3	3.3	3.6	V
V_I	Input voltage at any bus terminal (separately or common mode) (1)		–7		12	V
V_{IH}	High-level input voltage (Driver, driver enable, receiver enable inputs, and slew rate select)		$0.7 \times V_L$		V_L	V
V_{IL}	Low-level input voltage (Driver, driver enable, receiver enable inputs, and slew rate select)		0		$0.3 \times V_L$	V
V_{ID}	Differential input voltage		–12		12	V
I_O	Output current	Driver	–80		80	mA
		Receiver	–2		2	mA
R_L	Differential load resistance		54	60		Ω
C_L	Differential load capacitance			50		pF
$1/t_{UI}$	Signaling rate	SLR = '0'			20	Mbps
		SLR = '1'			250	kbps
T_A (2)	Operating free-air temperature Thermal Information		–40		125	°C

(1) The algebraic convention, in which the least positive (most negative) limit is designated as minimum is used in this data sheet.
(2) Operation is specified for internal (junction) temperatures up to 150°C. Self-heating due to internal power dissipation should be considered for each application. Maximum junction temperature is internally limited by the thermal shut-down (TSD) circuit which disables the driver outputs when the junction temperature reaches 170°C.

6.4 Thermal Information

PARAMETER(1)		SON (DRC)	UNIT
Θ_{JA}	Junction-to-Ambient Thermal Resistance	41.4	°C/ W
$\Theta_{JC(top)}$	Junction-to-Case(top) Thermal Resistance	48.7	
Θ_{JB}	Junction-to-Board Thermal Resistance	18.8	
Ψ_{JT}	Junction-to-Top characterization parameter	0.6	
Ψ_{JB}	Junction-to-Board characterization parameter	19	
$\Theta_{JC(bottom)}$	Junction-to-Case(bottom) Thermal Resistance	3.7	
T_{TSD}	Thermal Shut-down junction temperature	170	°C

(1) For more information about traditional and new thermal metrics, see the *IC Package Thermal Metrics* application report, SPRA953

Copyright © 2013–2014, Texas Instruments Incorporated

6.5 Dissipation Ratings

PARAMETER			TEST CONDITIONS		VALUE	UNIT
PD	Power Dissipation driver and receiver enabled, $V_{CC} = V_L = 3.6$ V, $T_J = 150°C$, 50% duty cycle square-wave signal at signaling rate	Unterminated	$R_L = 300\ \Omega$, $C_L = 50$ pF (driver)	250 kbps	125	mW
				20 Mbps	175	
		RS-422 load	$R_L = 100\ \Omega$, $C_L = 50$ pF (driver)	250 kbps	165	mW
				20 Mbps	215	
		RS-485 load	$R_L = 54\ \Omega$, $C_L = 50$ pF (driver)	250 kbps	200	mW
				20 Mbps	250	

Copyright © 2013–2014, Texas Instruments Incorporated

6.6 Electrical Characteristics

over recommended operating range (unless otherwise specified)

PARAMETER		TEST CONDITIONS			MIN	TYP	MAX	UNIT
$\lvert V_{OD} \rvert$	Driver differential output voltage magnitude	R_L = 60 Ω, 375 Ω on each output to –7 V to 12 V		See Figure 9	1.5	2		V
		R_L = 54 Ω (RS-485)		See Figure 10	1.5	2		V
		R_L = 100 Ω (RS-422) T_J ≥ 0°C, V_{CC} ≥ 3.2V			2			V
$\Delta\lvert V_{OD} \rvert$	Change in magnitude of driver differential output voltage	R_L = 54 Ω, C_L = 50 pF			–50	0	50	mV
$V_{OC(SS)}$	Steady-state common-mode output voltage	Center of two 27-Ω load resistors			1	V_{CC}/2	3	V
ΔV_{OC}	Change in differential driver output common-mode voltage				–50	0	50	mV
$V_{OC(PP)}$	Peak-to-peak driver common-mode output voltage					500		mV
C_{OD}	Differential output capacitance					15		pF
V_{IT+}	Positive-going receiver differential input voltage threshold				See (1)	–60	–20	mV
V_{IT-}	Negative-going receiver differential input voltage threshold				–200	–130	See (1)	mV
V_{HYS}	Receiver differential input voltage threshold hysteresis ($V_{IT+} – V_{IT-}$)				40	70		mV
V_{OH}	Receiver high-level output voltage	V_L = 1.65 V, I_{OH} = -2 mA			1.3	1.45		V
		V_L = 3 V, I_{OH} = -2 mA			2.8	2.9		
V_{OL}	Receiver low-level output voltage	V_L = 1.65 V, I_{OL} = 2 mA				0.2	0.35	V
		V_L = 3 V, I_{OL} = 2 mA				0.1	0.2	
I_I	Driver input, driver enable, and receiver enable input current				–2		2	µA
I_{OZ}	Receiver output high-impedance current	V_O = 0 V or V_L, $\overline{RE}$ at V_L			–1		1	µA
I_{OS}	Driver short-circuit output current				–150		150	mA
I_I	Bus input current (disabled driver)	V_L = 1.8 V, V_{CC} = 3.3 V, DE at 0 V	V_I = 12 V			85	125	µA
			V_I = –7 V		–100	–60		µA
I_{CC}	Supply current (quiescent)	Driver and Receiver enabled	DE=V_L, RE = GND, No load			750	1100	µA
				T_J ≤ 85°C			1000	µA
		Driver enabled, receiver disabled	DE=V_{CC}, $\overline{RE}$ = V_L, No load			350	650	µA
		Driver disabled, receiver enabled	DE=GND, $\overline{RE}$ = GND, No load			650	800	µA
		Driver and receiver disabled	DE=GND, $\overline{RE}$ = V_L, No load			0.1	5	µA
	Supply current (dynamic)	See the Typical Characteristics section						

(1) Under any specific conditions, V_{IT+} is specified to be at least V_{HYS} higher than V_{IT-}.

Copyright © 2013–2014, Texas Instruments Incorporated

6.7 Switching Characteristics

over recommended operating conditions

PARAMETER		TEST CONDITIONS		MIN	TYP	MAX	UNIT
DRIVER, SLR = '1', 250 kbps, bit time ≥ 4 µs							
t_r, t_f	Driver differential output rise/fall time	R_L = 54 Ω, C_L = 50 pF	See Figure 11	0.4	0.8	1.2	µs
t_{PHL}, t_{PLH}	Driver propagation delay			0.4	0.8	1.2	µs
$t_{SK(P)}$	Driver pulse skew, $\|t_{PHL} – t_{PLH}\|$					0.2	µs
t_{PHZ}, t_{PLZ}	Driver disable time		See Figure 12 and Figure 13		0.025	0.1	µs
t_{PZH}, t_{PZL}	Driver enable time	Receiver enabled			0.6	1	µs
		Receiver disabled			3.5	8	µs
DRIVER, SLR = '0', 20 Mbps, bit time ≥ 50 ns							
t_r, t_f	Driver differential output rise/fall time	R_L = 54 Ω, C_L = 50 pF	See Figure 11	5	10	15	ns
t_{PHL}, t_{PLH}	Driver propagation delay			6	15	25	ns
$t_{SK(P)}$	Driver pulse skew, $\|t_{PHL} – t_{PLH}\|$					4	ns
t_{PHZ}, t_{PLZ}	Driver disable time		See Figure 12 and Figure 13		20	35	ns
t_{PZH}, t_{PZL}	Driver enable time	Receiver enabled			14	30	ns
		Receiver disabled			3	7	µs
RECEIVER, SLR = 'X'							
t_r, t_f	Receiver output rise/fall time	C_L = 15 pF	See Figure 14		5	15	ns
t_{PHL}, t_{PLH}	Receiver propagation delay time			30	60	90	ns
$t_{SK(P)}$	Receiver pulse skew, $\|t_{PHL} – t_{PLH}\|$					15	ns
t_{PLZ}, t_{PHZ}	Receiver disable time				10	20	ns
$t_{pZL(1)}$, $t_{PZH(1)}$ $t_{PZL(2)}$, $t_{PZH(2)}$	Receiver enable time	Driver enabled	See Figure 15		15	80	ns
		Driver disabled	See Figure 16		3	8	µs

Copyright © 2013–2014, Texas Instruments Incorporated

6.8 Typical Characteristics

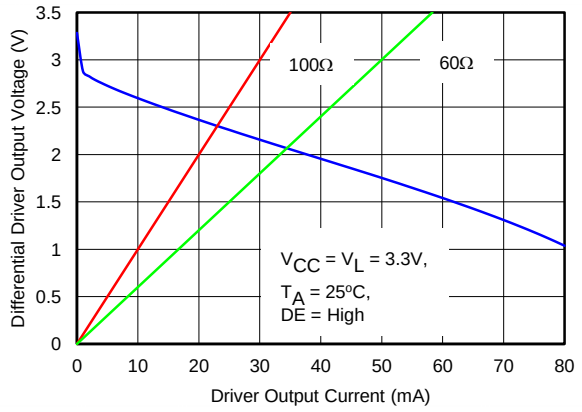

Figure 1. Differential Driver Output Voltage vs Driver Output Current

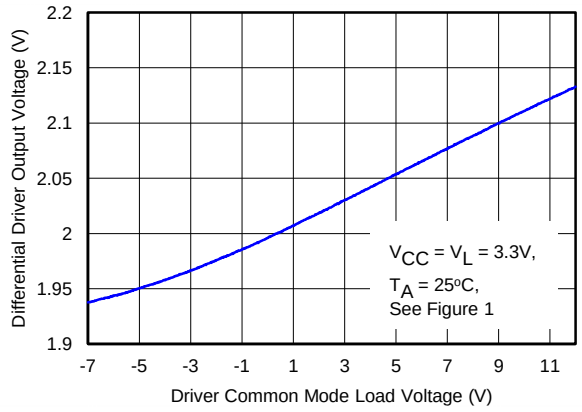

Figure 2. Differential Driver Output Voltage vs Driver Common Mode Load Voltage

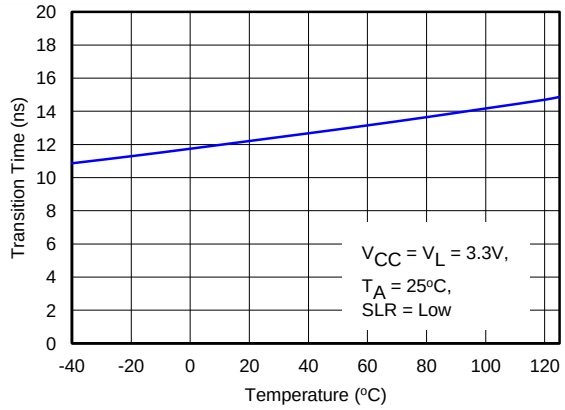

Figure 3. Transition Time vs Temperature

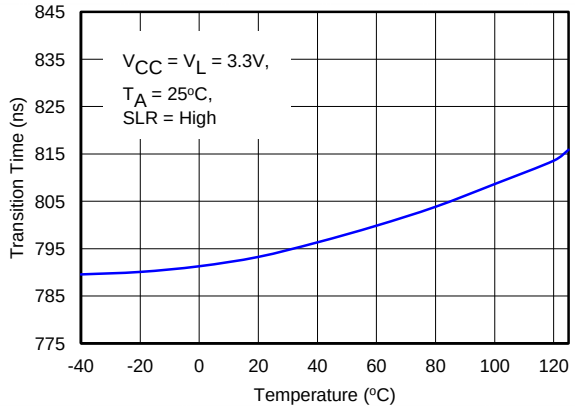

Figure 4. Transition Time vs Temperature

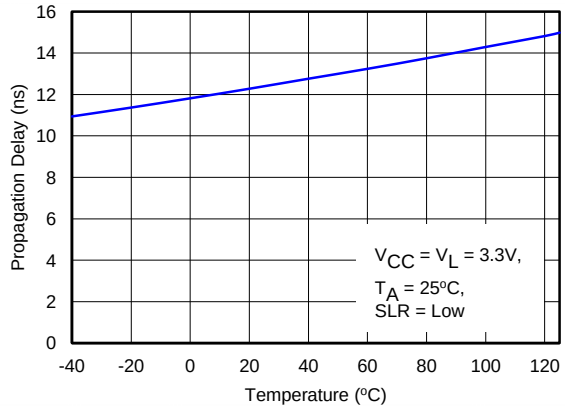

Figure 5. Propagation Delay vs Temperature

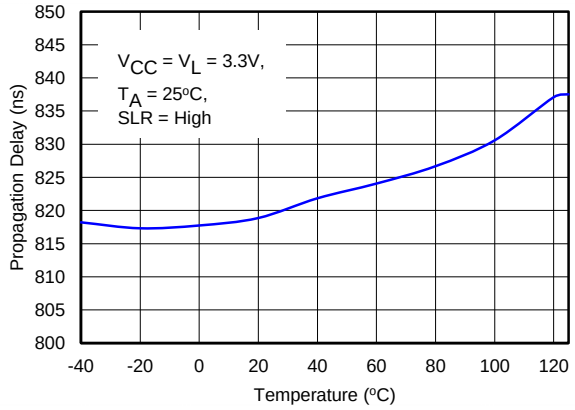

Figure 6. Propagation Delay vs Temperature

Copyright © 2013–2014, Texas Instruments Incorporated

Typical Characteristics (continued)

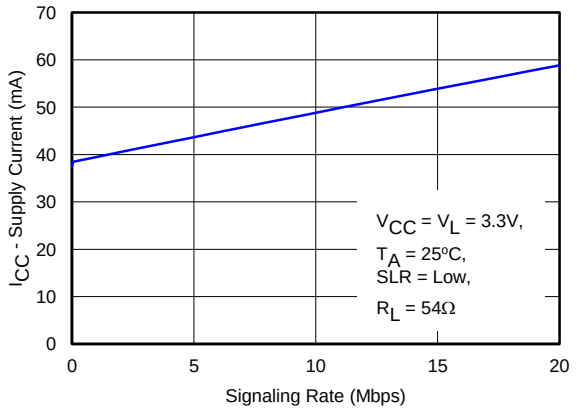

Figure 7. Supply Current vs Signaling Rate

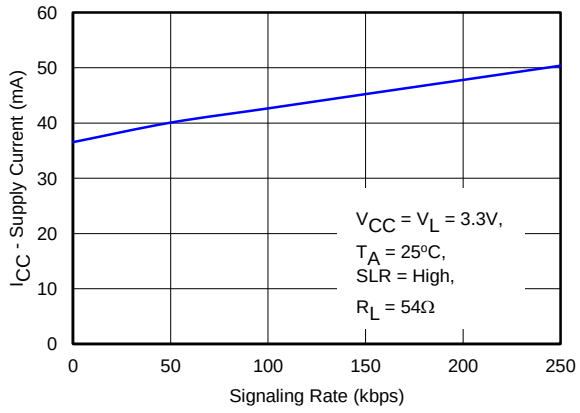

Figure 8. Supply Current vs Signaling Rate

Copyright © 2013–2014, Texas Instruments Incorporated

7 Parameter Measurement Information

Input generator rate is 100 kbps, 50% duty cycle, rise and fall times less than 6 nsec.

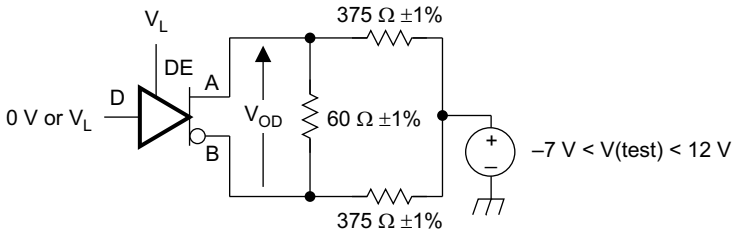

Figure 9. Measurement of Driver Differential Output Voltage with Common-Mode Load

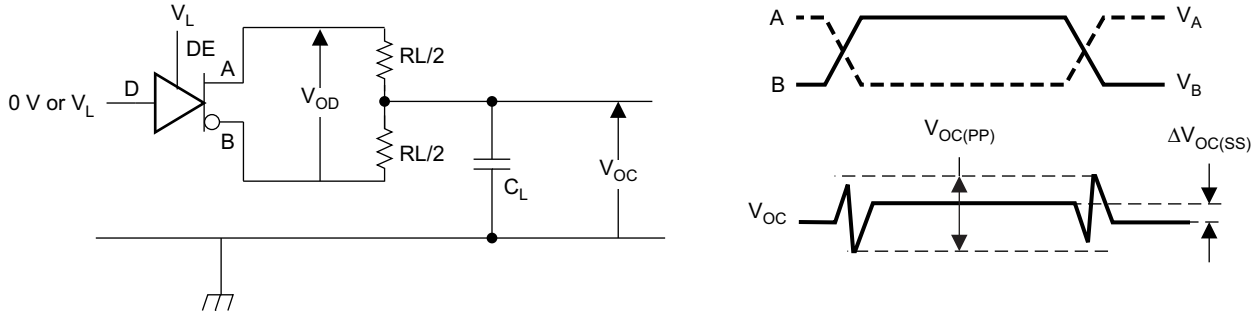

Figure 10. Measurement of Driver Differential and Common-Mode Output with RS-485 Load

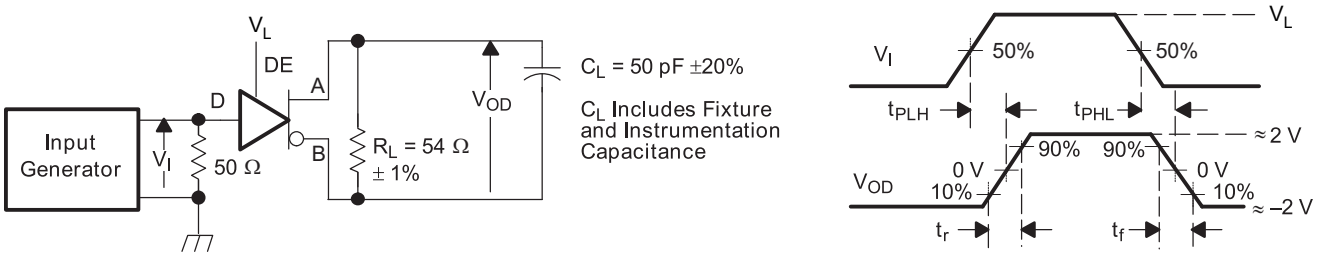

Figure 11. Measurement of Driver Differential Output Rise and Fall Times and Propagation Delays

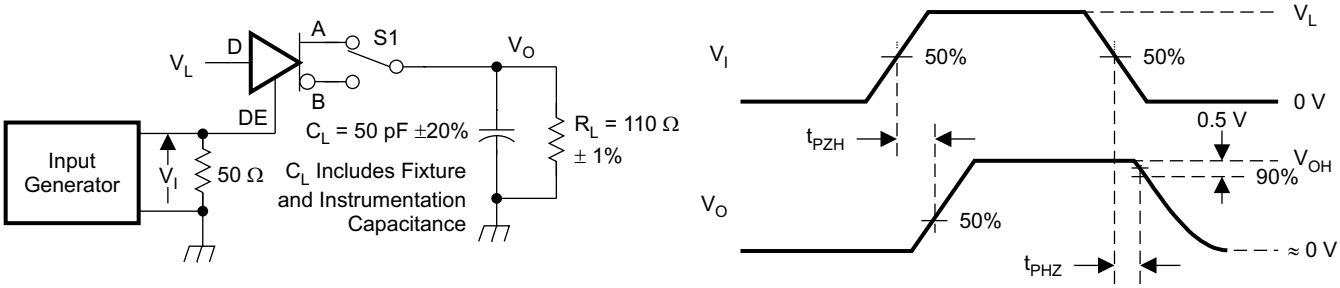

D at V_L to test non-inverting output, D at 0 V to test inverting output.

Figure 12. Measurement of Driver Enable and Disable Times with Active High Output and Pull-Down Load

Parameter Measurement Information (continued)

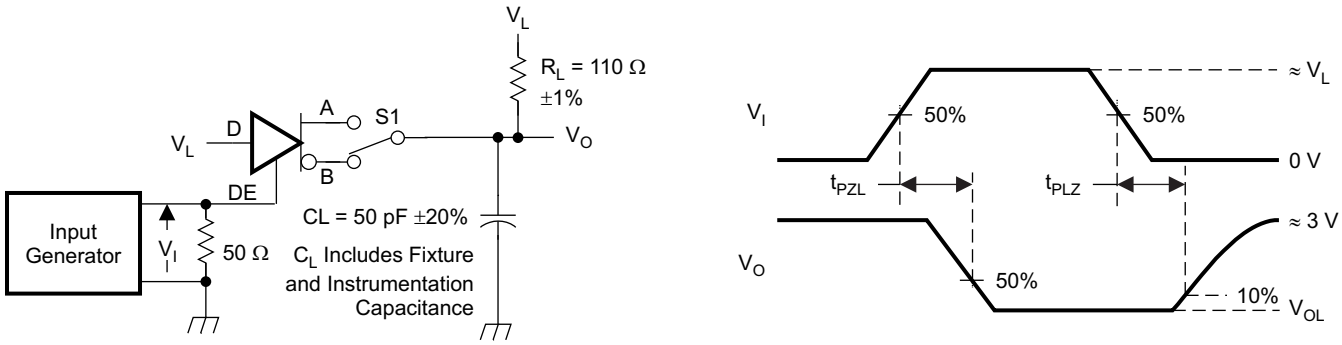

D at 0V to test non-inverting output, D at V_L to test inverting output.

Figure 13. Measurement of Driver Enable and Disable Times with Active Low Output and Pull-Up Load

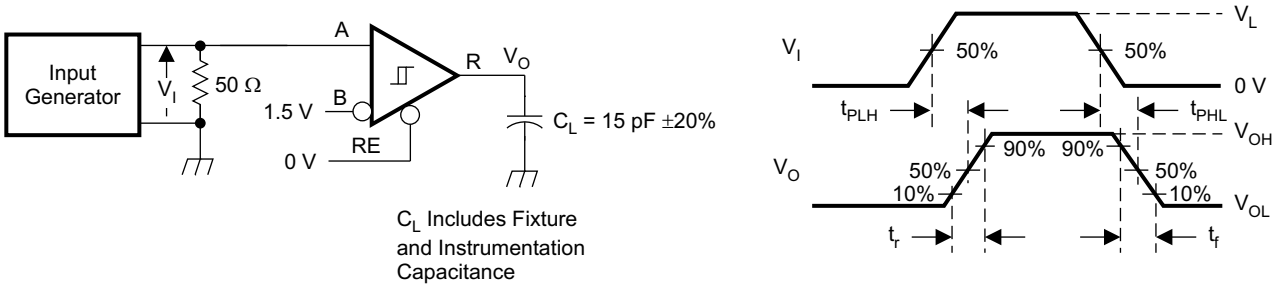

Figure 14. Measurement of Receiver Output Rise and Fall Times and Propagation Delays

Copyright © 2013–2014, Texas Instruments Incorporated

Parameter Measurement Information (continued)

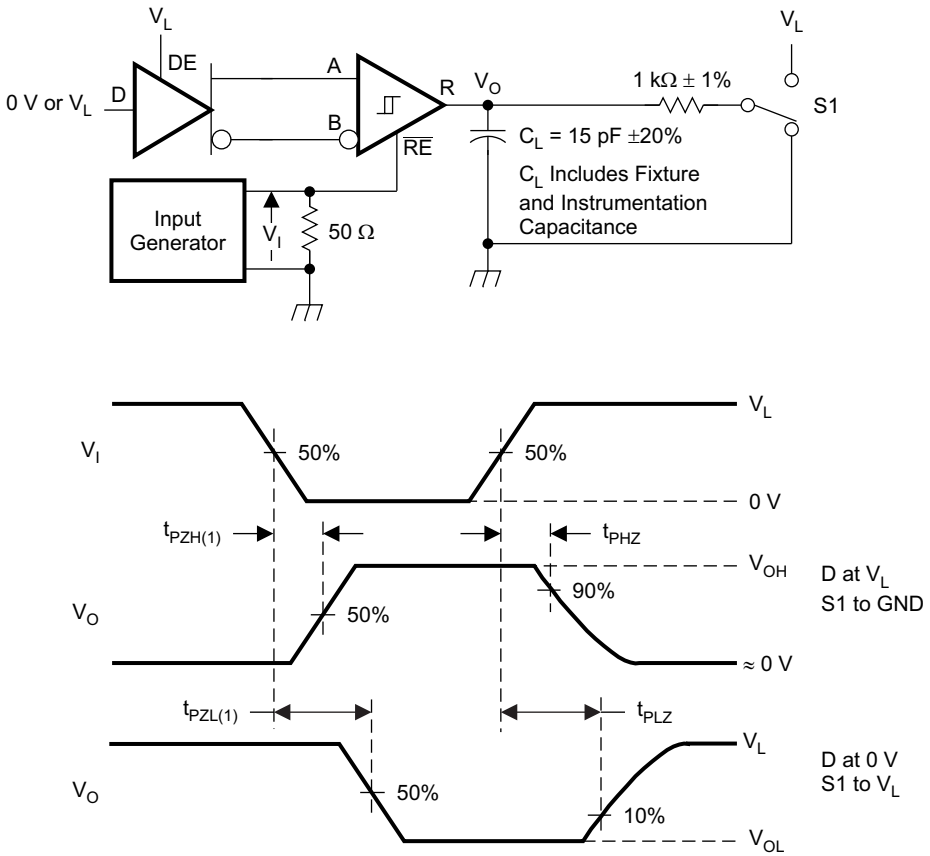

Figure 15. Measurement of Receiver Enable/Disable Times with Driver Enabled

Parameter Measurement Information (continued)

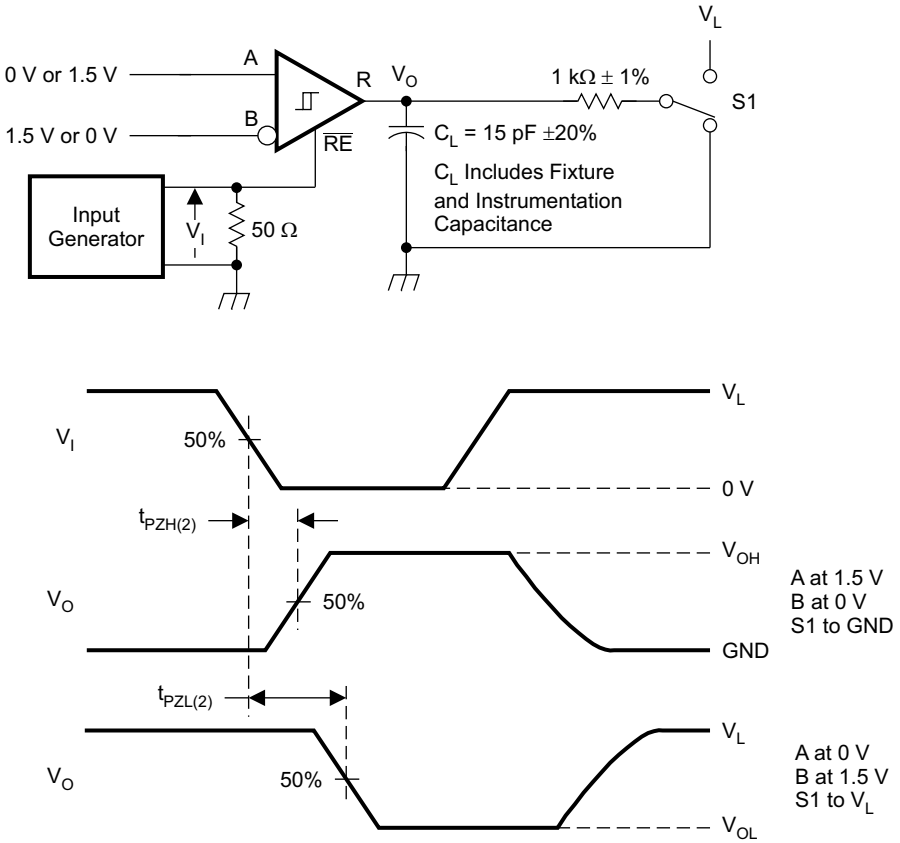

Figure 16. Measurement of Receiver Enable Times with Driver Disabled

Copyright © 2013–2014, Texas Instruments Incorporated

8 Detailed Description

8.1 Overview

The SN65HVD01 is a low-power, half-duplex RS-485 transceiver whose maximum data rate can be set to either 250 kbps or 20 Mbps via a selection terminal, SLR.

The device possesses two power supply inputs, one for logic control functions, V_L, and the other for the bus supply, V_{CC}. V_L can range from 1.65 V minimum up to 3.6 V maximum and allows for the direct interface to low-voltage FPGAs and micro controllers. V_{CC} requires a supply between 3 V to 3.6 V to assure sufficient output drive capability across a wide common-mode range.

8.2 Functional Block Diagram

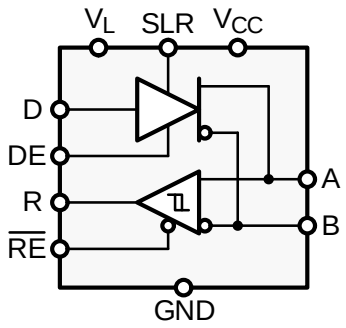

8.3 Feature Description

Internal ESD protection circuits protect the transceiver against Electrostatic discharges (ESD) according to IEC61000-4-2 of up to ±16 kV, and against electrical fast transients (EFT) according to IEC61000-4-4 of up to ±4 kV.

The SN65HVD01 provides internal biasing of the receiver input thresholds in combination with large input-threshold hysteresis. At a positive input threshold of V_{IT+} = –60 mV and an input hysteresis of VHYS = 70 mV, the receiver output remains logic high even in the presence of 130 mV_{PK} differential noise without the need for external failsafe biasing resistors.

Device operation is specified over a wide temperature range from –40°C to 125°C.

8.4 Device Functional Modes

When driver enable terminal, DE, is logic high, the differential outputs A and B follow the logic states at data input D. A logic high at D causes A to turn high and B to turn low. In this case the differential output voltage defined as $V_{OD} = V_A – V_B$ is positive. When D is low, the output states reverse, B turns high, A becomes low, and V_{OD} is negative.

When DE is low, both outputs turn high-impedance. In this condition, the logic state at D is irrelevant. The DE terminal has an internal pull-down resistor to ground, thus when left open the driver is disabled (high-impedance) by default. The D terminal has an internal pull-up resistor to V_L, thus, when left open while the driver is enabled, output A turns high and B turns low.

Table 1. Driver Function Table

INPUT	ENABLE	OUTPUTS		FUNCTION
D	DE	A	B	
H	H	H	L	Actively drive bus High
L	H	L	H	Actively drive bus Low
X	L	Z	Z	Driver disabled
X	OPEN	Z	Z	Driver disabled by default
OPEN	H	H	L	Actively drive bus High by default

Copyright © 2013–2014, Texas Instruments Incorporated

When the receiver enable terminal, $\overline{RE}$, is logic low, the receiver is enabled. When the differential input voltage defined as $V_{ID} = V_A – V_B$ is positive and higher than the positive input threshold, V_{IT+}, the receiver output, R, turns high. When V_{ID} is negative and less than the negative and lower than the negative input threshold, V_{IT-}, the receiver output, R, turns low. If V_{ID} is between V_{IT+} and V_{IT-} the output is indeterminate.

When $\overline{RE}$ is logic high or left open, the receiver output is high-impedance and the magnitude and polarity of V_{ID} are irrelevant. Internal biasing of the receiver inputs causes the output to go failsafe-high when the transceiver is disconnected from the bus (open-circuit), the bus lines are shorted (short-circuit), or the bus is not actively driven (idle bus).

Table 2. Receiver Function Table

DIFFERENTIAL INPUT	ENABLE	OUTPUT	FUNCTION
$V_{ID} = V_A – V_B$	$\overline{RE}$	R	
$V_{IT+} < V_{ID}$	L	H	Receive valid bus High
$V_{IT–} < V_{ID} < V_{IT+}$	L	?	Indeterminate bus state
$V_{ID} < V_{IT–}$	L	L	Receive valid bus Low
X	H	Z	Receiver disabled
X	OPEN	Z	Receiver disabled by default
Open-circuit bus	L	H	Fail-safe high output
Short-circuit bus	L	H	Fail-safe high output
Idle (terminated) bus	L	H	Fail-safe high output

Connecting SLR to V_L limits the maximum data rate to 250 kbps and increases the driver rise and fall times to 800 ns. Connecting SLR to GND increases the upper data rate limit to 20 Mbps and reduces the driver rise and fall times to 10 ns.

Table 3. SLR-Terminal Configuration

SLR-INPUT	DATA RATE	TYP tr / tf
V_L	250 kbps	800 ns
GND or OPEN	20 Mbps	10 ns

Copyright © 2013–2014, Texas Instruments Incorporated

8.4.1 Equivalent Input and Output Schematic Diagrams

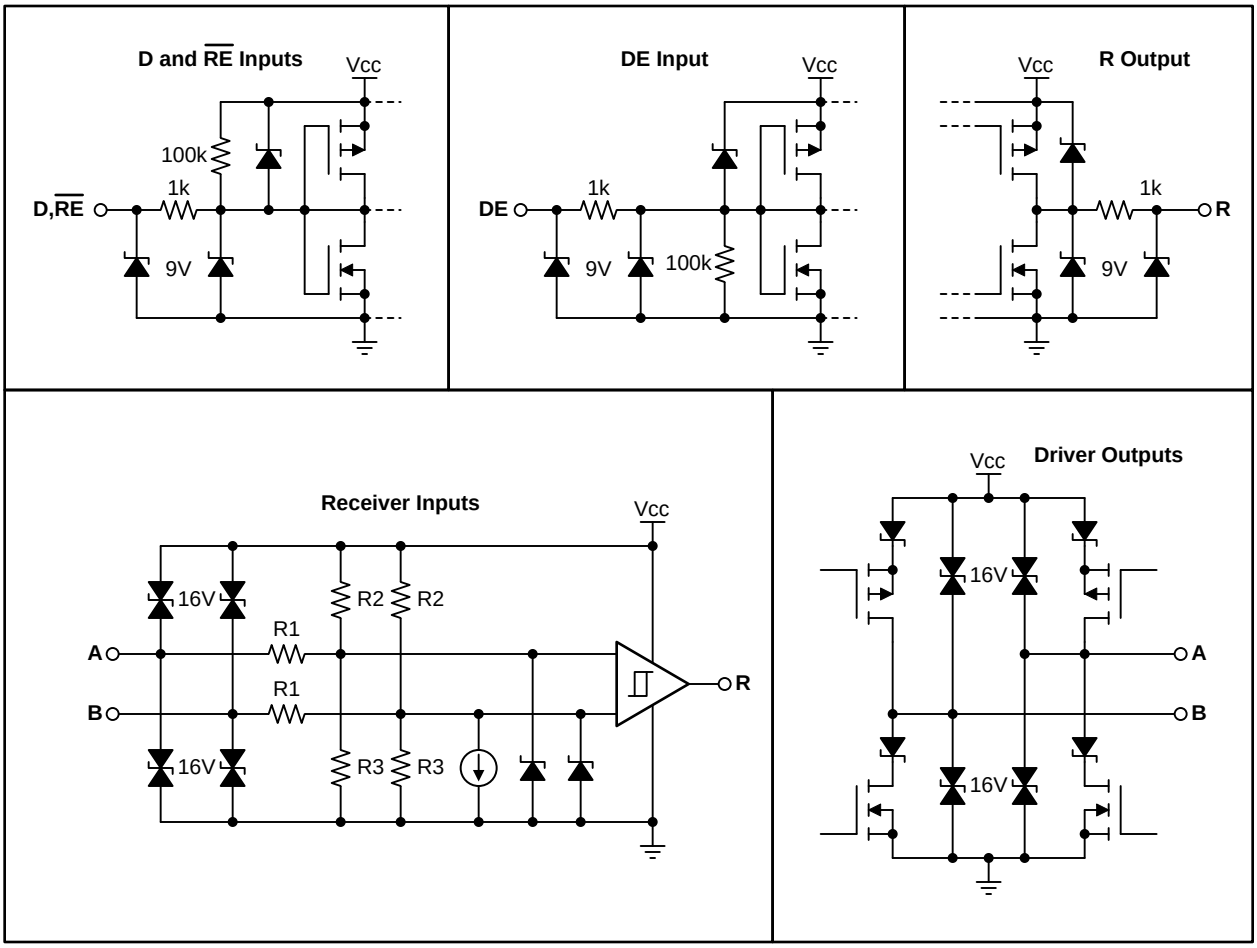

Figure 17. Equivalent Input and Output Schematic Diagrams

9 Applications and Implementation

9.1 Application Information

The SN65HVD01 is a half-duplex RS-485 transceiver commonly used for asynchronous data transmissions. The driver and receiver enable terminals allow for the configuration of different operating modes.

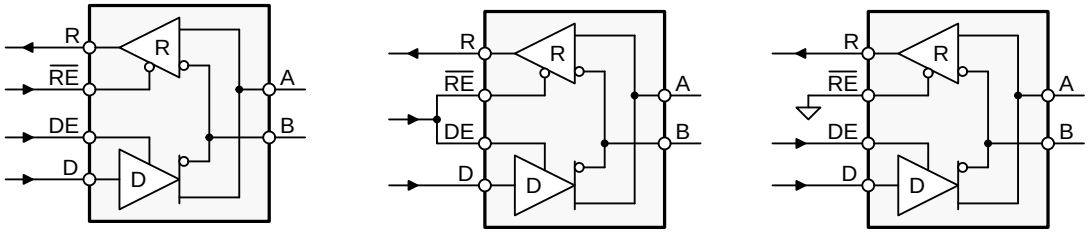

a) *Independent driver and receiver enable signals*

b) *Combined enable signals for use as directional control pin*

c) *Receiver always on*

Figure 18. SN65HVD01 Transceiver Configurations

Using independent enable lines provides the most flexible control as it allows for the driver and the receiver to be turned on and off individually. While this configuration requires two control lines, it allows for selective listening into the bus traffic, whether the driver is transmitting data or not.

Combining the enable signals simplifies the interface to the controller by forming a single, direction-control signal. Thus, when the direction- control line is high, the transceiver is configured as a driver, while for a low the device operates as a receiver.

Tying the receiver-enable to ground and controlling only the driver-enable input, also uses one control line only. In this configuration, a node not only receives the data from the bus but also the data it sends and thus can verify that the correct data have been transmitted.

9.2 Typical Application

An RS-485 bus consists of multiple transceivers connecting in parallel to a bus cable. To eliminate line reflections, each cable end is terminated with a termination resistor, R_T, whose value matches the characteristic impedance, Z_0, of the cable. This method, known as parallel termination, allows for higher data rates over longer cable length.

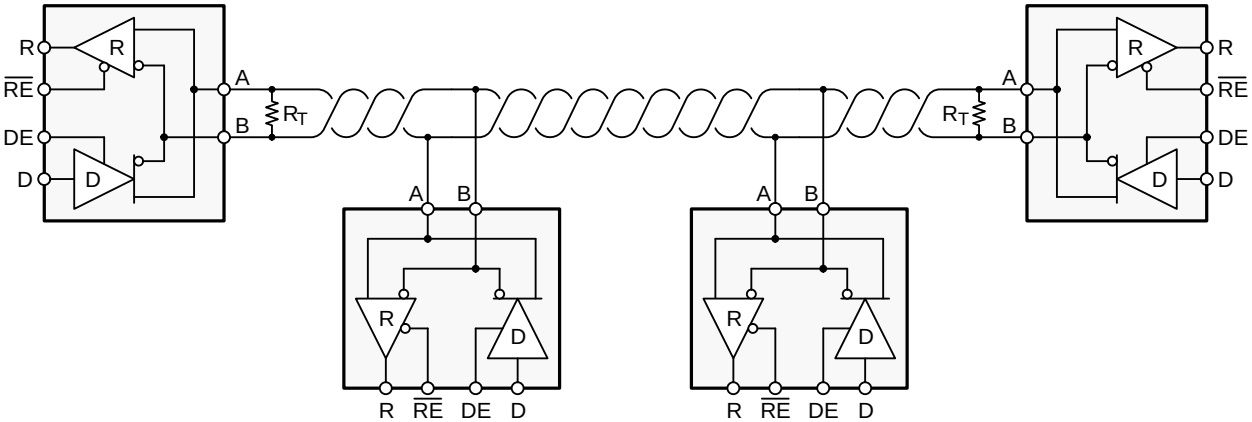

Figure 19. Typical RS-485 Network with SN65HVD01 Transceivers

9.2.1 Design Requirements

RS-485 is a robust electrical standard suitable for long-distance networking that may be used in a wide range of applications with varying requirements, such as distance, data rate, and number of nodes.

Copyright © 2013–2014, Texas Instruments Incorporated

Typical Application (continued)

9.2.1.1 Data Rate and Bus Length

The maximum bus length is limited by the transmission line losses and the signal jitter at a given data rate. Because data reliability sharply decreases for a jitter of 10% or more of the baud period, Figure 20 shows the cable length versus data rate characteristic of a conventional RS-485 cable for signal jitter of 10%.

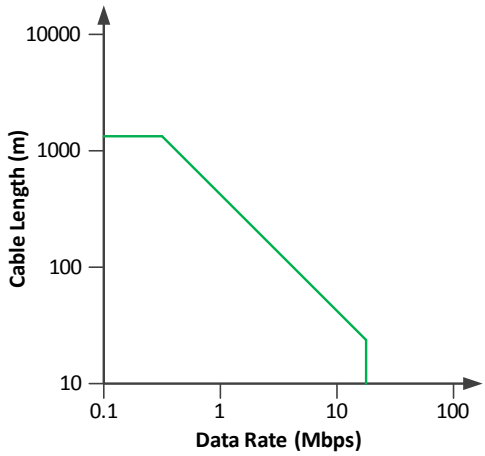

Figure 20. Cable Length vs Data Rate

9.2.1.2 Bus Loading

The RS-485 standard specifies that a compliant driver must be able to drive 32 unit loads (UL), where 1 unit load represents a load impedance of approximately 12kΩ. Because the SN65HVD01 is a 1/8 UL transceiver, it is possible to connect up to 256 devices to the bus.

9.2.2 Detailed Design Procedure

In order to protect bus nodes against high-energy transients, the implementation of external transient protection devices is therefore necessary. Figure 21 suggests a protection circuit against 10 kV ESD, 4 kV EFT, and 1 kV surge transients.

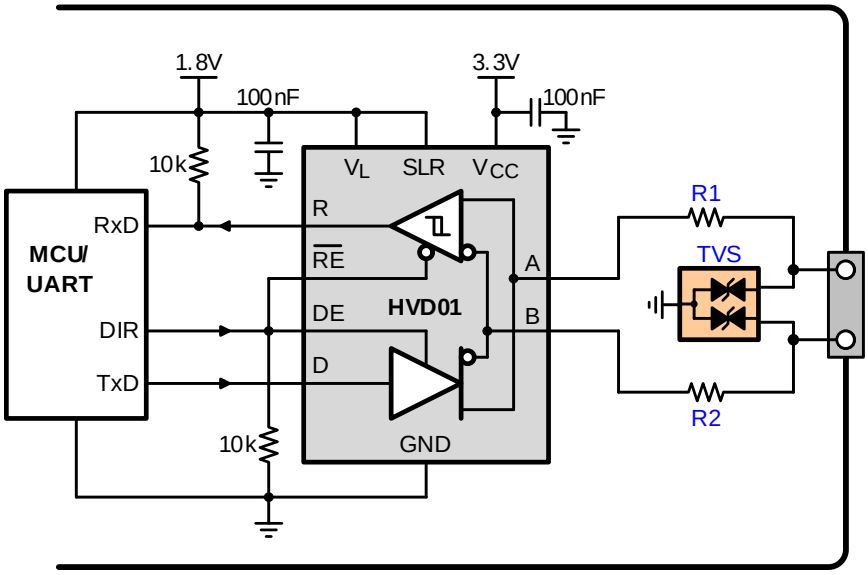

Figure 21. Transient Protection Against ESD, EFT, and Surge Transients

Typical Application (continued)

Table 4. Recommended Materials

Device	Function	Order Number
XCVR	3.3V, 250kbps RS-485 Transceiver	SN65HVD01D
R1,R2	10Ω, Pulse-Proof Thick-Film Resistor	CRCW0603010RJNEAHP
TVS	Bidirectional 400W Transient Suppressor	CDSOT23-SM712

9.2.3 Application Performance Curves

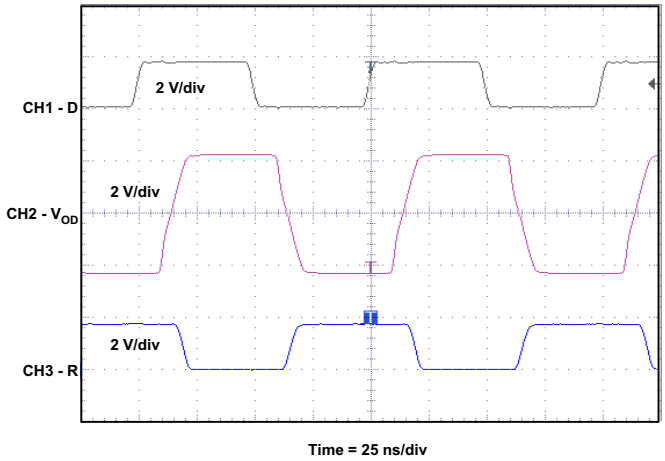

V_{CC} = 3.3 V V_L = 1.8 V SLR = GND

Figure 22. V_{OD} and R Transient Response - 20 Mbps

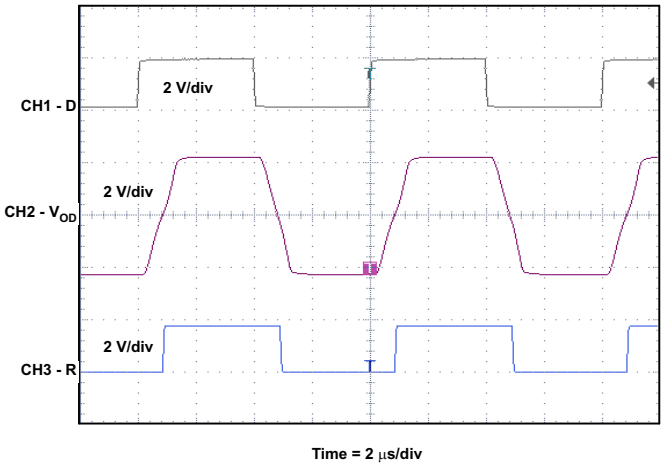

V_{CC} = 3.3 V V_L = 1.8 V SLR = V_L

Figure 23. V_{OD} and R Transient Response - 250 kbps

Copyright © 2013–2014, Texas Instruments Incorporated

10 Power Supply Recommendations

To assure reliable operation at all data rates and supply voltages, each supply should be buffered with a 100 nF ceramic capacitor located as close to the supply terminals as possible. Linear voltage regulators for the 1.8 V logic and 3.3 V bus supplies are TPS76318 and TPS76333 respectively.

11 Layout

On-chip IEC-ESD protection is good for laboratory and portable equipment but never sufficient for EFT and surge transients occurring in industrial environments. Therefore robust and reliable bus node design requires the use of external transient protection devices.

Because ESD and EFT transients have a wide frequency bandwidth from approximately 3 MHz to 3 GHz, high-frequency layout techniques must be applied during PCB design.

In order for your PCB design to be successful start with the design of the protection circuit in mind.

11.1 Layout Guidelines

- Place the protection circuitry close to the bus connector to prevent noise transients from penetrating your board.
- Use V_{CC} and ground planes to provide low-inductance. Note that high-frequency currents follow the path of least inductance and not the path of least impedance.
- Design the protection components into the direction of the signal path. Do not force the transients currents to divert from the signal path to reach the protection device.
- Apply 100 nF to 220 nF bypass capacitors as close as possible to the V_{CC} terminals of transceiver, UART, controller ICs on the board.
- Use at least two vias for V_{CC} and ground connections of bypass capacitors and protection devices to minimize effective via-inductance.
- Use 1k to 10k pull-up/down resistors for enable lines to limit noise currents in theses lines during transient events.
- Insert pulse-proof resistors into the A and B bus lines if the TVS clamping voltage is higher than the specified maximum voltage of the transceiver bus terminals. These resistors limit the residual clamping current into the transceiver and prevent it from latching up.
- While pure TVS protection is sufficient for surge transients up to 1kV, higher transients require metal-oxide varistors (MOVs) which reduce the transients to a few hundred volts of clamping voltage, and transient blocking units (TBUs) that limit transient current to less than 1 mA.

11.2 Layout Example

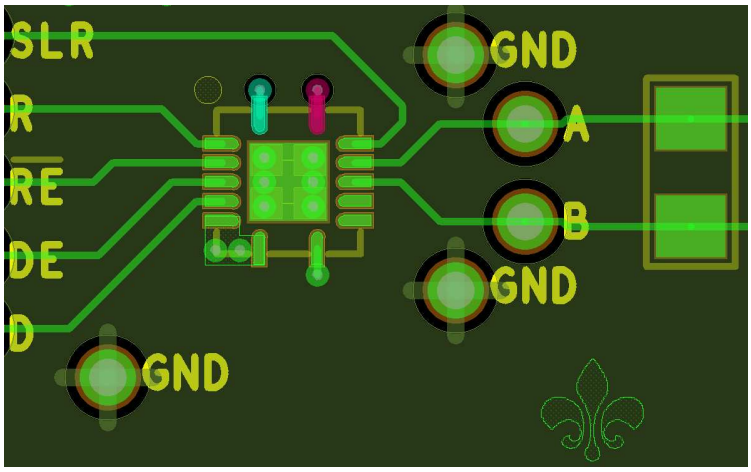

12 器件和文档支持

12.1 商标

All trademarks are the property of their respective owners.

12.2 静电放电警告

这些装置包含有限的内置 ESD 保护。 存储或装卸时，应将导线一起截短或将装置放置于导电泡棉中，以防止 MOS 门极遭受静电损伤。

12.3 术语表

SLYZ022 — *TI 术语表*。

这份术语表列出并解释术语、首字母缩略词和定义。

13 机械封装和可订购信息

以下页中包括机械封装和可订购信息。 这些信息是针对指定器件可提供的最新数据。 这些数据会在无通知且不对本文档进行修订的情况下发生改变。 欲获得该数据表的浏览器版本，请查阅左侧的导航栏。

版权 © 2013–2014, Texas Instruments Incorporated

PACKAGING INFORMATION

Orderable part number	Status (1)	Material type (2)	Package | Pins	Package qty | Carrier	RoHS (3)	Lead finish/ Ball material (4)	MSL rating/ Peak reflow (5)	Op temp (°C)	Part marking (6)
SN65HVD01DRCR	Active	Production	VSON (DRC) | 10	2500 | LARGE T&R	Yes	NIPDAU	Level-1-260C-UNLIM	-40 to 125	HVD01
SN65HVD01DRCR.B	Active	Production	VSON (DRC) | 10	2500 | LARGE T&R	Yes	NIPDAU	Level-1-260C-UNLIM	-40 to 125	HVD01
SN65HVD01DRCRG4.B	Active	Production	VSON (DRC) | 10	2500 | LARGE T&R	Yes	NIPDAU	Level-1-260C-UNLIM	-40 to 125	HVD01
SN65HVD01DRCT	Active	Production	VSON (DRC) | 10	250 | SMALL T&R	Yes	NIPDAU	Level-1-260C-UNLIM	-40 to 125	HVD01
SN65HVD01DRCT.B	Active	Production	VSON (DRC) | 10	250 | SMALL T&R	Yes	NIPDAU	Level-1-260C-UNLIM	-40 to 125	HVD01

(1) **Status:** For more details on status, see our product life cycle.

(2) **Material type:** When designated, preproduction parts are prototypes/experimental devices, and are not yet approved or released for full production. Testing and final process, including without limitation quality assurance, reliability performance testing, and/or process qualification, may not yet be complete, and this item is subject to further changes or possible discontinuation. If available for ordering, purchases will be subject to an additional waiver at checkout, and are intended for early internal evaluation purposes only. These items are sold without warranties of any kind.

(3) **RoHS values:** Yes, No, RoHS Exempt. See the TI RoHS Statement for additional information and value definition.

(4) **Lead finish/Ball material:** Parts may have multiple material finish options. Finish options are separated by a vertical ruled line. Lead finish/Ball material values may wrap to two lines if the finish value exceeds the maximum column width.

(5) **MSL rating/Peak reflow:** The moisture sensitivity level ratings and peak solder (reflow) temperatures. In the event that a part has multiple moisture sensitivity ratings, only the lowest level per JEDEC standards is shown. Refer to the shipping label for the actual reflow temperature that will be used to mount the part to the printed circuit board.

(6) **Part marking:** There may be an additional marking, which relates to the logo, the lot trace code information, or the environmental category of the part.

Multiple part markings will be inside parentheses. Only one part marking contained in parentheses and separated by a "~" will appear on a part. If a line is indented then it is a continuation of the previous line and the two combined represent the entire part marking for that device.

Important Information and Disclaimer: The information provided on this page represents TI's knowledge and belief as of the date that it is provided. TI bases its knowledge and belief on information provided by third parties, and makes no representation or warranty as to the accuracy of such information. Efforts are underway to better integrate information from third parties. TI has taken and continues to take reasonable steps to provide representative and accurate information but may not have conducted destructive testing or chemical analysis on incoming materials and chemicals. TI and TI suppliers consider certain information to be proprietary, and thus CAS numbers and other limited information may not be available for release.

In no event shall TI's liability arising out of such information exceed the total purchase price of the TI part(s) at issue in this document sold by TI to Customer on an annual basis.

TAPE AND REEL INFORMATION

REEL DIMENSIONS

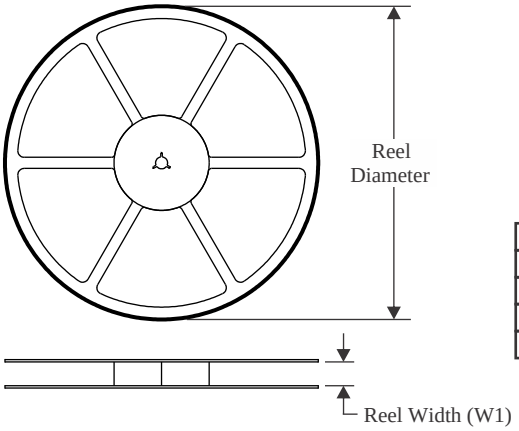

TAPE DIMENSIONS

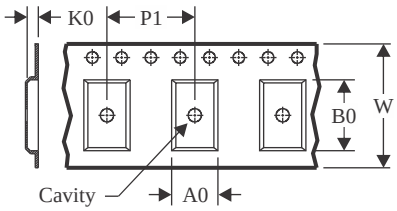

A0	Dimension designed to accommodate the component width
B0	Dimension designed to accommodate the component length
K0	Dimension designed to accommodate the component thickness
W	Overall width of the carrier tape
P1	Pitch between successive cavity centers

QUADRANT ASSIGNMENTS FOR PIN 1 ORIENTATION IN TAPE

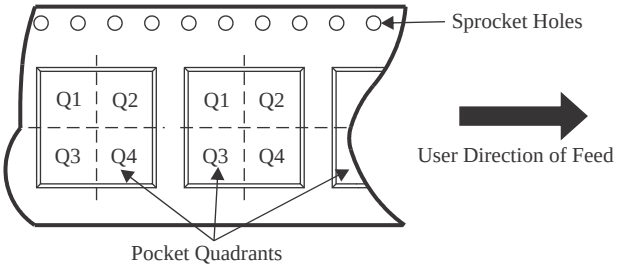

*All dimensions are nominal

Device	Package Type	Package Drawing	Pins	SPQ	Reel Diameter (mm)	Reel Width W1 (mm)	A0 (mm)	B0 (mm)	K0 (mm)	P1 (mm)	W (mm)	Pin1 Quadrant
SN65HVD01DRCR	VSON	DRC	10	2500	330.0	12.4	3.3	3.3	1.1	8.0	12.0	Q2
SN65HVD01DRCT	VSON	DRC	10	250	180.0	12.4	3.3	3.3	1.1	8.0	12.0	Q2

TAPE AND REEL BOX DIMENSIONS

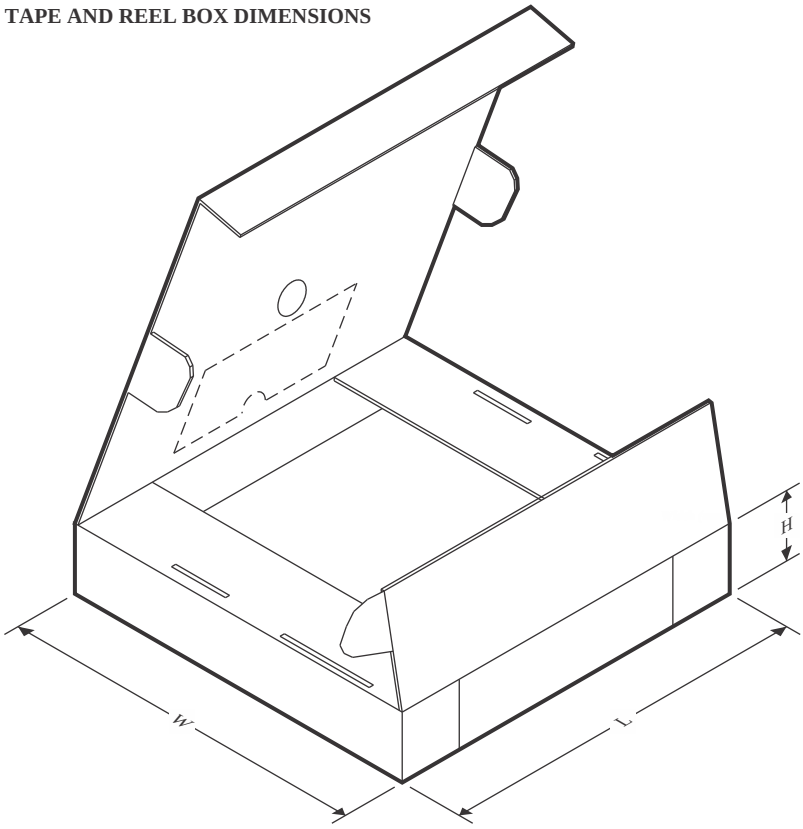

*All dimensions are nominal

Device	Package Type	Package Drawing	Pins	SPQ	Length (mm)	Width (mm)	Height (mm)
SN65HVD01DRCR	VSON	DRC	10	2500	335.0	335.0	25.0
SN65HVD01DRCT	VSON	DRC	10	250	182.0	182.0	20.0

GENERIC PACKAGE VIEW

DRC 10

VSON - 1 mm max height

3 x 3, 0.5 mm pitch

PLASTIC SMALL OUTLINE - NO LEAD

This image is a representation of the package family, actual package may vary.
Refer to the product data sheet for package details.

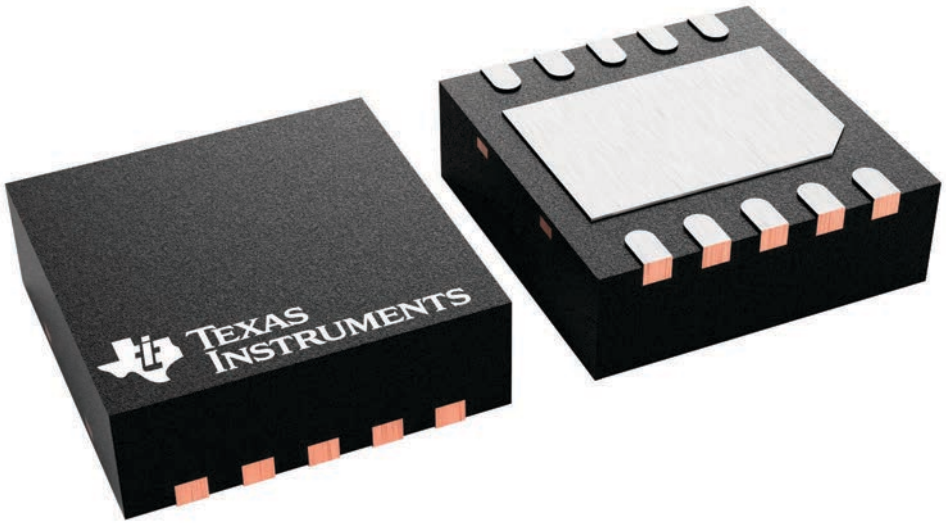

4226193/A

重要通知和免责声明

TI“按原样”提供技术和可靠性数据（包括数据表）、设计资源（包括参考设计）、应用或其他设计建议、网络工具、安全信息和其他资源，不保证没有瑕疵且不做出任何明示或暗示的担保，包括但不限于对适销性、某特定用途方面的适用性或不侵犯任何第三方知识产权的暗示担保。

这些资源可供使用 TI 产品进行设计的熟练开发人员使用。您将自行承担以下全部责任：(1) 针对您的应用选择合适的 TI 产品，(2) 设计、验证并测试您的应用，(3) 确保您的应用满足相应标准以及任何其他功能安全、信息安全、监管或其他要求。

这些资源如有变更，恕不另行通知。TI 授权您仅可将这些资源用于研发本资源所述的 TI 产品的相关应用。 严禁以其他方式对这些资源进行复制或展示。您无权使用任何其他 TI 知识产权或任何第三方知识产权。您应全额赔偿因在这些资源的使用中对 TI 及其代表造成的任何索赔、损害、成本、损失和债务，TI 对此概不负责。

TI 提供的产品受 TI 的销售条款或 ti.com 上其他适用条款/TI 产品随附的其他适用条款的约束。TI 提供这些资源并不会扩展或以其他方式更改 TI 针对 TI 产品发布的适用的担保或担保免责声明。

TI 反对并拒绝您可能提出的任何其他或不同的条款。

邮寄地址：Texas Instruments, Post Office Box 655303, Dallas, Texas 75265
版权所有 © 2025，德州仪器 (TI) 公司