LMX2694-SEP 耐辐射型具有相位同步功能的 15GHz 宽带 PLLatinum™ 射频合成器

1 特性

- VID V62/19616-02XE
- 39.3MHz 至 15.1GHz 输出频率
- 在 100KHz 偏频和 15GHz 载波的情况下具有 -110dBc/Hz 的相位噪声
- 在 8GHz 时，具有 54fs RMS 抖动（100Hz 至 100MHz）
- 可编程输出功率
- PLL 主要规格
  - 品质因数：-236dBc/Hz
  - 归一化 1/f 噪声：-129dBc/Hz
  - 相位检测器频率高达 200MHz
- 跨多个器件实现输出相位同步
- 支持具有 9ps 分辨率可编程延迟的 SYSREF
- 3.3V 单电源运行
- 工作温度范围：-55°C 至 125°C
- 辐射规范
  - 单粒子闩锁 > 43MeV-cm^2/mg
  - 电离辐射总剂量达 30krad (Si)

2 应用

- 命令和数据处理 (C&DH)
- 通信有效载荷
- 光学成像有效载荷
- 雷达成像有效载荷
- 航天和国防

3 说明

LMX2694-SEP 器件是一款集成电压控制振荡器 (VCO) 和稳压器的高性能宽带锁相环 (PLL)，在无倍频器的情况，可输出 39.3MHz 至 15.1GHz 范围内的任意频率，从而无需使用 ½ 谐波滤波器。此器件上的 VCO 涵盖了整个倍频区间，因而频率覆盖度可完全低至 39.3MHz。该高性能 PLL 具有 -236dBc/Hz 的品质因数和高相位检测器频率，可实现非常低的带内噪声和集成抖动。

LMX2694-SEP 允许设计人员同步多个器件实例的输出。这意味着我们可从任意应用情形下的器件中获得确定性相位，包括采用分数引擎或启用输出分频器的情形。该器件还让设计人员可以生成或重复 SYSREF（符合 JESD204B 标准），以便将该器件用作高速数据转换器的低噪声时钟源。

器件信息(1)

器件型号	封装	封装尺寸（标称值）
LMX2694-SEP	VQFN (48)	7.00mm × 7.00mm

(1) 如需了解所有可用封装，请参阅数据表末尾的可订购产品附录。

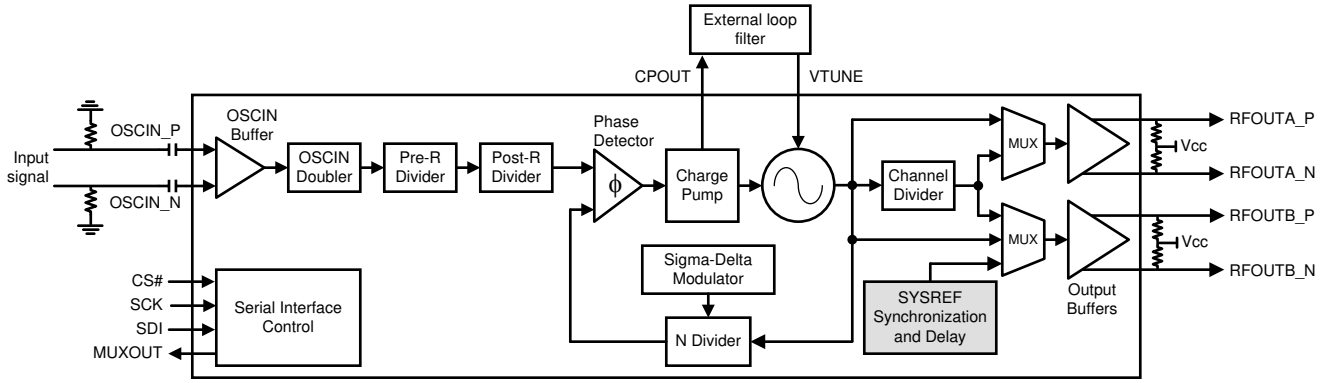

简化版原理图

本文档旨在为方便起见，提供有关 TI 产品中文版本的信息，以确认产品的概要。有关适用的官方英文版本的最新信息，请访问 www.ti.com，其内容始终优先。TI 不保证翻译的准确性和有效性。在实际设计之前，请务必参考最新版本的英文版本。
English Data Sheet: SNAS788

Table of Contents

1 特性.... 1
2 应用.... 1
3 说明.... 1
4 Revision History.... 2
5 Pin Configuration and Functions.... 3
6 Specifications.... 5
6.1 Absolute Maximum Ratings.... 5
6.2 ESD Ratings.... 5
6.3 Recommended Operating Conditions.... 5
6.4 Thermal Information.... 5
6.5 Electrical Characteristics.... 6
6.6 Timing Requirements.... 8
6.7 Timing Diagrams.... 8
6.8 Typical Characteristics.... 10
7 Detailed Description.... 13
7.1 Overview.... 13
7.2 Functional Block Diagram.... 14
7.3 Feature Description.... 14
7.4 Device Functional Modes.... 26
7.5 Programming.... 26
7.6 Register Maps.... 27
8 Application and Implementation.... 72
8.1 Application Information.... 72
8.2 Typical Application.... 76
9 Power Supply Recommendations.... 78
10 Layout.... 79
10.1 Layout Guidelines.... 79
10.2 Layout Example.... 79
11 Device and Documentation Support.... 80
11.1 Device Support.... 80
11.2 Documentation Support.... 80
11.3 接收文档更新通知.... 80
11.4 支持资源.... 80
11.5 Trademarks.... 80
11.6 Electrostatic Discharge Caution.... 80
11.7 术语表.... 80
12 Mechanical, Packaging, and Orderable Information.... 80

4 Revision History

注：以前版本的页码可能与当前版本的页码不同

Changes from Revision B (June 2021) to Revision C (March 2022) — **Page**

- 将*特性* 中的 VID V62/19616 可订购型号更改为“VID V62/19616-02XE”.... 1
- 更改了*应用* 中列出的应用示例.... 1
- 将*器件信息* 表中的 VID V62/19616-02XE 可订购型号移动至数据表末尾的*封装信息* 表.... 1

Changes from Revision A (May 2020) to Revision B (June 2021) — **Page**

- 将器件和文档可见性从定制更改为产品目录.... 1
- 在*特性* 中添加了 VID 文档编号“VID V62/19616”.... 1
- 在*器件信息* 表中添加了可订购器件型号“V62/19616-02XE”.... 1
- Changed the JESD_DACx values in 表 7-15 23
- Changed the R1 register bit name 3 in 图 7-11 from: 1 to: MUXOUT_CTRL.... 37
- Changed the OUTA_MUX register description in 表 7-65 51
- Changed the OUTB_MUX register description in 表 7-66 52

Changes from Revision * (November 2019) to Revision A (May 2020) — **Page**

- 将最大工作温度更改为 125°C.... 1
- 将电离辐射总剂量更改为 30krad(Si).... 1
- Changed maximum T_C to 125°C in Recommended Operating Conditions.... 5
- Changed maximum T_C to 125°C in Electrical Characteristics.... 6
- Changed maximum T_C to 125°C in Timing Requirements.... 8

Copyright © 2022 Texas Instruments Incorporated

5 Pin Configuration and Functions

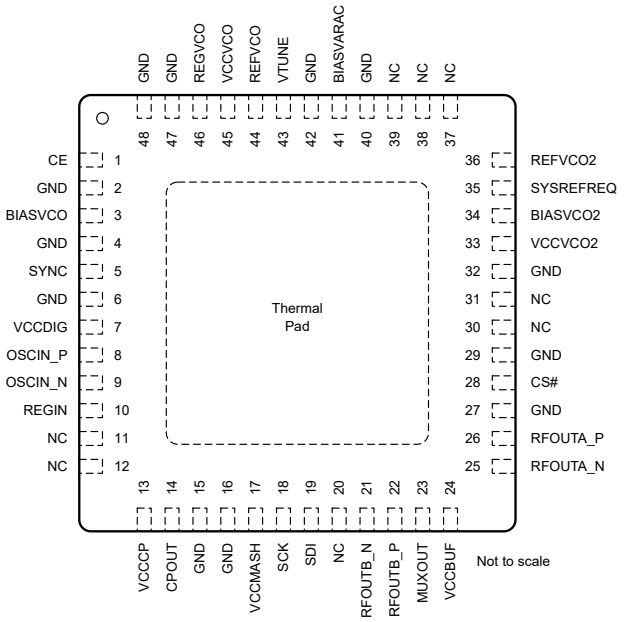

图 5-1. RTC Package 48-Pin VQFN Top View

表 5-1. Pin Functions

PIN		I/O	DESCRIPTION
NAME	NO.		
BIASVARAC	41	BP	VCO varactor bias. Connect a 10-µF decoupling capacitor to ground.
BIASVCO	3	BP	VCO bias. Connect a 10-µF decoupling capacitor to ground. Place close to pin.
BIASVCO2	34	BP	VCO bias. Connect a 1-µF decoupling capacitor to ground. Place close to pin.
CE	1	I	Chip Enable. High impedance CMOS input. 1.8-V to 3.3-V logic. Active HIGH powers on the device.
CPOUT	14	O	Charge pump output. Recommend connecting C1 of loop filter close to this pin.
CS#	28	I	SPI latch. High impedance CMOS input. 1.8-V to 3.3-V logic.
GND	2, 4, 32, 40, 42, 47	G	VCO ground.
GND	6, 16, 48	G	Digital ground.
GND	15	G	Charge pump ground.
GND	27, 29	G	Buffer ground.
MUXOUT	23	O	Multiplexed output. Can output: lock detect, SPI readback and diagnostics.
NC	11, 12, 20, 30, 31, 37, 38, 39	NC	Pins may be grounded or left unconnected.
OSCIN_N	9	I	Reference input clock (–). High impedance self-biasing pin. Requires AC-coupling capacitor. (0.1 µF recommended)
OSCIN_P	8	I	Reference input clock (+). High impedance self-biasing pin. Requires AC-coupling capacitor. (0.1 µF recommended)
REFVCO	44	BP	VCO supply reference. Connect a 10-µF decoupling capacitor to ground.
REFVCO2	36	BP	VCO supply reference. Connect a 10-µF decoupling capacitor to ground.
REGIN	10	BP	Input reference path regulator decoupling. Connect a 1-µF decoupling capacitor to ground. Place close to pin.
REGVCO	46	BP	VCO regulator node. Connect a 1-µF decoupling capacitor to ground.
RFOUTA_N	25	O	Differential output A (–). Requires connecting 50-Ω resistor pullup to V_{CC} as close as possible to pin.

Copyright © 2022 Texas Instruments Incorporated

表 5-1. Pin Functions (continued)

PIN		I/O	DESCRIPTION
NAME	NO.		
RFOUTA_P	26	O	Differential output A (+). Requires connecting 50-Ω resistor pullup to V_{CC} as close as possible to pin.
RFOUTB_N	21	O	Differential output B (–). Requires connecting 50-Ω resistor pullup to V_{CC} as close as possible to pin.
RFOUTB_P	22	O	Differential output B (+). Requires connecting 50-Ω resistor pullup to V_{CC} as close as possible to pin.
SCK	18	I	SPI clock. High impedance CMOS input. 1.8-V to 3.3-V logic.
SDI	19	I	SPI data. High impedance CMOS input. 1.8-V to 3.3-V logic.
SYNC	5	I	Phase synchronization input. Has programmable threshold. Connect to ground if not being used.
SYSREFREQ	35	I	SYSREF request input for JESD204B support. Connect to ground if not being used.
VCCBUF	24	P	Output buffer supply. Connect to 3.3-V and a 0.1-µF decoupling capacitor to ground.
VCCCP	13	P	Charge pump supply. Connect to 3.3-V and a 0.1-µF decoupling capacitor to ground.
VCCDIG	7	P	Digital supply. Connect to 3.3-V and a 0.1-µF decoupling capacitor to ground.
VCCMASH	17	P	Digital supply. Connect to 3.3-V and a 1-µF decoupling capacitor to ground.
VCCVCO	45	P	VCO supply. Connect to 3.3-V and a 1-µF decoupling capacitor to ground.
VCCVCO2	33	P	VCO supply. Connect to 3.3-V and a 1-µF decoupling capacitor to ground.
VTUNE	43	I	VCO tuning voltage input. Connect a 1.5-nF or more capacitor to VCO ground. See *External Loop Filter* for details.
Thermal pad	—	—	Connect the GND pin to the exposed thermal pad for correct operation. Connect the thermal pad to any internal PCB ground plane using multiple vias for good thermal performance.

Copyright © 2022 Texas Instruments Incorporated

6 Specifications

6.1 Absolute Maximum Ratings

over operating free-air temperature range (unless otherwise noted)[1]

		MIN	MAX	UNIT
V_{CC}	Power supply voltage	–0.3	3.6	V
V_{IN}	IO input voltage		V_{CC} + 0.3	V
T_J	Junction temperature	–55	150	°C
T_{stg}	Storage temperature	–65	150	°C

(1) Stresses beyond those listed under *Absolute Maximum Rating* may cause permanent damage to the device. These are stress ratings only, which do not imply functional operation of the device at these or any other conditions beyond those indicated under *Recommended Operating Condition*. Exposure to absolute-maximum-rated conditions for extended periods may affect device reliability.

6.2 ESD Ratings

			VALUE	UNIT
$V_{(ESD)}$	Electrostatic discharge	Human-body model (HBM), per ANSI/ESDA/JEDEC JS-001[1]	±1000	V
		Charged device model (CDM), per JEDEC specification JESD22-C101, all pins[2]	±1000	

(1) JEDEC document JEP155 states that 500 V HBM allows safe manufacturing with a standard ESD control process.
(2) JEDEC document JEP157 states that 250 V CDM allows safe manufacturing with a standard ESD control process.

6.3 Recommended Operating Conditions

over operating free-air temperature range (unless otherwise noted)

		MIN	NOM	MAX	UNIT
T_C	Case temperature	–55		125	°C
V_{CC}	Supply input voltage	3.2	3.3	3.45	V

6.4 Thermal Information

THERMAL METRIC[1]		LMX2694-EP RTC (VQFN) 48 PINS	UNIT
$R_{\theta JA}$	Junction-to-ambient thermal resistance	22.4	°C/W
$R_{\theta JC(top)}$	Junction-to-case (top) thermal resistance	10.0	°C/W
$R_{\theta JB}$	Junction-to-board thermal resistance	6.1	°C/W
Ψ_{JT}	Junction-to-top characterization parameter	0.1	°C/W
Ψ_{JB}	Junction-to-board characterization parameter	6.0	°C/W
$R_{\theta JC(bot)}$	Junction-to-case (bottom) thermal resistance	0.7	°C/W

(1) For more information about traditional and new thermal metrics, see the Semiconductor and IC Package Thermal Metrics application report.

Copyright © 2022 Texas Instruments Incorporated

6.5 Electrical Characteristics

3.2 V ≤ V_{CC} ≤ 3.45 V, –50°C ≤ T_C ≤ 125°C. Typical values are at V_{CC} = 3.3 V, 25°C (unless otherwise noted)

PARAMETER		TEST CONDITIONS		MIN	TYP	MAX	UNIT
POWER SUPPLY							
I_{CC}	Supply current	OUTA_PD = 0; OUTB_PD = 1; OUTA_MUX = OUTB_MUX = 1; OUTA_PWR = 31; CPG = 7; f_{OSC} = f_{PD} = 100 MHz; f_{VCO} = f_{OUT} = 14.5 GHz			360		mA
	Power on reset current	RESET = 1			289		
	Power down current	POWERDOWN = 1			6		
OUTPUT CHARACTERISTICS							
p_{OUT}	Single-ended output power[(1)] [(2)]	50-Ω resistor pull-up OUTx_PWR = 31	f_{OUT} = 8 GHz		2		dBm
			f_{OUT} = 15 GHz		0		
INPUT SIGNAL PATH							
f_{OSC}	Reference input frequency	OSC_2X = 0		5		1000	MHz
		OSC_2X = 1		5		200	
V_{OSC}	Reference input voltage[(3)]	f_{OSC} ≥ 20 MHz		0.4		2	V_{PP}
		10 MHz ≤ f_{OSC} < 20 MHz		0.8		2	
		5 MHz ≤ f_{OSC} < 10 MHz		1.6		2	
PHASE DETECTOR AND CHARGE PUMP							
f_{PD}	Phase detector frequency[(4)]	MASH_ORDER = 0		0.125		250	MHz
		MASH_ORDER > 0		5		200	
I_{CPOUT}	Charge-pump leakage current	CPG = 0			20		nA
	Effective charge pump current	Sum of the up and down currents		3		15	mA
$PN_{PLL_1/f}$	Normalized PLL 1/f noise	f_{PD} = 100 MHz; f_{VCO} = 12 GHz[(5)]			–129		dBc/Hz
PN_{PLL_FOM}	Normalized PLL noise floor				–236		
VCO CHARACTERISTICS							
f_{VCO}	VCO frequency			7550		15100	MHz

Copyright © 2022 Texas Instruments Incorporated

3.2 V ≤ V_{CC} ≤ 3.45 V, –50°C ≤ T_C ≤ 125°C. Typical values are at V_{CC} = 3.3 V, 25°C (unless otherwise noted)

PARAMETER		TEST CONDITIONS		MIN	TYP	MAX	UNIT
PN_{VCO}	VCO phase noise	VCO1 f_{VCO} = 8.1 GHz	100 kHz		–106.5		dBc/Hz
			1 MHz		–128		
			10 MHz		–147.5		
			100 MHz		–154		
		VCO2 f_{VCO} = 9.3 GHz	100 kHz		–105		
			1 MHz		–126.5		
			10 MHz		–146.5		
			100 MHz		–154		
		VCO3 f_{VCO} = 10.4 GHz	100 kHz		–103.5		
			1 MHz		–125.5		
			10 MHz		–146		
			100 MHz		–158		
		VCO4 f_{VCO} = 11.4 GHz	100 kHz		–102.5		
			1 MHz		–124.5		
			10 MHz		–145		
			100 MHz		–160		
		VCO5 f_{VCO} = 12.5 GHz	100 kHz		–100.5		
			1 MHz		–122.5		
			10 MHz		–143.5		
			100 MHz		–154.5		
		VCO6 f_{VCO} = 13.6 GHz	100 kHz		–99.5		
			1 MHz		–122		
			10 MHz		–142.5		
			100 MHz		–154		
		VCO7 f_{VCO} = 14.7 GHz	100 kHz		–98		
			1 MHz		–120.5		
			10 MHz		–141.5		
			100 MHz		–155		
t_{VCOCAL}	VCO calibration time[6]	Switch across the entire frequency band; f_{OSC} = f_{PD} = 100 MHz; VCO_SEL = 7			650		µs
K_{VCO}	VCO Gain	8.1 GHz			94		MHz/V
		9.3 GHz			106		
		10.4 GHz			122		
		11.4 GHz			148		
		12.5 GHz			185		
		13.6 GHz			202		
		14.7 GHz			233		
$\|\Delta T_{CL}\|$	Allowable temperature drift	VCO not being re-calibrated			125		°C
H2	VCO second harmonic	f_{VCO} = 8 GHz; divider disabled			–30		dBc
H3	VCO third harmonic	f_{VCO} = 8 GHz; divider disabled			–25		
DIGITAL INTERFACE							
V_{IH}	High-level input voltage			1.4			V
V_{IL}	Low-level input voltage					0.4	V
I_{IH}	High-level input current			–100		100	µA
I_{IL}	Low-level input current			–100		100	µA

Copyright © 2022 Texas Instruments Incorporated

3.2 V ≤ V_{CC} ≤ 3.45 V, –50°C ≤ T_C ≤ 125°C. Typical values are at V_{CC} = 3.3 V, 25°C (unless otherwise noted)

PARAMETER		TEST CONDITIONS		MIN	TYP	MAX	UNIT
V_{OH}	High-level output voltage	Load current = –5 mA	MUXOUT pin	V_{CC} – 0.6			V
V_{OL}	High-level output current	Load current = 5 mA				0.6	V

(1) Single ended output power obtained after de-embedding microstrip trace losses and matching with a manual tuner. Unused port terminated to 50-Ω load.
(2) Output power, spurs, and harmonics can vary based on board layout and components.
(3) Single-ended AC coupled sine wave input with complementary side AC coupled to ground with 50-Ω resistor.
(4) For lower VCO frequencies, the N divider minimum value can limit the phase-detector frequency.
(5) The PLL noise contribution is measured using a clean reference and a wide loop bandwidth and is composed into flicker and flat components. PLL_flat = PLL_FOM + 20 x log(f_{VCO}/f_{PD}) + 10 x log(f_{PD}/1 Hz). PLL_flicker (offset) = PLL_1/f + 20 x log(f_{VCO}/1 GHz) - 10 x log(offset/10 kHz). Once these two components are found, the total PLL noise can be calculated as PLL_Noise = 10 x log($10^{PLL_Flat/10} + 10^{PLL_flicker/10}$).
(6) See 节 7.3.7.1 for details.

6.6 Timing Requirements

3.2 V ≤ V_{CC} ≤ 3.45 V, –50°C ≤ T_C ≤ 125°C. Typical values are at V_{CC} = 3.3 V, 25°C (unless otherwise noted)

			MIN	NOM	MAX	UNIT
SYNC AND SYSREFREQ TIMING						
t_{SETUP}	Setup time for pin relative to OSCIN rising edge	See 图 6-1	9			ns
t_{HOLD}	Hold time for pin relative to OSCIN rising edge		4			ns
DIGITAL INTERFACE WRITE SPECIFICATIONS						
f_{SPI}Write	SPI write speed	t_{CWL} + t_{CWH} ≥ 25 ns			40	MHz
t_{CE}	Clock to enable low time	See 图 6-2	5			ns
t_{CS}	Data to clock setup time		2			ns
t_{CH}	Data to clock hold time		2			ns
t_{CWH}	Clock pulse width high		5			ns
t_{CWL}	Clock pulse width low		5			ns
t_{CES}	Enable to clock setup time		5			ns
t_{EWH}	Enable pulse width high		2			ns
DIGITAL INTERFACE READBACK SPECIFICATIONS						
f_{SPI}Readback	SPI readback speed	See 图 6-3			40	MHz
t_{CE}	Clock to enable low time		5			ns
t_{CS}	Clock to data wait time		2			ns
t_{CH}	Clock to data hold time		2			ns
t_{CWH}	Clock pulse width high		10			ns
t_{CWL}	Clock pulse width low		10			ns
t_{CES}	Enable to clock setup time		5			ns
t_{EWH}	Enable pulse width high		2			ns
t_{CD}	Falling clock edge to data wait time				8	ns

6.7 Timing Diagrams

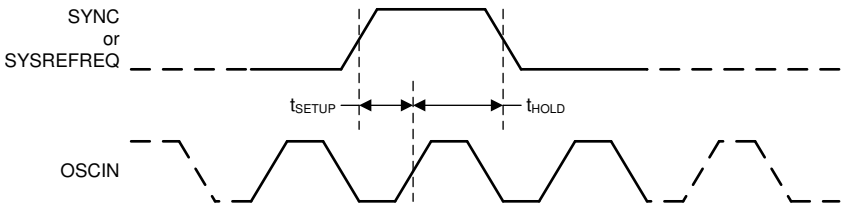

图 6-1. Trigger Signals Timing Diagram

Copyright © 2022 Texas Instruments Incorporated

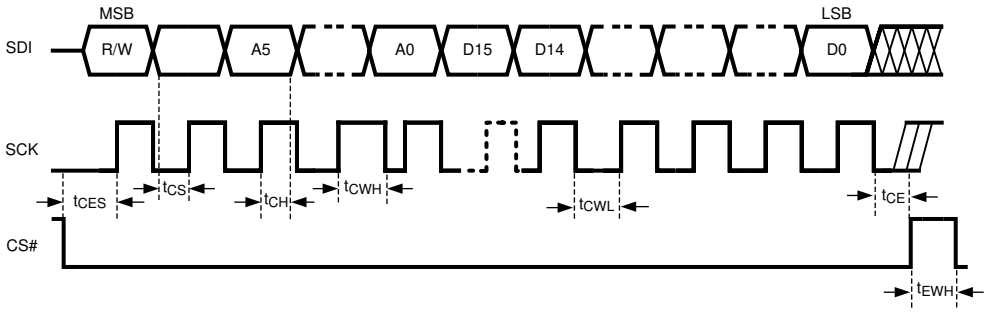

图 6-2. Serial Data Input Timing Diagram

There are several other considerations for writing on the SPI:

- The R/W bit must be set to 0.
- The data on SDI pin is clocked into a shift register on each rising edge on the SCK pin.
- The CS# must be held low for data to be clocked. Device will ignore clock pulses if CS# is held high.
- The CS# transition from high to low must occur when SCK is low.
- When SCK and SDI lines are shared between devices, TI recommends to hold the CS# line high on the device that is not to be clocked.

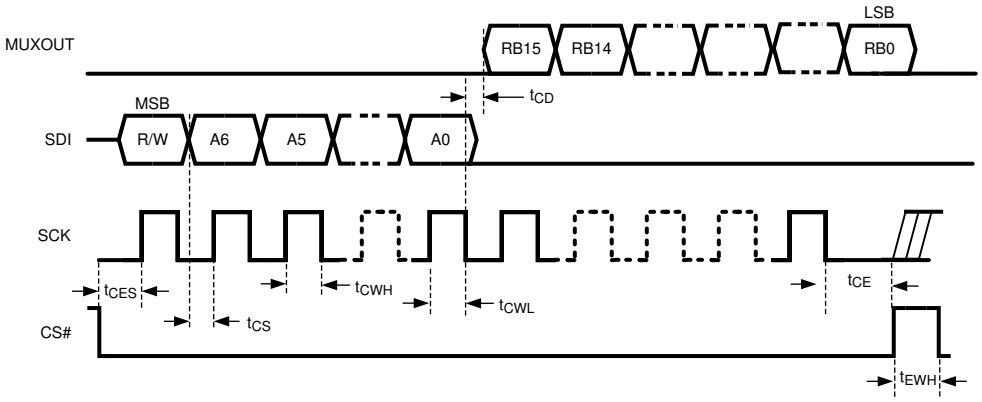

图 6-3. Serial Data Readback Timing Diagram

There are several other considerations for SPI readback:

- The R/W bit must be set to 1.
- The MUXOUT pin will always be low for the address portion of the transaction.
- The data on MUXOUT becomes available momentarily after the falling edge of SCK, and therefore, should be read back on the rising edge of SCK.
- The data portion of the transition on the SDI line is always ignored.

6.8 Typical Characteristics

At T_A = 25°C, unless otherwise noted

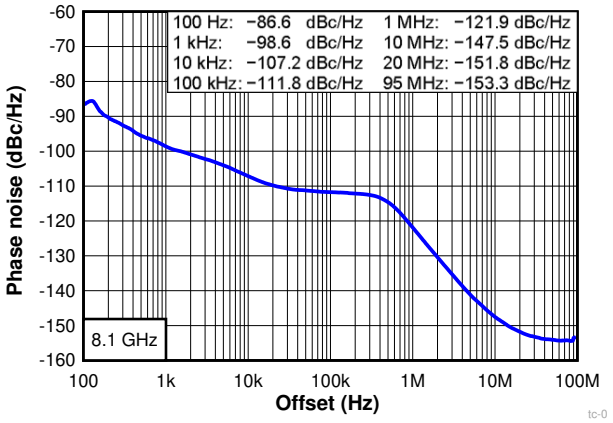

f_{OSC} = 100 MHz Jitter = 61.2 fs (100 Hz - 100 MHz)
f_{PD} = 200 MHz

图 6-4. Closed Loop Phase Noise at 8.1 GHz

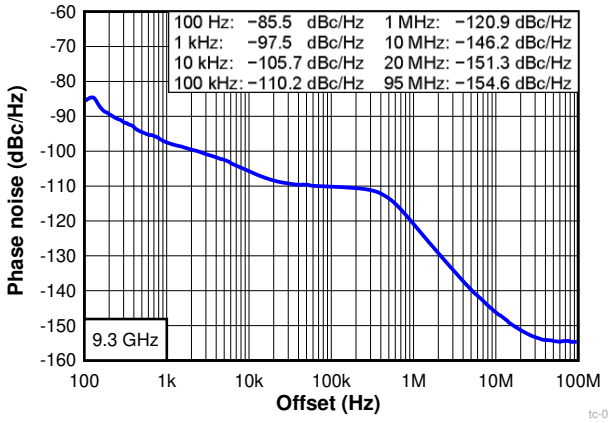

f_{OSC} = 100 MHz Jitter = 61.8 fs (100 Hz - 100 MHz)
f_{PD} = 200 MHz

图 6-5. Closed Loop Phase Noise at 9.3 GHz

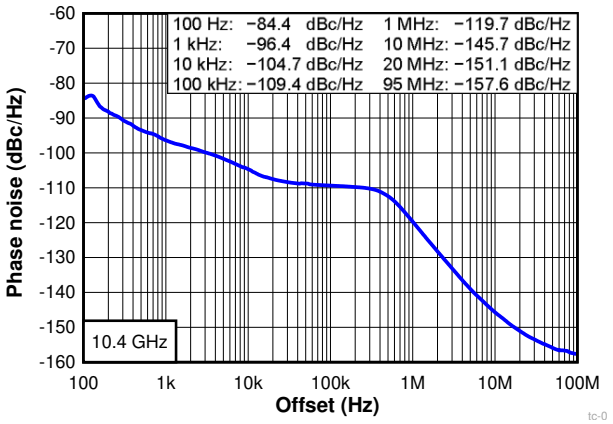

f_{OSC} = 100 MHz Jitter = 61.8 fs (100 Hz - 100 MHz)
f_{PD} = 200 MHz

图 6-6. Closed Loop Phase Noise at 10.4 GHz

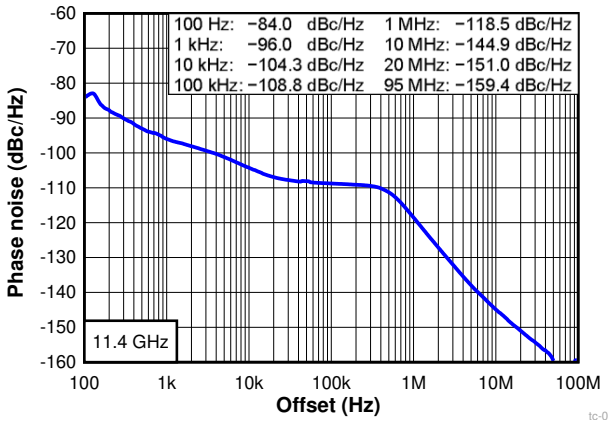

f_{OSC} = 100 MHz Jitter = 61.7 fs (100 Hz - 100 MHz)
f_{PD} = 200 MHz

图 6-7. Closed Loop Phase Noise at 11.4 GHz

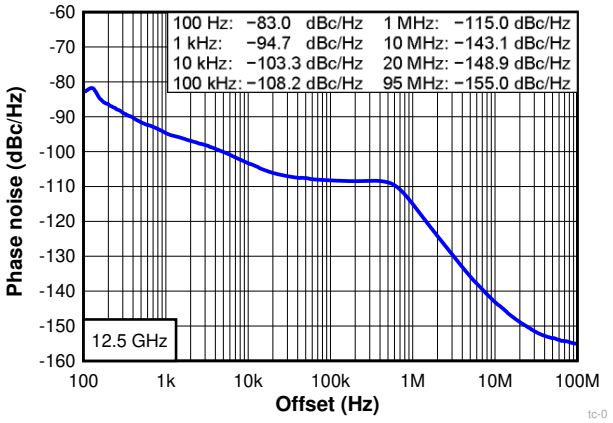

f_{OSC} = 100 MHz Jitter = 68.8 fs (100 Hz - 100 MHz)
f_{PD} = 200 MHz

图 6-8. Closed Loop Phase Noise at 12.5 GHz

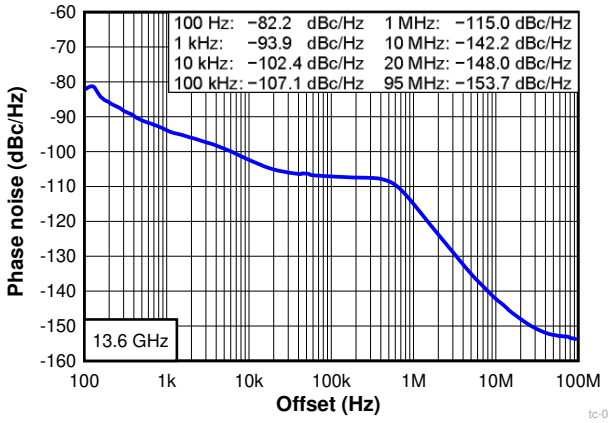

f_{OSC} = 100 MHz Jitter = 67.8 fs (100 Hz - 100 MHz)
f_{PD} = 200 MHz

图 6-9. Closed Loop Phase Noise at 13.6 GHz

Copyright © 2022 Texas Instruments Incorporated

6.8 Typical Characteristics (continued)

At T_A = 25°C, unless otherwise noted

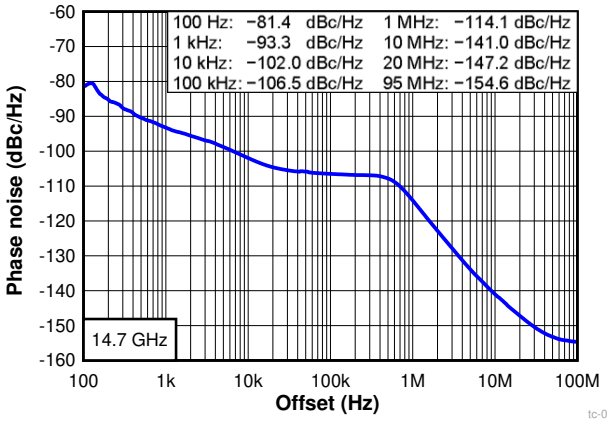

f_{OSC} = 100 MHz Jitter = 67.8 fs (100 Hz - 100 MHz)
f_{PD} = 200 MHz

图 6-10. Closed Loop Phase Noise at 14.7 GHz

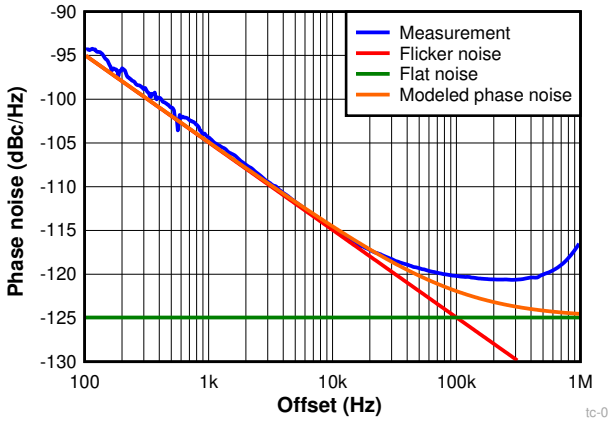

f_{PD} = 200 MHz FOM = –237.5 dBc/Hz
f_{VCO} = 10 GHz Flicker = –130.5 dBc/Hz

图 6-11. Calculation of PLL Noise Metrics

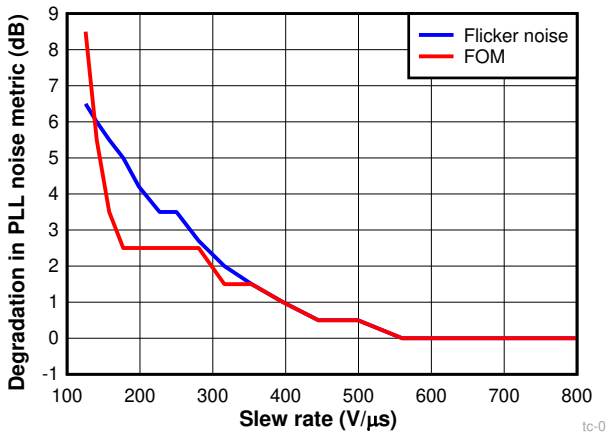

f_{OSC} = 200 MHz
f_{VCO} = 14.8 GHz

图 6-12. PLL Phase Noise Metrics vs f_{osc} Slew Rate

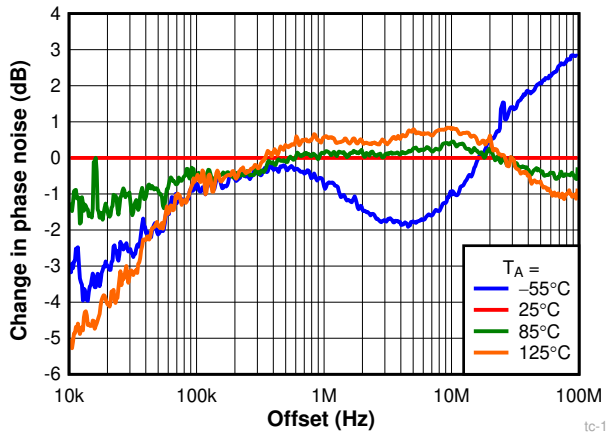

f_{VCO} = 10 GHz VCO re-calibrated at final temperature
LBW < 100 Hz

图 6-13. Change in VCO Phase Noise Over Temperature

6.8 Typical Characteristics (continued)

At T_A = 25°C, unless otherwise noted

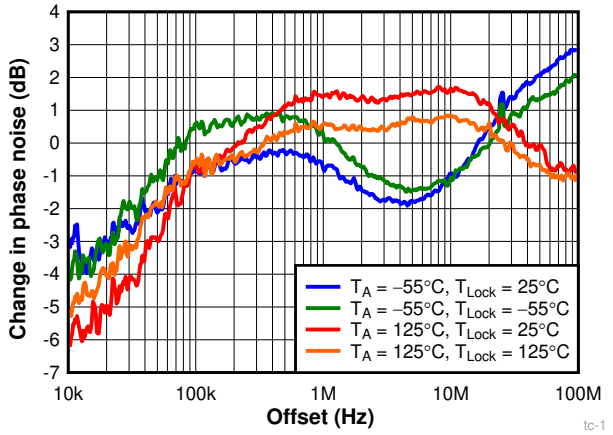

f_{VCO} = 10 GHz
LBW < 100 Hz
VCO calibrated at 25°C and temperature drifted

图 6-14. Change in VCO Phase Noise Over Temperature

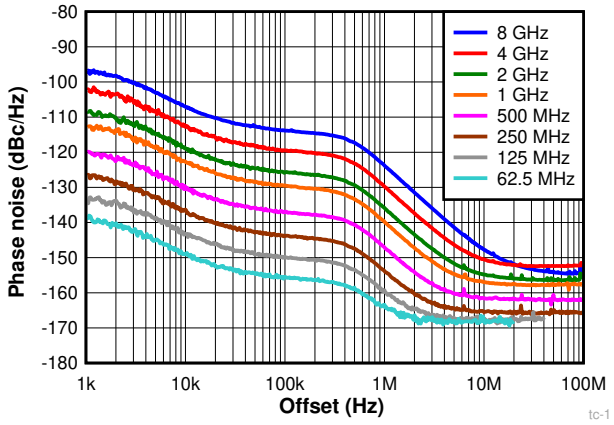

图 6-15. Divided Output Frequency

Copyright © 2022 Texas Instruments Incorporated

7 Detailed Description

7.1 Overview

The LMX2694-SEP is a high-performance, wideband frequency synthesizer with an integrated VCO and output divider. The VCO operates from 7550 to 15100 MHz, and can be combined with the output divider to produce any frequency in the range of 39.3 MHz to 15.1 GHz. There are two dividers within the input path.

The PLL is fractional-N PLL with a programmable delta-sigma modulator up to the 3rd order. The fractional denominator is a programmable 32-bit long that can provide fine frequency steps easily below 1-Hz resolution, as well as be used to do exact fractions like 1/3, 7/1000, and so on.

For applications where deterministic or adjustable phase is desired, the SYNC pin can be used to get the phase relationship between the OSCIN and RFOUTx pins deterministic. Once this is done, the phase can be adjusted in very fine steps of the VCO period divided by the fractional denominator.

The ultra-fast VCO calibration is designed for applications where the frequency must be swept or abruptly changed. The frequency can be manually programmed.

For JESD204B support, the RFOUTB output can be used as a differential SYSREF output that can be either a single pulse or a series of pulses that occur at a programmable distance away from the rising edges of the output signal.

The LMX2694-SEP device requires only a single 3.3-V power supply. The internal power supplies are provided by integrated LDOs, eliminating the need for high-performance external LDOs.

表 7-1 shows the range of several of the doubler, dividers, and fractional settings.

表 7-1. Range of Doubler, Divider, and Fractional Settings

PARAMETER	MIN	MAX	COMMENTS
OSCIN doubler	0 (1X)	1 (2X)	The low noise doubler can be used to increase the phase detector frequency to improve phase noise and avoid spurs. This is in reference to the OSC_2X bit.
Pre-R divider	1 (bypass)	128	Only use the Pre-R divider if the input frequency is too high for the Post-R divider.
Post-R divider	1 (bypass)	255	The maximum input frequency for the Post-R divider is 250 MHz. Use the Pre-R divider if necessary.
N divider	≥ 28	524287	The minimum divide depends on modulator order and VCO frequency. See *N Divider and Fractional Circuitry* for more details.
Fractional numerator / denominator	1 (integer mode)	$2^{32} – 1 = 4294967295$	The fractional denominator is programmable and can assume any value between 1 and $2^{32}– 1$. It is not a fixed denominator.
Fractional order	0	3	Order 0 is integer mode, and the order can be programmed.
Channel divider	1 (bypass)	192	This is the series of several dividers. Also, be aware that above 10 GHz, the maximum allowable channel divider value is 6.
Output frequency	39.3 MHz	15.1 GHz	This is implied by the minimum VCO frequency divided by the maximum channel divider value.

7.2 Functional Block Diagram

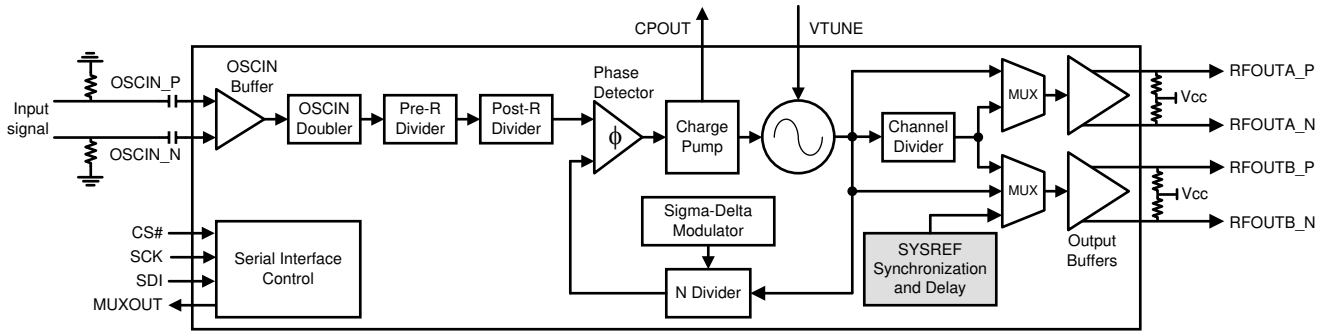

7.3 Feature Description

7.3.1 Reference Oscillator Input

The OSCIN pins are used as a frequency reference input to the device. The input is high impedance and requires AC-coupling caps at the pin. The OSCIN pins can be driven single-ended with a CMOS clock or XO. Differential clock input is also supported, making it easier to interface with high-performance system clock devices such as TI's LMK series clock devices. As the OSCIN signal is used as a clock for the VCO calibration, a proper reference signal must be applied at the OSCIN pin at the time of programming FCAL_EN.

7.3.2 Reference Path

The reference path consists of an OSCIN doubler (OSC_2X), Pre-R divider, and a Post-R divider.

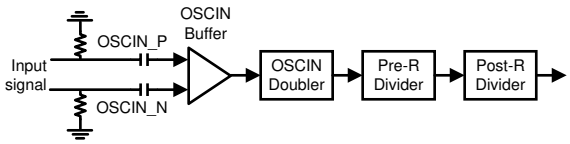

图 7-1. Reference Path Diagram

The OSCIN doubler (OSC_2X) can double up low OSCIN frequencies. Pre-R (PLL_R_PRE) and Post-R (PLL_R) dividers both divide frequency down. Use 方程式 1 to calculate the phase detector frequency, f_{PD}:

$$f_{PD} = f_{OSC} \times OSC_2X / (PLL_R_PRE \times PLL_R) \quad (1)$$

- If the OSCIN doubler is used, the OSCIN signal should have a 50% duty cycle as both the rising and falling edges are used.
- If the OSCIN doubler is not used, only rising edges of the OSCIN signal are used and duty cycle is not critical.

7.3.2.1 OSCIN Doubler (OSC_2X)

The OSCIN doubler allows the user to double the input reference frequency at up to 400 MHz, while adding minimal noise. It may be advantageous to use the doubler to go higher than the maximum phase detector frequency in some situations, because the Pre-R divider may be able to divide down this frequency to a phase detector frequency that is advantageous for fractional spurs.

7.3.2.2 Pre-R Divider (PLL_R_PRE)

The Pre-R divider is useful for reducing the input frequency to help meet the maximum 250-MHz input frequency limitation to the PLL-R divider. Otherwise, it does not have to be used.

7.3.2.3 Post-R Divider (PLL_R)

The Post-R divider can be used to further divide down the frequency to the phase detector frequency. When PLL_R > 1, the input frequency to this divider is limited to 250 MHz.

Copyright © 2022 Texas Instruments Incorporated

7.3.3 State Machine Clock

The state machine clock is a divided-down version of the OSCIN signal that is used internally in the device. This divide value 1, 2, 4, 8, 16, or 32 and is determined by CAL_CLK_DIV programming word (described in the *Programming* section). This state machine clock impacts various features like the VCO calibration. The state machine clock is calculated as $f_{SM} = f_{OSC} / 2^{CAL_CLK_DIV}$.

7.3.4 PLL Phase Detector and Charge Pump

The phase detector compares the outputs of the Post-R divider and N divider, and will generate a correction current corresponding to the phase error until the two signals are aligned in-phase. This charge-pump current is software-programmable to many different levels, which allows the user to modify the closed-loop bandwidth of the PLL.

7.3.5 N Divider and Fractional Circuitry

The N divider includes fractional compensation that can achieve any fractional denominator from 1 to (2^{32} – 1). The integer portion of N is the whole part of the N divider value, while the fractional portion (N_{frac} = NUM / DEN) is the remaining fraction. In general, the total N divider value is determined by N + NUM / DEN. The N, NUM and DEN are software-programmable. The higher the denominator, the finer the resolution step of the output. For example, even when using f_{PD} = 200 MHz, the output can increment in steps of 200 MHz / (2^{32} – 1) = 0.047 Hz. 方程式 2 shows the relationship between the phase detector and VCO frequencies. Note that in SYNC mode, there is an extra divider that is not shown in 方程式 2.

$$f_{VCO} = f_{PD} \times [N + NUM/DEN] \quad (2)$$

The sigma-delta modulator that controls this fractional division is also programmable from integer mode to the third order. To make the fractional spurs consistent, the modulator is reset any time that the R0 register is programmed.

The N divider has minimum value restrictions based on the modulator order (MASH_ORDER) and VCO frequency. Furthermore, the PFD_DLY_SEL bit must be programmed in accordance to 表 7-2. IncludedDivide may be larger than one in SYNC mode. In all other modes, IncludedDivide is just one.

表 7-2. Minimum N Divider Restrictions

MASH_ORDER	f_{VCO} / IncludedDivide (MHz)	MINIMUM N	PFD_DLY_SEL
0	≤ 12500	29	1
	> 12500	33	2
1	≤ 10000	30	1
	10000 - 12500	34	2
	> 12500	38	3
2	≤ 4000 (SYNC mode)	31	1
	4000 - 7500 (SYNC mode)	31	2
	7500 - 10000	32	2
	> 10000	36	3
3	≤ 4000 (SYNC mode)	33	1
	4000 - 7500 (SYNC mode)	37	2
	7500 - 10000	41	3
	> 10000	45	4

7.3.6 MUXOUT Pin

The MUXOUT pin can be configured as either a lock detect indicator for the PLL or as a serial data output for the SPI interface to read back registers. Field MUXOUT_LD_SEL (register R0[2]) configures this output.

表 7-3. MUXOUT Pin Configurations

MUXOUT_LD_SEL	FUNCTION
0	Serial data output for readback
1	Lock detect indicator

When the lock detect indicator is selected, there are two types of indicators that can be selected with the field LD_TYPE (register R59[0]). The first indicator is called “VCOCal” (LD_TYPE = 0), and the second indicator is called “Vtune and VCOCal” (LD_TYPE = 1).

7.3.6.1 Serial Data Output for Readback

In this mode, the MUXOUT pin can be used as a the serial data output of the SPI interface. This output cannot be in a tri-state condition, therefore no line sharing is possible. Details of this pin operation are described in *Timing Requirements*. Readback is very useful when a device is used in full-assist mode, because the VCO calibration data are retrieved and saved for future use. It can also be used to read back the lock detect status using the field rb_LD_VTUNE(register R110[10:9]).

7.3.6.2 Lock Detect Indicator Set as Type “VCOCal”

In this mode, the MUXOUT pin will be low when the VCO is calibrating or when the lock detect delay timer is running. Otherwise, the MUXOUT will be high. The programmable timer (LD_DLY, register R60[15:0]) adds an additional delay after the VCO calibration finishes and before the lock detect indicator is asserted high. LD_DLY is a 16-bit unsigned quantity that corresponds to the 4 times the number of phase detector cycles in absolute delay. For example, a phase detector frequency of 100 MHz and the LD_DLY = 10000 will add a delay of 400 µs before the indicator is asserted. This indicator will remain in its current state (high or low) until register R0 is programmed with FCAL_EN = 1 with a valid input reference. In other words, if the PLL goes out of lock or the input reference goes away when the current state is high, then the current state will remain high.

7.3.6.3 Lock Detect Indicator Set as Type “Vtune and VCOCal”

In this mode the MUXOUT pin will be high when the VCO calibration has finished, the lock detect delay timer is finished running, and the PLL is locked. This indicator may remain in its current state (high or low) if the OSCin signal is lost. The true status of the indicator will be updated and resume its operation only when a valid input reference to the OSCin pin is returned. An alternative method to monitor the OSCin of the PLL is recommended. This indicator is reliable as long as the reference to OSCin is present.

The output of the device can be automatically muted when lock detect indicator “Vtune and VCOCal” is low. This feature is enabled with the field OUT_MUTE (register R0[9]) asserted.

7.3.7 VCO (Voltage-Controlled Oscillator)

The LMX2694-SEP includes a fully integrated VCO. The VCO takes the voltage from the loop filter and converts this into a frequency. The VCO frequency is related to the other frequencies and as follows:

$$f_{VCO} = f_{PD} \times \text{N divider} \times \text{IncludedDivide} \quad (3)$$

7.3.7.1 VCO Calibration

To reduce the VCO tuning gain, and therefore improve the VCO phase-noise performance, the VCO frequency range is divided into several different frequency bands. The entire range (7550 to 15100 MHz) covers an octave that allows the divider to take care of frequencies below the lower bound. This creates the need for frequency calibration to determine the correct frequency band given a desired output frequency. The frequency calibration routine is activated any time that the R0 register is programmed with the FCAL_EN = 1. It is important that a valid OSCIN signal must present before VCO calibration begins.

The VCO also has an internal amplitude calibration algorithm to optimize the phase noise, which is also activated any time the R0 register is programmed.

The optimum internal settings for this are temperature-dependent. If the temperature is allowed to drift too much without being recalibrated, some minor phase noise degradation could result. The maximum allowable drift for

Copyright © 2022 Texas Instruments Incorporated

continuous lock, ΔT_{CL}, is stated in the electrical specifications. For this device, a number of 125°C means the device never loses lock if the device is operated under recommended operating conditions.

The LMX2694-SEP allows the user to assist the VCO calibration. In general, there are three kinds of assistance, as shown in 表 7-4.

表 7-4. Assisting the VCO Calibration Speed

ASSISTANCE LEVEL	DESCRIPTION	VCO_SEL	VCO_SEL_FORCE VCO_CAPCTRL_FORCE VCO_DACISET_FORCE	VCO_CAPCTRL VCO_DACISET
No assist	User does nothing to improve VCO calibration speed.	7	0	Don't care
Partial assist	Upon every frequency change, before the FCAL_EN bit is checked, the user provides the initial starting VCO_SEL.	Choose by table	0	Don't care
Full assist	The user forces the VCO core (VCO_SEL), amplitude settings (VCO_DACISET), and frequency band (VCO_CAPCTRL) and manually sets the value.	Choose by readback	1	Choose by readback

For the no-assist method, just set VCO_SEL = 7 and this is done. For partial-assist, the VCO calibration speed can be improved by changing the VCO_SEL bit according to frequency. Note that the frequency is not the actual VCO core range, but actually favors choosing the VCO. This is not only optimal for VCO calibration speed, but required for reliable locking.

表 7-5. Minimum VCO_SEL for Partial Assist

f_{VCO}	VCO CORE (MIN)
7550 - 8740 MHz	VCO1
8740 - 10000 MHz	VCO2
10000 - 10980 MHz	VCO3
10980 - 12100 MHz	VCO4
12100 - 13080 MHz	VCO5
13080 - 14180 MHz	VCO6
14180 - 15100 MHz	VCO7

For fastest calibration time, it is ideal to use the minimum VCO core as recommended in 表 7-5. The 表 7-6 shows typical VCO calibration times (in µs) for this choice in bold as well as showing how long the calibration time is increased if a higher than necessary VCO core is chosen. Realize that these calibration times are specific to these f_{OSC} and f_{PD} conditions specified and at the boundary of two cores, sometimes the calibration time can be increased.

表 7-6. Typical Calibration Times for f_{OSC} = f_{PD} = 100 MHz Based on VCO_SEL

f_{VCO} (GHz)	VCO_SEL						
	VCO7	VCO6	VCO5	VCO4	VCO3	VCO2	VCO1
8.1	650	540	550	440	360	230	110
9.3	610	530	540	430	320	**220**	Invalid
10.4	590	520	530	430	**240**	Invalid	
11.4	340	290	280	**180**	Invalid		
12.5	270	170	**120**	Invalid			
13.6	240	**130**	Invalid				
14.7	**160**	Invalid					

7.3.7.2 Determining the VCO Gain

The VCO gain varies between the seven cores, and is the lowest at the lowest end of the band and highest at the highest end of each band. For a more accurate estimation, use 表 7-7.

表 7-7. VCO Gain

f1	f2	$K_{VCO}1$	$K_{VCO}2$
7550	8740	78	114
8740	10000	91	125
10000	10980	112	136
10980	12100	136	168
12100	13080	171	206
13080	14180	188	218
14180	15100	218	248

Based ion 表 7-7, 方程式 4 can estimate the VCO gain for an arbitrary VCO frequency of f_{VCO}:

$$K_{VCO} = K_{VCO}1 + (K_{VCO}2 - K_{VCO}1) \times (f_{VCO} - f1) / (f2 - f1) \quad (4)$$

7.3.8 Channel Divider

To go below the VCO lower bound of 7550 MHz, the channel divider can be used. The channel divider consists of four segments, and the total division value is equal to the multiplication of them. Therefore, not all values are valid.

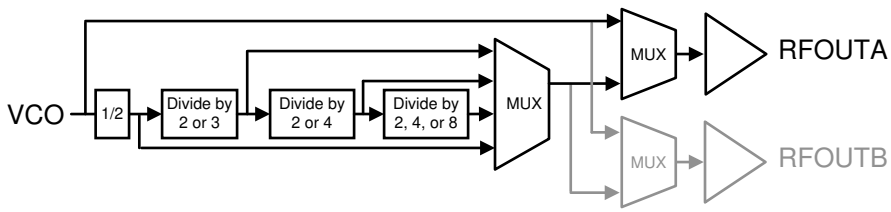

图 7-2. Channel Divider

When the channel divider is used, there are limitations on the values. 表 7-8 shows how these values are implemented and which segments are used.

表 7-8. Channel Divider Segments

EQUIVALENT DIVISION VALUE	FREQUENCY LIMITATION	OUTPUT FREQUENCY (MHz)		CHDIV[4:0]	SEG0	SEG1	SEG2	SEG3
		MIN	MAX					
2	None	3775	7550	0	2	1	1	1
4		1887.5	3775	1	2	2	1	1
6		1258.333	2516.667	2	2	3	1	1
8	$f_{VCO} \leq 11.5$ GHz	943.75	1437.5	3	2	2	2	1
12		629.167	958.333	4	2	3	2	1
16		471.875	718.75	5	2	2	4	1
24		314.583	469.167	6	2	3	4	1
32		235.938	359.375	7	2	2	8	1
48		157.292	239.583	8	2	3	8	1
64		117.969	179.688	9	2	2	8	2
96		78.646	119.792	10	2	3	8	2
128		58.984	89.844	11	2	2	8	4
192		39.323	59.896	12	2	3	8	4
Invalid	n/a	n/a	n/a	13 - 31	n/a	n/a	n/a	n/a

The channel divider is powered up whenever an output (OUTx_MUX) is selected to the channel divider or SYSREF, regardless of whether it is powered down or not. When an output is not used, TI recommends selecting the VCO output to ensure that the channel divider is not unnecessarily powered up.

Copyright © 2022 Texas Instruments Incorporated

表 7-9. Channel Divider

OUTA MUX	OUTB MUX	CHANNEL DIVIDER
Channel Divider	X	Powered up
X	Channel Divider or SYSREF	Powered up
All other cases		Powered down

7.3.9 Output Buffer

The RF output buffer type is open-collector that requires an external pullup to V_{CC}. This component may be a 50-Ω resistor or an inductor. The inductor has less controlled impedance, but higher power. For the inductor case, it is often helpful to follow this with a resistive pad. The output power can be programmed to various levels or disabled while still keeping the PLL in lock.

表 7-10. OUTx_PWR Recommendations

f_{OUT}	RESTRICTIONS	COMMENTS
10 MHz ≤ f_{OUT} ≤ 5 GHz	None	At lower frequencies, the output buffer impedance is high, so the 50-Ω pullup will make the output impedance look somewhat like 50 Ω.
5 GHz ≤ f_{OUT} ≤ 10 GHz	OUTx_PWR ≤ 31	In this range, parasitic inductances have some impact, so the output setting is restricted.
10 GHz < f_{OUT}	OUTx_PWR ≤ 20	At these higher frequency ranges, it is best to keep below 20 for highest power and optimal noise floor.

7.3.10 Powerdown Modes

The LMX2694-SEP can be powered up and down using the CE pin or the POWERDOWN bit. When the device comes out of the powered-down state, either by resuming the POWERDOWN bit to zero or by pulling back CE pin HIGH (if it was powered down by CE pin), register R0 must be programmed with FCAL_EN high again to recalibrate the device.

7.3.11 Treatment of Unused Pins

This device has several pins for many features and there is a preferred way to treat these pins if not needed. For the input pins, a series resistor is recommend, but they can be directly shorted.

表 7-11. Recommended Treatment of Pins

PINS	RECOMMENDED TREATMENT IF NOT USED
CE	V_{CC} with 1 kΩ.
SYNC, SYSREFREQ	Ground with 1 kΩ.
OSCIN_P, OSCIN_N	Ground with 50 Ω after AC-coupling capacitors. If one of the complimentary sides is used and other side is not, impedance looking out should be similar for both of these pins.
SCK, SDI	Ground with 1 kΩ.
CS#	V_{CC} with 1 kΩ.
RFOUTx	V_{CC} with 50 Ω. If one of the complimentary sides is used and the other side is not, impedance looking out should be similar for both of these pins.
MUXOUT	Ground with 10 kΩ.

7.3.12 Phase Synchronization

7.3.12.1 General Concept

The SYNC pin allows the user to synchronize the LMX2694-SEP such that the delay from the rising edge of the OSCIN signal to the output signal is deterministic. Initially, the devices are locked to the input, but are not synchronized. The user sends a synchronization pulse that is reclocked to the next rising edge of the OSCIN pulse. After a given time, t_1, the phase relationship from OSCIN to f_{OUT} will be deterministic. This time is dominated by the sum of the VCO calibration time, the analog setting time of the PLL loop, and the MASH_RST_CNT if used in fractional mode.

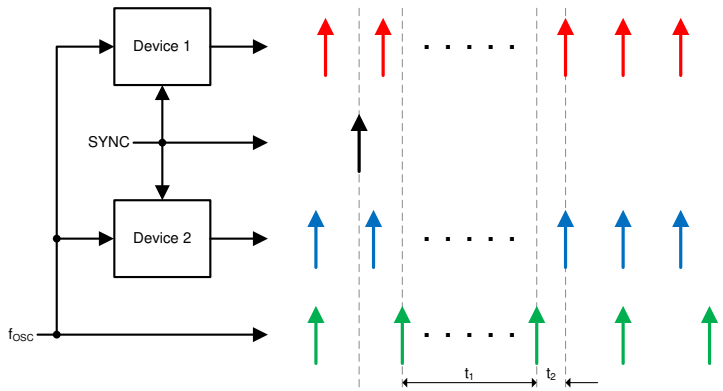

图 7-3. Phase SYNC Mechanism

When the SYNC feature is enabled, part of the channel divide may be included in the feedback path.

表 7-12. IncludedDivide With VCO_PHASE_SYNC = 1

OUTx_MUX	CHANNEL DIVIDER	IncludedDivide
OUTA_MUX = OUTB_MUX = 1 ("VCO")	Don't care	1
All other valid conditions	Divisible by 3 but NOT 24 or 192	SEG0 x SEG1 = 6
	All other values	SEG0 x SEG1 = 4

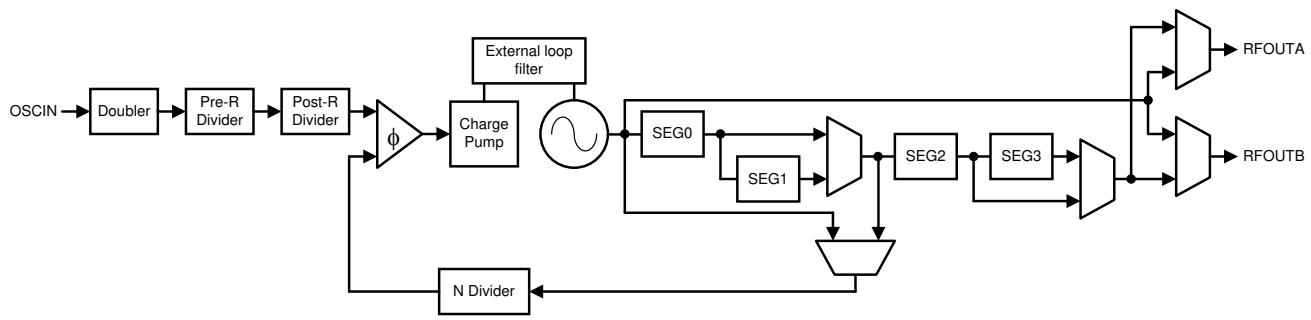

图 7-4. Phase SYNC Diagram

7.3.12.2 Categories of Applications for SYNC

The requirements for SYNC depend on certain setup conditions. In cases that the SYNC is not timing critical, it can be done through software by toggling the VCO_PHASE_SYNC bit from 0 to 1. 图 7-5 gives the different categories. When it is timing critical, then it must be done through the pin and the setup and hold times for the OSCIN pin are critical. For timing critical SYNC (Category 3 only), adhere to the following guidelines.

表 7-13. SYNC Pin Timing Characteristics for Category 3 SYNC

PARAMETER		MIN	MAX	UNIT
f_{OSC}	Input reference frequency		40	MHz
t_{SETUP}	Setup time between SYNC and OSCIN rising edges	9		ns
t_{HOLD}	Hold time between SYNC and OSCIN rising edges	4		ns

Copyright © 2022 Texas Instruments Incorporated

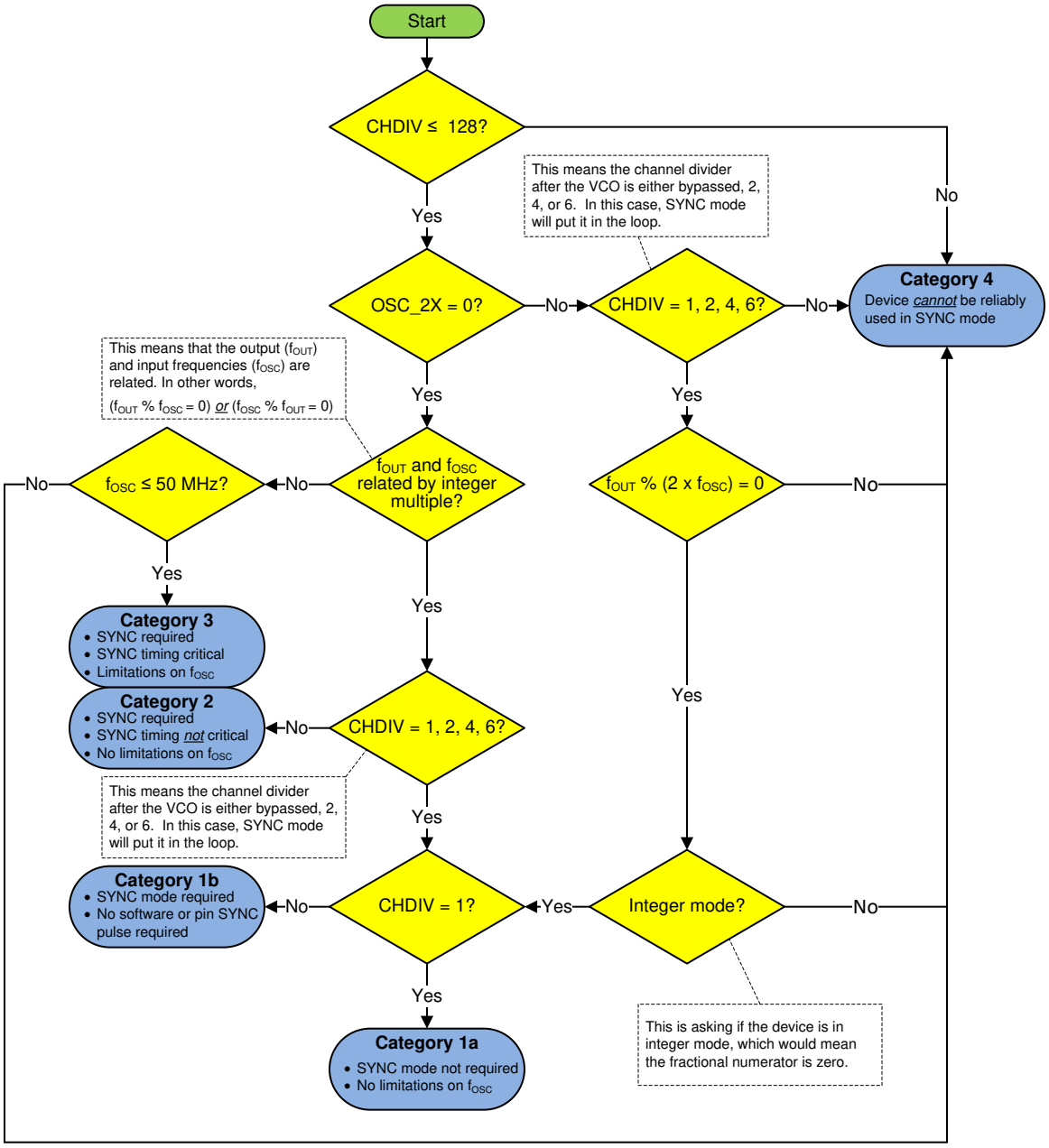

图 7-5. Determining the SYNC Category

7.3.12.3 Procedure for Using SYNC

This procedure must be used to put the device in SYNC mode.

1. Use the flowchart to determine the SYNC category.
2. Make determinations for OSCIN and using SYNC based on the category.
   a. If category 4, SYNC cannot be performed in this setup.
   b. If category 3, ensure that the maximum f_{OSC} frequency for SYNC is not violated and there are hardware accommodations to use the SYNC pin.
3. If the channel divide is used, determine the included channel divide value which will be 2 × SEG1 of the channel divide.
   a. If OUTA_MUX is not channel divider and OUTB_MUX is not channel divider or SYSREF, then IncludedDivide = 1.

   b. Otherwise, IncludedDivide = 2 × SEG1. In the case that the channel divider is 2, then IncludedDivide = 4.
4. If not done already, divide the N divider and fractional values by the included channel divide to account for the included channel divide.
5. Program the device with the VCO_PHASE_SYNC = 1. Note that this does not count as applying a SYNC to device (for category 2).
6. Apply the SYNC, if required.
   a. If category 2, VCO_PHASE_SYNC can be toggled from 0 to 1. Alternatively, a rising edge can be sent to the SYNC pin and the timing of this is not critical.
   b. If category 3, the SYNC pin must be used, and the timing must be away from the rising edge of the OSCIN signal.

7.3.12.4 SYNC Input Pin

If not using SYNC mode (VCO_PHASE_SYNC = 0), the INPIN_IGNORE bit must be set to one, otherwise it causes issues with lock detect. If the pin is desired for to be used and VCO_PHASE_SYNC = 1, then set INPIN_IGNORE = 0.

7.3.13 Phase Adjust

The MASH_SEED word can use the sigma-delta modulator to shift output signal phase with respect to the input reference. If a SYNC pulse is sent (software or pin) or the MASH is reset with MASH_RST_N, then this phase shift is from the initial phase of zero. If the MASH_SEED word is written to, then this phase is added. The phase shift is calculated as below.

$$\text{Phase shift in degrees} = 360 \times (\text{MASH_SEED} / \text{PLL_DEN}) \times (\text{IncludedDivide} / \text{CHDIV}) \quad (5)$$

For example:

MASH_SEED = 1; PLL_DEN = 12; CHDIV = 16

If VCO_PHASE_SYNC = 0, Phase shift = 360 × (1 / 12) × (1 / 16) = 1.875 degrees.

If VCO_PHASE_SYNC = 1, Phase shift = 360 × (1 / 12) × (4 / 16) = 7.5 degrees.

There are several considerations when using MASH_SEED.

- Phase shift can be done with a PLL_NUM = 0, but MASH_ORDER must be greater than zero. For MASH_ORDER = 1, the phase shifting only occurs when MASH_SEED is a multiple of PLL_DEN.
- For the 2nd order modulator, PLL_N ≥ 45. For the 3rd order modulator, PLL_N ≥ 49.

When using MASH_SEED in the case where IncludedDivide > 1, there are several additional considerations in order to get the phase shift to be monotonically increasing with MASH_SEED.

- TI recommends to use MASH_ORDER ≤ 2.
- When using the 2nd order modulator for VCO frequencies below 10 GHz (when IncludedDivide = 6) or 9 GHz (when IncludedDivide = 4), it may be necessary to increase the PLL_N value much higher or change to the 1st order modulator. When this is necessary depends on the VCO frequency, IncludedDivide, and PLL_N value.

7.3.14 Fine Adjustments for Phase Adjust and Phase SYNC

Phase SYNC refers to the process of getting the same phase relationship for every power up cycle and each time assuming that a given programming procedure is followed. However, there are some adjustments that can be made to get the most accurate results. As for the consistency of the phase SYNC, the only source of variation could be if the VCO calibration chooses a different VCO core and capacitor, which can introduce a bimodal distribution with about 10 ps of variation. If this 10 ps is not desirable, then it can be eliminated by reading back the VCO core, capcode, and DACISET values and forcing these values to ensure the same calibration settings every time. The delay through the device varies from part to part and can be on the order of 60 ps. This part to part variation can be calibrated out with the MASH_SEED. The variation in delay through the device also changes on the order of +2.5 ps/°C, but devices on the same board likely have similar temperatures, so this will somewhat track. In summary, the device can be made to have consistent delay through the part and there are

Copyright © 2022 Texas Instruments Incorporated

means to adjust out any remaining errors with the MASH_SEED. This tends only to be an issue at higher output frequencies when the period is shorter.

7.3.15 SYSREF

The LMX2694-SEP can generate a SYSREF output signal that is synchronized to f_{OUT} with a programmable delay. This output can be a single pulse, series of pulses, or a continuous stream of pulses. To use the SYSREF capability, the PLL must first be placed in SYNC mode with VCO_PHASE_SYNC = 1.

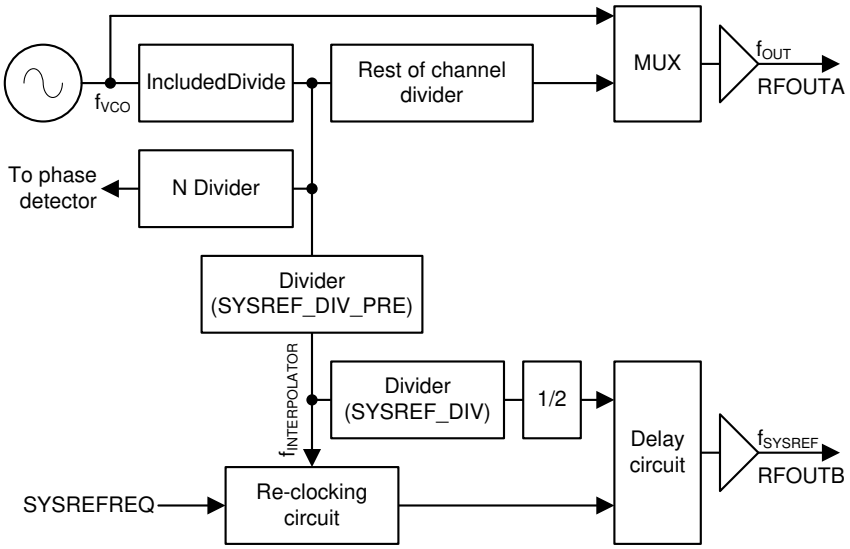

图 7-6. SYSREF Setup

As 图 7-6 shows, the SYSREF feature uses IncludedDivide and SYSREF_DIV_PRE divider to generate $f_{INTERPOLATOR}$. This frequency is used for re-clocking of the rising and falling edges at the SYSREFREQ pin. In master mode, the $f_{INTERPOLATOR}$ is further divided by 2 × SYSREF_DIV to generate finite series or continuous stream of pulses.

表 7-14. SYSREF Setup

PARAMETER	MIN	TYP	MAX	UNIT
f_{VCO}	7550		15100	MHz
$f_{INTERPOLATOR}$	0.8		1.5	GHz
IncludedDivide		4 or 6		
SYSREF_DIV_PRE	1, 2, or 4			
SYSREF_DIV	4, 6, 8, ..., 4098			
$f_{INTERPOLATOR}$	$f_{INTERPOLATOR} = f_{VCO}$ / (IncludedDivide × SYSREF_DIV_PRE)			
f_{SYSREF}	$f_{SYSREF} = f_{INTERPOLATOR}$ / (2 × SYSREF_DIV)			
Delay step size		9		ps
Pulses for pulsed mode (SYSREF_PULSE_CNT)	0		15	

The delay can be programmed using the JESD_DAC1_CTRL, JESD_DAC2_CTRL, JESD_DAC3_CTRL, and JESD_DAC4_CTRL words. By concatenating these words into a larger word called "SYSREFPHASESHIFT", the relative delay can be found. The sum of these words must always be 63.

表 7-15. SYSREF Delay

SYSREFPHASESHIFT	DELAY	JESD_DAC1	JESD_DAC2	JESD_DAC3	JESD_DAC4
0	Minimum	36	27	0	0
...				0	0

表 7-15. SYSREF Delay (continued)

SYSREFPHASESHIFT	DELAY	JESD_DAC1	JESD_DAC2	JESD_DAC3	JESD_DAC4
36		0	63	0	0
37		0	62	1	0
...					
99		0	0	63	0
100		0	0	62	1
...					
161		0	0	1	62
162		0	0	0	63
163		1	0	0	62
225		63	0	0	0
226		62	1	0	0
247	Maximum	41	22	0	0
> 247	Invalid	Invalid	Invalid	Invalid	Invalid

7.3.15.1 Programmable Fields

表 7-16 has the programmable fields for the SYSREF functionality.

表 7-16. SYSREF Programming Fields

FIELD	PROGRAMMING	DEFAULT	DESCRIPTION
SYSREF_EN	0 = Disabled 1 = Enabled	0	Enables the SYSREF mode. SYSREF_EN must be 1 if and only if OUTB_MUX = 2 (SYSREF).
SYSREF_DIV_PRE	1 = DIV1 2 = DIV2 4 = DIV4 Other states = Invalid		The output of this divider is the $f_{INTERPOLATOR}$.
SYSREF_REPEAT	0 = Master mode 1 = Repeater mode	0	In master mode, the device creates a series of SYSREF pulses. In repeater mode, SYSREF pulses are generated with the SYSREFREQ pin.
SYSREF_PULSE	0 = Continuous mode 1 = Pulsed mode	0	Continuous mode continuously makes SYSREF pulses, where pulsed mode makes a series of SYSREF_PULSE_CNT pulses
SYSREF_PULSE_CNT	0 to 15	4	In the case of using pulsed mode, this is the number of pulses. Setting this to zero is an allowable, but not practical state.
SYSREF_DIV	0 = Divide by 4 1 = Divide by 6 2 = Divide by 8 ... 2047 = Divide by 4098	0	The SYSREF frequency is at the VCO frequency divided by this value.

7.3.15.2 Input and Output Pin Formats

7.3.15.2.1 SYSREF Output Format

The SYSREF output comes in differential format through RFOUTB. This will have a minimum voltage of about 2.3 V and a maximum of 3.3 V. If DC coupling cannot be used, there are two strategies for AC coupling.

Copyright © 2022 Texas Instruments Incorporated

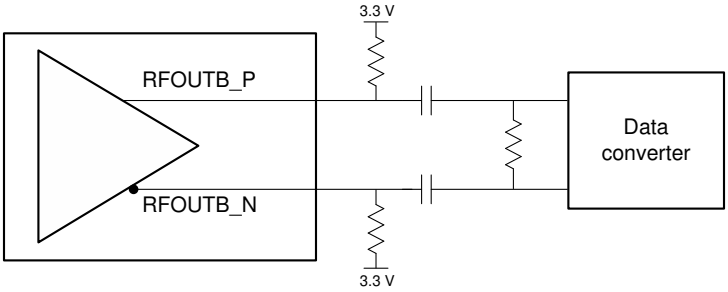

图 7-7. SYSREF Output

1. Send a series of pulses to establish a DC-bias level across the AC-coupling capacitor.
2. Establish a bias voltage at the data converter that is below the threshold voltage by using a resistive divider.

7.3.15.3 SYSREF Examples

The SYSREF can be used in a repeater mode, which just echos the input, after the SYSREF is reclocked to the $f_{INTERPOLATOR}$ frequency and then RFOUT—or it can be used in a repeater. In repeater mode, it can repeat 1, 2, 4, 8, or infinite (continuous) pulses. The frequency for repeater mode is equal to the RFOUT frequency divided by the SYSREF divider.

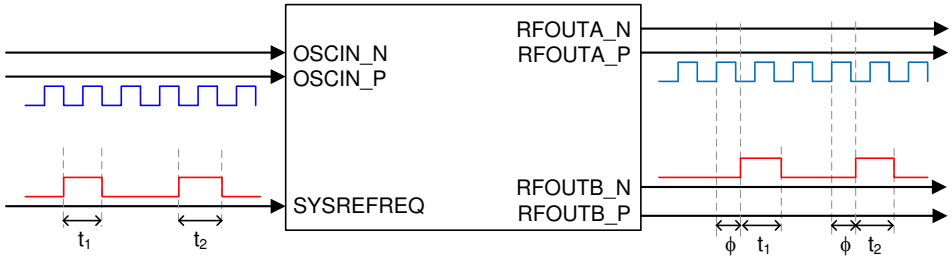

图 7-8. SYSREF Out in Repeater Mode

In master mode, the SYSREFREQ pin is pulled high to allow the SYSREF output.

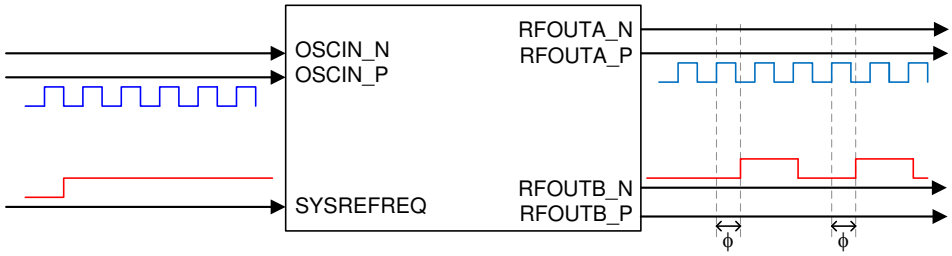

图 7-9. SYSREF Out in Pulsed / Continuous Mode

7.3.15.4 SYSREF Procedure

To use SYSREF, do the these steps:

1. Put the device in SYNC mode using the procedure already outlined.
2. Figure out IncludedDivide the same way it is done for SYNC mode.
3. Calculate the SYSREF_DIV_PRE value such that the interpolator frequency ($f_{INTERPOLATOR}$) is in the range of 800 to 1500 MHz. $f_{INTERPOLATOR} = f_{VCO}$ / IncludedDivide / SYSREF_DIV_PRE. Make this frequency a multiple of f_{OSC} if possible.
4. If using master mode (SYSREF_REPEAT = 0), ensure SYSREFREQ pin is high.
5. If using repeater mode (SYSREF_REPEAT = 1), set up the pulse count if desired. Pulses are created by toggling the SYSREFREQ pin.
6. Adjust the delay between the RFOUTA and RFOUTB signal using the JESD_DACx_CTRL fields.

Copyright © 2022 Texas Instruments Incorporated

7.4 Device Functional Modes

表 7-17 shows the function modes of the LMX2694-SEP.

表 7-17. Functional Modes

MODE	DESCRIPTION	SOFTWARE SETTINGS
RESET	Registers are held in their reset state. This device does have a power-on reset, but it is good practice to also do a software reset if there is any possibility of noise on the programming lines, especially if there is sharing with other devices. Also realize that there are registers not disclosed in the data sheet that are reset as well.	RESET = 1 POWERDOWN = 0
POWERDOWN	Device is powered down.	POWERDOWN = 1
Normal operating mode	This is used with at least one output on as a frequency synthesizer and the device can be controlled through the SPI interface.	
SYNC mode	This is used where part of the channel divider is in the feedback path to ensure deterministic phase.	VCO_PHASE_SYNC = 1
SYSREF mode	In this mode, RFOUTB is used to generate pulses for SYSREF.	VCO_PHASE_SYNC =1 SYSREF_EN = 1

7.5 Programming

The LMX2694-SEP is programmed using 24-bit shift registers. The shift register consists of a R/W bit (MSB), followed by a 7-bit address field and a 16-bit data field. For the R/W bit, 0 is for write, and 1 is for read. The address field ADDRESS[6:0] is used to decode the internal register address. The remaining 16 bits form the data field DATA[15:0]. While CS# is low, serial data is clocked into the shift register upon the rising edge of clock (data is programmed MSB first). When CS# goes high, data is transferred from the data field into the selected register bank. See 图 6-2 for timing details.

7.5.1 Recommended Initial Power-Up Sequence

For the most reliable programming, TI recommends this procedure:

1. Apply power to device.
2. Program RESET = 1 to reset registers.
3. Program RESET = 0 to remove reset.
4. Program registers as shown in the register map in REVERSE order from highest to lowest.
5. Programming of registers R113 down to R79 is not required, but if they are programmed, they should be done so as the register map shows. Programming of registers R79 down to R0 is required. Registers in this range that only 1's and 0's should also be programmed in accordance to the register map. Do NOT assume that the power-on reset state and the recommended value are the same.
6. Wait 10 ms.
7. Program register R0 one additional time with FCAL_EN = 1 to ensure that the VCO calibration runs from a stable state.

7.5.2 Recommended Sequence for Changing Frequencies

The recommended sequence for changing frequencies is as follows:

1. Change the N-divider value.
2. Program the PLL numerator and denominator.
3. Program FCAL_EN (R0[3]) = 1.

Copyright © 2022 Texas Instruments Incorporated

7.6 Register Maps

REG.	DATA[15:0]																POR
	15	14	13	12	11	10	9	8	7	6	5	4	3	2	1	0	
R0	0	VCO_PHASE_SYNC	1	0	0	0	OUT_MUTE	FCAL_HPFD_ADJ		0	0	1	FCAL_EN	MUXOUT_LD_SEL	RESET	POWER DOWN	0x200C
R1	0	0	0	0	1	0	0	0	0	0	0	0	MUXOUT_CTRL	CAL_CLK_DIV			0x80C
R2	0	0	0	0	0	1	0	1	0	0	0	0	0	0	0	0	0x500
R3	0	0	0	0	0	1	1	0	0	1	0	0	0	0	1	0	0x642
R4	0	0	0	0	1	1	1	0	0	1	0	0	0	0	1	1	0xA43
R5	0	0	0	0	0	0	1	1	1	1	1	0	1	0	0	0	0xC8
R6	0	1	1	1	1	0	0	0	0	0	0	0	0	0	1	0	0xC802
R7	0	0	0	0	0	0	0	0	1	0	1	1	0	0	1	0	0xB2
R8	0	VCO_DACISET_FORCE	1	0	VCO_CAPCTRL_FORCE	0	0	0	0	0	0	0	0	0	0	0	0x2000
R9	0	0	0	OSC_2X	0	1	1	0	0	0	0	0	0	1	0	0	0x604
R10	0	0	0	1	0	0	0	0	1	1	0	1	1	0	0	0	0x10F8
R11	0	0	0	0	PLL_R								1	0	0	0	0x18
R12	0	1	0	1	0	0	0	0	PLL_R_PRE								0x5001
R13	0	1	0	0	0	0	0	0	0	0	0	0	0	0	0	0	0x4000
R14	0	0	0	1	1	1	1	0	0	CPG			0	0	0	0	0x1E70
R15	0	0	0	0	0	1	1	0	0	1	0	0	1	1	1	1	0x64F
R16	0	0	0	0	0	0	0	VCO_DACISET									0x80
R17	0	0	0	0	0	0	0	1	0	0	1	0	1	1	0	0	0x96
R18	0	0	0	0	0	0	0	0	0	1	1	0	0	1	0	0	0x64
R19	0	0	1	0	0	1	1	1	VCO_CAPCTRL								0x27B7
R20	1	1	VCO_SEL			VCO_SEL_FORCE	0	0	0	1	0	0	1	0	0	0	0x3048
R21	0	0	0	0	0	1	0	0	0	0	0	0	0	0	0	1	0x401

Copyright © 2022 Texas Instruments Incorporated

REG.	DATA[15:0]																POR
	15	14	13	12	11	10	9	8	7	6	5	4	3	2	1	0	
R22	0	0	0	0	0	0	0	0	0	0	0	0	0	0	0	1	0x1
R23	0	0	0	0	0	0	0	0	0	1	1	1	1	1	0	0	0x7C
R24	0	0	0	0	0	1	1	1	0	0	0	1	1	0	1	0	0x71A
R25	0	0	0	0	0	1	1	0	0	0	1	0	0	1	0	0	0x624
R26	0	0	0	0	1	1	0	1	1	0	1	1	0	0	0	0	0xDB0
R27	0	0	0	0	0	0	0	0	0	0	0	0	0	0	1	0	0x2
R28	0	0	0	0	0	1	0	0	1	0	0	0	1	0	0	0	0x488
R29	0	0	1	1	0	0	0	1	1	0	0	0	1	1	0	0	0x318C
R30	0	0	1	1	0	0	0	1	1	0	0	0	1	1	0	0	0x318C
R31	0	SEG1_EN	0	0	0	0	1	1	1	1	1	0	1	1	0	0	0xC3EC
R32	0	0	0	0	0	0	1	1	1	0	0	1	0	0	1	1	0x393
R33	0	0	0	1	1	1	1	0	0	0	1	0	0	0	0	1	0x1E21
R34	0	0	0	0	0	0	0	0	0	0	0	0	0	PLL_N[18:16]			0x10
R35	0	0	0	0	0	0	0	0	0	0	0	0	0	1	0	0	0x4
R36	PLL_N[15:0]																0x70
R37	1	0	PFD_DLY_SEL						0	0	0	0	0	1	0	0	0x205
R38	PLL_DEN[31:16]																0xFFFF
R39	PLL_DEN[15:0]																0xFFFF
R40	MASH_SEED[31:16]																0x0
R41	MASH_SEED[15:0]																0x0
R42	PLL_NUM[31:16]																0x0
R43	PLL_NUM[15:0]																0x0
R44	0	0	OUTA_PWR						OUTB_PD	OUTA_PD	MASH_RESET_N	0	0	MASH_ORDER			0x22A2
R45	1	1	0	OUTA_MUX		0	0	0	1	1	OUTB_PWR						0xC622
R46	0	0	0	0	0	1	1	1	1	1	1	1	1	1	OUTB_MUX		0x7F0
R47	0	0	0	0	0	0	1	1	0	0	0	0	0	0	0	0	0x300

Copyright © 2022 Texas Instruments Incorporated

REG.	DATA[15:0]																POR
	15	14	13	12	11	10	9	8	7	6	5	4	3	2	1	0	
R48	0	0	0	0	0	0	1	1	0	0	0	0	0	0	0	0	0x3E0
R49	0	1	0	0	0	0	0	1	1	0	0	0	0	0	0	0	0x4180
R50	0	0	0	0	0	0	0	0	0	0	0	0	0	0	0	0	0x80
R51	0	0	0	0	0	0	0	0	1	0	0	0	0	0	0	0	0x80
R52	0	0	0	0	0	1	0	0	0	0	1	0	0	0	0	0	0x420
R53	0	0	0	0	0	0	0	0	0	0	0	0	0	0	0	0	0x0
R54	0	0	0	0	0	0	0	0	0	0	0	0	0	0	0	0	0x0
R55	0	0	0	0	0	0	0	0	0	0	0	0	0	0	0	0	0x0
R56	0	0	0	0	0	0	0	0	0	0	0	0	0	0	0	0	0x0
R57	0	0	0	0	0	0	0	0	0	0	1	0	0	0	0	0	0x0
R58	INPIN_ IGNORE	0	0	0	0	0	0	0	0	0	0	0	0	0	0	1	0x8001
R59	0	0	0	0	0	0	0	0	0	0	0	0	0	0	0	LD_TYPE	0x1
R60	LD_DLY																0x3E8
R61	0	0	0	0	0	0	0	0	1	0	1	0	1	0	0	0	0xA8
R62	0	0	0	0	0	0	1	1	0	0	1	0	0	0	1	0	0xAE
R63	0	0	0	0	0	0	0	0	0	0	0	0	0	0	0	0	0x0
R64	0	0	0	1	0	0	1	1	1	0	0	0	1	0	0	0	0x1388
R65	0	0	0	0	0	0	0	0	0	0	0	0	0	0	0	0	0x0
R66	0	0	0	0	0	0	0	1	1	1	1	1	0	1	0	0	0x140
R67	0	0	0	0	0	0	0	0	0	0	0	0	0	0	0	0	0x0
R68	0	0	0	0	0	0	1	1	1	1	1	0	1	0	0	0	0x3E8
R69	MASH_RST_COUNT[31:16]																0x0
R70	MASH_RST_COUNT[15:0]																0xC350
R71	0	0	0	0	0	0	0	0	SYSREF_DIV_PRE			SYSREF_ PULSE	SYSREF_ EN	SYSREF_ REPEAT	0	0	0x80
R72	0	0	0	0	0	SYSREF_DIV											0x1
R73	0	0	0	0	JESD_DAC2_CTRL						JESD_DAC1_CTRL						0x3F

REG.	DATA[15:0]																POR
	15	14	13	12	11	10	9	8	7	6	5	4	3	2	1	0	
R74	SYSREF_PULSE_CNT				JESD_DAC4_CTRL						JESD_DAC3_CTRL						0x0
R75	0	0	0	0	1	CHDIV					0	0	0	0	0	0	0x800
R76	0	0	0	0	0	0	0	0	0	0	0	0	1	1	0	0	0xC
R77	0	0	0	0	0	0	0	0	0	0	0	0	0	0	0	0	0x0
R78	0	0	0	0	0	0	0	0	0	1	1	0	0	1	0	0	0x64
R79	0	0	0	0	0	0	0	0	0	0	0	0	0	0	0	0	0x0
R80	0	0	0	0	0	0	0	0	0	0	0	0	0	0	0	0	0x0
R81	0	0	0	0	0	0	0	0	0	0	0	0	0	0	0	0	0x0
R82	0	0	0	0	0	0	0	0	0	0	0	0	0	0	0	0	0x0
R83	0	0	0	0	0	0	0	0	0	0	0	0	0	0	0	0	0x0
R84	0	0	0	0	0	0	0	0	0	0	0	0	0	0	0	0	0x0
R85	0	0	0	0	0	0	0	0	0	0	0	0	0	0	0	0	0x0
R86	0	0	0	0	0	0	0	0	0	0	0	0	0	0	0	0	0x0
R87	0	0	0	0	0	0	0	0	0	0	0	0	0	0	0	0	0x0
R88	0	0	0	0	0	0	0	0	0	0	0	0	0	0	0	0	0x0
R89	0	0	0	0	0	0	0	0	0	0	0	0	0	0	0	0	0x0
R90	0	0	0	0	0	0	0	0	0	0	0	0	0	0	0	0	0x0
R91	0	0	0	0	0	0	0	0	0	0	0	0	0	0	0	0	0x0
R92	0	0	0	0	0	0	0	0	0	0	0	0	0	0	0	0	0x0
R93	0	0	0	0	0	0	0	0	0	0	0	0	0	0	0	0	0x0
R94	0	0	0	0	0	0	0	0	0	0	0	0	0	0	0	0	0x0
R95	0	0	0	0	0	0	0	0	0	0	0	0	0	0	0	0	0x0
R96	0	0	0	0	0	0	0	0	0	0	0	0	0	0	0	0	0x0
R97	0	0	0	0	0	0	0	0	0	0	0	0	0	0	0	0	0x0
R98	0	0	0	0	0	0	0	0	0	0	0	0	0	0	0	0	0x0
R99	0	0	0	0	0	0	0	0	0	0	0	0	0	0	0	0	0x0
R100	0	0	0	0	0	0	0	0	0	0	0	0	0	0	0	0	0x0

Copyright © 2022 Texas Instruments Incorporated

REG.	DATA[15:0]																POR
	15	14	13	12	11	10	9	8	7	6	5	4	3	2	1	0	
R101	0	0	0	0	0	0	0	0	0	0	0	0	0	0	0	0	0x0
R102	0	0	0	0	0	0	0	0	0	0	0	0	0	0	0	0	0x0
R103	0	0	0	0	0	0	0	0	0	0	0	0	0	0	0	0	0x0
R104	0	0	0	0	0	0	0	0	0	0	0	0	0	0	0	0	0x0
R105	0	0	0	0	0	0	0	0	0	0	0	0	0	0	0	0	0x440
R106	0	0	0	0	0	0	0	0	0	0	0	0	0	0	0	0	0x7
R107	0	0	0	0	0	0	0	0	0	0	0	0	0	0	0	0	0x0
R108	0	0	0	0	0	0	0	0	0	0	0	0	0	0	0	0	0x0
R109	0	0	0	0	0	0	0	0	0	0	0	0	0	0	0	0	0x0
R110	0	0	0	0	0	rb_LD_VTUNE		0	rb_VCO_SEL			0	0	0	0	0	0x0
R111	0	0	0	0	0	0	0	0	rb_VCO_CAPCTRL								0x0
R112	0	0	0	0	0	0	0	rb_VCO_DACISET									0x0
R113	0	0	0	0	0	0	0	0	0	0	0	0	0	0	0	0	0x0
R114	0	0	0	0	0	0	0	0	0	0	0	0	0	0	0	0	0x0

表 7-18. Device Registers

Offset	Acronym	Register Name	Section
0x0	R0		Go
0x1	R1		Go
0x2	R2		Go
0x3	R3		Go
0x4	R4		Go
0x5	R5		Go
0x6	R6		Go
0x7	R7		Go
0x8	R8		Go
0x9	R9		Go
0xA	R10		Go

表 7-18. Device Registers (continued)

Offset	Acronym	Register Name	Section
0xB	R11		Go
0xC	R12		Go
0xD	R13		Go
0xE	R14		Go
0xF	R15		Go
0x10	R16		Go
0x11	R17		Go
0x12	R18		Go
0x13	R19		Go
0x14	R20		Go
0x15	R21		Go
0x16	R22		Go
0x17	R23		Go
0x18	R24		Go
0x19	R25		Go
0x1A	R26		Go
0x1B	R27		Go
0x1C	R28		Go
0x1D	R29		Go
0x1E	R30		Go
0x1F	R31		Go
0x20	R32		Go
0x21	R33		Go
0x22	R34		Go
0x23	R35		Go
0x24	R36		Go
0x25	R37		Go

Copyright © 2022 Texas Instruments Incorporated

表 7-18. Device Registers (continued)

Offset	Acronym	Register Name	Section
0x26	R38		Go
0x27	R39		Go
0x28	R40		Go
0x29	R41		Go
0x2A	R42		Go
0x2B	R43		Go
0x2C	R44		Go
0x2D	R45		Go
0x2E	R46		Go
0x2F	R47		Go
0x30	R48		Go
0x31	R49		Go
0x32	R50		Go
0x33	R51		Go
0x34	R52		Go
0x35	R53		Go
0x36	R54		Go
0x37	R55		Go
0x38	R56		Go
0x39	R57		Go
0x3A	R58		Go
0x3B	R59		Go
0x3C	R60		Go
0x3D	R61		Go
0x3E	R62		Go
0x3F	R63		Go
0x40	R64		Go

Copyright © 2022 Texas Instruments Incorporated

表 7-18. Device Registers (continued)

Offset	Acronym	Register Name	Section
0x41	R65		Go
0x42	R66		Go
0x43	R67		Go
0x44	R68		Go
0x45	R69		Go
0x46	R70		Go
0x47	R71		Go
0x48	R72		Go
0x49	R73		Go
0x4A	R74		Go
0x4B	R75		Go
0x4C	R76		Go
0x4D	R77		Go
0x4E	R78		Go
0x4F	R79		Go
0x50	R80		Go
0x51	R81		Go
0x52	R82		Go
0x53	R83		Go
0x54	R84		Go
0x55	R85		Go
0x56	R86		Go
0x57	R87		Go
0x58	R88		Go
0x59	R89		Go
0x5A	R90		Go
0x5B	R91		Go

Copyright © 2022 Texas Instruments Incorporated

表 7-18. Device Registers (continued)

Offset	Acronym	Register Name	Section
0x5C	R92		Go
0x5D	R93		Go
0x5E	R94		Go
0x5F	R95		Go
0x60	R96		Go
0x61	R97		Go
0x62	R98		Go
0x63	R99		Go
0x64	R100		Go
0x65	R101		Go
0x66	R102		Go
0x67	R103		Go
0x68	R104		Go
0x69	R105		Go
0x6A	R106		Go
0x6B	R107		Go
0x6C	R108		Go
0x6D	R109		Go
0x6E	R110		Go
0x6F	R111		Go
0x70	R112		Go
0x71	R113		Go
0x72	R114		Go

Complex bit access types are encoded to fit into small table cells. 表 7-19 shows the codes that are used for access types in this section.

表 7-19. Device Access Type Codes

Access Type	Code	Description
Read Type		

表 7-19. Device Access Type Codes (continued)

Access Type	Code	Description
R	R	Read
Write Type		
W	W	Write
Reset or Default Value		
-n		Value after reset or the default value

Copyright © 2022 Texas Instruments Incorporated

7.6.1 R0 Register (Offset = 0x0) [reset = 0x200C]

R0 is shown in 图 7-10 and described in 表 7-20.

Return to 表 7-18.

图 7-10. R0 Register

15	14	13	12	11	10	9	8
RESERVED	VCO_PHASE_SYNC	RESERVED				OUT_MUTE	FCAL_HPFD_ADJ
R/W-0x0	R/W-0x0	R/W-0x8				R/W-0x0	R/W-0x0

7	6	5	4	3	2	1	0
FCAL_HPFD_ADJ	RESERVED			FCAL_EN	MUXOUT_LD_SEL	RESET	POWERDOWN
R/W-0x0	R/W-0x0			R/W-0x1	R/W-0x1	R/W-0x0	R/W-0x0

表 7-20. R0 Register Field Descriptions

Bit	Field	Type	Reset	Description
15	RESERVED	R/W	0x0	Program 0x0 to this field.
14	VCO_PHASE_SYNC	R/W	0x0	Enables phase SYNC. In this state, part of the channel divider is put in the feedback path to ensure deterministic phase. The action of toggling this bit from 0 to 1 also sends an asynchronous SYNC pulse. 0x0 = Normal operation 0x1 = Phase SYNC enabled
13-10	RESERVED	R/W	0x8	Program 0x8 to this field.
9	OUT_MUTE	R/W	0x0	Mute the outputs (RFOUTA / RFOUTB) when the VCO is calibrating. 0x0 = Disabled 0x1 = Muted
8-7	FCAL_HPFD_ADJ	R/W	0x0	Set this field in accordance to the phase detector frequency for optimal VCO calibration. 0x0 = f_{PD} ≤ 100 MHz 0x1 = 100 MHz < f_{PD} ≤ 150 MHz 0x2 = 150 MHz < f_{PD} ≤ 200 MHz 0x3 = f_{PD} > 200 MHz
6-4	RESERVED	R/W	0x0	Program 0x1 to this field.
3	FCAL_EN	R/W	0x1	Writing register R0 with this bit set to a '1' enables and triggers the VCO frequency calibration. 0x0 = No VCO frequency calibration 0x1 = Enabled
2	MUXOUT_LD_SEL	R/W	0x1	Selects the functionality of the MUXOUT pin. 0x0 = Register readback 0x1 = Lock detect
1	RESET	R/W	0x0	Register reset. This resets all registers and state machines. After writing a '1', you must write a '0' to remove the reset. It is recommended to toggle the RESET bit before programming the part to ensure consistent performance. 0x0 = Normal operation 0x1 = Reset
0	POWERDOWN	R/W	0x0	Powers down device. 0x0 = Normal operation 0x1 = Powered down

7.6.2 R1 Register (Offset = 0x1) [reset = 0x80C]

R1 is shown in 图 7-11 and described in 表 7-21.

Return to 表 7-18.

图 7-11. R1 Register

15	14	13	12	11	10	9	8
RESERVED							
R/W-0x80							

7	6	5	4	3	2	1	0
RESERVED				MUXOUT_CTRL	CAL_CLK_DIV		
R/W-0x80				R/W-0x1	R/W-0x4		

表 7-21. R1 Register Field Descriptions

Bit	Field	Type	Reset	Description
15-4	RESERVED	R/W	0x80	Program 0x80 to this field.
3	MUXOUT_CTRL	R/W	0x1	Sets the MUXOUT pin status. 0x0 = Tri-state 0x1 = Normal operation
2-0	CAL_CLK_DIV	R/W	0x4	Divides down the f_{OSC} frequency to the state machine clock frequency. $f_{SM} = f_{OSC} / (2^{CAL_CLK_DIV})$. Ensure that the state machine clock frequency is 50 MHz or less. 0x0 = $f_{OSC} \leq 50$ MHz 0x1 = 50 MHz < $f_{OSC} \leq 100$ MHz 0x2 = 100 MHz < $f_{OSC} \leq 200$ MHz 0x3 = 200 MHz < $f_{OSC} \leq 400$ MHz 0x4 = 400 MHz < $f_{OSC} \leq 800$ MHz 0x5 = f_{OSC} > 800 MHz All other values are not used.

7.6.3 R2 Register (Offset = 0x2) [reset = 0x500]

R2 is shown in 图 7-12 and described in 表 7-22.

Return to 表 7-18.

图 7-12. R2 Register

15	14	13	12	11	10	9	8	7	6	5	4	3	2	1	0
RESERVED															
R/W-0x500															

表 7-22. R2 Register Field Descriptions

Bit	Field	Type	Reset	Description
15-0	RESERVED	R/W	0x500	Program 0x500 to this field.

7.6.4 R3 Register (Offset = 0x3) [reset = 0x642]

R3 is shown in 图 7-13 and described in 表 7-23.

Return to 表 7-18.

图 7-13. R3 Register

15	14	13	12	11	10	9	8	7	6	5	4	3	2	1	0
RESERVED															
R/W-0x642															

表 7-23. R3 Register Field Descriptions

Bit	Field	Type	Reset	Description
15-0	RESERVED	R/W	0x642	Program 0x642 to this field.

Copyright © 2022 Texas Instruments Incorporated

7.6.5 R4 Register (Offset = 0x4) [reset = 0xA43]

R4 is shown in 图 7-14 and described in 表 7-24.

Return to 表 7-18.

图 7-14. R4 Register

15	14	13	12	11	10	9	8	7	6	5	4	3	2	1	0
RESERVED															
R/W-0xA43															

表 7-24. R4 Register Field Descriptions

Bit	Field	Type	Reset	Description
15-0	RESERVED	R/W	0xA43	Program 0xE43 to this field.

7.6.6 R5 Register (Offset = 0x5) [reset = 0xC8]

R5 is shown in 图 7-15 and described in 表 7-25.

Return to 表 7-18.

图 7-15. R5 Register

15	14	13	12	11	10	9	8	7	6	5	4	3	2	1	0
RESERVED															
R/W-0xC8															

表 7-25. R5 Register Field Descriptions

Bit	Field	Type	Reset	Description
15-0	RESERVED	R/W	0xC8	Program 0x3E8 to this field.

7.6.7 R6 Register (Offset = 0x6) [reset = 0xC802]

R6 is shown in 图 7-16 and described in 表 7-26.

Return to 表 7-18.

图 7-16. R6 Register

15	14	13	12	11	10	9	8	7	6	5	4	3	2	1	0
RESERVED															
R/W-0xC802															

表 7-26. R6 Register Field Descriptions

Bit	Field	Type	Reset	Description
15-0	RESERVED	R/W	0xC802	Program 0x7802 to this field.

7.6.8 R7 Register (Offset = 0x7) [reset = 0xB2]

R7 is shown in 图 7-17 and described in 表 7-27.

Return to 表 7-18.

图 7-17. R7 Register

15	14	13	12	11	10	9	8	7	6	5	4	3	2	1	0
RESERVED															
R/W-0xB2															

表 7-27. R7 Register Field Descriptions

Bit	Field	Type	Reset	Description
15-0	RESERVED	R/W	0xB2	Program 0xB2 to this field.

Copyright © 2022 Texas Instruments Incorporated

7.6.9 R8 Register (Offset = 0x8) [reset = 0x2000]

R8 is shown in 图 7-18 and described in 表 7-28.

Return to 表 7-18.

图 7-18. R8 Register

15	14	13	12	11	10	9	8
RESERVED	VCO_DACISET_FORCE	RESERVED		VCO_CAPCTRL_FORCE	RESERVED		
R/W-0x0	R/W-0x0	R/W-0x2		R/W-0x0	R/W-0x0		
7	6	5	4	3	2	1	0
RESERVED							
R/W-0x0							

表 7-28. R8 Register Field Descriptions

Bit	Field	Type	Reset	Description
15	RESERVED	R/W	0x0	Program 0x0 to this field.
14	VCO_DACISET_FORCE	R/W	0x0	Forces VCO_DACISET value. Useful for fully assisted VCO calibration and debugging purposes. 0x0 = Normal operation 0x1 = Use VCO_DACISET value instead of the value obtained from VCO calibration
13-12	RESERVED	R/W	0x2	Program 0x2 to this field.
11	VCO_CAPCTRL_FORCE	R/W	0x0	Forces VCO_CAPCTRL value. Useful for fully assisted VCO calibration and debugging purposes. 0x0 = Normal operation 0x1 = Use VCO_CAPCTRL value instead of the value obtained from VCO calibration
10-0	RESERVED	R/W	0x0	Program 0x0 to this field.

7.6.10 R9 Register (Offset = 0x9) [reset = 0x604]

R9 is shown in 图 7-19 and described in 表 7-29.

Return to 表 7-18.

图 7-19. R9 Register

15	14	13	12	11	10	9	8
RESERVED			OSC_2X	RESERVED			
R/W-0x0			R/W-0x0	R/W-0x604			
7	6	5	4	3	2	1	0
RESERVED							
R/W-0x604							

表 7-29. R9 Register Field Descriptions

Bit	Field	Type	Reset	Description
15-13	RESERVED	R/W	0x0	Program 0x0 to this field.
12	OSC_2X	R/W	0x0	Enables OSCIN doubler. 0x0 = Disabled 0x1 = Enable
11-0	RESERVED	R/W	0x604	Program 0x604 to this field.

7.6.11 R10 Register (Offset = 0xA) [reset = 0x10F8]

R10 is shown in 图 7-20 and described in 表 7-30.

Copyright © 2022 Texas Instruments Incorporated

Return to 表 7-18.

图 7-20. R10 Register

15	14	13	12	11	10	9	8	7	6	5	4	3	2	1	0
RESERVED															
R/W-0x10F8															

表 7-30. R10 Register Field Descriptions

Bit	Field	Type	Reset	Description
15-0	RESERVED	R/W	0x10F8	Program 0x10D8 to this field.

7.6.12 R11 Register (Offset = 0xB) [reset = 0x18]

R11 is shown in 图 7-21 and described in 表 7-31.

Return to 表 7-18.

图 7-21. R11 Register

15	14	13	12	11	10	9	8
RESERVED				PLL_R			
R/W-0x0				R/W-0x1			
7	6	5	4	3	2	1	0
PLL_R				RESERVED			
R/W-0x1				R/W-0x8			

表 7-31. R11 Register Field Descriptions

Bit	Field	Type	Reset	Description
15-12	RESERVED	R/W	0x0	Program 0x0 to this field.
11-4	PLL_R	R/W	0x1	PLL Post-R divider value.
3-0	RESERVED	R/W	0x8	Program 0x8 to this field.

7.6.13 R12 Register (Offset = 0xC) [reset = 0x5001]

R12 is shown in 图 7-22 and described in 表 7-32.

Return to 表 7-18.

图 7-22. R12 Register

15	14	13	12	11	10	9	8
RESERVED							
R/W-0x50							
7	6	5	4	3	2	1	0
PLL_R_PRE							
R/W-0x1							

表 7-32. R12 Register Field Descriptions

Bit	Field	Type	Reset	Description
15-8	RESERVED	R/W	0x50	Program 0x50 to this field.
7-0	PLL_R_PRE	R/W	0x1	PLL Pre-R divider value.

7.6.14 R13 Register (Offset = 0xD) [reset = 0x4000]

R13 is shown in 图 7-23 and described in 表 7-33.

Return to 表 7-18.

图 7-23. R13 Register

15	14	13	12	11	10	9	8	7	6	5	4	3	2	1	0

图 7-23. R13 Register (continued)

RESERVED
R/W-0x4000

表 7-33. R13 Register Field Descriptions

Bit	Field	Type	Reset	Description
15-0	RESERVED	R/W	0x4000	Program 0x4000 to this field.

7.6.15 R14 Register (Offset = 0xE) [reset = 0x1E70]

R14 is shown in 图 7-24 and described in 表 7-34.

Return to 表 7-18.

图 7-24. R14 Register

15	14	13	12	11	10	9	8
RESERVED							
R/W-0x3C							
7	6	5	4	3	2	1	0
RESERVED	CPG			RESERVED			
R/W-0x3C	R/W-0x7			R/W-0x0			

表 7-34. R14 Register Field Descriptions

Bit	Field	Type	Reset	Description
15-7	RESERVED	R/W	0x3C	Program 0x3C to this field.
6-4	CPG	R/W	0x7	Effective charge pump gain. This is the sum of the up and down currents. 0x0 = Tri-state 0x4 = 3 mA 0x1 = 6 mA 0x5 = 9 mA 0x3 = 12 mA 0x7 = 15 mA All other values are not used.
3-0	RESERVED	R/W	0x0	Program 0x0 to this field.

7.6.16 R15 Register (Offset = 0xF) [reset = 0x64F]

R15 is shown in 图 7-25 and described in 表 7-35.

Return to 表 7-18.

图 7-25. R15 Register

15	14	13	12	11	10	9	8	7	6	5	4	3	2	1	0
RESERVED															
R/W-0x64F															

表 7-35. R15 Register Field Descriptions

Bit	Field	Type	Reset	Description
15-0	RESERVED	R/W	0x64F	Program 0x64F to this field.

7.6.17 R16 Register (Offset = 0x10) [reset = 0x80]

R16 is shown in 图 7-26 and described in 表 7-36.

Return to 表 7-18.

图 7-26. R16 Register

15	14	13	12	11	10	9	8
RESERVED							VCO_DACISET

Copyright © 2022 Texas Instruments Incorporated

图 7-26. R16 Register (continued)

R/W-0x0							R/W-0x80
7	6	5	4	3	2	1	0
VCO_DACISET							
R/W-0x80							

表 7-36. R16 Register Field Descriptions

Bit	Field	Type	Reset	Description
15-9	RESERVED	R/W	0x0	Program 0x0 to this field.
8-0	VCO_DACISET	R/W	0x80	Programmable current setting for the VCO that is applied when VCO_DACISET_FORCE = 1. Useful for fully-assisted VCO calibration.

7.6.18 R17 Register (Offset = 0x11) [reset = 0x96]

R17 is shown in 图 7-27 and described in 表 7-37.

Return to 表 7-18.

图 7-27. R17 Register

15	14	13	12	11	10	9	8	7	6	5	4	3	2	1	0
RESERVED															
R/W-0x96															

表 7-37. R17 Register Field Descriptions

Bit	Field	Type	Reset	Description
15-0	RESERVED	R/W	0x96	Program 0x12C to this field.

7.6.19 R18 Register (Offset = 0x12) [reset = 0x64]

R18 is shown in 图 7-28 and described in 表 7-38.

Return to 表 7-18.

图 7-28. R18 Register

15	14	13	12	11	10	9	8	7	6	5	4	3	2	1	0
RESERVED															
R/W-0x64															

表 7-38. R18 Register Field Descriptions

Bit	Field	Type	Reset	Description
15-0	RESERVED	R/W	0x64	Program 0x64 to this field.

7.6.20 R19 Register (Offset = 0x13) [reset = 0x27B7]

R19 is shown in 图 7-29 and described in 表 7-39.

Return to 表 7-18.

图 7-29. R19 Register

15	14	13	12	11	10	9	8
RESERVED							
R/W-0x27							
7	6	5	4	3	2	1	0
VCO_CAPCTRL							
R/W-0xB7							

表 7-39. R19 Register Field Descriptions

Bit	Field	Type	Reset	Description
15-8	RESERVED	R/W	0x27	Program 0x27 to this field.
7-0	VCO_CAPCTRL	R/W	0xB7	Programmable band within VCO core that applies when VCO_CAPCTRL_FORCE = 1. Valid values are 183 to 0, where the higher number is a lower frequency.

7.6.21 R20 Register (Offset = 0x14) [reset = 0x3048]

R20 is shown in 图 7-30 and described in 表 7-40.

Return to 表 7-18.

图 7-30. R20 Register

15	14	13	12	11	10	9	8
RESERVED		VCO_SEL			VCO_SEL_FORCE	RESERVED	
R/W-0x0		R/W-0x6			R/W-0x0	R/W-0x48	
7	6	5	4	3	2	1	0
RESERVED							
R/W-0x48							

表 7-40. R20 Register Field Descriptions

Bit	Field	Type	Reset	Description
15-14	RESERVED	R/W	0x0	Program 0x3 to this field.
13-11	VCO_SEL	R/W	0x6	User specified start VCO for calibration. Also is the VCO core that is forced by VCO_SEL_FORCE. 0x1 = VCO1 0x2 = VCO2 ..... 0x7 = VCO7
10	VCO_SEL_FORCE	R/W	0x0	Forces the VCO to use the core specified by VCO_SEL. 0x0 = Disabled 0x1 = Enable
9-0	RESERVED	R/W	0x48	Program 0x48 to this field.

7.6.22 R21 Register (Offset = 0x15) [reset = 0x401]

R21 is shown in 图 7-31 and described in 表 7-41.

Return to 表 7-18.

图 7-31. R21 Register

15	14	13	12	11	10	9	8	7	6	5	4	3	2	1	0
RESERVED															
R/W-0x401															

表 7-41. R21 Register Field Descriptions

Bit	Field	Type	Reset	Description
15-0	RESERVED	R/W	0x401	Program 0x401 to this field.

7.6.23 R22 Register (Offset = 0x16) [reset = 0x1]

R22 is shown in 图 7-32 and described in 表 7-42.

Return to 表 7-18.

图 7-32. R22 Register

15	14	13	12	11	10	9	8	7	6	5	4	3	2	1	0
RESERVED															

Copyright © 2022 Texas Instruments Incorporated

图 7-32. R22 Register (continued)

R/W-0x1

表 7-42. R22 Register Field Descriptions

Bit	Field	Type	Reset	Description
15-0	RESERVED	R/W	0x1	Program 0x1 to this field

7.6.24 R23 Register (Offset = 0x17) [reset = 0x7C]

R23 is shown in 图 7-33 and described in 表 7-43.

Return to 表 7-18.

图 7-33. R23 Register

15	14	13	12	11	10	9	8	7	6	5	4	3	2	1	0
RESERVED															
R/W-0x7C															

表 7-43. R23 Register Field Descriptions

Bit	Field	Type	Reset	Description
15-0	RESERVED	R/W	0x7C	Program 0x7C to this field.

7.6.25 R24 Register (Offset = 0x18) [reset = 0x71A]

R24 is shown in 图 7-34 and described in 表 7-44.

Return to 表 7-18.

图 7-34. R24 Register

15	14	13	12	11	10	9	8	7	6	5	4	3	2	1	0
RESERVED															
R/W-0x71A															

表 7-44. R24 Register Field Descriptions

Bit	Field	Type	Reset	Description
15-0	RESERVED	R/W	0x71A	Program 0x71A to this field.

7.6.26 R25 Register (Offset = 0x19) [reset = 0x624]

R25 is shown in 图 7-35 and described in 表 7-45.

Return to 表 7-18.

图 7-35. R25 Register

15	14	13	12	11	10	9	8	7	6	5	4	3	2	1	0
RESERVED															
R/W-0x624															

表 7-45. R25 Register Field Descriptions

Bit	Field	Type	Reset	Description
15-0	RESERVED	R/W	0x624	Program 0x624 to this field.

7.6.27 R26 Register (Offset = 0x1A) [reset = 0xDB0]

R26 is shown in 图 7-36 and described in 表 7-46.

Return to 表 7-18.

图 7-36. R26 Register

15	14	13	12	11	10	9	8	7	6	5	4	3	2	1	0

图 7-36. R26 Register (continued)

RESERVED
R/W-0xDB0

表 7-46. R26 Register Field Descriptions

Bit	Field	Type	Reset	Description
15-0	RESERVED	R/W	0xDB0	Program 0xDB0 to this field.

7.6.28 R27 Register (Offset = 0x1B) [reset = 0x2]

R27 is shown in 图 7-37 and described in 表 7-47.

Return to 表 7-18.

图 7-37. R27 Register

15	14	13	12	11	10	9	8	7	6	5	4	3	2	1	0
RESERVED															
R/W-0x2															

表 7-47. R27 Register Field Descriptions

Bit	Field	Type	Reset	Description
15-0	RESERVED	R/W	0x2	Program 0x2 to this field.

7.6.29 R28 Register (Offset = 0x1C) [reset = 0x488]

R28 is shown in 图 7-38 and described in 表 7-48.

Return to 表 7-18.

图 7-38. R28 Register

15	14	13	12	11	10	9	8	7	6	5	4	3	2	1	0
RESERVED															
R/W-0x488															

表 7-48. R28 Register Field Descriptions

Bit	Field	Type	Reset	Description
15-0	RESERVED	R/W	0x488	Program 0x488 to this field.

7.6.30 R29 Register (Offset = 0x1D) [reset = 0x318C]

R29 is shown in 图 7-39 and described in 表 7-49.

Return to 表 7-18.

图 7-39. R29 Register

15	14	13	12	11	10	9	8	7	6	5	4	3	2	1	0
RESERVED															
R/W-0x318C															

表 7-49. R29 Register Field Descriptions

Bit	Field	Type	Reset	Description
15-0	RESERVED	R/W	0x318C	Program 0x318C to this field.

7.6.31 R30 Register (Offset = 0x1E) [reset = 0x318C]

R30 is shown in 图 7-40 and described in 表 7-50.

Return to 表 7-18.

Copyright © 2022 Texas Instruments Incorporated

图 7-40. R30 Register

15	14	13	12	11	10	9	8	7	6	5	4	3	2	1	0
RESERVED															
R/W-0x318C															

表 7-50. R30 Register Field Descriptions

Bit	Field	Type	Reset	Description
15-0	RESERVED	R/W	0x318C	Program 0x318C to this field.

7.6.32 R31 Register (Offset = 0x1F) [reset = 0xC3EC]

R31 is shown in 图 7-41 and described in 表 7-51.

Return to 表 7-18.

图 7-41. R31 Register

15	14	13	12	11	10	9	8
RESERVED	SEG1_EN	RESERVED					
R/W-0x1	R/W-0x1	R/W-0x3EC					
7	**6**	**5**	**4**	**3**	**2**	**1**	**0**
RESERVED							
R/W-0x3EC							

表 7-51. R31 Register Field Descriptions

Bit	Field	Type	Reset	Description
15	RESERVED	R/W	0x1	Program 0x0 to this field.
14	SEG1_EN	R/W	0x1	Enables the first divide-by-2 in channel divider. 0x0 = Disabled 0x1 = Enable
13-0	RESERVED	R/W	0x3EC	Program 0x3EC to this field.

7.6.33 R32 Register (Offset = 0x20) [reset = 0x393]

R32 is shown in 图 7-42 and described in 表 7-52.

Return to 表 7-18.

图 7-42. R32 Register

15	14	13	12	11	10	9	8	7	6	5	4	3	2	1	0
RESERVED															
R/W-0x393															

表 7-52. R32 Register Field Descriptions

Bit	Field	Type	Reset	Description
15-0	RESERVED	R/W	0x393	Program 0x393 to this field.

7.6.34 R33 Register (Offset = 0x21) [reset = 0x1E21]

R33 is shown in 图 7-43 and described in 表 7-53.

Return to 表 7-18.

图 7-43. R33 Register

15	14	13	12	11	10	9	8	7	6	5	4	3	2	1	0
RESERVED															
R/W-0x1E21															

表 7-53. R33 Register Field Descriptions

Bit	Field	Type	Reset	Description
15-0	RESERVED	R/W	0x1E21	Program 0x1E21 to this field.

7.6.35 R34 Register (Offset = 0x22) [reset = 0x10]

R34 is shown in 图 7-44 and described in 表 7-54.

Return to 表 7-18.

图 7-44. R34 Register

15	14	13	12	11	10	9	8
RESERVED							
R/W-0x2							
7	6	5	4	3	2	1	0
RESERVED					PLL_N[18:16]		
R/W-0x2					R/W-0x0		

表 7-54. R34 Register Field Descriptions

Bit	Field	Type	Reset	Description
15-3	RESERVED	R/W	0x2	Program 0x0 to this field.
2-0	PLL_N[18:16]	R/W	0x0	Upper 3 bits of N divider, total 19 bits, split as 16 + 3.

7.6.36 R35 Register (Offset = 0x23) [reset = 0x4]

R35 is shown in 图 7-45 and described in 表 7-55.

Return to 表 7-18.

图 7-45. R35 Register

15	14	13	12	11	10	9	8	7	6	5	4	3	2	1	0
RESERVED															
R/W-0x4															

表 7-55. R35 Register Field Descriptions

Bit	Field	Type	Reset	Description
15-0	RESERVED	R/W	0x4	Program 0x4 to this field.

7.6.37 R36 Register (Offset = 0x24) [reset = 0x70]

R36 is shown in 图 7-46 and described in 表 7-56.

Return to 表 7-18.

图 7-46. R36 Register

15	14	13	12	11	10	9	8	7	6	5	4	3	2	1	0
PLL_N[15:0]															
R/W-0x70															

表 7-56. R36 Register Field Descriptions

Bit	Field	Type	Reset	Description
15-0	PLL_N[15:0]	R/W	0x70	Lower 16 bits of N divider.

7.6.38 R37 Register (Offset = 0x25) [reset = 0x205]

R37 is shown in 图 7-47 and described in 表 7-57.

Return to 表 7-18.

Copyright © 2022 Texas Instruments Incorporated

图 7-47. R37 Register

15	14	13	12	11	10	9	8
RESERVED		PFD_DLY_SEL					
R/W-0x0		R/W-0x2					
7	6	5	4	3	2	1	0
RESERVED							
R/W-0x5							

表 7-57. R37 Register Field Descriptions

Bit	Field	Type	Reset	Description
15-14	RESERVED	R/W	0x0	Program 0x2 to this field.
13-8	PFD_DLY_SEL	R/W	0x2	Programmable phase detector delay. This should be programmed based on VCO frequency, fractional order, and N divider value. See 表 7-2 for details.
7-0	RESERVED	R/W	0x5	Program 0x4 to this field.

7.6.39 R38 Register (Offset = 0x26) [reset = 0xFFFF]

R38 is shown in 图 7-48 and described in 表 7-58.

Return to 表 7-18.

图 7-48. R38 Register

15	14	13	12	11	10	9	8	7	6	5	4	3	2	1	0
PLL_DEN[31:16]															
R/W-0xFFFF															

表 7-58. R38 Register Field Descriptions

Bit	Field	Type	Reset	Description
15-0	PLL_DEN[31:16]	R/W	0xFFFF	Upper 16 bits of fractional denominator (DEN).

7.6.40 R39 Register (Offset = 0x27) [reset = 0xFFFF]

R39 is shown in 图 7-49 and described in 表 7-59.

Return to 表 7-18.

图 7-49. R39 Register

15	14	13	12	11	10	9	8	7	6	5	4	3	2	1	0
PLL_DEN[15:0]															
R/W-0xFFFF															

表 7-59. R39 Register Field Descriptions

Bit	Field	Type	Reset	Description
15-0	PLL_DEN[15:0]	R/W	0xFFFF	Lower 16 bits of fractional denominator (DEN).

7.6.41 R40 Register (Offset = 0x28) [reset = 0x0]

R40 is shown in 图 7-50 and described in 表 7-60.

Return to 表 7-18.

图 7-50. R40 Register

15	14	13	12	11	10	9	8	7	6	5	4	3	2	1	0
MASH_SEED[31:16]															
R/W-0x0															

表 7-60. R40 Register Field Descriptions

Bit	Field	Type	Reset	Description
15-0	MASH_SEED[31:16]	R/W	0x0	Upper 16 bits of MASH_SEED. MASH_SEED sets the initial state of the fractional engine. Useful for producing a phase shift and fractional spur optimization.

7.6.42 R41 Register (Offset = 0x29) [reset = 0x0]

R41 is shown in 图 7-51 and described in 表 7-61.

Return to 表 7-18.

图 7-51. R41 Register

15	14	13	12	11	10	9	8	7	6	5	4	3	2	1	0
MASH_SEED[15:0]															
R/W-0x0															

表 7-61. R41 Register Field Descriptions

Bit	Field	Type	Reset	Description
15-0	MASH_SEED[15:0]	R/W	0x0	Lower 16 bits of MASH_SEED. MASH_SEED sets the initial state of the fractional engine. Useful for producing a phase shift and fractional spur optimization.

7.6.43 R42 Register (Offset = 0x2A) [reset = 0x0]

R42 is shown in 图 7-52 and described in 表 7-62.

Return to 表 7-18.

图 7-52. R42 Register

15	14	13	12	11	10	9	8	7	6	5	4	3	2	1	0
PLL_NUM[31:16]															
R/W-0x0															

表 7-62. R42 Register Field Descriptions

Bit	Field	Type	Reset	Description
15-0	PLL_NUM[31:16]	R/W	0x0	Upper 16 bits of fractional numerator (NUM).

7.6.44 R43 Register (Offset = 0x2B) [reset = 0x0]

R43 is shown in 图 7-53 and described in 表 7-63.

Return to 表 7-18.

图 7-53. R43 Register

15	14	13	12	11	10	9	8	7	6	5	4	3	2	1	0
PLL_NUM[15:0]															
R/W-0x0															

表 7-63. R43 Register Field Descriptions

Bit	Field	Type	Reset	Description
15-0	PLL_NUM[15:0]	R/W	0x0	Lower 16 bits of fractional numerator (NUM).

7.6.45 R44 Register (Offset = 0x2C) [reset = 0x22A2]

R44 is shown in 图 7-54 and described in 表 7-64.

Return to 表 7-18.

图 7-54. R44 Register

15	14	13	12	11	10	9	8

Copyright © 2022 Texas Instruments Incorporated

图 7-54. R44 Register (continued)

RESERVED	OUTA_PWR
R/W-0x0	R/W-0x22

7	6	5	4	3	2	1	0
OUTB_PD	OUTA_PD	MASH_RESET_N	RESERVED		MASH_ORDER		
R/W-0x1	R/W-0x0	R/W-0x1	R/W-0x0		R/W-0x2		

表 7-64. R44 Register Field Descriptions

Bit	Field	Type	Reset	Description
15-14	RESERVED	R/W	0x0	Program 0x0 to this field.
13-8	OUTA_PWR	R/W	0x22	Sets current that controls output power for RFOUTA. 0x0 is minimum current; 0x1F is maximum current.
7	OUTB_PD	R/W	0x1	Powers down RFOUTB. 0x0 = Normal operation 0x1 = Powered down
6	OUTA_PD	R/W	0x0	Powers down RFOUTA. 0x0 = Normal operation 0x1 = Powered down
5	MASH_RESET_N	R/W	0x1	Resets MASH. 0x0 = Reset 0x1 = Normal operation
4-3	RESERVED	R/W	0x0	Program 0x0 to this field.
2-0	MASH_ORDER	R/W	0x2	Sets the MASH order. 0x0: Integer mode 0x1: First order modulator 0x2: Second order modulator 0x3: Third order modulator All other values are not used.

7.6.46 R45 Register (Offset = 0x2D) [reset = 0xC622]

R45 is shown in 图 7-55 and described in 表 7-65.

Return to 表 7-18.

图 7-55. R45 Register

15	14	13	12	11	10	9	8
RESERVED			OUTA_MUX		RESERVED		
R/W-0x6			R/W-0x0		R/W-0x18		

7	6	5	4	3	2	1	0
RESERVED		OUTB_PWR					
R/W-0x18		R/W-0x22					

表 7-65. R45 Register Field Descriptions

Bit	Field	Type	Reset	Description
15-13	RESERVED	R/W	0x6	Program 0x6 to this field.
12-11	OUTA_MUX	R/W	0x0	Selects the input source to RFOUTA. 0x0 = Channel divider 0x1 = VCO 0x2 = Not used 0x3 = Reserved
10-6	RESERVED	R/W	0x18	Program 0x3 to this field.
5-0	OUTB_PWR	R/W	0x22	Sets current that controls output power for RFOUTB. 0x0 is minimum current; 0x1F is maximum current.

Copyright © 2022 Texas Instruments Incorporated

7.6.47 R46 Register (Offset = 0x2E) [reset = 0x7F0]

R46 is shown in 图 7-56 and described in 表 7-66.

Return to 表 7-18.

图 7-56. R46 Register

15	14	13	12	11	10	9	8
RESERVED							
R/W-0x1FC							
7	6	5	4	3	2	1	0
RESERVED						OUTB_MUX	
R/W-0x1FC						R/W-0x0	

表 7-66. R46 Register Field Descriptions

Bit	Field	Type	Reset	Description
15-2	RESERVED	R/W	0x1FC	Program 0x1FF to this field.
1-0	OUTB_MUX	R/W	0x0	Selects the input source to RFOUTB. 0x0 = Channel divider 0x1 = VCO 0x2 = SYSREF 0x3 = Reserved

7.6.48 R47 Register (Offset = 0x2F) [reset = 0x300]

R47 is shown in 图 7-57 and described in 表 7-67.

Return to 表 7-18.

图 7-57. R47 Register

15	14	13	12	11	10	9	8	7	6	5	4	3	2	1	0
RESERVED															
R/W-0x300															

表 7-67. R47 Register Field Descriptions

Bit	Field	Type	Reset	Description
15-0	RESERVED	R/W	0x300	Program 0x300 to this field.

7.6.49 R48 Register (Offset = 0x30) [reset = 0x3E0]

R48 is shown in 图 7-58 and described in 表 7-68.

Return to 表 7-18.

图 7-58. R48 Register

15	14	13	12	11	10	9	8	7	6	5	4	3	2	1	0
RESERVED															
R/W-0x3E0															

表 7-68. R48 Register Field Descriptions

Bit	Field	Type	Reset	Description
15-0	RESERVED	R/W	0x3E0	Program 0x300 to this field.

7.6.50 R49 Register (Offset = 0x31) [reset = 0x4180]

R49 is shown in 图 7-59 and described in 表 7-69.

Return to 表 7-18.

Copyright © 2022 Texas Instruments Incorporated

图 7-59. R49 Register

15	14	13	12	11	10	9	8	7	6	5	4	3	2	1	0
RESERVED															
R/W-0x4180															

表 7-69. R49 Register Field Descriptions

Bit	Field	Type	Reset	Description
15-0	RESERVED	R/W	0x4180	Program 0x4180 to this field.

7.6.51 R50 Register (Offset = 0x32) [reset = 0x80]

R50 is shown in 图 7-60 and described in 表 7-70.

Return to 表 7-18.

图 7-60. R50 Register

15	14	13	12	11	10	9	8	7	6	5	4	3	2	1	0
RESERVED															
R/W-0x80															

表 7-70. R50 Register Field Descriptions

Bit	Field	Type	Reset	Description
15-0	RESERVED	R/W	0x80	Program 0x0 to this field.

7.6.52 R51 Register (Offset = 0x33) [reset = 0x80]

R51 is shown in 图 7-61 and described in 表 7-71.

Return to 表 7-18.

图 7-61. R51 Register

15	14	13	12	11	10	9	8	7	6	5	4	3	2	1	0
RESERVED															
R/W-0x80															

表 7-71. R51 Register Field Descriptions

Bit	Field	Type	Reset	Description
15-0	RESERVED	R/W	0x80	Program 0x80 to this field.

7.6.53 R52 Register (Offset = 0x34) [reset = 0x420]

R52 is shown in 图 7-62 and described in 表 7-72.

Return to 表 7-18.

图 7-62. R52 Register

15	14	13	12	11	10	9	8	7	6	5	4	3	2	1	0
RESERVED															
R/W-0x420															

表 7-72. R52 Register Field Descriptions

Bit	Field	Type	Reset	Description
15-0	RESERVED	R/W	0x420	Program 0x420 to this field.

7.6.54 R53 Register (Offset = 0x35) [reset = 0x0]

R53 is shown in 图 7-63 and described in 表 7-73.

Return to 表 7-18.

图 7-63. R53 Register

15	14	13	12	11	10	9	8	7	6	5	4	3	2	1	0
RESERVED															
R/W-0x0															

表 7-73. R53 Register Field Descriptions

Bit	Field	Type	Reset	Description
15-0	RESERVED	R/W	0x0	Program 0x0 to this field.

7.6.55 R54 Register (Offset = 0x36) [reset = 0x0]

R54 is shown in 图 7-64 and described in 表 7-74.

Return to 表 7-18.

图 7-64. R54 Register

15	14	13	12	11	10	9	8	7	6	5	4	3	2	1	0
RESERVED															
R/W-0x0															

表 7-74. R54 Register Field Descriptions

Bit	Field	Type	Reset	Description
15-0	RESERVED	R/W	0x0	Program 0x0 to this field.

7.6.56 R55 Register (Offset = 0x37) [reset = 0x0]

R55 is shown in 图 7-65 and described in 表 7-75.

Return to 表 7-18.

图 7-65. R55 Register

15	14	13	12	11	10	9	8	7	6	5	4	3	2	1	0
RESERVED															
R/W-0x0															

表 7-75. R55 Register Field Descriptions

Bit	Field	Type	Reset	Description
15-0	RESERVED	R/W	0x0	Program 0x0 to this field.

7.6.57 R56 Register (Offset = 0x38) [reset = 0x0]

R56 is shown in 图 7-66 and described in 表 7-76.

Return to 表 7-18.

图 7-66. R56 Register

15	14	13	12	11	10	9	8	7	6	5	4	3	2	1	0
RESERVED															
R/W-0x0															

表 7-76. R56 Register Field Descriptions

Bit	Field	Type	Reset	Description
15-0	RESERVED	R/W	0x0	Program 0x0 to this field.

7.6.58 R57 Register (Offset = 0x39) [reset = 0x0]

R57 is shown in 图 7-67 and described in 表 7-77.

Return to 表 7-18.

Copyright © 2022 Texas Instruments Incorporated

图 7-67. R57 Register

15	14	13	12	11	10	9	8	7	6	5	4	3	2	1	0
RESERVED															
R/W-0x0															

表 7-77. R57 Register Field Descriptions

Bit	Field	Type	Reset	Description
15-0	RESERVED	R/W	0x0	Program 0x20 to this field.

7.6.59 R58 Register (Offset = 0x3A) [reset = 0x8001]

R58 is shown in 图 7-68 and described in 表 7-78.

Return to 表 7-18.

图 7-68. R58 Register

15	14	13	12	11	10	9	8
INPIN_IGNORE	RESERVED						
R/W-0x1	R/W-0x1						
7	6	5	4	3	2	1	0
RESERVED							
R/W-0x1							

表 7-78. R58 Register Field Descriptions

Bit	Field	Type	Reset	Description
15	INPIN_IGNORE	R/W	0x1	Ignore SYNC and SYSREFREQ pins when VCO_PHASE_SYNC = 0. This bit should be set to 1 unless VCO_PHASE_SYNC = 1.
14-0	RESERVED	R/W	0x1	Program 0x1 to this field.

7.6.60 R59 Register (Offset = 0x3B) [reset = 0x1]

R59 is shown in 图 7-69 and described in 表 7-79.

Return to 表 7-18.

图 7-69. R59 Register

15	14	13	12	11	10	9	8
RESERVED							
R/W-0x0							
7	6	5	4	3	2	1	0
RESERVED							LD_TYPE
R/W-0x0							R/W-0x1

表 7-79. R59 Register Field Descriptions

Bit	Field	Type	Reset	Description
15-1	RESERVED	R/W	0x0	Program 0x0 to this field.
0	LD_TYPE	R/W	0x1	Lock detect type. VCOCal lock detect asserts a high output after the VCO has finished calibration and the LD_DLY timeout counter is finished. Vtune and VCOCal lock detect asserts a high output when VCOCal lock detect would assert a signal and the tuning voltage to the VCO is within acceptable limits. 0x0 = VCOCal lock detect 0x1 = VCOCal and Vtune lock detect

7.6.61 R60 Register (Offset = 0x3C) [reset = 0x3E8]

R60 is shown in 图 7-70 and described in 表 7-80.

Return to 表 7-18.

图 7-70. R60 Register

15	14	13	12	11	10	9	8	7	6	5	4	3	2	1	0
LD_DLY															
R/W-0x3E8															

表 7-80. R60 Register Field Descriptions

Bit	Field	Type	Reset	Description
15-0	LD_DLY	R/W	0x3E8	For the VCOCal lock detect, this is the delay in 1/4 f_{PD} cycles that is added after the calibration is finished before the VCOCal lock detect is asserted high.

7.6.62 R61 Register (Offset = 0x3D) [reset = 0xA8]

R61 is shown in 图 7-71 and described in 表 7-81.

Return to 表 7-18.

图 7-71. R61 Register

15	14	13	12	11	10	9	8	7	6	5	4	3	2	1	0
RESERVED															
R/W-0xA8															

表 7-81. R61 Register Field Descriptions

Bit	Field	Type	Reset	Description
15-0	RESERVED	R/W	0xA8	Program 0xA8 to this field.

7.6.63 R62 Register (Offset = 0x3E) [reset = 0xAE]

R62 is shown in 图 7-72 and described in 表 7-82.

Return to 表 7-18.

图 7-72. R62 Register

15	14	13	12	11	10	9	8	7	6	5	4	3	2	1	0
RESERVED															
R/W-0xAE															

表 7-82. R62 Register Field Descriptions

Bit	Field	Type	Reset	Description
15-0	RESERVED	R/W	0xAE	Program 0x322 to this field.

7.6.64 R63 Register (Offset = 0x3F) [reset = 0x0]

R63 is shown in 图 7-73 and described in 表 7-83.

Return to 表 7-18.

图 7-73. R63 Register

15	14	13	12	11	10	9	8	7	6	5	4	3	2	1	0
RESERVED															
R/W-0x0															

表 7-83. R63 Register Field Descriptions

Bit	Field	Type	Reset	Description
15-0	RESERVED	R/W	0x0	Program 0x0 to this field.

Copyright © 2022 Texas Instruments Incorporated

7.6.65 R64 Register (Offset = 0x40) [reset = 0x1388]

R64 is shown in 图 7-74 and described in 表 7-84.

Return to 表 7-18.

图 7-74. R64 Register

15	14	13	12	11	10	9	8	7	6	5	4	3	2	1	0
RESERVED															
R/W-0x1388															

表 7-84. R64 Register Field Descriptions

Bit	Field	Type	Reset	Description
15-0	RESERVED	R/W	0x1388	Program 0x1388 to this field.

7.6.66 R65 Register (Offset = 0x41) [reset = 0x0]

R65 is shown in 图 7-75 and described in 表 7-85.

Return to 表 7-18.

图 7-75. R65 Register

15	14	13	12	11	10	9	8	7	6	5	4	3	2	1	0
RESERVED															
R/W-0x0															

表 7-85. R65 Register Field Descriptions

Bit	Field	Type	Reset	Description
15-0	RESERVED	R/W	0x0	Program 0x0 to this field.

7.6.67 R66 Register (Offset = 0x42) [reset = 0x140]

R66 is shown in 图 7-76 and described in 表 7-86.

Return to 表 7-18.

图 7-76. R66 Register

15	14	13	12	11	10	9	8	7	6	5	4	3	2	1	0
RESERVED															
R/W-0x140															

表 7-86. R66 Register Field Descriptions

Bit	Field	Type	Reset	Description
15-0	RESERVED	R/W	0x140	Program 0x1F4 to this field.

7.6.68 R67 Register (Offset = 0x43) [reset = 0x0]

R67 is shown in 图 7-77 and described in 表 7-87.

Return to 表 7-18.

图 7-77. R67 Register

15	14	13	12	11	10	9	8	7	6	5	4	3	2	1	0
RESERVED															
R/W-0x0															

表 7-87. R67 Register Field Descriptions

Bit	Field	Type	Reset	Description
15-0	RESERVED	R/W	0x0	Program 0x0 to this field.

Copyright © 2022 Texas Instruments Incorporated

7.6.69 R68 Register (Offset = 0x44) [reset = 0x3E8]

R68 is shown in 图 7-78 and described in 表 7-88.

Return to 表 7-18.

图 7-78. R68 Register

15	14	13	12	11	10	9	8	7	6	5	4	3	2	1	0
RESERVED															
R/W-0x3E8															

表 7-88. R68 Register Field Descriptions

Bit	Field	Type	Reset	Description
15-0	RESERVED	R/W	0x3E8	Program 0x3E8 to this field.

7.6.70 R69 Register (Offset = 0x45) [reset = 0x0]

R69 is shown in 图 7-79 and described in 表 7-89.

Return to 表 7-18.

图 7-79. R69 Register

15	14	13	12	11	10	9	8	7	6	5	4	3	2	1	0
MASH_RST_COUNT[31:16]															
R/W-0x0															

表 7-89. R69 Register Field Descriptions

Bit	Field	Type	Reset	Description
15-0	MASH_RST_COUNT[31:16]	R/W	0x0	Upper 16 bits of MASH_RST_COUNT.

7.6.71 R70 Register (Offset = 0x46) [reset = 0xC350]

R70 is shown in 图 7-80 and described in 表 7-90.

Return to 表 7-18.

图 7-80. R70 Register

15	14	13	12	11	10	9	8	7	6	5	4	3	2	1	0
MASH_RST_COUNT[15:0]															
R/W-0xC350															

表 7-90. R70 Register Field Descriptions

Bit	Field	Type	Reset	Description
15-0	MASH_RST_COUNT[15:0]	R/W	0xC350	Lower 16 bits of MASH_RST_COUNT. This register is used to add a delay when using phase SYNC. The delay should be set at least four times the PLL lock time. This delay is expressed in state machine clock periods. One of these periods is equal to $2^{CAL_CLK_DIV}$ / f_{OSC}.

7.6.72 R71 Register (Offset = 0x47) [reset = 0x80]

R71 is shown in 图 7-81 and described in 表 7-91.

Return to 表 7-18.

图 7-81. R71 Register

15	14	13	12	11	10	9	8
RESERVED							
R/W-0x0							
7	6	5	4	3	2	1	0

Copyright © 2022 Texas Instruments Incorporated

图 7-81. R71 Register (continued)

SYSREF_DIV_PRE	SYSREF_PULSE	SYSREF_EN	SYSREF_REPEAT	RESERVED
R/W-0x4	R/W-0x0	R/W-0x0	R/W-0x0	R/W-0x0

表 7-91. R71 Register Field Descriptions

Bit	Field	Type	Reset	Description
15-8	RESERVED	R/W	0x0	Program 0x0 to this field.
7-5	SYSREF_DIV_PRE	R/W	0x4	This divider is used to get the frequency input to the SYSREF interpolater within acceptable limits. 0x2 = Divided by 2 0x4 = Divided by 4
4	SYSREF_PULSE	R/W	0x0	When in master mode (SYSREF_REPEAT = 0), this allows multiple pulses (as determined by SYSREF_PULSE_CNT) to be sent out whenever the SYSREFREQ pin goes high. 0x0 = Disabled 0x1 = Enable
3	SYSREF_EN	R/W	0x0	Enables SYSREF mode. 0x0 = Disabled 0x1 = Enabled
2	SYSREF_REPEAT	R/W	0x0	Defines SYSREF mode. In Master mode, SYSREF pulses are generated continuously at the output. In Repeater mode, SYSREF pulses are generated in response to the SYSREFREQ pin. 0x0 = Master mode 0x1 = Repeater Mode
1-0	RESERVED	R/W	0x0	Program 0x0 to this field.

7.6.73 R72 Register (Offset = 0x48) [reset = 0x1]

R72 is shown in 图 7-82 and described in 表 7-92.

Return to 表 7-18.

图 7-82. R72 Register

15	14	13	12	11	10	9	8
RESERVED					SYSREF_DIV		
R/W-0x0					R/W-0x1		
7	6	5	4	3	2	1	0
SYSREF_DIV							
R/W-0x1							

表 7-92. R72 Register Field Descriptions

Bit	Field	Type	Reset	Description
15-11	RESERVED	R/W	0x0	Program 0x0 to this field.
10-0	SYSREF_DIV	R/W	0x1	This divider further divides the output frequency for the SYSREF.

7.6.74 R73 Register (Offset = 0x49) [reset = 0x3F]

R73 is shown in 图 7-83 and described in 表 7-93.

Return to 表 7-18.

图 7-83. R73 Register

15	14	13	12	11	10	9	8
RESERVED				JESD_DAC2_CTRL			
R/W-0x0				R/W-0x0			

图 7-83. R73 Register (continued)

7	6	5	4	3	2	1	0
JESD_DAC2_CTRL		JESD_DAC1_CTRL					
R/W-0x0		R/W-0x3F					

表 7-93. R73 Register Field Descriptions

Bit	Field	Type	Reset	Description
15-12	RESERVED	R/W	0x0	Program 0x0 to this field.
11-6	JESD_DAC2_CTRL	R/W	0x0	Programmable delay adjustment for SYSREF mode.
5-0	JESD_DAC1_CTRL	R/W	0x3F	Programmable delay adjustment for SYSREF mode.

7.6.75 R74 Register (Offset = 0x4A) [reset = 0x0]

R74 is shown in 图 7-84 and described in 表 7-94.

Return to 表 7-18.

图 7-84. R74 Register

15	14	13	12	11	10	9	8
SYSREF_PULSE_CNT				JESD_DAC4_CTRL			
R/W-0x0				R/W-0x0			
7	**6**	**5**	**4**	**3**	**2**	**1**	**0**
JESD_DAC4_CTRL		JESD_DAC3_CTRL					
R/W-0x0		R/W-0x0					

表 7-94. R74 Register Field Descriptions

Bit	Field	Type	Reset	Description
15-12	SYSREF_PULSE_CNT	R/W	0x0	Used in SYSREF_REPEAT mode to define how many pulses are sent.
11-6	JESD_DAC4_CTRL	R/W	0x0	Programmable delay adjustment for SYSREF mode.
5-0	JESD_DAC3_CTRL	R/W	0x0	Programmable delay adjustment for SYSREF mode.

7.6.76 R75 Register (Offset = 0x4B) [reset = 0x800]

R75 is shown in 图 7-85 and described in 表 7-95.

Return to 表 7-18.

图 7-85. R75 Register

15	14	13	12	11	10	9	8
RESERVED					CHDIV		
R/W-0x1					R/W-0x0		
7	**6**	**5**	**4**	**3**	**2**	**1**	**0**
CHDIV		RESERVED					
R/W-0x0		R/W-0x0					

表 7-95. R75 Register Field Descriptions

Bit	Field	Type	Reset	Description
15-11	RESERVED	R/W	0x1	Program 0x1 to this field.

Copyright © 2022 Texas Instruments Incorporated

表 7-95. R75 Register Field Descriptions (continued)

Bit	Field	Type	Reset	Description
10-6	CHDIV	R/W	0x0	Channel divider. 0x0 = Divide by 2 0x1 = Divide by 4 0x2 = Divide by 6 0x3 = Divide by 8 0x4 = Divide by 12 0x5 = Divide by 16 0x6 = Divide by 24 0x7 = Divide by 32 0x8 = Divide by 48 0x9 = Divide by 64 0xA = Divide by 96 0xB = Divide by 128 0xC = Divide by 192
5-0	RESERVED	R/W	0x0	Program 0x0 to this field.

7.6.77 R76 Register (Offset = 0x4C) [reset = 0xC]

R76 is shown in 图 7-86 and described in 表 7-96.

Return to 表 7-18.

图 7-86. R76 Register

15	14	13	12	11	10	9	8	7	6	5	4	3	2	1	0
RESERVED															
R/W-0xC															

表 7-96. R76 Register Field Descriptions

Bit	Field	Type	Reset	Description
15-0	RESERVED	R/W	0xC	Program 0xC to this field.

7.6.78 R77 Register (Offset = 0x4D) [reset = 0x0]

R77 is shown in 图 7-87 and described in 表 7-97.

Return to 表 7-18.

图 7-87. R77 Register

15	14	13	12	11	10	9	8	7	6	5	4	3	2	1	0
RESERVED															
R/W-0x0															

表 7-97. R77 Register Field Descriptions

Bit	Field	Type	Reset	Description
15-0	RESERVED	R/W	0x0	Program 0x0 to this field.

7.6.79 R78 Register (Offset = 0x4E) [reset = 0x64]

R78 is shown in 图 7-88 and described in 表 7-98.

Return to 表 7-18.

图 7-88. R78 Register

15	14	13	12	11	10	9	8	7	6	5	4	3	2	1	0
RESERVED															
R/W-0x64															

表 7-98. R78 Register Field Descriptions

Bit	Field	Type	Reset	Description
15-0	RESERVED	R/W	0x64	Program 0x64 to this field.

7.6.80 R79 Register (Offset = 0x4F) [reset = 0x0]

R79 is shown in 图 7-89 and described in 表 7-99.

Return to 表 7-18.

图 7-89. R79 Register

15	14	13	12	11	10	9	8	7	6	5	4	3	2	1	0
RESERVED															
R/W-0x0															

表 7-99. R79 Register Field Descriptions

Bit	Field	Type	Reset	Description
15-0	RESERVED	R/W	0x0	Program 0x0 to this field.

7.6.81 R80 Register (Offset = 0x50) [reset = 0x0]

R80 is shown in 图 7-90 and described in 表 7-100.

Return to 表 7-18.

图 7-90. R80 Register

15	14	13	12	11	10	9	8	7	6	5	4	3	2	1	0
RESERVED															
R/W-0x0															

表 7-100. R80 Register Field Descriptions

Bit	Field	Type	Reset	Description
15-0	RESERVED	R/W	0x0	Program 0x0 to this field.

7.6.82 R81 Register (Offset = 0x51) [reset = 0x0]

R81 is shown in 图 7-91 and described in 表 7-101.

Return to 表 7-18.

图 7-91. R81 Register

15	14	13	12	11	10	9	8	7	6	5	4	3	2	1	0
RESERVED															
R/W-0x0															

表 7-101. R81 Register Field Descriptions

Bit	Field	Type	Reset	Description
15-0	RESERVED	R/W	0x0	Program 0x0 to this field.

7.6.83 R82 Register (Offset = 0x52) [reset = 0x0]

R82 is shown in 图 7-92 and described in 表 7-102.

Return to 表 7-18.

图 7-92. R82 Register

15	14	13	12	11	10	9	8	7	6	5	4	3	2	1	0
RESERVED															
R/W-0x0															

Copyright © 2022 Texas Instruments Incorporated

表 7-102. R82 Register Field Descriptions

Bit	Field	Type	Reset	Description
15-0	RESERVED	R/W	0x0	Program 0x0 to this field.

7.6.84 R83 Register (Offset = 0x53) [reset = 0x0]

R83 is shown in 图 7-93 and described in 表 7-103.

Return to 表 7-18.

图 7-93. R83 Register

15	14	13	12	11	10	9	8	7	6	5	4	3	2	1	0
RESERVED															
R/W-0x0															

表 7-103. R83 Register Field Descriptions

Bit	Field	Type	Reset	Description
15-0	RESERVED	R/W	0x0	Program 0x0 to this field.

7.6.85 R84 Register (Offset = 0x54) [reset = 0x0]

R84 is shown in 图 7-94 and described in 表 7-104.

Return to 表 7-18.

图 7-94. R84 Register

15	14	13	12	11	10	9	8	7	6	5	4	3	2	1	0
RESERVED															
R/W-0x0															

表 7-104. R84 Register Field Descriptions

Bit	Field	Type	Reset	Description
15-0	RESERVED	R/W	0x0	Program 0x0 to this field.

7.6.86 R85 Register (Offset = 0x55) [reset = 0x0]

R85 is shown in 图 7-95 and described in 表 7-105.

Return to 表 7-18.

图 7-95. R85 Register

15	14	13	12	11	10	9	8	7	6	5	4	3	2	1	0
RESERVED															
R/W-0x0															

表 7-105. R85 Register Field Descriptions

Bit	Field	Type	Reset	Description
15-0	RESERVED	R/W	0x0	Program 0x0 to this field.

7.6.87 R86 Register (Offset = 0x56) [reset = 0x0]

R86 is shown in 图 7-96 and described in 表 7-106.

Return to 表 7-18.

图 7-96. R86 Register

15	14	13	12	11	10	9	8	7	6	5	4	3	2	1	0
RESERVED															
R/W-0x0															

Copyright © 2022 Texas Instruments Incorporated

表 7-106. R86 Register Field Descriptions

Bit	Field	Type	Reset	Description
15-0	RESERVED	R/W	0x0	Program 0x0 to this field.

7.6.88 R87 Register (Offset = 0x57) [reset = 0x0]

R87 is shown in 图 7-97 and described in 表 7-107.

Return to 表 7-18.

图 7-97. R87 Register

15	14	13	12	11	10	9	8	7	6	5	4	3	2	1	0
RESERVED															
R/W-0x0															

表 7-107. R87 Register Field Descriptions

Bit	Field	Type	Reset	Description
15-0	RESERVED	R/W	0x0	Program 0x0 to this field.

7.6.89 R88 Register (Offset = 0x58) [reset = 0x0]

R88 is shown in 图 7-98 and described in 表 7-108.

Return to 表 7-18.

图 7-98. R88 Register

15	14	13	12	11	10	9	8	7	6	5	4	3	2	1	0
RESERVED															
R/W-0x0															

表 7-108. R88 Register Field Descriptions

Bit	Field	Type	Reset	Description
15-0	RESERVED	R/W	0x0	Program 0x0 to this field.

7.6.90 R89 Register (Offset = 0x59) [reset = 0x0]

R89 is shown in 图 7-99 and described in 表 7-109.

Return to 表 7-18.

图 7-99. R89 Register

15	14	13	12	11	10	9	8	7	6	5	4	3	2	1	0
RESERVED															
R/W-0x0															

表 7-109. R89 Register Field Descriptions

Bit	Field	Type	Reset	Description
15-0	RESERVED	R/W	0x0	Program 0x0 to this field.

7.6.91 R90 Register (Offset = 0x5A) [reset = 0x0]

R90 is shown in 图 7-100 and described in 表 7-110.

Return to 表 7-18.

图 7-100. R90 Register

15	14	13	12	11	10	9	8	7	6	5	4	3	2	1	0
RESERVED															
R/W-0x0															

Copyright © 2022 Texas Instruments Incorporated

表 7-110. R90 Register Field Descriptions

Bit	Field	Type	Reset	Description
15-0	RESERVED	R/W	0x0	Program 0x0 to this field.

7.6.92 R91 Register (Offset = 0x5B) [reset = 0x0]

R91 is shown in 图 7-101 and described in 表 7-111.

Return to 表 7-18.

图 7-101. R91 Register

15	14	13	12	11	10	9	8	7	6	5	4	3	2	1	0
RESERVED															
R/W-0x0															

表 7-111. R91 Register Field Descriptions

Bit	Field	Type	Reset	Description
15-0	RESERVED	R/W	0x0	Program 0x0 to this field.

7.6.93 R92 Register (Offset = 0x5C) [reset = 0x0]

R92 is shown in 图 7-102 and described in 表 7-112.

Return to 表 7-18.

图 7-102. R92 Register

15	14	13	12	11	10	9	8	7	6	5	4	3	2	1	0
RESERVED															
R/W-0x0															

表 7-112. R92 Register Field Descriptions

Bit	Field	Type	Reset	Description
15-0	RESERVED	R/W	0x0	Program 0x0 to this field.

7.6.94 R93 Register (Offset = 0x5D) [reset = 0x0]

R93 is shown in 图 7-103 and described in 表 7-113.

Return to 表 7-18.

图 7-103. R93 Register

15	14	13	12	11	10	9	8	7	6	5	4	3	2	1	0
RESERVED															
R/W-0x0															

表 7-113. R93 Register Field Descriptions

Bit	Field	Type	Reset	Description
15-0	RESERVED	R/W	0x0	Program 0x0 to this field.

7.6.95 R94 Register (Offset = 0x5E) [reset = 0x0]

R94 is shown in 图 7-104 and described in 表 7-114.

Return to 表 7-18.

图 7-104. R94 Register

15	14	13	12	11	10	9	8	7	6	5	4	3	2	1	0
RESERVED															
R/W-0x0															

Copyright © 2022 Texas Instruments Incorporated

表 7-114. R94 Register Field Descriptions

Bit	Field	Type	Reset	Description
15-0	RESERVED	R/W	0x0	Program 0x0 to this field.

7.6.96 R95 Register (Offset = 0x5F) [reset = 0x0]

R95 is shown in 图 7-105 and described in 表 7-115.

Return to 表 7-18.

图 7-105. R95 Register

15	14	13	12	11	10	9	8	7	6	5	4	3	2	1	0
RESERVED															
R/W-0x0															

表 7-115. R95 Register Field Descriptions

Bit	Field	Type	Reset	Description
15-0	RESERVED	R/W	0x0	Program 0x0 to this field.

7.6.97 R96 Register (Offset = 0x60) [reset = 0x0]

R96 is shown in 图 7-106 and described in 表 7-116.

Return to 表 7-18.

图 7-106. R96 Register

15	14	13	12	11	10	9	8	7	6	5	4	3	2	1	0
RESERVED															
R/W-0x0															

表 7-116. R96 Register Field Descriptions

Bit	Field	Type	Reset	Description
15-0	RESERVED	R/W	0x0	Program 0x0 to this field.

7.6.98 R97 Register (Offset = 0x61) [reset = 0x0]

R97 is shown in 图 7-107 and described in 表 7-117.

Return to 表 7-18.

图 7-107. R97 Register

15	14	13	12	11	10	9	8	7	6	5	4	3	2	1	0
RESERVED															
R/W-0x0															

表 7-117. R97 Register Field Descriptions

Bit	Field	Type	Reset	Description
15-0	RESERVED	R/W	0x0	Program 0x0 to this field.

7.6.99 R98 Register (Offset = 0x62) [reset = 0x0]

R98 is shown in 图 7-108 and described in 表 7-118.

Return to 表 7-18.

图 7-108. R98 Register

15	14	13	12	11	10	9	8	7	6	5	4	3	2	1	0
RESERVED															
R/W-0x0															

Copyright © 2022 Texas Instruments Incorporated

表 7-118. R98 Register Field Descriptions

Bit	Field	Type	Reset	Description
15-0	RESERVED	R/W	0x0	Program 0x0 to this field.

7.6.100 R99 Register (Offset = 0x63) [reset = 0x0]

R99 is shown in 图 7-109 and described in 表 7-119.

Return to 表 7-18.

图 7-109. R99 Register

15	14	13	12	11	10	9	8	7	6	5	4	3	2	1	0
RESERVED															
R/W-0x0															

表 7-119. R99 Register Field Descriptions

Bit	Field	Type	Reset	Description
15-0	RESERVED	R/W	0x0	Program 0x0 to this field.

7.6.101 R100 Register (Offset = 0x64) [reset = 0x0]

R100 is shown in 图 7-110 and described in 表 7-120.

Return to 表 7-18.

图 7-110. R100 Register

15	14	13	12	11	10	9	8	7	6	5	4	3	2	1	0
RESERVED															
R/W-0x0															

表 7-120. R100 Register Field Descriptions

Bit	Field	Type	Reset	Description
15-0	RESERVED	R/W	0x0	Program 0x0 to this field.

7.6.102 R101 Register (Offset = 0x65) [reset = 0x0]

R101 is shown in 图 7-111 and described in 表 7-121.

Return to 表 7-18.

图 7-111. R101 Register

15	14	13	12	11	10	9	8	7	6	5	4	3	2	1	0
RESERVED															
R/W-0x0															

表 7-121. R101 Register Field Descriptions

Bit	Field	Type	Reset	Description
15-0	RESERVED	R/W	0x0	Program 0x0 to this field.

7.6.103 R102 Register (Offset = 0x66) [reset = 0x0]

R102 is shown in 图 7-112 and described in 表 7-122.

Return to 表 7-18.

图 7-112. R102 Register

15	14	13	12	11	10	9	8	7	6	5	4	3	2	1	0
RESERVED															
R/W-0x0															

Copyright © 2022 Texas Instruments Incorporated

表 7-122. R102 Register Field Descriptions

Bit	Field	Type	Reset	Description
15-0	RESERVED	R/W	0x0	Program 0x0 to this field.

7.6.104 R103 Register (Offset = 0x67) [reset = 0x0]

R103 is shown in 图 7-113 and described in 表 7-123.

Return to 表 7-18.

图 7-113. R103 Register

15	14	13	12	11	10	9	8	7	6	5	4	3	2	1	0
RESERVED															
R/W-0x0															

表 7-123. R103 Register Field Descriptions

Bit	Field	Type	Reset	Description
15-0	RESERVED	R/W	0x0	Program 0x0 to this field.

7.6.105 R104 Register (Offset = 0x68) [reset = 0x0]

R104 is shown in 图 7-114 and described in 表 7-124.

Return to 表 7-18.

图 7-114. R104 Register

15	14	13	12	11	10	9	8	7	6	5	4	3	2	1	0
RESERVED															
R/W-0x0															

表 7-124. R104 Register Field Descriptions

Bit	Field	Type	Reset	Description
15-0	RESERVED	R/W	0x0	Program 0x0 to this field.

7.6.106 R105 Register (Offset = 0x69) [reset = 0x440]

R105 is shown in 图 7-115 and described in 表 7-125.

Return to 表 7-18.

图 7-115. R105 Register

15	14	13	12	11	10	9	8	7	6	5	4	3	2	1	0
RESERVED															
R/W-0x440															

表 7-125. R105 Register Field Descriptions

Bit	Field	Type	Reset	Description
15-0	RESERVED	R/W	0x440	Program 0x0 to this field.

7.6.107 R106 Register (Offset = 0x6A) [reset = 0x7]

R106 is shown in 图 7-116 and described in 表 7-126.

Return to 表 7-18.

图 7-116. R106 Register

15	14	13	12	11	10	9	8	7	6	5	4	3	2	1	0
RESERVED															
R/W-0x7															

Copyright © 2022 Texas Instruments Incorporated

表 7-126. R106 Register Field Descriptions

Bit	Field	Type	Reset	Description
15-0	RESERVED	R/W	0x7	Program 0x0 to this field.

7.6.108 R107 Register (Offset = 0x6B) [reset = 0x0]

R107 is shown in 图 7-117 and described in 表 7-127.

Return to 表 7-18.

图 7-117. R107 Register

15	14	13	12	11	10	9	8	7	6	5	4	3	2	1	0
RESERVED															
R-0x0															

表 7-127. R107 Register Field Descriptions

Bit	Field	Type	Reset	Description
15-0	RESERVED	R	0x0	Not used. Read back only.

7.6.109 R108 Register (Offset = 0x6C) [reset = 0x0]

R108 is shown in 图 7-118 and described in 表 7-128.

Return to 表 7-18.

图 7-118. R108 Register

15	14	13	12	11	10	9	8	7	6	5	4	3	2	1	0
RESERVED															
R-0x0															

表 7-128. R108 Register Field Descriptions

Bit	Field	Type	Reset	Description
15-0	RESERVED	R	0x0	Not used. Read back only.

7.6.110 R109 Register (Offset = 0x6D) [reset = 0x0]

R109 is shown in 图 7-119 and described in 表 7-129.

Return to 表 7-18.

图 7-119. R109 Register

15	14	13	12	11	10	9	8	7	6	5	4	3	2	1	0
RESERVED															
R-0x0															

表 7-129. R109 Register Field Descriptions

Bit	Field	Type	Reset	Description
15-0	RESERVED	R	0x0	Not used. Read back only.

7.6.111 R110 Register (Offset = 0x6E) [reset = 0x0]

R110 is shown in 图 7-120 and described in 表 7-130.

Return to 表 7-18.

图 7-120. R110 Register

15	14	13	12	11	10	9	8
RESERVED					rb_LD_VTUNE		RESERVED
R-0x0					R-0x0		R-0x0

图 7-120. R110 Register (continued)

7	6	5	4	3	2	1	0
rb_VCO_SEL			RESERVED				
R-0x0			R-0x0				

表 7-130. R110 Register Field Descriptions

Bit	Field	Type	Reset	Description
15-11	RESERVED	R	0x0	Not used. Read back only.
10-9	rb_LD_VTUNE	R	0x0	Readback field for the lock detect. 0x0 = Unlocked (f_{VCO} Low) 0x1 = Invalid 0x2 = Locked 0x3 = Unlocked (f_{VCO} High)
8	RESERVED	R	0x0	Not used. Read back only.
7-5	rb_VCO_SEL	R	0x0	Reads back the actual VCO that the calibration has selected. 0x1 = VCO1 0x2 = VCO2 ..... 0x7 = VCO7
4-0	RESERVED	R	0x0	Not used. Read back only.

7.6.112 R111 Register (Offset = 0x6F) [reset = 0x0]

R111 is shown in 图 7-121 and described in 表 7-131.

Return to 表 7-18.

图 7-121. R111 Register

15	14	13	12	11	10	9	8
RESERVED							
R-0x0							
7	6	5	4	3	2	1	0
rb_VCO_CAPCTRL							
R-0x0							

表 7-131. R111 Register Field Descriptions

Bit	Field	Type	Reset	Description
15-8	RESERVED	R	0x0	Not used. Read back only.
7-0	rb_VCO_CAPCTRL	R	0x0	Readback field for the actual VCO_CAPCTRL value that is chosen by the VCO calibration.

7.6.113 R112 Register (Offset = 0x70) [reset = 0x0]

R112 is shown in 图 7-122 and described in 表 7-132.

Return to 表 7-18.

图 7-122. R112 Register

15	14	13	12	11	10	9	8
RESERVED							rb_VCO_DACISET
R-0x0							R-0x0
7	6	5	4	3	2	1	0
rb_VCO_DACISET							
R-0x0							

Copyright © 2022 Texas Instruments Incorporated

表 7-132. R112 Register Field Descriptions

Bit	Field	Type	Reset	Description
15-9	RESERVED	R	0x0	Not used. Read back only.
8-0	rb_VCO_DACISET	R	0x0	Readback field for the actual VCO_DACISET value that is chosen by the VCO calibration.

7.6.114 R113 Register (Offset = 0x71) [reset = 0x0]

R113 is shown in 图 7-123 and described in 表 7-133.

Return to 表 7-18.

图 7-123. R113 Register

15	14	13	12	11	10	9	8	7	6	5	4	3	2	1	0
RESERVED															
R-0x0															

表 7-133. R113 Register Field Descriptions

Bit	Field	Type	Reset	Description
15-0	RESERVED	R	0x0	Not used. Read back only.

7.6.115 R114 Register (Offset = 0x72) [reset = 0x0]

R114 is shown in 图 7-124 and described in 表 7-134.

Return to 表 7-18.

图 7-124. R114 Register

15	14	13	12	11	10	9	8	7	6	5	4	3	2	1	0
RESERVED															
R/W-0x0															

表 7-134. R114 Register Field Descriptions

Bit	Field	Type	Reset	Description
15-0	RESERVED	R/W	0x0	Program 0x0 to this field.

Copyright © 2022 Texas Instruments Incorporated

8 Application and Implementation

备注

以下应用部分中的信息不属于 TI 器件规格的范围，TI 不担保其准确性和完整性。TI 的客 户应负责确定器件是否适用于其应用。客户应验证并测试其设计，以确保系统功能。

8.1 Application Information

8.1.1 OSCIN Configuration

OSCIN supports single or differential-ended clock. There must be a AC-coupling capacitor in series before the device pin. The OSCIN inputs are high-impedance CMOS with internal bias voltage. TI recommends putting termination shunt resistors to terminate the differential traces (if there are 50-Ω characteristic traces, place 50-Ω resistors). The OSCIN_P and OSCIN_N side must be matched in layout. A series AC-coupling capacitors must immediately follow OSCIN pins in the board layout, then the shunt termination resistors to ground must be placed after.

Input clock definitions are shown in 图 8-1.

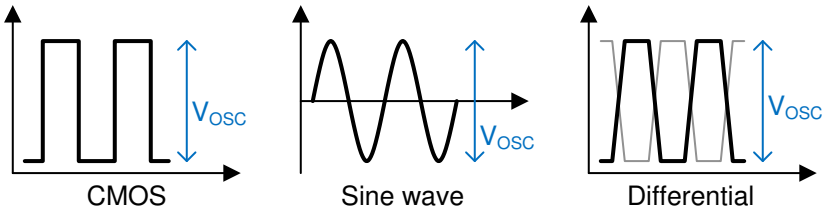

图 8-1. Input Clock Definitions

8.1.2 OSCIN Slew Rate

The slew rate of the OSCIN signal can have an impact on the spurs and phase noise of the LMX2694-SEP if it is too low. In general, the best performance is for a high slew rate, but lower amplitude signal, such as LVDS.

8.1.3 RF Output Buffer Power Control

The OUTA_PWR and OUTB_PWR registers control the amount of drive current for the output. This current creates a voltage across the pullup component and load. TI generally recommends to keep the OUTx_PWR setting at 31 or less, as higher settings consume more current consumption and can also lead to higher output power. Optimal noise floor is typically obtained by setting OUTx_PWR in the range of 15 to 25.

8.1.4 RF Output Buffer Pullup

The choice of output buffer components is very important and can have a profound impact on the output power. The pullup component can be a resistor or inductor or combination thereof. The signal swing is created by a current flowing this pullup, so a higher impedance implies a higher signal swing. However, as this pullup component can be treated as if it is in parallel with the load impedance, there are diminishing returns as the impedance gets much larger than the load impedance. The output impedance of the device varies as a function of frequency and is a complex number, but typically has a magnitude on the order of 100 Ω, but this decreases with frequency.

The output can be used differentially or single-ended. If using single-ended, the pullup is still needed, and user needs to terminate the unused complimentary side such that the impedance as seen from the pin looking out is similar to the pin that is being used. Following are some typical components that might be useful.

表 8-1. Output Pullup Configuration

COMPONENT	VALUE	PART NUMBER
Inductor	1 nH, 13.6 GHz SRF	Toko LL1005-FH1N0S
	3.3 nH, 6.8 GHz SRF	Toko LL1005-FH3N3S
	10 nH, 3.8 GHz SRF	Toko LL1005-FH10NU

Copyright © 2022 Texas Instruments Incorporated

表 8-1. Output Pullup Configuration (continued)

COMPONENT	VALUE	PART NUMBER
Resistor	50 Ω	Vishay FC0402E50R0BST1
Capacitor	Varies with frequency	ATC 520L103KT16T ATC 504L50R0FTNCFT

8.1.4.1 Resistor Pullup

One strategy for the choice of the pullup component is to use a resistor (R). This is typically chosen to be 50-Ω and under the assumption that the part output impedance is high, then the output impedance will theoretically be 50 Ω, regardless of output frequency. As the output impedance of the device is not infinite, the output impedance when the pullup resistor is used will be less than 50 Ω, but will be reasonably close. There will be some drop across the resistor, but this does not seem to have a large impact on signal swing for a 50-Ω resistor provided that OUTx_PWR ≤ 31.

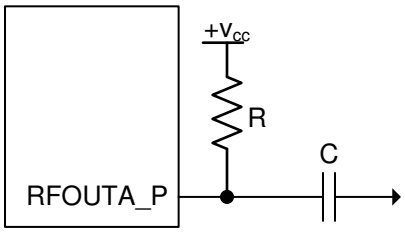

图 8-2. Resistor Pullup

8.1.4.2 Inductor Pullup

Another strategy is to choose an inductor pullup (L). This allows a higher impedance without any concern of creating any DC drop across the component. Ideally, the inductor should be chosen large enough so that the impedance is high relative to the load impedance and also be operating away from its self-resonant frequency. For instance, consider a 3.3-nH pullup inductor with a self-resonant frequency of 7 GHz driving a 25-Ω spectrum analyzer input. This inductor theoretically has j50-Ω input impedance around 2.4 GHz. At this frequency, this in parallel with load is about j35-Ω, which is a 3-dB power reduction. At 1.4 GHz, this inductor has impedance of about 29 Ω. This in parallel with the 50-Ω load has a magnitude of 25 Ω, which is the same result seen with the 50-Ω pullup. The main issue with the inductor pullup is that the impedance does not look nicely matched to the load.

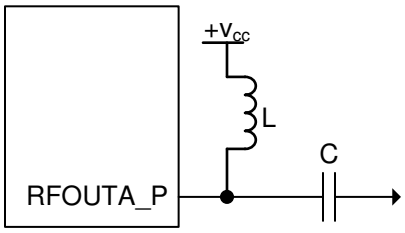

图 8-3. Inductor Pullup

As the output impedance is not so nicely matched, but there is higher output power, it makes sense to use a resistive pad to get the best impedance control. A 6-dB pad (R1 = 18 Ω, R2 = 68 Ω) is likely more attenuation than necessary. A 3-dB or even 1-dB pad might suffice. Two AC-coupling capacitors are required before the pad. In 图 8-4, one of them is placed by the resistor to ground to minimize the number of components in the high frequency path for lower loss.

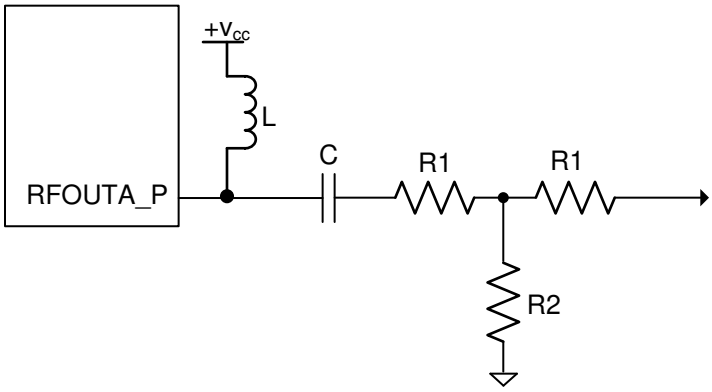

图 8-4. Inductor Pullup With Pad

For the resistive pad, 表 8-2 shows some common values:

表 8-2. Resistive T-Pad Values

ATTENUATION	R1	R2
1 dB	2.7 Ω	420 Ω
2 dB	5.6 Ω	220 Ω
3 dB	6.8 Ω	150 Ω
4 dB	12 Ω	100 Ω
5 dB	15 Ω	82 Ω
6 dB	18 Ω	68 Ω

8.1.4.3 Combination Pullup

The resistor gives a good low frequency response, while the inductor gives a good high frequency response with worse matching. It is desirable to have the impedance of the pullup to be high, but if a resistor is used, then there could be too much DC drop. If an inductor is used, it is hard to find one good at low frequencies and around its self-resonant frequency. One approach to address this is to use a series resistor and inductor followed by resistive pad.

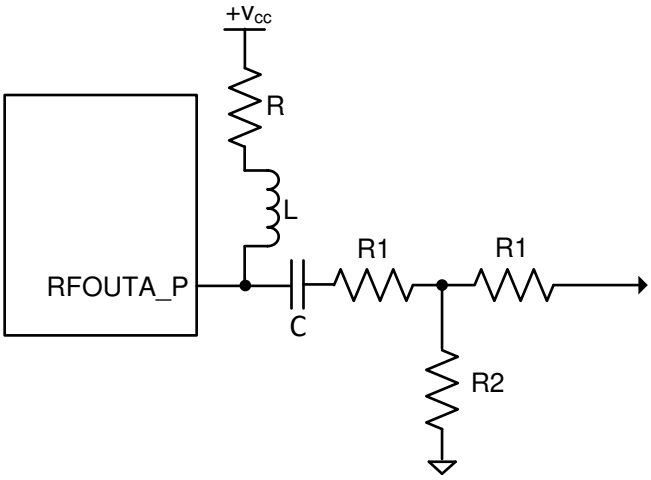

图 8-5. Inductor and Resistor Pullup

8.1.5 RF Output Treatment for the Complimentary Side

Regardless of whether both sides of the differential outputs are used, both sides should see a similar load.

Copyright © 2022 Texas Instruments Incorporated

8.1.5.1 Single-Ended Termination of Unused Output

The unused output should see a roughly the same impedance as looking out of the pin to minimize harmonics and get the best output power. As placement of the pull-up components is critical for the best output power, the routing does not need to be perfectly symmetrical. It makes sense to give highest priority routing to the used output (RFOUTA_P in this case).

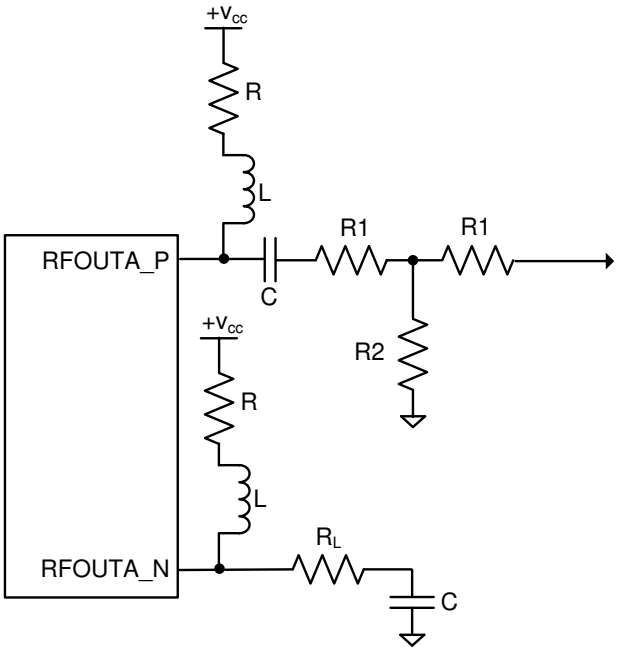

图 8-6. Termination of Unused Output - Single-Ended

8.1.5.2 Differential Termination

For differential termination this can be done by doing the same termination to both sides, or it is also possible to connect the grounds together. This approach can also be accompanied by a differential to single-ended balun for the highest possible output power.

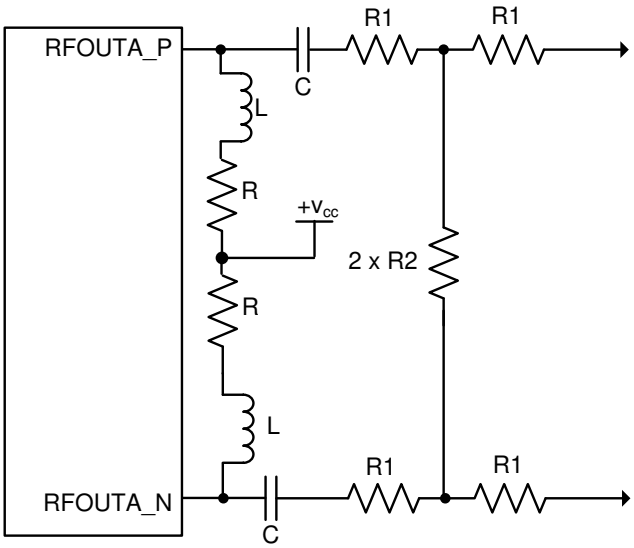

图 8-7. Termination of Unused Output - Differential

8.1.6 External Loop Filter

The LMX2694-SEP requires an external loop filter that is application-specific and can be configured by PLLatinum Sim. For the LMX2694-SEP, it matters what impedance is seen from the VTUNE pin looking outwards. This impedance is dominated by the component C3 for a third order filter or C1 for a second order filter. If there is at least 1.5 nF for the capacitance that is shunt with this pin, the VCO phase noise will be close to the best it can be. If there is less, the VCO phase noise in the 100-kHz to 1-MHz region will degrade. This capacitor should be placed close to the VTUNE pin.

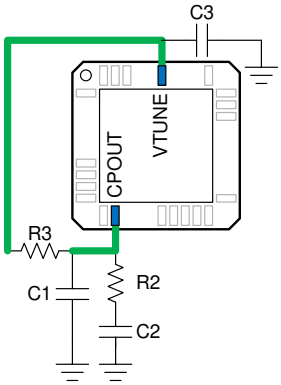

图 8-8. External Loop Filter

8.2 Typical Application

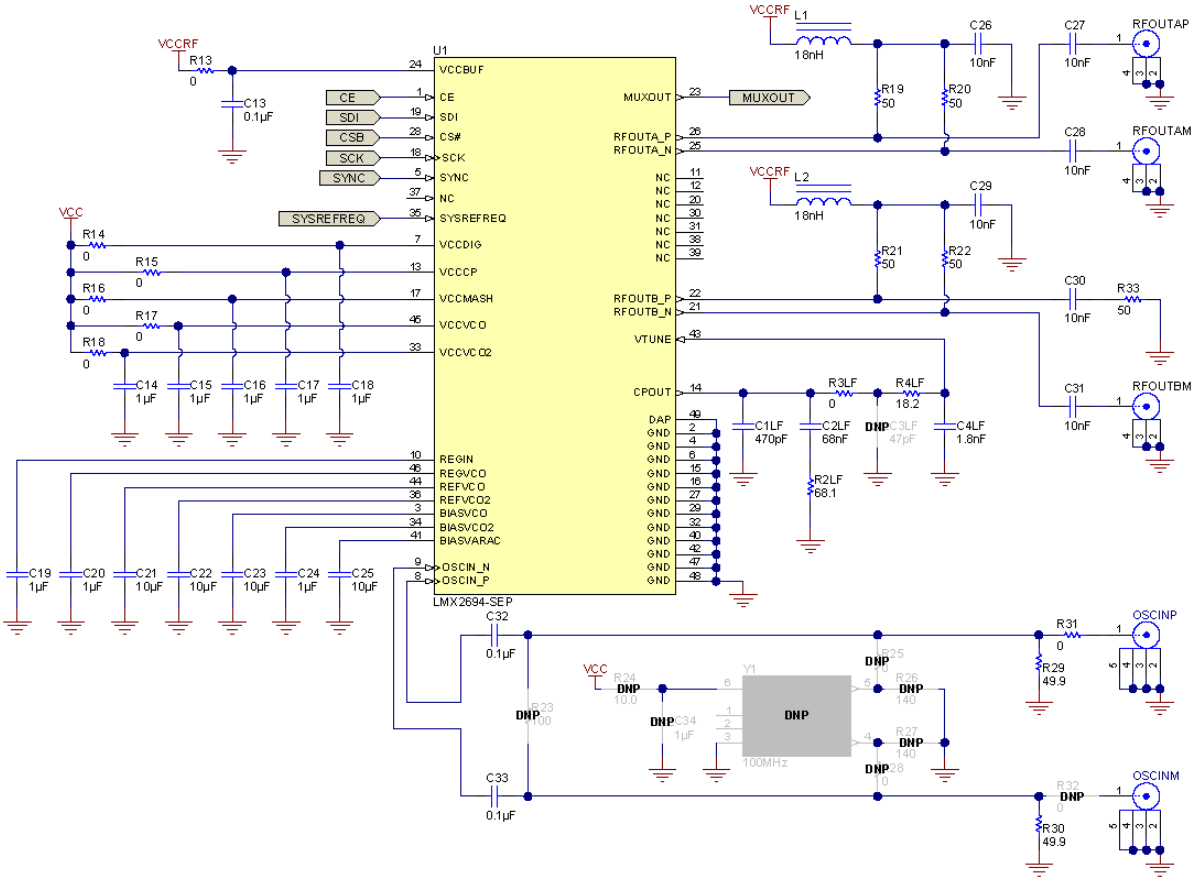

图 8-9. Typical Application Schematic

Copyright © 2022 Texas Instruments Incorporated

8.2.1 Design Requirements

The design of the loop filter is complex and is typically done with software. The PLLatinum Sim software is an excellent resource for doing this and the design is shown in 图 8-10.

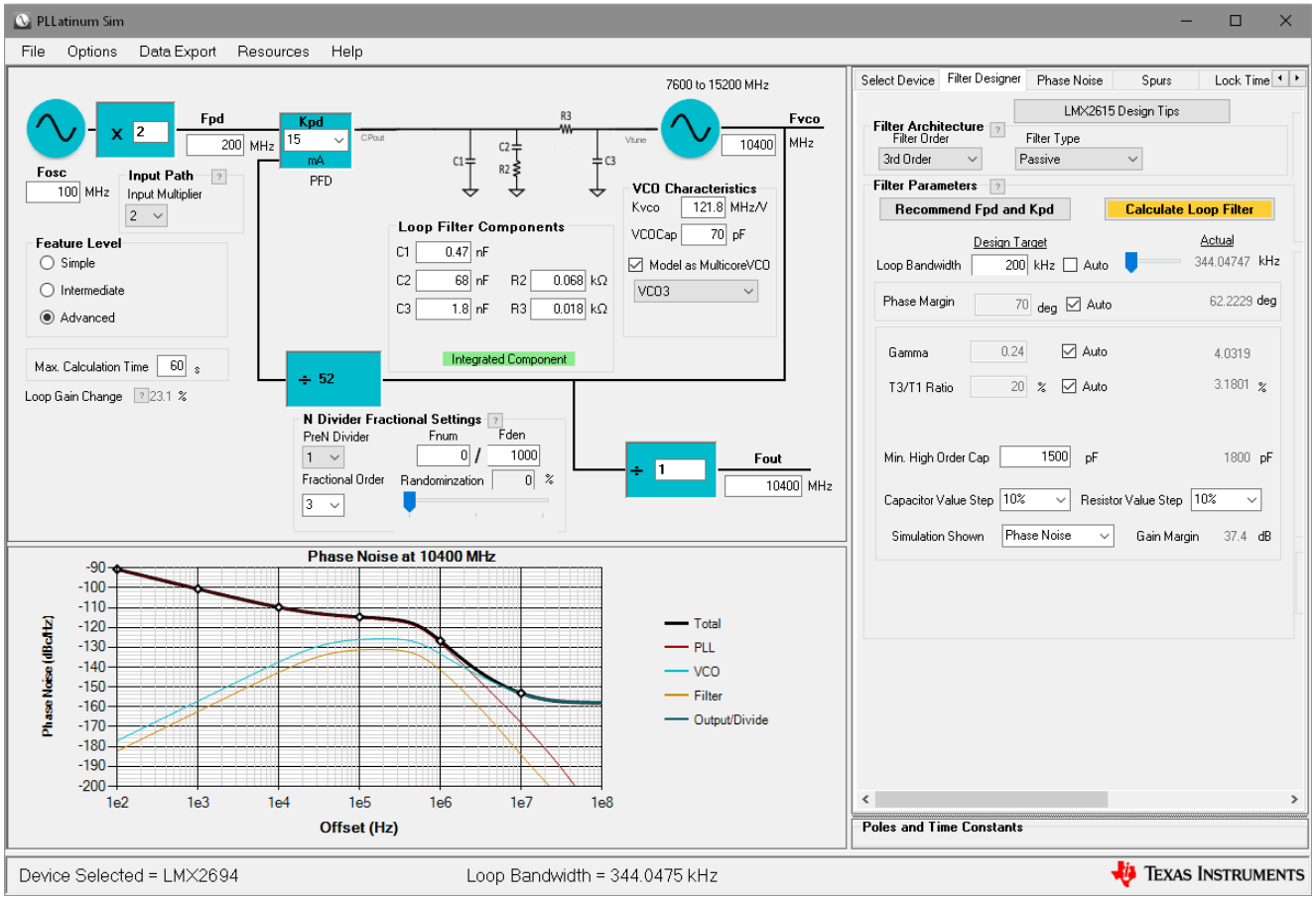

图 8-10. PLLatinum Sim Tool

8.2.2 Detailed Design Procedure

The integration of phase noise over a certain bandwidth (jitter) is an performance specification that translates to signal-to-noise ratio. Phase noise inside the loop bandwidth is dominated by the PLL, while the phase noise outside the loop bandwidth is dominated by the VCO. Generally, jitter is lowest if loop bandwidth is designed to the point where the two intersect. A higher phase margin loop filter design has less peaking at the loop bandwidth and thus lower jitter. The tradeoff with this is that longer lock times and spurs must be considered in design as well.

8.2.3 Application Curve

Using the settings described, the performance measured using a clean 100-MHz input reference is shown. Note the loop bandwidth is about 350 kHz, as simulations predict.

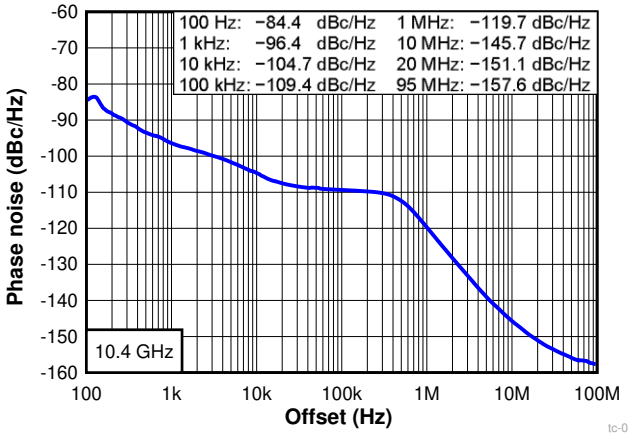

图 8-11. Results for Loop Filter Design

9 Power Supply Recommendations

TI recommends placement of bypass capacitors close to the pins. Consult the EVM instructions for layout examples. If fractional spurs are a large concern, using a ferrite bead to each of these power supply pins can reduce spurs to a small degree. This device has integrated LDOs, which improves the resistance to power supply noise. However, the pullup components on the RFOUTA and RFOUTB pins on the outputs have a direct connection to the power supply, so take extra care to ensure that the voltage is clean for these pins.

Copyright © 2022 Texas Instruments Incorporated

10 Layout

10.1 Layout Guidelines

In general, the layout guidelines are similar to most other PLL devices. Here are some specific guidelines.

- GND pins may be routed on the package back to the DAP.
- The OSCIN pins, these are internally biased and must be AC coupled.
- If not used, the SYSREFREQ may be grounded to the DAP.
- For optimal VCO phase noise in the 200 kHz to 1 MHz range, it is ideal that the capacitor closest to the VTUNE pin be at least 3.3 nF. As requiring this larger capacitor may restrict the loop bandwidth, this value can be reduced (to say 1.5 nF) at the expense of VCO phase noise.
- For the outputs, keep the pullup component as close as possible to the pin and use the same component on each side of the differential pair.
- If a single-ended output is needed, the other side must have the same loading and pullup. However, the routing for the used side can be optimized by routing the complementary side through a via to the other side of the board. On this side, use the same pullup and make the load look equivalent to the side that is used.
- Ensure DAP on device is well-grounded with many vias, preferably copper filled.
- Have a thermal pad that is as large as the LMX2694-SEP exposed pad. Add vias to the thermal pad to maximize thermal performance.
- Use a low loss dielectric material, such as Rogers 4350B, for optimal output power.

10.2 Layout Example

In addition to the layout guidelines already given, here are some additional comments for this specific layout example.

- The most critical part of the layout that the placement of the pull-up components (R19, R20, R21, and R22) is close to the pin for optimal output power.
- For this layout, all of the loop filter (C1LF, C2LF, C3LF, C4LF, R2LF, R3LF, and R4LF) are on the back side of the board. C4LF is located right underneath to the VTUNE pin. In the event that this C4LF capacitor would be open, it is recommended to move one of loop capacitors in this spot. For instance, if a 3rd order loop filter was used, technically C3LF would be non-zero and C4LF would be open. However, for this layout example that is designed for a 4th order loop filter, it would be optimal to make R3LF = 0 Ω, C3LF = open, and C4LF to be whatever C3LF would have been.

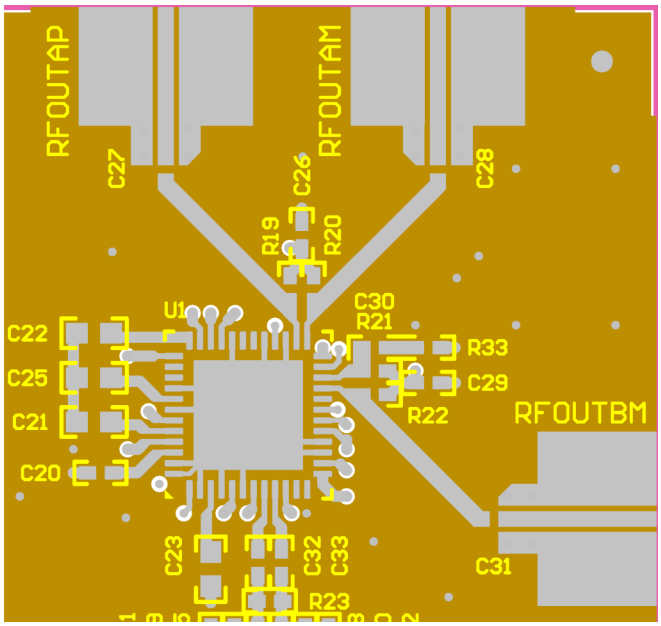

图 10-1. Layout Example

11 Device and Documentation Support

11.1 Device Support

11.1.1 Development Support

Texas Instruments has several software tools to aid in the development at www.ti.com. Among these tools are:

- PLLatinum Sim program for designing loop filters, simulating phase noise and spurs.
- TICS Pro software to understand how to program the device and for programming the EVM board.

11.2 Documentation Support

11.2.1 Related Documentation

For related documentation see the following:

- AN-1879 Fractional N Frequency Synthesis (SNAA062)

11.3 接收文档更新通知

要接收文档更新通知，请导航至 ti.com 上的器件产品文件夹。点击*订阅更新* 进行注册，即可每周接收产品信息更改摘要。有关更改的详细信息，请查看任何已修订文档中包含的修订历史记录。

11.4 支持资源

TI E2E™ 支持论坛是工程师的重要参考资料，可直接从专家获得快速、经过验证的解答和设计帮助。搜索现有解答或提出自己的问题可获得所需的快速设计帮助。

链接的内容由各个贡献者“按原样”提供。这些内容并不构成 TI 技术规范，并且不一定反映 TI 的观点；请参阅 TI 的《使用条款》。

11.5 Trademarks

PLLatinum™ is a trademark of Texas Instruments.
TI E2E™ is a trademark of Texas Instruments.
所有商标均为其各自所有者的财产。

11.6 Electrostatic Discharge Caution

This integrated circuit can be damaged by ESD. Texas Instruments recommends that all integrated circuits be handled with appropriate precautions. Failure to observe proper handling and installation procedures can cause damage.

ESD damage can range from subtle performance degradation to complete device failure. Precision integrated circuits may be more susceptible to damage because very small parametric changes could cause the device not to meet its published specifications.

11.7 术语表

TI 术语表	本术语表列出并解释了术语、首字母缩略词和定义。

12 Mechanical, Packaging, and Orderable Information

The following pages include mechanical, packaging, and orderable information. This information is the most current data available for the designated devices. This data is subject to change without notice and revision of this document. For browser-based versions of this data sheet, refer to the left-hand navigation.

Copyright © 2022 Texas Instruments Incorporated

PACKAGE OUTLINE

RTC0048G

VQFNP - 0.9 mm max height

PLASTIC QUAD FLATPACK - NO LEAD

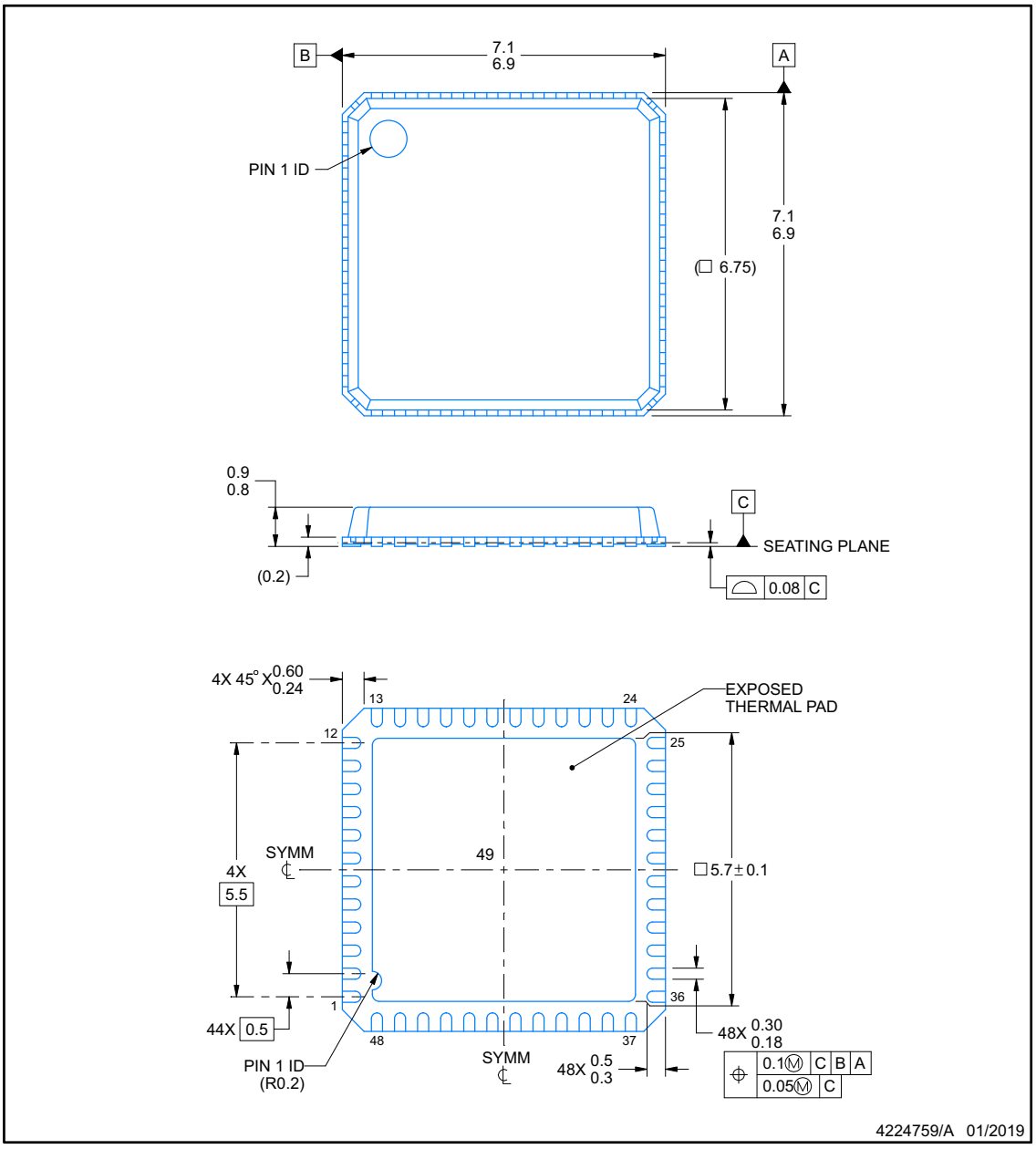

NOTES:

1. All linear dimensions are in millimeters. Any dimensions in parenthesis are for reference only. Dimensioning and tolerancing per ASME Y14.5M.
2. This drawing is subject to change without notice.
3. The package thermal pad must be soldered to the printed circuit board for thermal and mechanical performance.

Copyright © 2022 Texas Instruments Incorporated

EXAMPLE BOARD LAYOUT

RTC0048G

VQFNP - 0.9 mm max height

PLASTIC QUAD FLATPACK - NO LEAD

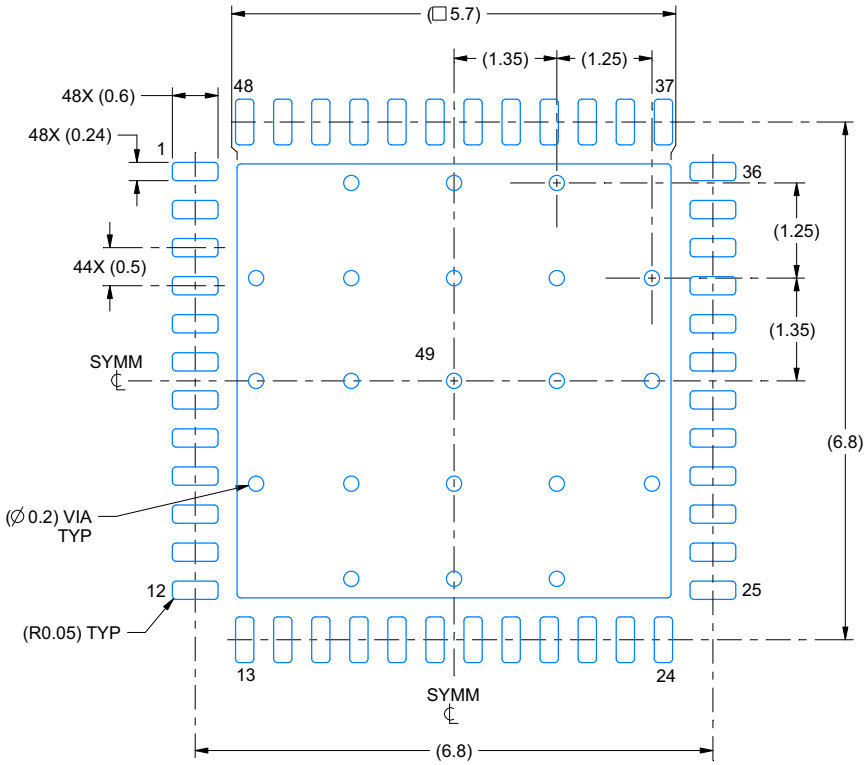

LAND PATTERN EXAMPLE
EXPOSED METAL SHOWN
SCALE:12X

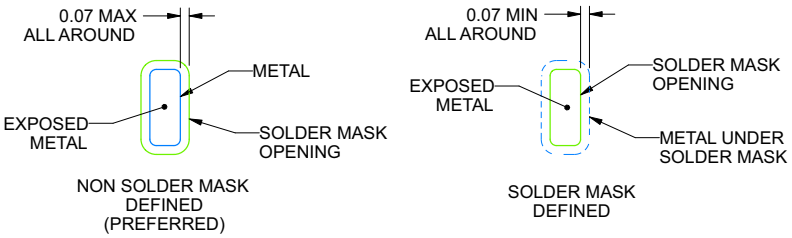

SOLDER MASK DETAILS

4224759/A 01/2019

NOTES: (continued)

4. This package is designed to be soldered to a thermal pad on the board. For more information, see Texas Instruments literature number SLUA271 (www.ti.com/lit/slua271).
5. Vias are optional depending on application, refer to device data sheet. If any vias are implemented, refer to their locations shown on this view. It is recommended that vias under paste be filled, plugged or tented.

Copyright © 2022 Texas Instruments Incorporated

EXAMPLE STENCIL DESIGN

RTC0048G **VQFNP - 0.9 mm max height**

PLASTIC QUAD FLATPACK - NO LEAD

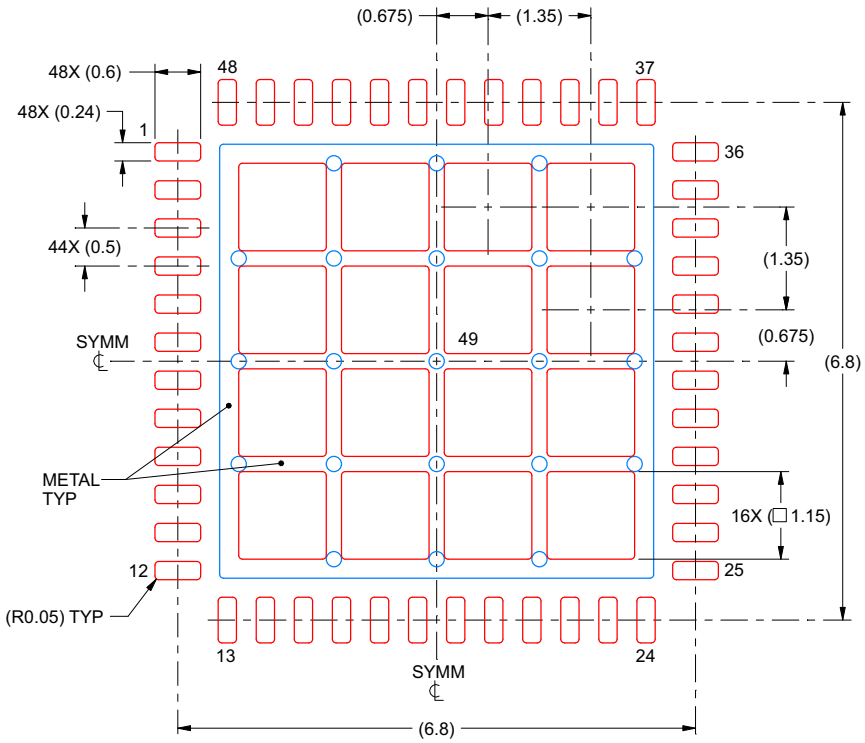

SOLDER PASTE EXAMPLE
BASED ON 0.125 mm THICK STENCIL

EXPOSED PAD 49:
65% PRINTED SOLDER COVERAGE BY AREA UNDER PACKAGE
SCALE:12X

4224759/A 01/2019

NOTES: (continued)

6. Laser cutting apertures with trapezoidal walls and rounded corners may offer better paste release. IPC-7525 may have alternate design recommendations.

Copyright © 2022 Texas Instruments Incorporated

PACKAGING INFORMATION

Orderable part number	Status (1)	Material type (2)	Package | Pins	Package qty | Carrier	RoHS (3)	Lead finish/ Ball material (4)	MSL rating/ Peak reflow (5)	Op temp (°C)	Part marking (6)
LMX2694SRTCTSEP	Active	Production	VQFN (RTC) | 48	260 | SMALL T&R	Yes	Call TI | Nipdauag	Level-3-260C-168 HR	-55 to 125	LMX2694 SEP

(1) **Status:** For more details on status, see our product life cycle.

(2) **Material type:** When designated, preproduction parts are prototypes/experimental devices, and are not yet approved or released for full production. Testing and final process, including without limitation quality assurance, reliability performance testing, and/or process qualification, may not yet be complete, and this item is subject to further changes or possible discontinuation. If available for ordering, purchases will be subject to an additional waiver at checkout, and are intended for early internal evaluation purposes only. These items are sold without warranties of any kind.

(3) **RoHS values:** Yes, No, RoHS Exempt. See the TI RoHS Statement for additional information and value definition.

(4) **Lead finish/Ball material:** Parts may have multiple material finish options. Finish options are separated by a vertical ruled line. Lead finish/Ball material values may wrap to two lines if the finish value exceeds the maximum column width.

(5) **MSL rating/Peak reflow:** The moisture sensitivity level ratings and peak solder (reflow) temperatures. In the event that a part has multiple moisture sensitivity ratings, only the lowest level per JEDEC standards is shown. Refer to the shipping label for the actual reflow temperature that will be used to mount the part to the printed circuit board.

(6) **Part marking:** There may be an additional marking, which relates to the logo, the lot trace code information, or the environmental category of the part.

Multiple part markings will be inside parentheses. Only one part marking contained in parentheses and separated by a "~" will appear on a part. If a line is indented then it is a continuation of the previous line and the two combined represent the entire part marking for that device.

Important Information and Disclaimer: The information provided on this page represents TI's knowledge and belief as of the date that it is provided. TI bases its knowledge and belief on information provided by third parties, and makes no representation or warranty as to the accuracy of such information. Efforts are underway to better integrate information from third parties. TI has taken and continues to take reasonable steps to provide representative and accurate information but may not have conducted destructive testing or chemical analysis on incoming materials and chemicals. TI and TI suppliers consider certain information to be proprietary, and thus CAS numbers and other limited information may not be available for release.

In no event shall TI's liability arising out of such information exceed the total purchase price of the TI part(s) at issue in this document sold by TI to Customer on an annual basis.

OTHER QUALIFIED VERSIONS OF LMX2694-SEP :

- Enhanced Product : LMX2694-EP

NOTE: Qualified Version Definitions:

- Enhanced Product - Supports Defense, Aerospace and Medical Applications

TAPE AND REEL INFORMATION

REEL DIMENSIONS

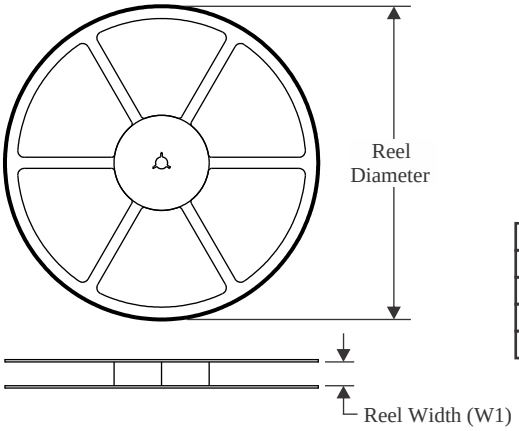

TAPE DIMENSIONS

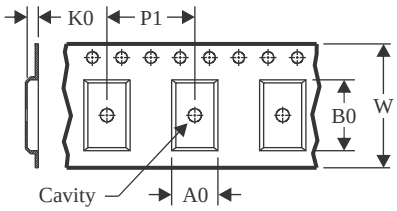

A0	Dimension designed to accommodate the component width
B0	Dimension designed to accommodate the component length
K0	Dimension designed to accommodate the component thickness
W	Overall width of the carrier tape
P1	Pitch between successive cavity centers

QUADRANT ASSIGNMENTS FOR PIN 1 ORIENTATION IN TAPE

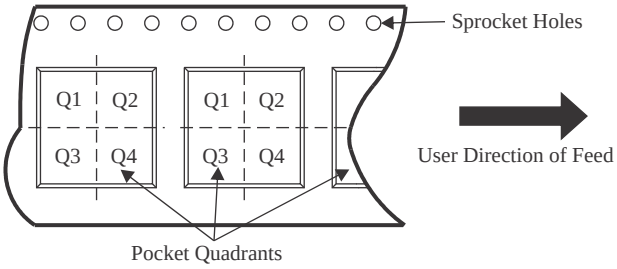

*All dimensions are nominal

Device	Package Type	Package Drawing	Pins	SPQ	Reel Diameter (mm)	Reel Width W1 (mm)	A0 (mm)	B0 (mm)	K0 (mm)	P1 (mm)	W (mm)	Pin1 Quadrant
LMX2694SRTCTSEP	VQFN	RTC	48	260	180.0	16.4	7.3	7.3	1.1	12.0	16.0	Q2

TAPE AND REEL BOX DIMENSIONS

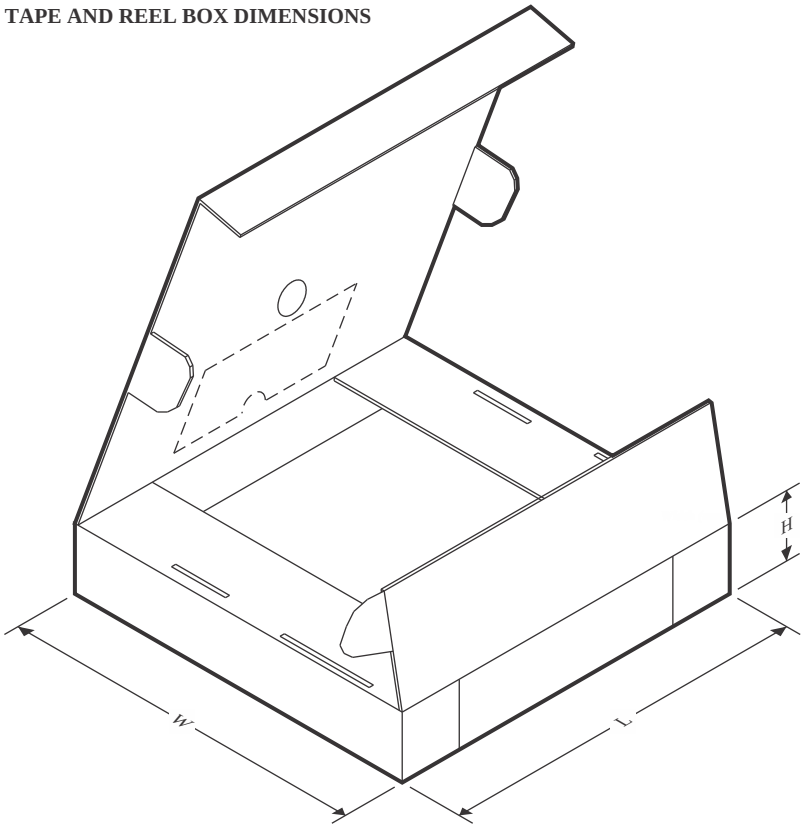

*All dimensions are nominal

Device	Package Type	Package Drawing	Pins	SPQ	Length (mm)	Width (mm)	Height (mm)
LMX2694SRTCTSEP	VQFN	RTC	48	260	210.0	185.0	35.0

GENERIC PACKAGE VIEW

RTC 48

VQFNP - 0.9 mm max height

7 x 7, 0.5 mm pitch

PLASTIC QUAD FLATPACK - NO LEAD

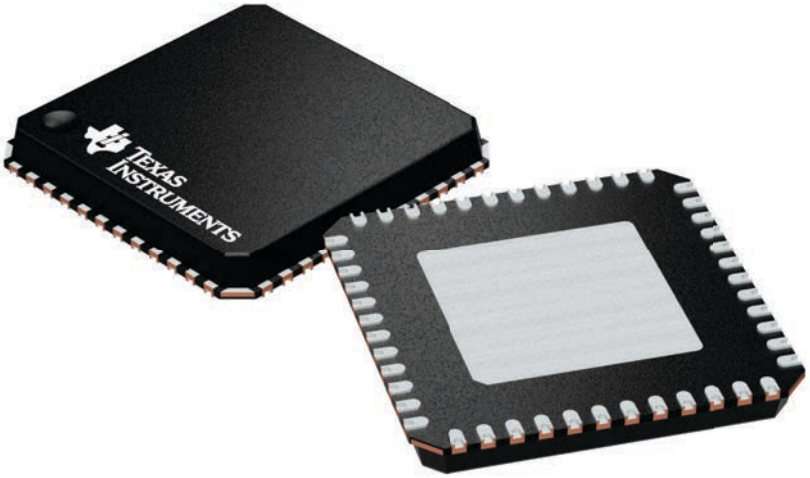

Images above are just a representation of the package family, actual package may vary.
Refer to the product data sheet for package details.

4224601/A

RTC0048G

PACKAGE OUTLINE

VQFNP - 0.9 mm max height

PLASTIC QUAD FLATPACK - NO LEAD

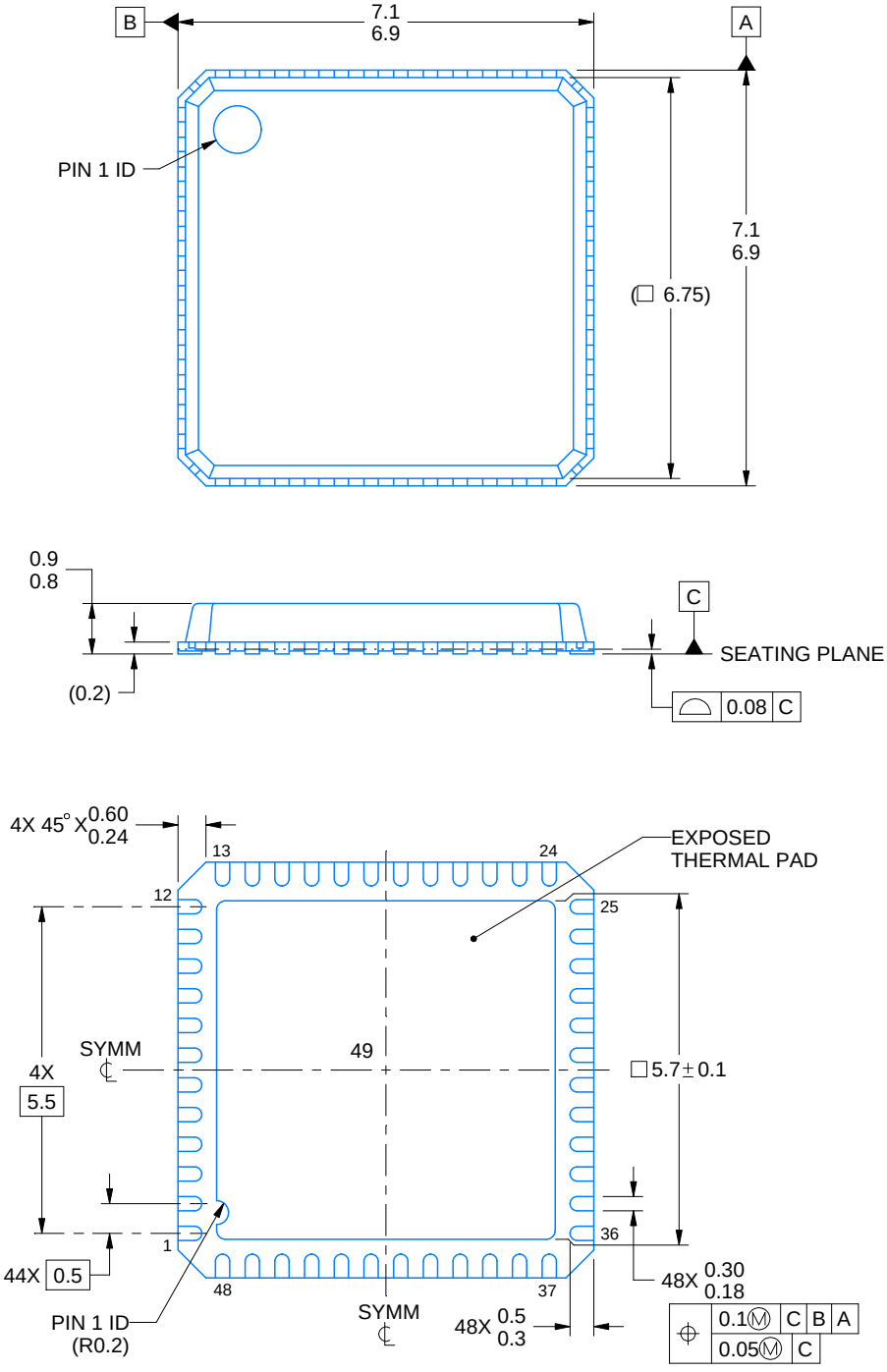

4224759/A 01/2019

NOTES:

1. All linear dimensions are in millimeters. Any dimensions in parenthesis are for reference only. Dimensioning and tolerancing per ASME Y14.5M.
2. This drawing is subject to change without notice.
3. The package thermal pad must be soldered to the printed circuit board for thermal and mechanical performance.

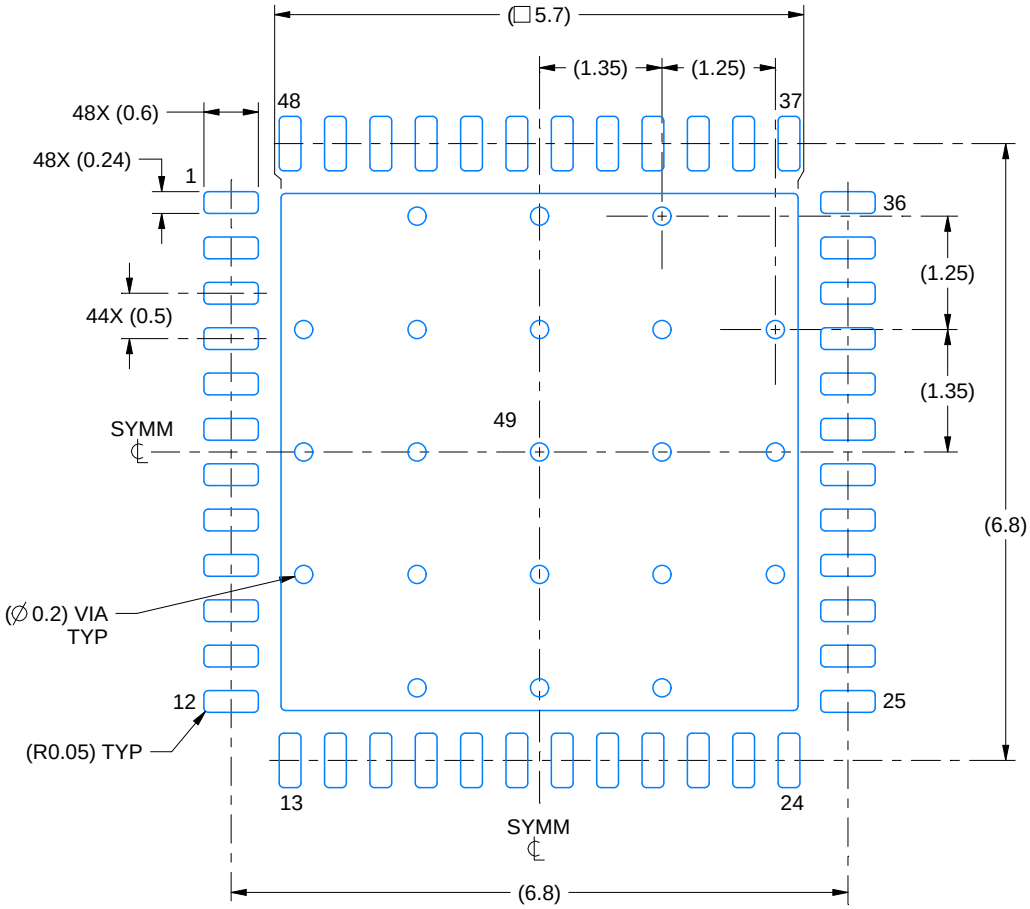

LAND PATTERN EXAMPLE
EXPOSED METAL SHOWN
SCALE:12X

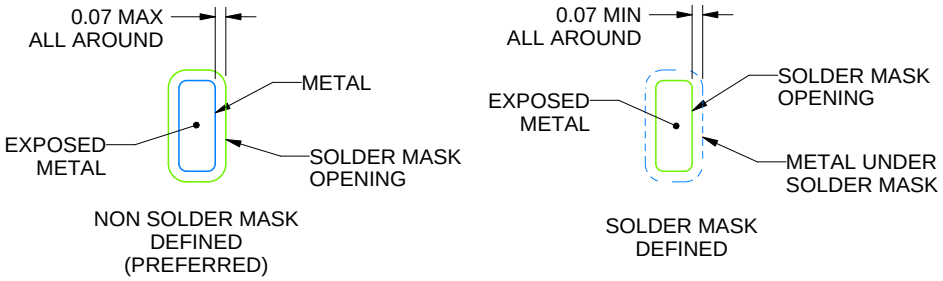

SOLDER MASK DETAILS

4224759/A 01/2019

NOTES: (continued)

4. This package is designed to be soldered to a thermal pad on the board. For more information, see Texas Instruments literature number SLUA271 (www.ti.com/lit/slua271).
5. Vias are optional depending on application, refer to device data sheet. If any vias are implemented, refer to their locations shown on this view. It is recommended that vias under paste be filled, plugged or tented.

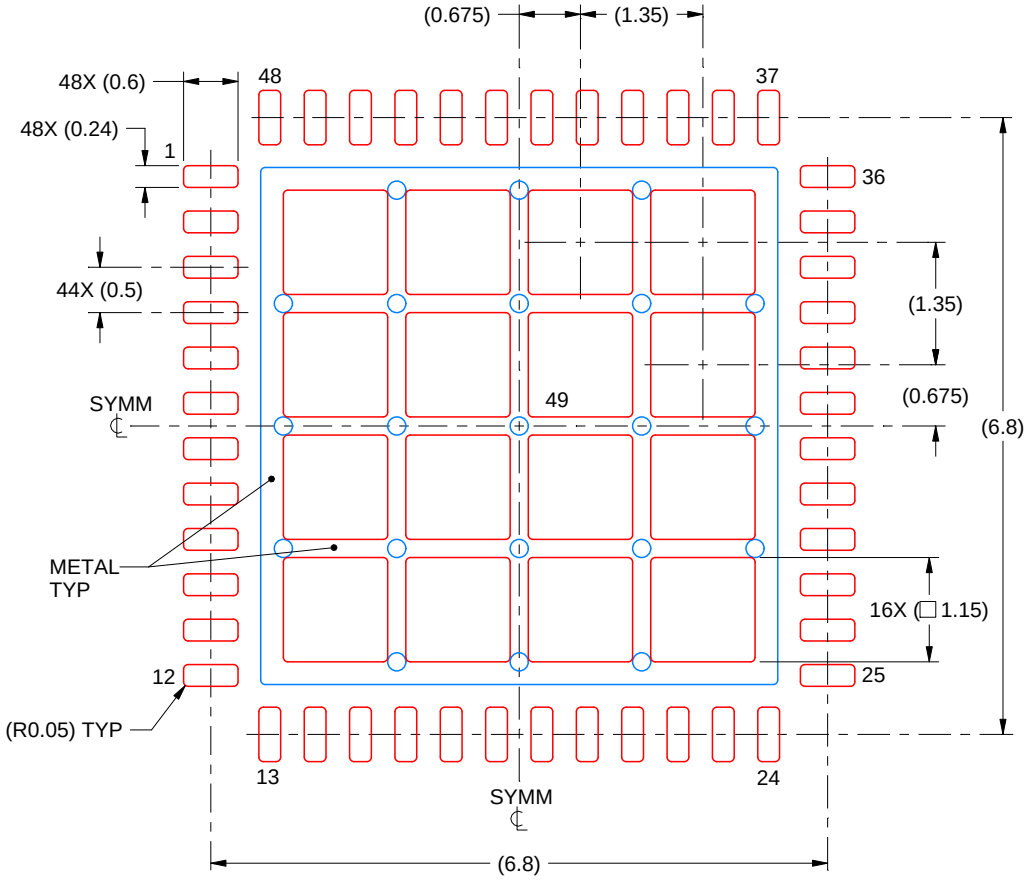

SOLDER PASTE EXAMPLE
BASED ON 0.125 mm THICK STENCIL

EXPOSED PAD 49:
65% PRINTED SOLDER COVERAGE BY AREA UNDER PACKAGE
SCALE:12X

4224759/A 01/2019

NOTES: (continued)

6. Laser cutting apertures with trapezoidal walls and rounded corners may offer better paste release. IPC-7525 may have alternate design recommendations.

重要通知和免责声明

TI“按原样”提供技术和可靠性数据（包括数据表）、设计资源（包括参考设计）、应用或其他设计建议、网络工具、安全信息和其他资源，不保证没有瑕疵且不做出任何明示或暗示的担保，包括但不限于对适销性、某特定用途方面的适用性或不侵犯任何第三方知识产权的暗示担保。

这些资源可供使用 TI 产品进行设计的熟练开发人员使用。您将自行承担以下全部责任：(1) 针对您的应用选择合适的 TI 产品，(2) 设计、验证并测试您的应用，(3) 确保您的应用满足相应标准以及任何其他功能安全、信息安全、监管或其他要求。

这些资源如有变更，恕不另行通知。TI 授权您仅可将这些资源用于研发本资源所述的 TI 产品的相关应用。 严禁以其他方式对这些资源进行复制或展示。您无权使用任何其他 TI 知识产权或任何第三方知识产权。您应全额赔偿因在这些资源的使用中对 TI 及其代表造成的任何索赔、损害、成本、损失和债务，TI 对此概不负责。

TI 提供的产品受 TI 的销售条款或 ti.com 上其他适用条款/TI 产品随附的其他适用条款的约束。TI 提供这些资源并不会扩展或以其他方式更改 TI 针对 TI 产品发布的适用的担保或担保免责声明。

TI 反对并拒绝您可能提出的任何其他或不同的条款。

邮寄地址：Texas Instruments, Post Office Box 655303, Dallas, Texas 75265
版权所有 © 2025，德州仪器 (TI) 公司