LMP9007x/LMP90080 传感器 AFE 系统：具有真正连续后台校准功能的多通道低功耗 16 位传感器 AFE

1 特性

- 16 位低功耗 Σ-Δ 模数转换器 (ADC)
- 所有增益上的真连续背景校准
- 使用期望值编程进行适当的系统校准
- 低噪声可编程增益 (1x - 128x)
- 连续后台开路/短路和范围外传感器诊断
- 单周期稳定的 8 个输出数据速率 (ODR)
- 源自 100μA 至 1000 μA 的 2 个已匹配激励电流 (LMP90080/LMP90078)
- 4 个差分输入/7 个单端输入 (LMP90080/LMP90079)
- 2 个差分输入/4 个单端输入 (LMP90078/LMP90077)
- 7 个通用输入/输出引脚
- 用于实现低偏移的斩波稳定缓冲器
- 支持循环冗余码校验 (CRC) 数据链接误差检测的 SPI 4/3 线制接口
- ODR ≤ 13.42SPS 时的 50Hz 至 60Hz 线路扰动抑制
- 每通道独立增益和 ODR 选择
- 由 WEBENCH®传感器 AFE 设计工具提供支持
- 自动通道排序器
- 主要技术规范
  - 有效位数 (ENOB)/NFR：高达 16/16 位
  - 偏移误差（典型值）：8.4nV
  - 增益误差（典型值）：7ppm
  - 总体噪声：< 10μV-rms
  - 积分非线性（INL 最大值）：±1 最低有效位 (LSB)
  - 输出数据速率 (ODR)：1.6775 至 214.65SPS
  - 模拟电压 V_A：2.85V 至 5.5V
  - 工作温度范围：–40°C 至 125°C
  - 封装：28 引脚带外露垫封装

2 应用

- 温度和压力发送器
- 应变仪接口
- 工业过程控制

3 说明

LLMP9007x 和 LMP90080 是高度集成的多通道低功耗 16 位传感器模拟前端 (AFE)。此器件特有一个精密 16 位三角积分模数转换器 (ADC)，此转换器具有一个低噪声可编程增益放大器和一个完全差分高阻抗模拟输入复用器。一个真连续后台校准特性可在所有增益和输出数据速率上实现校准而又不会中断信号路径。后台校准特性在温度和时间范围内从根本上消除了增益和偏移误差，从而在不损失速度和功耗的情况下提供测量精度。

器件信息(1)

器件型号	封装	封装尺寸（标称值）
LMP90077	HTSSOP (28)	9.70mm x 4.40mm
LMP90078		
LMP90079		
LMP90080		

(1) 如需了解所有可用封装，请参见数据表末尾的可订购产品附录。

典型传感器应用

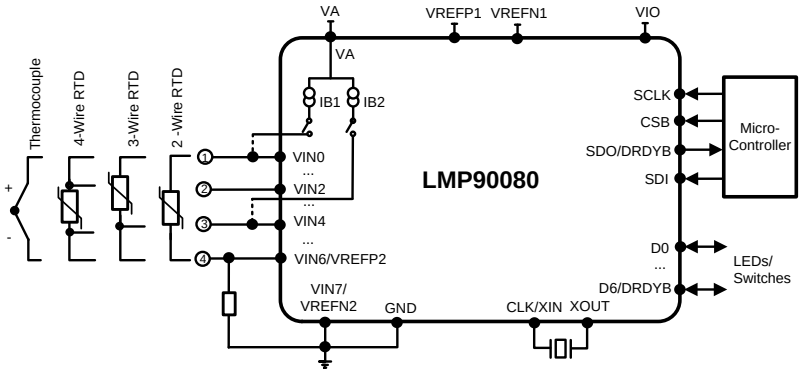

LM90xxx 16-bit Sensor AFE Family of Products		
Product	Channel Configuration	Current Sources
LMP90080	4 Differential/7 Single-Ended	Yes
LMP90079	4 Differential/7 Single-Ended	No
LMP90078	2 Differential/4 Single-Ended	Yes
LMP90077	2 Differential/4 Single-Ended	No

An IMPORTANT NOTICE at the end of this data sheet addresses availability, warranty, changes, use in safety-critical applications, intellectual property matters and other important disclaimers. PRODUCTION DATA.

目录

1 特性 ... 1
2 应用 ... 1
3 说明 ... 1
4 修订历史记录 ... 2
5 说明 （续） ... 3
6 **Device Comparison Table** ... 3
7 **Pin Configuration and Functions** ... 4
8 **Specifications** ... 5
8.1 Absolute Maximum Ratings ... 5
8.2 ESD Ratings ... 5
8.3 Recommended Operating Conditions ... 6
8.4 Thermal Information ... 6
8.5 Electrical Characteristics ... 6
8.6 Timing Requirements ... 11
8.7 Timing Requirements - CSB Timing ... 11
8.8 Timing Requirements - SCLK and SDI Timing ... 11
8.9 Timing Requirements - SDO Timing With DOD1 ... 11
8.10 Timing Requirements - SDO Timing with DOD2 ... 11
8.11 Timing Requirements - SDO and DRDYB Timing 11
8.12 Typical Characteristics ... 15
9 **Detailed Description** ... 20
9.1 Overview ... 20
9.2 Functional Block Diagram ... 20
9.3 Feature Description ... 21
9.4 Device Functional Modes ... 29
9.5 Programming ... 32
9.6 Register Maps ... 43
10 **Application and Implementation** ... 53
10.1 Application Information ... 53
10.2 Typical Applications ... 54
11 **Power Supply Recommendations** ... 60
12 **Layout** ... 60
12.1 Layout Guidelines ... 60
12.2 Layout Example ... 60
13 器件和文档支持 ... 61
13.1 器件支持 ... 61
13.2 相关链接 ... 61
13.3 社区资源 ... 61
13.4 商标 ... 62
13.5 静电放电警告 ... 62
13.6 Glossary ... 62
14 机械、封装和可订购信息 ... 62

4 修订历史记录

Changes from Revision G (January 2015) to Revision H — **Page**

- Changed Buffer Enable/Disable. ... 48
- Changed BUF_EN = 1 to 0. ... 53

Changes from Revision F (March 2013) to Revision G — **Page**

- 已添加 *引脚配置和功能部分*，*ESD 额定值表*，*特性 描述* 部分，*器件功能模式*，*应用和实施部分*，*电源相关建议部分*，*布局部分*，*器件和文档支持部分以及机械、封装和可订购信息部分* ... 1
- Added footnote to INL, GE, and Crosstalk specifications. ... 6
- Changed t_{DOD1} specification. ... 11
- Deleted CH_STS and ADC_DOUTM from Compute the CRC... sentence. ... 38
- Added sentence to the end of the RESET and RESTART section. ... 39

Changes from Revision E (March 2013) to Revision F — **Page**

- Changed layout of National Data Sheet to TI format ... 52

版权 © 2011–2016, Texas Instruments Incorporated

5 说明 （续）

LMP9007x 和 LMP90080 的另一项功能是连续后台传感器诊断，无需用户介入即可检测开路和短路状态以及超出范围的信号，能够强化系统稳定性。

两组独立外部基准引脚可实现多比率测量。此外，LMP90080/LMP90078 还提供两个匹配的可编程电流源，用于为阻性温度检测器和桥式传感器等外部传感器供电。此外，两种器件还提供了 7 个通用输入/输出 (GPIO) 引脚与外部发光二极管 (LED) 和开关进行对接，以简化对于绝缘栅的控制。

凭借这一系列 功能， LMP90080/LMP90079/LMP90078/LMP90077 完整模拟前端能够应用于精密的低功耗传感器应用 例如温度计、压力计、应力计和工业过程控制。LMP90080/LMP90079/LMP90078/LMP90077 采用 28 引脚外露焊盘封装，均可在 -40°C 至 +125°C 的扩展温度范围内运行。

6 Device Comparison Table

LM90xxx 16-BIT SENOR AFE FAMILY OF PRODUCTS		
DEVICE NUMBER	**CHANNEL CONFIGURATION**	**CURRENT SOURCES**
LMP90080	4 Differential/7 Single-Ended	Yes
LMP90079		
LMP90078	2 Differential/4 Single-Ended	
LMP90077		

Copyright © 2011–2016, Texas Instruments Incorporated

7 Pin Configuration and Functions

PWP Package
28-Pin HTSSOP
Top View

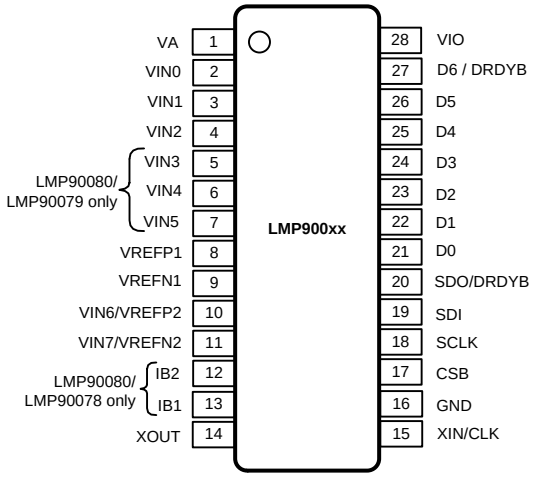

Pin Functions

PIN					TYPE	FUNCTION
NAME	LMP90080 PIN NO.	LMP90079 PIN NO.	LMP90078 PIN NO.	LMP90077 PIN NO.		
VA	1	1	1	1	Analog Supply	Analog power supply pin
VIN0	2	2	2	2	Analog Input	Analog input pins
VIN1	3	3	3	3		
VIN2	4	4	4	4		
VIN3	5	5	—	—	Analog Input	Analog input pins
VIN4	6	6	—	—		
VIN5	7	7	—	—		
VIN3	—	—	5	5	No Connect	No connect: must be left unconnected
VIN4	—	—	6	6		
VIN5	—	—	7	7		
VREFP1	8	8	8	8	Analog Input	Positive reference input
VREFN1	9	9	9	9	Analog Input	Negative reference input
VIN6 / VREFP2	10	10	10	10	Analog Input	Analog input pin or VREFP2 input
VIN7 / VREFN2	11	11	11	11	Analog Input	Analog input pin or VREFN2 input
IB2	12	—	12	—	Analog output	Excitation current sources for external RTDs
IB1	13	—	13	—		
IB2	—	12	—	12	No Connect	No connect: must be left unconnected
IB1	—	13	—	13		
XOUT	14	14	14	14	Analog output	External crystal oscillator connection
XIN / CLK	15	15	15	15	Analog input	External crystal oscillator connection or external clock input
GND	16	16	16	16	Ground	Power supply ground
CSB	17	17	17	17	Digital Input	Chip select bar
SCLK	18	18	18	18	Digital Input	Serial clock

Copyright © 2011–2016, Texas Instruments Incorporated

Pin Functions (continued)

PIN					TYPE	FUNCTION
NAME	LMP90080 PIN NO.	LMP90079 PIN NO.	LMP90078 PIN NO.	LMP90077 PIN NO.		
SDI	19	19	19	19	Digital Input	Serial data input
SDO / DRDYB	20	20	20	20	Digital Output	Serial data output and data ready bar
D0	21	21	21	21	Digital IO	General purpose input/output (GPIO) pins
D1	22	22	22	22		
D2	23	23	23	23		
D3	24	24	24	24		
D4	25	25	25	25		
D5	26	26	26	26		
D6 / DRDYB	27	27	27	27	Digital IO	General purpose input/output pin or data ready bar
VIO	28	28	28	28	Digital Supply	Digital input/output supply pin
Thermal Pad	—	—	—	—	—	Leave the thermal pad floating

8 Specifications

8.1 Absolute Maximum Ratings

See [(1)(2)(3)(4)].

	MIN	MAX	UNIT
Analog Supply Voltage, VA	–0.3	6.0	V
Digital I/O Supply Voltage, VIO	–0.3	6.0	
Reference Voltage, VREF	–0.3	VA+0.3	
Voltage on Any Analog Input Pin to GND [(5)]	–0.3	VA+0.3	
Voltage on Any Digital Input PIN to GND [(5)]	–0.3	VIO+0.3	
Voltage on SDO [(5)]	–0.3	VIO+0.3	
Input Current at Any Pin [(5)]		5	mA
Output Current Source or Sink by SDO		5	
Total Package Input and Output Current		20	
Junction Temperature (T_{JMAX})		150	°C
Storage Temperature (T_{stg})	–65	150	°C

(1) All voltages are measured with respect to GND, unless otherwise specified
(2) Stresses beyond those listed under *Absolute Maximum Ratings* may cause permanent damage to the device. These are stress ratings only, which do not imply functional operation of the device at these or any other conditions beyond those indicated under *Recommended Operating Conditions*. Exposure to absolute-maximum-rated conditions for extended periods may affect device reliability.
(3) For soldering specifications see product folder at http://www.ti.com and http://www.ti.com/lit/SNOA549
(4) If Military/Aerospace specified devices are required, contact the Texas Instruments Sales Office/ Distributors for availability and specifications.
(5) When the input voltage (VIN) exceeds the power supply (VIN < GND or VIN > VA), the current at that pin must be limited to 5mA and VIN has to be within the Absolute Maximum Rating for that pin. The 20 mA package input current rating limits the number of pins that can safely exceed the power supplies with current flow to four pins.

8.2 ESD Ratings

		VALUE	UNIT
$V_{(ESD)}$ Electrostatic discharge	Human-body model (HBM), per ANSI/ESDA/JEDEC JS-001 [(1)]	±2500	V
	Charged-device model (CDM), per JEDEC specification JESD22-C101 [(2)]	±1250	
	Machine models (MM)	±200	

(1) JEDEC document JEP155 states that 500-V HBM allows safe manufacturing with a standard ESD control process.
(2) JEDEC document JEP157 states that 250-V CDM allows safe manufacturing with a standard ESD control process.

Copyright © 2011–2016, Texas Instruments Incorporated

8.3 Recommended Operating Conditions

	MIN	MAX	UNIT
Analog Supply Voltage, VA	2.85	5.5	V
Digital I/O Supply Voltage, VIO	2.7	5.5	
Full Scale Input Range, VIN		±VREF / PGA	
Reference Voltage, VREF	0.5	VA	
Temperature Range for Electrical Characteristics	–40	125	°C
Operating Temperature Range	–40	125	
Junction to Ambient Thermal Resistance ($R_{\theta JA}$)(1)		41	°C/W

(1) The maximum power dissipation is a function of $T_{J(MAX)}$ AND $R_{\theta JA}$. The maximum allowable power dissipation at any ambient temperature is $P_D = (T_{J(MAX)} - T_A) / R_{\theta JA}$.

8.4 Thermal Information

THERMAL METRIC(1)		LMP900xx HTSSOP (28 PINS)	UNIT
$R_{\theta JA}$	Junction-to-ambient thermal resistance	41	°C/W

(1) For more information about traditional and new thermal metrics, see the *IC Package Thermal Metrics* application report, SPRA953.

8.5 Electrical Characteristics

Unless otherwise noted, the key for the condition is (VA = VIO = VREF) / ODR (SPS) / buffer / calibration / gain . The typical values apply for T_A = +25°C.

PARAMETER		TEST CONDITIONS	MIN	TYP	MAX	UNIT
n	Resolution			16		Bits
ENOB / NFR	Effective Number of Bits and Noise Free Resolution	3V / all / ON / OFF / all. Shorted input.		See Table 1		Bits
		5V / all / ON / OFF / all. Shorted input.		See Table 3		Bits
ODR	Output Data Rates		1.6675	See Table 1	214.6	SPS
	Gain	FGA × PGA	1	See Table 3	128	
INL	Integral Non-Linearity(1)	3V / 214.65 / ON / ON / 1	-1	± 0.5	+1	LSB
		3V & 5V / 214.65 / ON / ON / 16		± 1		LSB
	Total Noise	3V / all / ON / ON / all. Shorted input.		See Table 2		µV
		5V / all / ON / OFF / all. Shorted input.		See Table 4		µV
OE	Offset Error	3V & 5V / all / ON or OFF / ON / all		Below Noise Floor (rms)		µV
		3V / 214.65 / ON / ON / 1		1.22	9.52	µV
		3V / 214.65 / ON / ON / 128		0.00838	0.70	µV
		5V / 214.65 / ON / ON / 1		1.79	8.25	µV
		5V / 214.65 / ON / ON / 128		0.0112	0.63	µV
	Offset Drift Over Temp(1)	3V & 5V / 214.65 / ON or OFF/OFF/1-8		100		nV/°C
		3V & 5V / 214.65 / ON / ON / 1-8		3		nV/°C
		3V & 5V / 214.65 / ON / OFF / 16		25		nV/°C
		3V & 5V / 214.65 / ON / ON / 16		0.4		nV/°C
		3V & 5V / 214.65 / ON / OFF / 128		6		nV/°C
		3V & 5V / 214.65 / ON / ON / 128		0.125		nV/°C
	Offset Drift over Time(1)	5V / 214.65 / ON / OFF / 1, T_A = 150°C		2360		nV/1000 hours
		5V / 214.65 / ON / ON / 1, T_A = 150°C		100		nV/1000 hours
GE	Gain Error(1)	3V & 5V / 214.65 / ON / ON / 1, $T_{MIN} \le T_A \le T_{MAX}$	-80		80	ppm
		3V & 5V / 214.65 / ON / ON / 1		7		ppm
		3V & 5V / 13.42 / ON / ON / 16		50		ppm
		3V & 5V / 13.42 / ON / ON / 64		50		ppm
		3V & 5V / 13.42 / ON / ON / 128		100		ppm
	Gain Drift over Temp(1)	3V & 5V / 214.65 / ON / ON / all		0.5		ppm/°C

(1) This parameter is specified by design and/or characterization and is not tested in production.

Copyright © 2011–2016, Texas Instruments Incorporated

Electrical Characteristics (continued)

Unless otherwise noted, the key for the condition is (VA = VIO = VREF) / ODR (SPS) / buffer / calibration / gain . The typical values apply for T_A = +25°C.

PARAMETER		TEST CONDITIONS	MIN	TYP	MAX	UNIT
	Gain Drift over Time(1)	5V / 214.65 / ON / OFF / 1, T_A = 150°C		5.9		ppm/1000 hours
		5V / 214.65 / ON / ON / 1, T_A = 150°C		1.6		ppm/1000 hours
CONVERTER CHARACTERISTICS						
CMRR	Input Common Mode Rejection Ratio	DC, 3V / 214.65 / ON / ON / 1, $T_{MIN} \le T_A \le T_{MAX}$	70			dB
		DC, 3V / 214.65 / ON / ON / 1		117		dB
		DC, 5V / 214.65 / OFF / OFF / 1, $T_{MIN} \le T_A \le T_{MAX}$	90			dB
		DC, 5V / 214.65 / OFF / OFF / 1		120		dB
		50/60 Hz, 5V / 214.65 / OFF / OFF / 1		117		dB
	Reference Common Mode Rejection	VREF = 2.5V		101		dB
PSRR	Power Supply Rejection Ratio	DC, 3V / 214.65 / ON / ON / 1	75	115		dB
		DC, 5V / 214.65 / ON / ON / 1		112		dB
NMRR	Normal Mode Rejection Ratio(1)	47 Hz to 63 Hz, 5V / 13.42 / OFF / OFF / 1 $T_{MIN} \le T_A \le T_{MAX}$	95			dB
	Cross-talk(1)	3V / 214.65 / OFF / OFF / 1, $T_{MIN} \le T_A \le T_{MAX}$	95			dB
		3V / 214.65 / OFF / OFF / 1		136		dB
		5V / 214.65 / OFF / OFF / 1, $T_{MIN} \le T_A \le T_{MAX}$	95			dB
		5V / 214.65 / OFF / OFF / 1		143		dB
POWER SUPPLY CHARACTERISTICS						
VA	Analog Supply Voltage		2.85	3.0	5.5	V
VIO	Digital Supply Voltage		2.7	3.3	5.5	V

Copyright © 2011–2016, Texas Instruments Incorporated

Electrical Characteristics (continued)

Unless otherwise noted, the key for the condition is (VA = VIO = VREF) / ODR (SPS) / buffer / calibration / gain . The typical values apply for T_A = +25°C.

PARAMETER		TEST CONDITIONS	MIN	TYP	MAX	UNIT
IVA	Analog Supply Current	3V / 13.42 / OFF / OFF / 1, ext. CLK		400		µA
		3V / 13.42 / OFF / OFF / 1, ext. CLK, $T_{MIN} \le T_A \le T_{MAX}$			500	µA
		5V / 13.42 / OFF / OFF / 1, ext. CLK		464		µA
		5V / 13.42 / OFF / OFF / 1, ext. CLK, $T_{MIN} \le T_A \le T_{MAX}$			555	µA
		3V / 13.42 / ON / OFF / 64, ext. CLK		600		µA
		3V / 13.42 / ON / OFF / 64, ext. CLK, $T_{MIN} \le T_A \le T_{MAX}$			700	µA
		5V / 13.42 / ON / OFF / 64, ext. CLK		690		µA
		5V / 13.42 / ON / OFF / 64, ext. CLK, $T_{MIN} \le T_A \le T_{MAX}$			800	µA
		3V / 214.65 / ON / OFF / 64, int. CLK		1547		µA
		3V / 214.65 / ON / OFF / 64, int. CLK, $T_{MIN} \le T_A \le T_{MAX}$			1700	µA
		5V / 214.65 / ON / OFF / 64, int. CLK		1760		µA
		5V / 214.65 / ON / OFF / 64, int. CLK, $T_{MIN} \le T_A \le T_{MAX}$			2000	µA
		3V / 214.65 / OFF / OFF / 1, int. CLK		826		µA
		3V / 214.65 / OFF / OFF / 1, int. CLK, $T_{MIN} \le T_A \le T_{MAX}$			1000	µA
		5V / 214.65 / OFF / OFF / 1, int. CLK		941		µA
		5V / 214.65 / OFF / OFF / 1, int. CLK, $T_{MIN} \le T_A \le T_{MAX}$			1100	µA
		Standby, 3V , int. CLK		3	10	µA
		Standby, 3V , ext. CLK		257		µA
		Standby, 5V, int. CLK		5	15	µA
		Standby, 3V, ext. CLK		300		µA
		Power-down, 3V, int/ext CLK		2.6		µA
		Power-down, 3V, int/ext CLK, $T_{MIN} \le T_A \le T_{MAX}$			5	µA
		Power-down, 5V, int/ext CLK		4.6		µA
		Power-down, 5V, int/ext CLK, $T_{MIN} \le T_A \le T_{MAX}$			9	µA
REFERENCE INPUT						
VREFP	Positive Reference		VREFN + 0.5		VA	V
VREFN	Negative Reference		GND		VREFP - 0.5	V
VREF	Differential Reference	VREF = VREFP - VREFN	0.5		VA	V
ZREF	Reference Impedance	3V / 13.42 / OFF / OFF / 1		10		MΩ
IREF	Reference Input	3V / 13.42 / ON or OFF /ON or OFF/all		±2		µA
CREFP	Capacitance of the Positive Reference	gain = 1 (1)		6		pF
CREFN	Capacitance of the Negative Reference	gain = 1 (1)		6		pF
ILREF	Reference Leakage Current	Power-down		1		nA
ANALOG INPUT						
VINP	Positive Input	Gain = 1-8, buffer ON	GND + 0.1		VA - 0.1	V
		Gain = 16 - 128, buffer ON	GND + 0.4		VA - 1.5	V
		Gain = 1-8, buffer OFF	GND		VA	V
VINN	Negative Input	Gain = 1-8, buffer ON	GND + 0.1		VA - 0.1	V
		Gain = 16 - 128, buffer ON	GND + 0.4		VA - 1.5	V
		Gain = 1-8, buffer OFF	GND		VA	V

Copyright © 2011–2016, Texas Instruments Incorporated

Electrical Characteristics (continued)

Unless otherwise noted, the key for the condition is (VA = VIO = VREF) / ODR (SPS) / buffer / calibration / gain . The typical values apply for T_A = +25°C.

PARAMETER		TEST CONDITIONS	MIN	TYP	MAX	UNIT
VIN	Differential Input	VIN = VINP - VINN		±VREF / PGA		
ZIN	Differential Input Impedance	ODR = 13.42 SPS		15.4		MΩ
CINP	Capacitance of the Positive Input	5V / 214.65 / OFF / OFF / 1		4		pF
CINN	Capacitance of the Negative Input	5V / 214.65 / OFF / OFF / 1		4		pF
IIN	Input Leakage Current	3V & 5V / 13.42 / ON / OFF / 1-8		500		pA
		3V & 5V / 13.42 / ON / OFF / 16 - 128		100		pA
DIGITAL INPUT CHARACTERISTICS at VA = VIO = VREF = 3.0 V						
VIH	Logical "1" Input Voltage		0.7 x VIO			V
VIL	Logical "0" Input Voltage				0.3 x VIO	V
IIL	Digital Input Leakage Current		-10		+10	µA
VHYST	Digital Input Hysteresis			0.1 x VIO		V
DIGITAL OUTPUT CHARACTERISTICS at VA = VIO = VREF = 3.0 V						
VOH	Logical "1" Output Voltage	Source 300 µA	2.6			V
VOL	Logical "0" Output Voltage	Sink 300 µA			0.4	V
IOZH, IOZL	TRI-STATE Leakage Current		-10		10	µA
COUT	TRI-STATE Capacitance	See (1)		5		pF
EXCITATION CURRENT SOURCES CHARACTERISTICS (LMP90080/LMP90078 ONLY)						
IB1, IB2	Excitation Current Source Output			0, 100, 200, 300, 400, 500, 600, 700, 800, 900, 1000		µA
	IB1/IB2 Tolerance	VA = VREF = 3V		2.5%		
		VA = VREF = 3V, $T_{MIN} \le T_A \le T_{MAX}$	-7%		7%	
		VA = VREF = 5V		0.2%		
		VA = VREF = 5V, $T_{MIN} \le T_A \le T_{MAX}$	-3.5%		3.5%	
	IB1/IB2 Output Compliance Range	VA = 3.0V & 5.0V, IB1/IB2 = 100 µA to 1000 µA		VA - 0.8		V
	IB1/IB2 Regulation	VA = 5.0V, IB1/IB2 = 100 µA to 1000 µA		0.07		%/V
IBTC	IB1/IB2 Drift	VA = 3.0V		95		ppm/°C
		VA = 5.0V		60		ppm/°C

Copyright © 2011–2016, Texas Instruments Incorporated

Electrical Characteristics (continued)

Unless otherwise noted, the key for the condition is (VA = VIO = VREF) / ODR (SPS) / buffer / calibration / gain . The typical values apply for T_A = +25°C.

PARAMETER		TEST CONDITIONS	MIN	TYP	MAX	UNIT
IBMT	IB1/IB2 Matching	3V & 5V / 214.65 / OFF / OFF / 1, IB1/IB2 = 100 µA		0.34%		
		3V & 5V / 214.65 / OFF / OFF / 1, IB1/IB2 = 100 µA, $T_{MIN} \le T_A \le T_{MAX}$			1.53%	
		3V & 5V / 214.65 / OFF / OFF / 1, IB1/IB2 = 200 µA		0.22%		
		3V & 5V / 214.65 / OFF / OFF / 1, IB1/IB2 = 200 µA, $T_{MIN} \le T_A \le T_{MAX}$			1%	
		3V & 5V / 214.65 / OFF / OFF / 1, IB1/IB2 = 300 µA		0.2%		
		3V & 5V / 214.65 / OFF / OFF / 1, IB1/IB2 = 300 µA, $T_{MIN} \le T_A \le T_{MAX}$			0.85%	
		3V & 5V / 214.65 / OFF / OFF / 1, IB1/IB2 = 400 µA		0.15%		
		3V & 5V / 214.65 / OFF / OFF / 1, IB1/IB2 = 400 µA, $T_{MIN} \le T_A \le T_{MAX}$			0.8%	
		3V & 5V / 214.65 / OFF / OFF / 1, IB1/IB2 = 500 µA		0.14%		
		3V & 5V / 214.65 / OFF / OFF / 1, IB1/IB2 = 500 µA, $T_{MIN} \le T_A \le T_{MAX}$			0.7%	
		3V & 5V / 214.65 / OFF / OFF / 1, IB1/IB2 = 600 µA		0.13%		
		3V & 5V / 214.65 / OFF / OFF / 1, IB1/IB2 = 600 µA, $T_{MIN} \le T_A \le T_{MAX}$			0.7%	
		3V & 5V / 214.65 / OFF / OFF / 1, IB1/IB2 = 700 µA		0.075%		
		3V & 5V / 214.65 / OFF / OFF / 1, IB1/IB2 = 700 µA, $T_{MIN} \le T_A \le T_{MAX}$			0.65%	
		3V & 5V / 214.65 / OFF / OFF / 1, IB1/IB2 = 800 µA		0.085%		
		3V & 5V / 214.65 / OFF / OFF / 1, IB1/IB2 = 800 µA, $T_{MIN} \le T_A \le T_{MAX}$			0.6%	
		3V & 5V / 214.65 / OFF / OFF / 1, IB1/IB2 = 900 µA		0.11%		
		3V & 5V / 214.65 / OFF / OFF / 1, IB1/IB2 = 900 µA,$T_{MIN} \le T_A \le T_{MAX}$			0.55%	
		3V & 5V / 214.65 / OFF / OFF / 1, IB1/IB2 = 1000 µA		0.11%		
		3V & 5V / 214.65 / OFF / OFF / 1, IB1/IB2 = 1000 µA, $T_{MIN} \le T_A \le T_{MAX}$			0.45%	
IBMTC	IB1/IB2 Matching Drfit	VA = 3.0V & 5.0V, IB1/IB2 = 100 µA to 1000 µA		2		ppm/°C
INTERNAL/EXTERNAL CLK						
CLKIN	Internal Clock Frequency			893		kHz
CLKEXT	External Clock Frequency	See (1)	1.8	3.5717	7.2	MHz
	External Crystal Frequency	Input Low Voltage		0		V
		Input High Voltage		1		V
		Frequency	1.8	3.5717	7.2	MHz
		Start-up time		7		ms
SCLK	Serial Clock				10	MHz

Copyright © 2011–2016, Texas Instruments Incorporated

8.6 Timing Requirements

Unless otherwise noted, specified limits apply for $V_A = V_{IO} = 3$ V. The typical values apply for $T_A = 25°C$.

			MIN	NOM	MAX	UNIT
f_{SCLK}		See Figure 1.			10	MHz
t_{CH}	SCLK High time		0.4 / f_{SCLK}			ns
t_{CL}	SCLK Low time		0.4 / f_{SCLK}			ns

8.7 Timing Requirements - CSB Timing

			MIN	NOM	MAX	UNIT
t_{CSSU}	CSB Setup time prior to an SCLK rising edge	See Figure 2.	5			ns
t_{CSH}	CSB Hold time after the last rising edge of SCLK	See Figure 3.	6			ns

8.8 Timing Requirements - SCLK and SDI Timing

			MIN	NOM	MAX	UNIT
t_{CLKR}	SCLK Rise time	See Figure 4.		1.15		ns
t_{CLKF}	SCLK Fall time			1.15		ns
t_{DISU}	SDI Setup time prior to an SCLK rising edge	See Figure 5.	5			ns
t_{DIH}	SDI Hold time after an SCLK rising edge		6			ns

8.9 Timing Requirements - SDO Timing With DOD1

			MIN	NOM	MAX	UNIT
t_{DOA}	SDO Access time after an SCLK falling edge	See Figure 6.			35	ns
t_{DOH}	SDO Hold time after an SCLK falling edge		5			ns
t_{DOD1}	SDO Disable time after the rising edge of CSB	See Figure 7.			27	ns

8.10 Timing Requirements - SDO Timing with DOD2

			MIN	NOM	MAX	UNIT
t_{DOD2}	SDO Disable time after either edge of SCLK	See Figure 8 and Figure 9.			27	ns

8.11 Timing Requirements - SDO and DRDYB Timing

			MIN	NOM	MAX	UNIT
t_{DOE}	SDO Enable time from the falling edge of the 8th SCLK	See Figure 10.			35	ns
t_{DOR}	SDO Rise time(1)	See Figure 11.		7		ns
t_{DOF}	SDO Fall time(1)			7		ns
t_{DRDYB}	Data Ready Bar pulse at every 1/ODR second	ODR ≤ 13.42 SPS		64		µs
		13.42 < ODR ≤ 214.65 SPS		4		µs

(1) This parameter is specified by design and/or characterization and is not tested in production.

Copyright © 2011–2016, Texas Instruments Incorporated

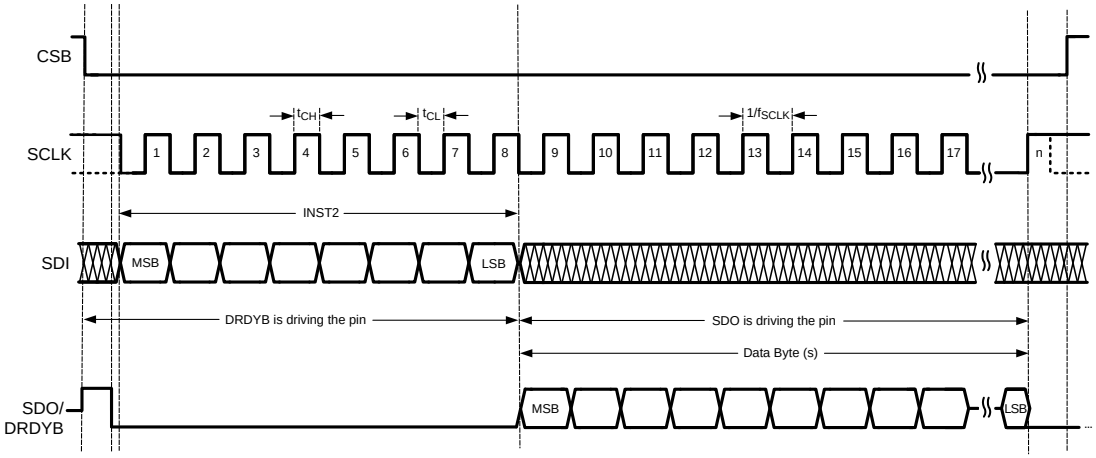

Figure 1. Timing Diagram

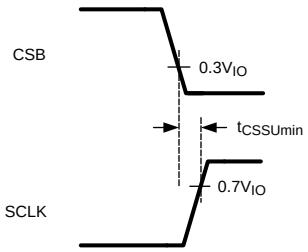

Figure 2. CBS Setup Time

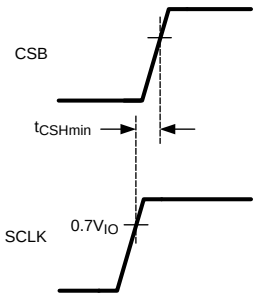

Figure 3. CBS Hold Time

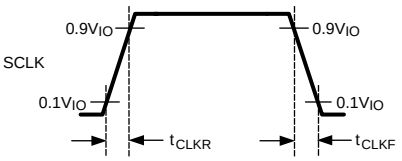

Figure 4. SCLK Rise and Fall Time

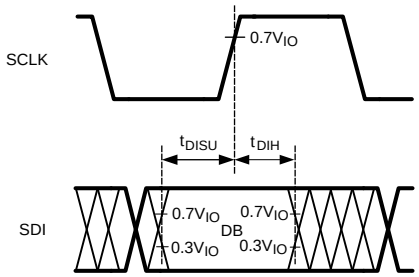

Figure 5. SCLK Setup and Hold Time

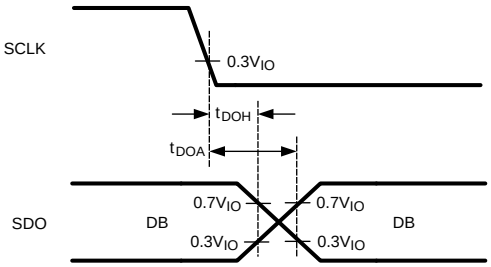

Figure 6. SDO Enable Time

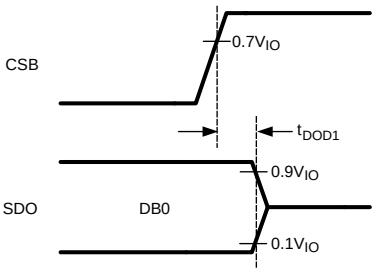

Figure 7. SDO Rise and Fall Time

Copyright © 2011–2016, Texas Instruments Incorporated

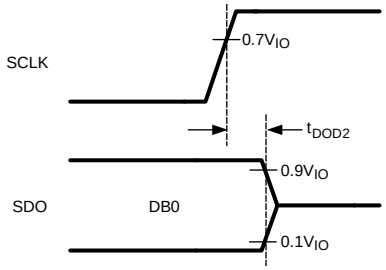

Figure 8. SDO Disable Time

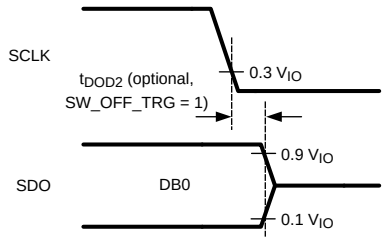

Figure 9. SDO Rise and Fall Time

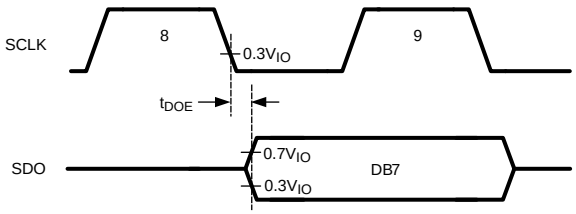

Figure 10. SDO Enable Time

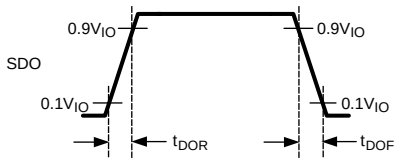

Figure 11. SDO Rise and Fall Time

Table 1. ENOB (Noise Free Resolution) vs Sampling Rate and Gain At $V_A = V_{IO} = V_{REF} = 3V$

ODR (SPS)	GAIN							
	1	2	4	8	16	32	64	128
1.6775	16 (16)	16 (16)	16 (16)	16 (16)	16 (16)	16 (16)	16 (16)	16 (15.5)
3.355	16 (16)	16 (16)	16 (16)	16 (16)	16 (16)	16 (16)	16 (16)	16 (14.5)
6.71	16 (16)	16 (16)	16 (16)	16 (15.5)	16 (16)	16 (16)	16 (15)	16 (14.5)
13.42	16 (16)	16 (16)	16 (15.5)	16 (15)	16 (16)	16 (15.5)	16 (15)	16 (14)
26.83125	16 (16)	16 (16)	16 (16)	16 (16)	16 (16)	16 (16)	16 (15.5)	16 (15)
53.6625	16 (16)	16 (16)	16 (16)	16 (16)	16 (16)	16 (16)	16 (15)	16 (14.5)
107.325	16 (16)	16 (16)	16 (16)	16 (15.5)	16 (16)	16 (15.5)	16 (14.5)	16 (14)
214.65	16 (16)	16 (16)	16 (15.5)	16 (15)	16 (16)	16 (15)	16 (14.5)	16 (13.5)

Table 2. RMS Noise (mV) vs Sampling Rate and Gain At $V_A = V_{IO} = V_{REF} = 3V$

ODR (SPS)	GAIN OF THE ADC							
	1	2	4	8	16	32	64	128
1.6775	3.08	1.90	1.53	1.27	0.23	0.21	0.15	0.14
3.355	4.56	2.70	2.21	1.67	0.34	0.27	0.24	0.26
6.71	6.15	4.10	3.16	2.39	0.51	0.40	0.37	0.35
13.42	8.60	5.85	4.29	3.64	0.67	0.54	0.51	0.49
26.83125	3.35	2.24	1.65	1.33	0.33	0.27	0.26	0.25
53.6625	4.81	3.11	2.37	1.90	0.44	0.39	0.37	0.36
107.325	6.74	4.51	3.38	2.66	0.63	0.54	0.52	0.49
214.65	9.52	6.37	4.72	3.79	0.90	0.79	0.72	0.70

Copyright © 2011–2016, Texas Instruments Incorporated

Table 3. ENOB (Noise Free Resolution) vs Sampling Rate and Gain At $V_A = V_{IO} = V_{REF} = 5V$

SPS	GAIN OF THE ADC							
	1	2	4	8	16	32	64	128
1.6775	16 (16)	16 (16)	16 (16)	16 (16)	16 (16)	16 (16)	16 (16)	16 (16)
3.355	16 (16)	16 (16)	16 (16)	16 (16)	16 (16)	16 (16)	16 (16)	16 (15.5)
6.71	16 (16)	16 (16)	16 (16)	16 (16)	16 (16)	16 (16)	16 (16)	16 (15)
13.42	16 (16)	16 (16)	16 (16)	16 (16)	16 (16)	16 (16)	16 (15.5)	16 (15)
26.83125	16 (16)	16 (16)	16 (16)	16 (16)	16 (16)	16 (16)	16 (16)	16 (15.5)
53.6625	16 (16)	16 (16)	16 (16)	16 (16)	16 (16)	16 (16)	16 (16)	16 (15)
107.325	16 (16)	16 (16)	16 (16)	16 (16)	16 (16)	16 (16)	16 (15.5)	16 (14.5)
214.65	16 (16)	16 (16)	16 (16)	16 (16)	16 (16)	16 (16)	16 (15)	16 (14)

Table 4. RMS Noise (mV) vs. Sampling Rate and Gain At $V_A = V_{IO} = V_{REF} = 5V$

SPS	GAIN OF THE ADC							
	1	2	4	8	16	32	64	128
1.6775	2.68	1.65	1.24	1.00	0.22	0.19	0.17	0.16
3.355	3.86	2.36	1.78	1.47	0.34	0.27	0.22	0.22
6.71	5.23	3.49	2.47	2.09	0.44	0.34	0.30	0.32
13.42	7.94	5.01	3.74	2.94	0.61	0.50	0.45	0.43
26.83125	2.90	1.86	1.34	1.08	0.29	0.24	0.23	0.23
53.6625	4.11	2.60	1.90	1.50	0.39	0.35	0.32	0.31
107.325	5.74	3.72	2.72	2.11	0.56	0.48	0.46	0.44
214.65	8.25	5.31	3.82	2.97	0.79	0.68	0.64	0.63

Copyright © 2011–2016, Texas Instruments Incorporated

8.12 Typical Characteristics

Unless otherwise noted, specified limits apply for VA = VIO = VREF = 3.0 V. The maximum and minimum values apply for $T_A = T_{MIN}$ to T_{MAX}; the typical values apply for T_A = 25°C.

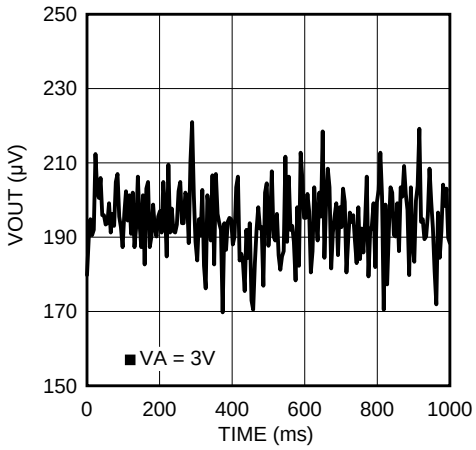

Figure 12. Noise Measurement Without Calibration at Gain = 1

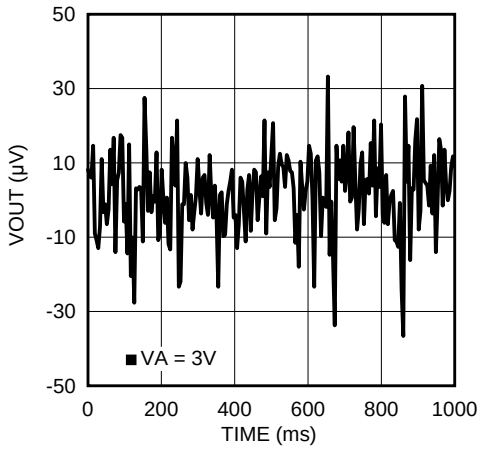

Figure 13. Noise Measurement With Calibration at Gain = 1

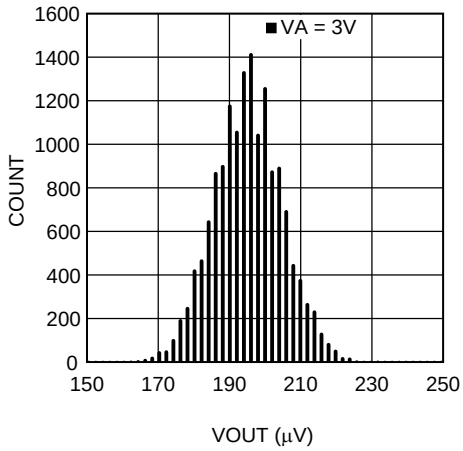

Figure 14. Histogram Without Calibration at Gain = 1

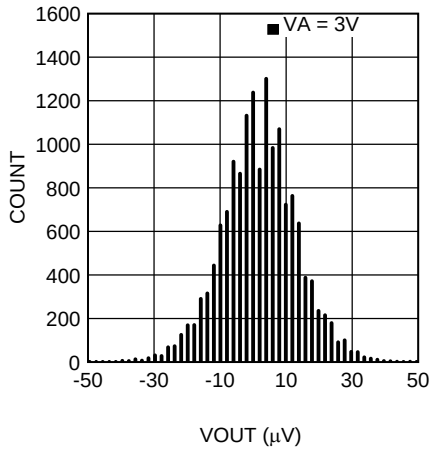

Figure 15. Histogram With Calibration at Gain = 1

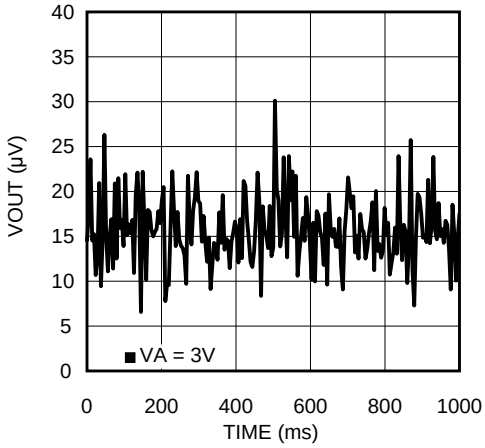

Figure 16. Noise Measurement Without Calibration at Gain = 8

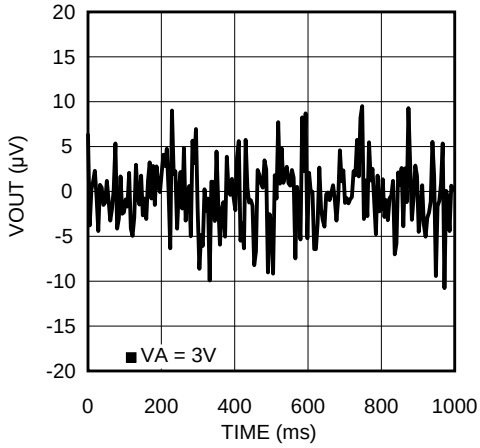

Figure 17. Noise Measurement With Calibration at Gain = 8

Copyright © 2011–2016, Texas Instruments Incorporated

Typical Characteristics (continued)

Unless otherwise noted, specified limits apply for VA = VIO = VREF = 3.0 V. The maximum and minimum values apply for $T_A = T_{MIN}$ to T_{MAX}; the typical values apply for T_A = 25°C.

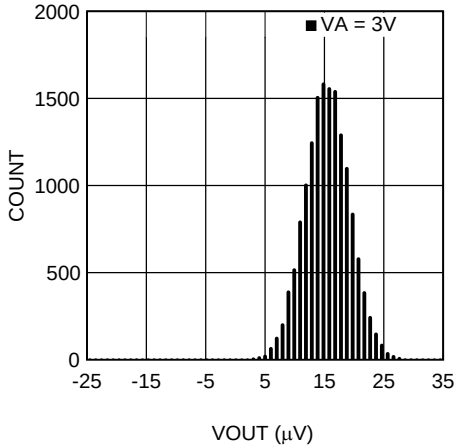

Figure 18. Histogram Without Calibration at Gain = 8

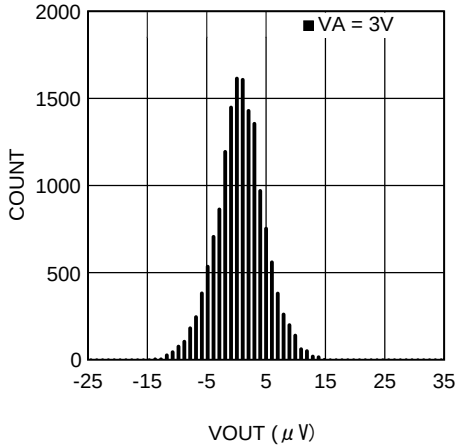

Figure 19. Histogram With Calibration at Gain = 8

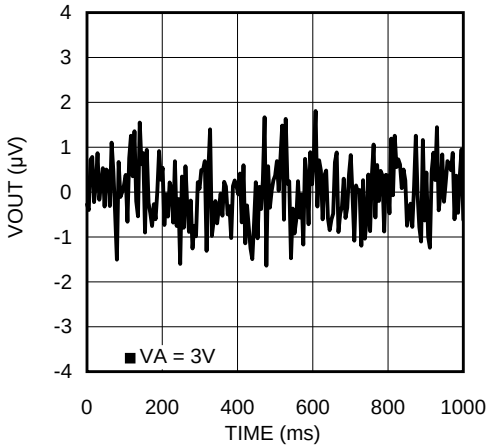

Figure 20. Noise Measurement Without Calibration at Gain = 128

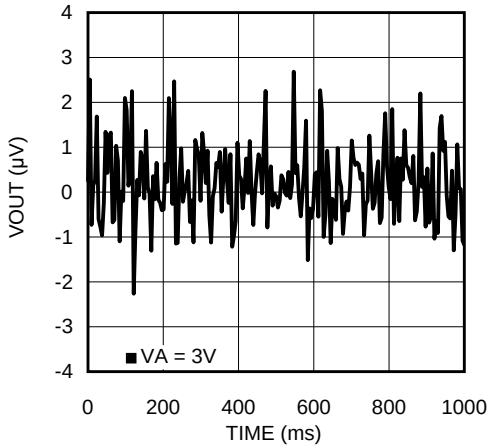

Figure 21. Noise Measurement With Calibration at Gain = 128

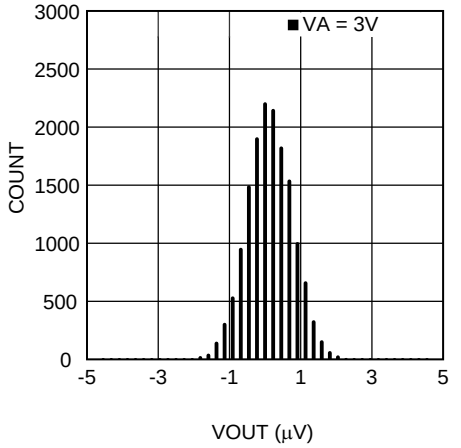

Figure 22. Histogram Without Calibration at Gain = 128

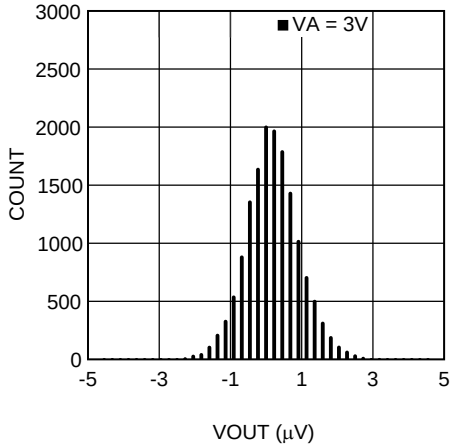

Figure 23. Histogram With Calibration at Gain = 128

Copyright © 2011–2016, Texas Instruments Incorporated

Typical Characteristics (continued)

Unless otherwise noted, specified limits apply for VA = VIO = VREF = 3.0 V. The maximum and minimum values apply for $T_A = T_{MIN}$ to T_{MAX}; the typical values apply for T_A = 25°C.

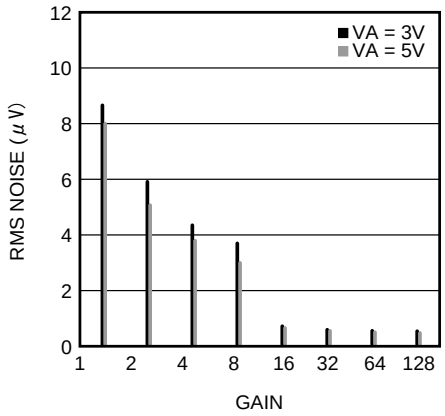

Figure 24. Noise vs. Gain Without Calibration at ODR = 13.42 SPS

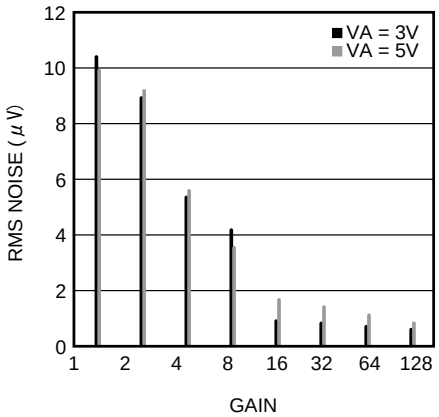

Figure 25. Noise vs. Gain With Calibration at ODR = 13.42 SPS

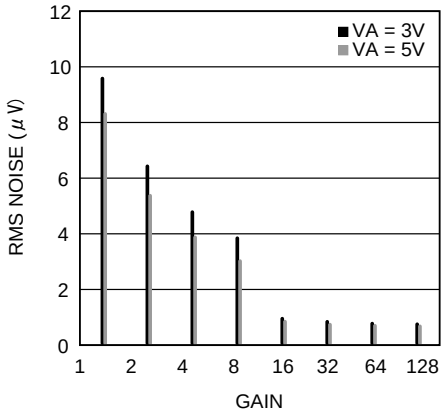

Figure 26. Noise vs. Gain Without Calibration at ODR = 214.65 SPS

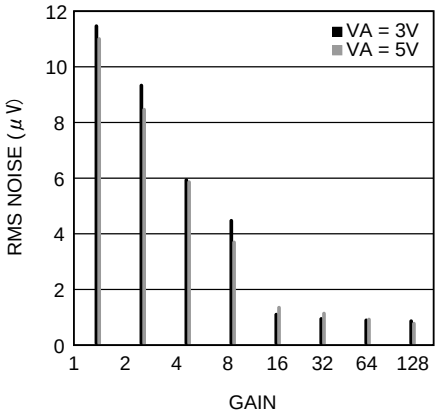

Figure 27. Noise vs. Gain With Calibration at ODR = 214.65 SPS

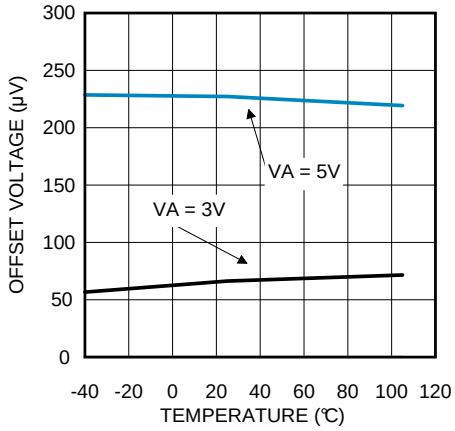

Figure 28. Offset Error vs. Temperature Without Calibration at Gain = 1

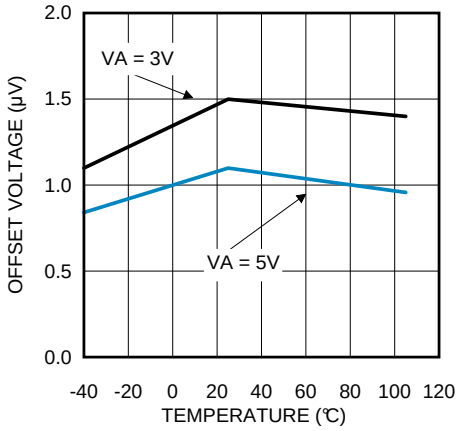

Figure 29. Offset Error vs. Temperature With Calibration at Gain = 1

Copyright © 2011–2016, Texas Instruments Incorporated

Typical Characteristics (continued)

Unless otherwise noted, specified limits apply for VA = VIO = VREF = 3.0 V. The maximum and minimum values apply for $T_A = T_{MIN}$ to T_{MAX}; the typical values apply for T_A = 25°C.

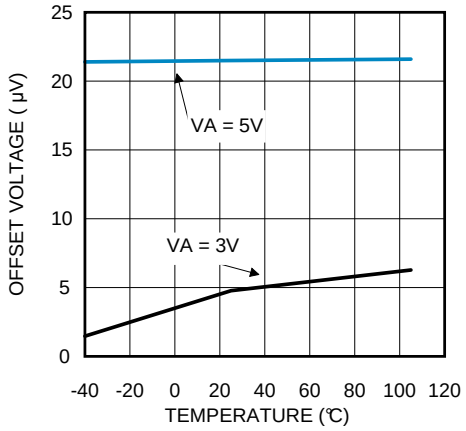

Figure 30. Offset Error vs. Temperature Without Calibration at Gain = 8

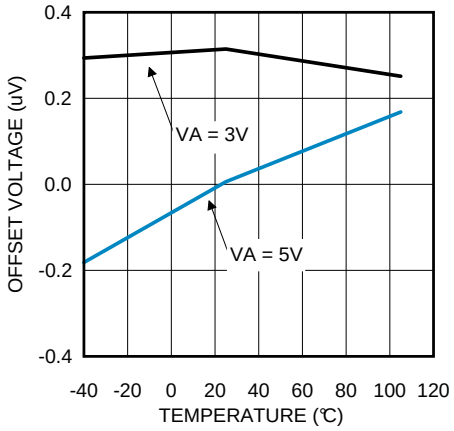

Figure 31. Offset Error vs. Temperature With Calibration at Gain = 8

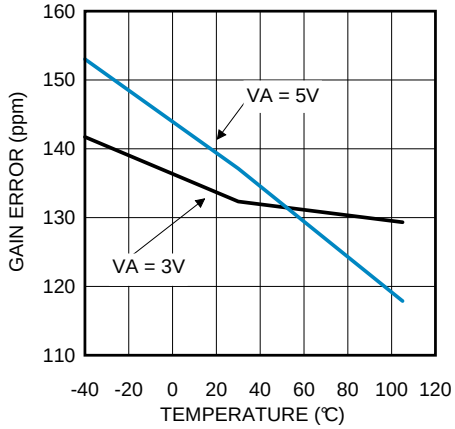

Figure 32. Gain Error vs. Temperature Without Calibration at Gain = 1

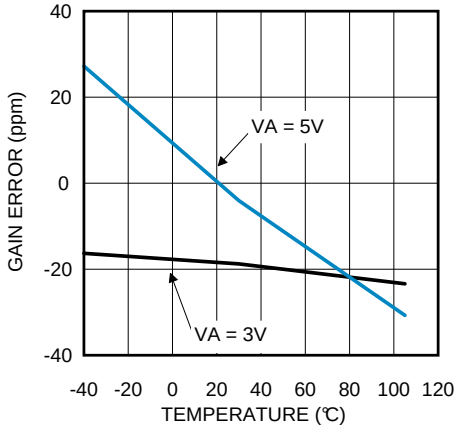

Figure 33. Gain Error vs. Temperature With Calibration at Gain = 1

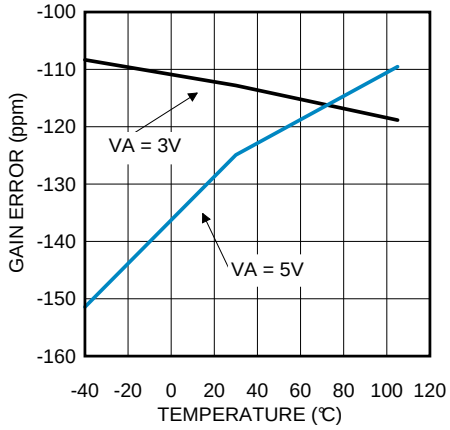

Figure 34. Gain Error vs. Temperature Without Calibration at Gain = 8

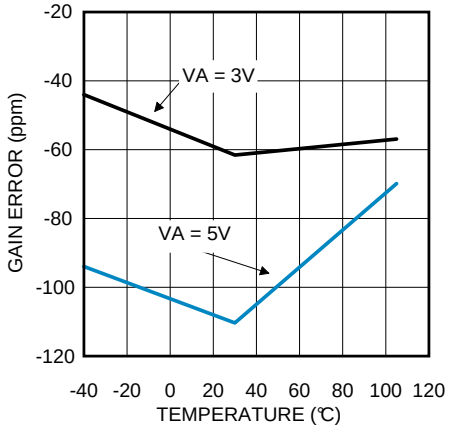

Figure 35. Gain Error vs. Temperature With Calibration at Gain = 8

Copyright © 2011–2016, Texas Instruments Incorporated

Typical Characteristics (continued)

Unless otherwise noted, specified limits apply for VA = VIO = VREF = 3.0 V. The maximum and minimum values apply for $T_A = T_{MIN}$ to T_{MAX}; the typical values apply for T_A = 25°C.

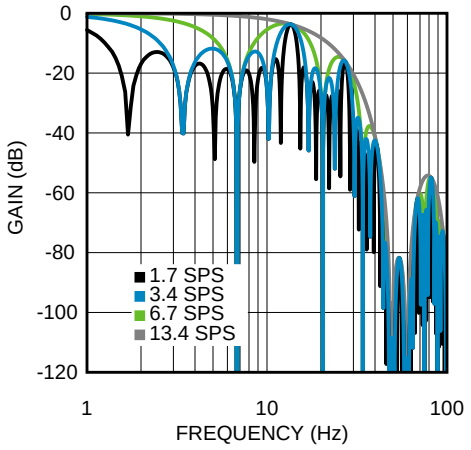

Figure 36. Digital Filter Frequency Response

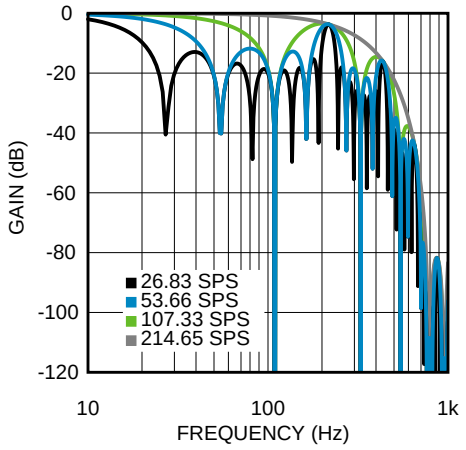

Figure 37. Digital Filter Frequency Response

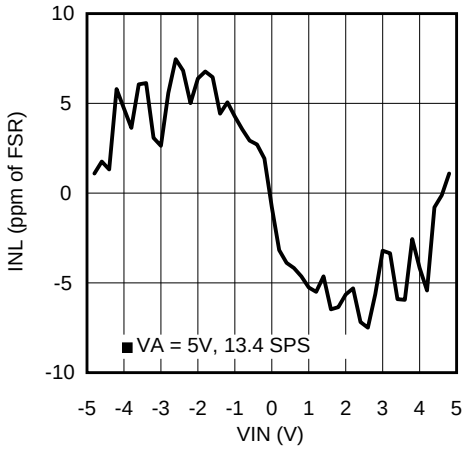

Figure 38. INL at Gain = 1

9 Detailed Description

9.1 Overview

Throughout this datasheet, the LMP90080/LMP90079/LMP90078/LMP90077 will be referred to as the LMP900xx.

The LMP900xx is a low-power 16-Bit ΣΔ ADC with 4 fully differential/7 single-ended analog channels for the LMP90080/LMP90079 and 2 full differential/4 single-ended for the LMP90078/LMP90077. Its serial data output is two's complement format. The output data rate (ODR) ranges from 1.6775 SPS to 214.65 SPS.

The serial communication for LMP900xx is SPI, a synchronous serial interface that operates using 4 pins: chip select bar (CSB), serial clock (SCLK), serial data in (SDI), and serial data out / data ready bar (SDO/DRDYB).

True continuous built-in offset and gain background calibration is also available to improve measurement accuracy. Unlike other ADCs, the LMP900xx's background calibration can run without heavily impacting the input signal. This unique technique allows for positive as well as negative gain calibration and is available at all gain settings.

The registers can be found in the *Register Maps* section, and a detailed description of the LMP900xx are provided in the following sections.

9.2 Functional Block Diagram

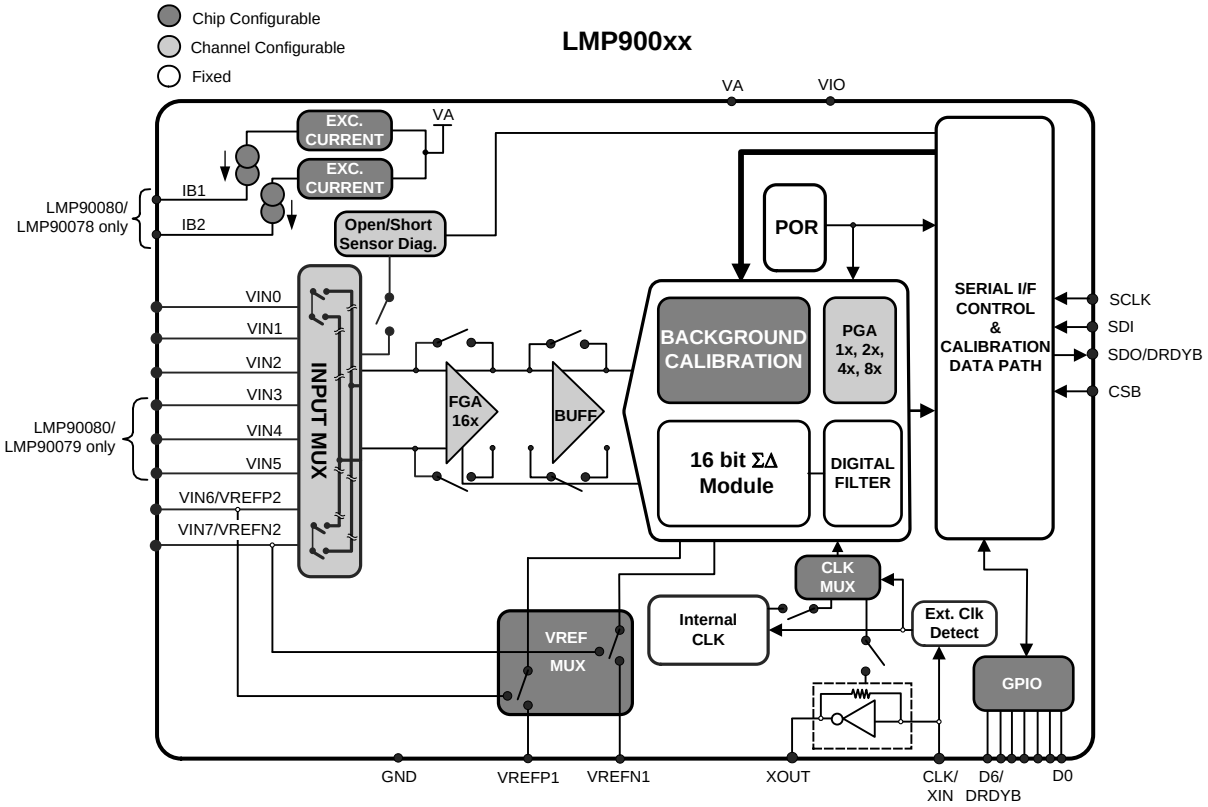

Copyright © 2011–2016, Texas Instruments Incorporated

9.3 Feature Description

9.3.1 Calibration

As seen in Figure 39, there are two types of calibration: background calibration and system calibration. These calibrations are further described in the next sections.

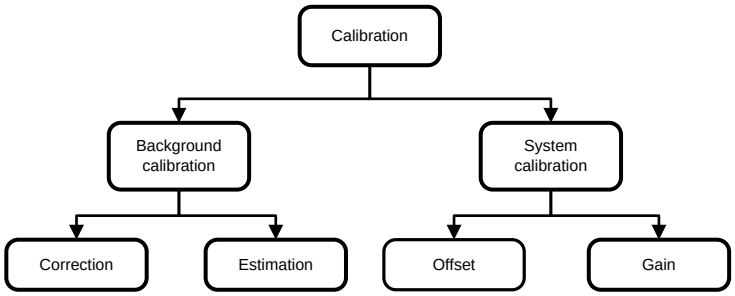

Figure 39. Types of Calibration

9.3.1.1 Background Calibration

Background calibration is the process of continuously determining and applying the offset and gain calibration coefficients to the output codes to minimize the LMP900xx's offset and gain errors. Background calibration is a feature built into the LMP900xx and is automatically done by the hardware without interrupting the input signal.

Four differential channels, CH0-CH3, each with its own gain and ODRs, can be calibrated to improve the accuracy.

9.3.1.1.1 Types of Background Calibration:

Figure 39 also shows that there are two types of background calibration:

Type 1: Correction the process of continuously determining and applying the offset and gain calibration coefficients to the output codes to minimize the LMP900xx's offset and gain errors.

This method keeps track of changes in the LMP900xx's gain and offset errors due to changes in the operating condition such as voltage, temperature, or time.

Type 2: Estimation the process of determining and continuously applying the last known offset and gain calibration coefficients to the output codes to minimize the LMP900xx's offset and gain errors.

The last known offset or gain calibration coefficients can come from two sources. The first source is the default coefficient which is pre-determined and burnt in the device's non-volatile memory. The second source is from a previous calibration run of Type 1: Correction.

The benefits of using Type 2 calibration is a higher throughput, lower power consumption, and slightly better noise. The exact savings would depend on the number of channels being scanned, and the ODR and gain of each channel.

9.3.1.1.2 Using Background Calibration:

There are four modes of background calibration, which can be programmed using the BGCALCN bits. They are as follows:

- BgcalMode0: Background Calibration OFF
- BgcalMode1: Offset Correction / Gain Estimation
- BgcalMode2: Offset Correction / Gain Correction. Follow Figure 40 to set other appropriate registers when using this mode.
- BgcalMode3: Offset Estimation / Gain Estimation

Copyright © 2011–2016, Texas Instruments Incorporated

Feature Description (continued)

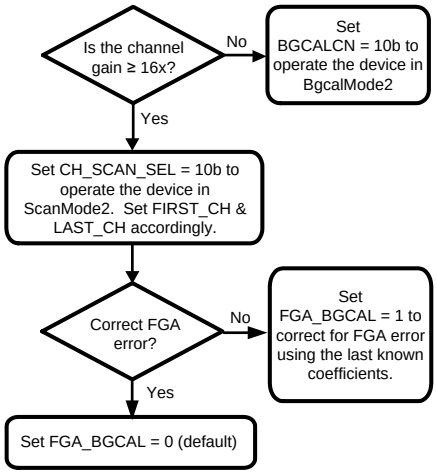

Figure 40. BgcalMode2 Register Settings

If operating in BgcalMode2, four channels (with the same ODR) are being converted, and FGA_BGCAL = 0 (default), then the ODR is reduced by:

1. 0.19% of 1.6775 SPS
2. 0.39% of 3.355 SPS
3. 0.78% of 6.71 SPS
4. 1.54% of 13.42 SPS
5. 3.03% of 26.83125 SPS
6. 5.88% of 53.6625 SPS
7. 11.11% of 107.325 SPS
8. 20% of 214.65 SPS

9.3.1.2 System Calibration

The LMP900xx provides some unique features to support easy system offset and system gain calibrations.

The System Calibration Offset Registers (CHx_SCAL_OFFSET) hold the System Calibration Offset Coefficients in 16-bit, two's complement binary format. The System Calibration Gain Registers (CHx_SCAL_GAIN) hold the System Calibration Gain Coefficient in 16-bit, 1.15, unsigned, fixed-point binary format. For each channel, the System Calibration Offset coefficient is subtracted from the conversion result prior to the division by the System Calibration Gain coefficient.

A data-flow diagram of these coefficients can be seen in Figure 41.

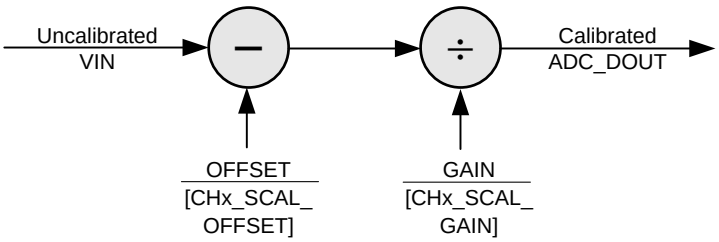

Figure 41. System Calibration Data-Flow Diagram

There are four distinct sets of System Calibration Offset and System Calibration Gain Registers for use with CH0-CH3. CH4-CH6 reuse the registers of CH0-CH2, respectively.

Copyright © 2011–2016, Texas Instruments Incorporated

Feature Description (continued)

The LMP900xx provides two system calibration modes that automatically fill the Offset and Gain coefficients for each channel. These modes are the System Calibration Offset Coefficient Determination mode and the System Calibration Gain Coefficient Determination mode. The System Calibration Offset Coefficient Determination mode must be entered prior to the System Calibration Gain Coefficient Determination mode, for each channel.

The system zero-scale condition is a system input condition (sensor loading) for which zero (0x0000) system-calibrated output code is desired. It may not, however, cause a zero input voltage at the input of the ADC.

The system reference-scale condition is usually the system full-scale condition in which the system's input (or sensor's loading) would be full-scale and the desired system-calibrated output code would be 0x8000 (unsigned 16-bit binary). However, system full-scale condition need not cause full-scale input voltage at the input of the ADC.

The system reference-scale condition is not restricted to just the system full-scale condition. In fact, it can be any arbitrary fraction of full-scale (up to 1.25 times) and the desired system-calibrated output code can be any appropriate value (up to 0xA000). The CHx_SCAL_GAIN register must be written with the desired system-calibrated output code (default:0x8000) before entering the System Calibration Gain Coefficient Determination mode. This helps in in-place system calibration.

9.3.1.2.1 System Calibration Offset Coefficient Determination Mode

Below are the detailed procedures for using the System Calibration Offset Coefficient Determination and System Calibration Gain Coefficient Determination modes.

1. Apply system zero-scale condition to the channel (CH0/CH1/CH2/CH3).
2. Enter the System Calibration Offset Coefficient Determination mode by programming 0x1 in the SCALCN register.
3. LMP900xx starts a fresh conversion at the selected output data rate for the selected channel. At the end of the conversion, the CHx_SCAL_OFFSET register is filled-in with the System Calibration Offset coefficient.
4. The System Calibration Offset Coefficient Determination mode is automatically exited.
5. The computed calibration coefficient is accurate only to the effective resolution of the device and will probably contain some noise. The noise factor can be minimized by computing over many times, averaging (externally) and putting the resultant value back into the register. Alternatively, select the output data rate to be 26.83 SPS or 1.67 SPS.

9.3.1.2.2 System Calibration Gain Coefficient Determination Mode

1. Repeat the System Calibration Offset Coefficient Determination to calibrate the System offset for the channel.
2. Apply the system reference-scale condition to the channel CH0/CH1/CH2/CH3.
3. In the CHx_SCAL_GAIN register, program the expected (desired) system-calibrated output code for this condition in 16-bit unsigned format.
4. Enter the System Calibration Gain Coefficient Determination mode by programming 0x3 in the SCALCN register.
5. LMP900xx starts a fresh conversion at the selected output data rate for the channel. At the end of the conversion, the CHx_SCAL_GAIN is filled-in (or overwritten) with the System Calibration Gain coefficient.
6. The System Calibration Gain Coefficient Determination mode is automatically exited.
7. The computed calibration coefficient is accurate only to the effective resolution of the device and will probably contain some noise. The noise factor can be minimized by computing over many times, averaging (externally) and putting the resultant value back into the register. Alternatively, select the output data rate to be 26.83 SPS or 1.67 SPS.

Copyright © 2011–2016, Texas Instruments Incorporated

Feature Description (continued)

9.3.1.2.3 Post-Calibration Scaling

LMP900xx allows scaling (multiplication and shifting) for the System Calibrated result. This eases downstream processing, if any. Multiplication is done using the System Calibration Scaling Coefficient in the CHx_SCAL_SCALING register and shifting is done using the System Calibration Bits Selector in the CHx_SCAL_BITS_SELECTOR register.

The System Calibration Bits Selector value should ideally be the logarithm (to the base 2) of the System Calibration Scaling Coefficient value.

There are four distinct sets of System Calibration Scaling and System Calibration Bits Selector Registers for use with CH0-CH3. CH4-CH6 reuse the registers of CH0-CH2, respectively.

A data-flow diagram of these coefficients can be seen in Figure 42.

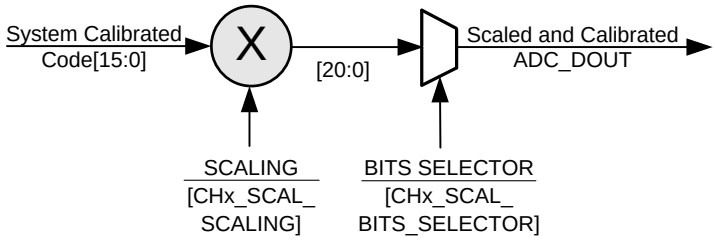

Figure 42. Post-Calibration Scaling Data-Flow Diagram

9.3.2 True Continuous Background Calibration

The LMP90080/LMP90079/LMP90078/LMP90077 feature a 16-bit ΣΔ core with continuous background calibration to compensate for gain and offset errors in the ADC, virtually eliminating any drift with time and temperature. The calibration is performed in the background without user or ADC input interruption, making it unique in the industry and eliminating down time associated with field calibration required with other solutions. Having this continuous calibration improves performance over the entire life span of the end product.

9.3.3 Continuous Background Sensor Diagnostics

Sensor diagnostics are also performed in the background, without interfering with signal path performance, allowing the detection of sensor shorts, opens, and out-of-range signals, which vastly improves system reliability. In addition, the fully flexible input multiplexer described below allows any input pin to be connected to any ADC input channel providing additional sensor path diagnostic capability.

9.3.4 Flexible Input MUX Channels

The flexible input MUX allows interfacing to a wide range of sensors such as thermocouples, RTDs, thermistors, and bridge sensors. The LMP90080/LMP90079's multiplexer supports 4 differential channels while the LMP90078/LMP90077 supports 2. Each effective input voltage that is digitized is $V_{IN} = V_{INX} – V_{INY}$, where x and y are any input. In addition, the input multiplexer of the LMP90080/LMP90079 also supports 7 single-ended channels (LMP90078/LMP90077 supports 4), where the common ground is any one of the inputs.

9.3.5 Programmable Gain Amplifiers (FGA & PGA)

The LMP90080/LMP90079/LMP90078/LMP90077 contain an internal 16x fixed gain amplifier (FGA) and a 1x, 2x, 4x, or 8x programmable gain amplifier (PGA). This allows accurate gain settings of 1x, 2x, 4x, 8x, 16x, 32x, 64x, or 128x through configuration of internal registers. Having an internal amplifier eliminates the need for external amplifiers that are costly, space consuming, and difficult to calibrate.

9.3.6 Excitation Current Sources (IB1 & IB2) - LMP90080/LMP90078

Two matched internal excitation currents, IB1 and IB2, can be used for sourcing currents to a variety of sensors. The current range is from 100 µA to 1000 µA in steps of 100 µA.

Copyright © 2011–2016, Texas Instruments Incorporated

Feature Description (continued)

9.3.7 Signal Path

9.3.7.1 Reference Input (V_{REF})

The differential reference voltage V_{REF} (V_{REFP} – V_{REFN}) sets the range for V_{IN}.

The muxed V_{REF} allows the user to choose between V_{REF1} or V_{REF2} for each channel. This selection can be made by programming the V_{REF_SEL} bit in the CHx_INPUTCN registers (CHx_INPUTCN: V_{REF_SEL}). The default mode is V_{REF1}. If V_{REF2} is used, then V_{IN6} and V_{IN7} cannot be used as inputs because they share the same pin.

Refer to V_{REF} for V_{REF} applications information.

9.3.7.2 Flexible Input MUX (VIN)

LMP900xx provides a flexible input MUX as shown in Figure 43. The input that is digitized is V_{IN} = V_{INP} – V_{INN}; where V_{INP} and V_{INN} can be any available input.

The digitized input is also known as a channel, where CH = V_{IN} = V_{INP} – V_{INN}. Thus, there are a maximum of 4 differential channels: CH0, CH1, CH2, and CH3 for the LMP90080/LMP90079. The LMP90078/LMP90077 has 2 differential channels: CH0 and CH1 because it does not have the V_{IN3}, V_{IN4}, and V_{IN5} pins.

LMP900xx can also be configured single-ended, where the common ground is any one of the inputs. There are a maximum of 7 single-ended channels: CH0, CH1, CH2, CH3, CH4, CH5, and CH6 for the LMP90080/LMP90079 and 4: CH0, CH1, CH2, CH3 for the LMP90078/LMP90077.

The input MUX can be programmed in the CHx_INPUTCN registers. For example on the LMP90080, to program CH0 = V_{IN} = V_{IN4} – V_{IN1}, go to the CH0_INPUTCN register and set:

1. V_{INP} = 0x4
2. V_{INN} = 0x1

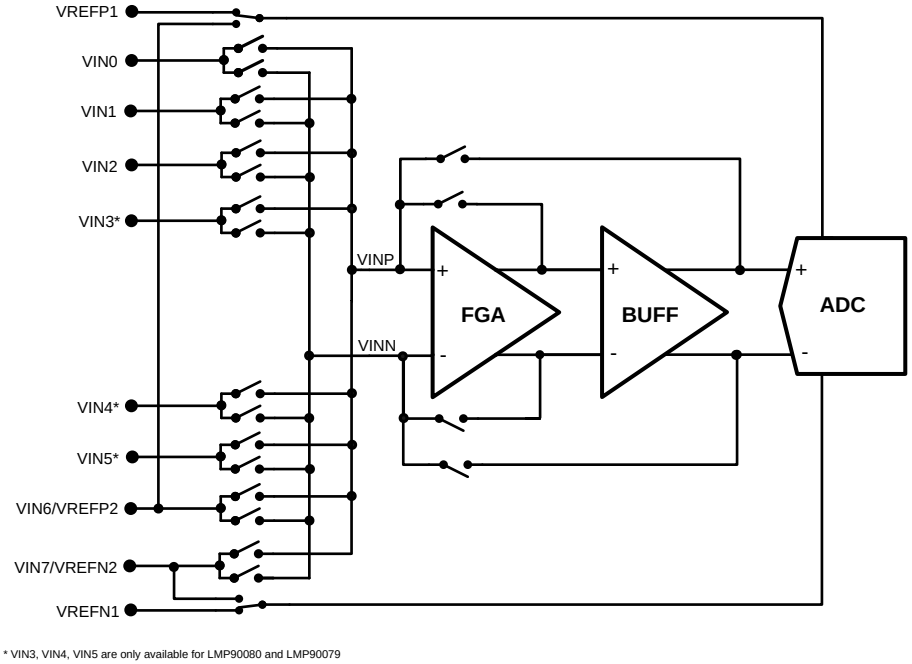

Figure 43. Simplified VIN Circuitry

Feature Description (continued)

9.3.7.3 Selectable Gains (FGA and PGA)

LMP900xx provides two types of gain amplifiers: a fixed gain amplifier (FGA) and a programmable gain amplifier (PGA). FGA has a fixed gain of 16x or it can be bypassed, while the PGA has programmable gain settings of 1x, 2x, 4x, or 8x.

Total gain is defined as FGA x PGA. Thus, LMP900xx provides gain settings of 1x, 2x, 4x, 8x, 16x, 32x, 64x, or 128x with true continuous background calibration.

The gain is channel specific, which means that one channel can have one gain, while another channel can have the same or a different gain.

The gain can be selected by programming the CHx_CONFIG: GAIN_SEL bits.

9.3.7.4 Buffer (BUFF)

There is an internal unity gain buffer that can be included or excluded from the signal path. Including the buffer provides a high input impedance but increases the power consumption.

When gain ≥ 16, the buffer is automatically included in the signal path. When gain < 16, including or excluding the buffer from the signal path can be done by programming the CHX_CONFIG: BUF_EN bit.

9.3.7.5 Internal/External CLK Selection

LMP900xx allows two clock options: internal CLK or external CLK (crystal (XTAL) or clock source).

There is an “External Clock Detection” mode, which detects the external XTAL if it is connected to XOUT and XIN. When operating in this mode, the LMP900xx shuts off the internal clock to reduce power consumption. Below is a flow chart to help set the appropriate clock registers.

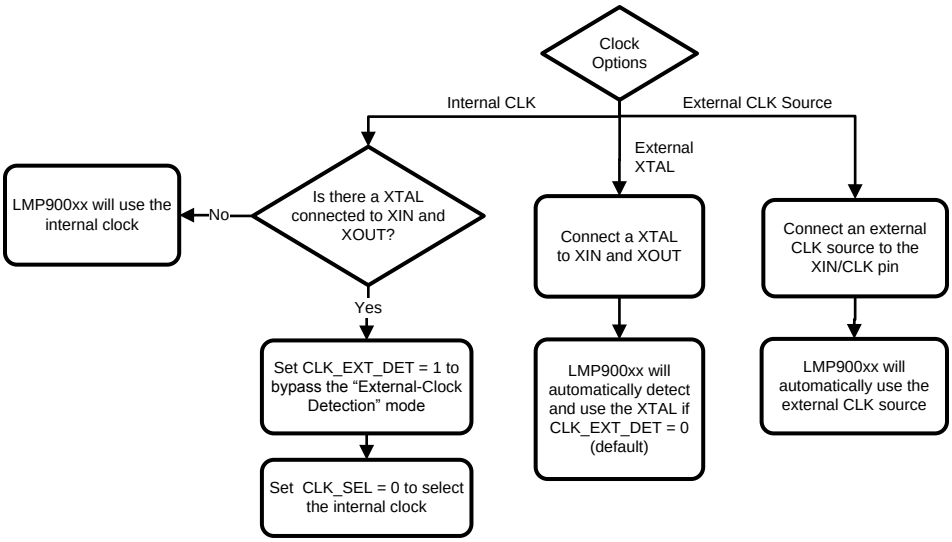

Figure 44. CLK Register Settings

The recommended value for the external CLK is discussed in the next sections.

Copyright © 2011–2016, Texas Instruments Incorporated

Feature Description (continued)

9.3.7.6 Programmable ODRS

If using the internal CLK or external CLK of 3.5717 MHz, then the output date rates (ODR) can be selected (using the ODR_SEL bit) as:

1. 13.42/8 = 1.6775 SPS
2. 13.42/4 = 3.355 SPS
3. 13.42/2 = 6.71SPS
4. 13.42 SPS
5. 214.65/8 = 26.83125 SPS
6. 214.65/4 = 53.6625 SPS
7. 214.65/2 = 107.325 SPS
8. 214.65 SPS (default)

If the internal CLK is not being used and the external CLK is not 3.5717 MHz, then the ODR will be different. If this is the case, use the equation below to calculate the new ODR values.

$$ODR_Base1 = (CLK_{EXT}) / (266{,}240) \quad (1)$$

$$ODR_Base2 = (CLK_{EXT}) / (16{,}640) \quad (2)$$

$$ODR1 = (ODR_Base1) / n, \text{ where } n = 1,2,4,8 \quad (3)$$

$$ODR2 = (ODR_Base2) / n, \text{ where } n = 1,2,4,8 \quad (4)$$

For example, a 3.6864 MHz XTAL or external clock has the following ODR values:

$$ODR_Base1 = (3.6864\ MHz) / (266{,}240) = 13.85\ SPS \quad (5)$$

$$ODR_Base2 = (3.6864\ MHz) / (16{,}640) = 221.54\ SPS \quad (6)$$

$$ODR1 = (13.85\ SPS) / n = 13.85, 6.92, 3.46, 1.73\ SPS \quad (7)$$

$$ODR2 = (221.54\ SPS) / n = 221.54, 110.77, 55.38, 27.69\ SPS \quad (8)$$

The ODR is channel specific, which means that one channel can have one ODR, while another channel can have the same or a different ODR.

Note that these ODRs are meant for a single channel conversion; the ODR needs to be divided by n for n channels scanning. For example, if the ADC were running at 214.65 SPS and four channels are being scanned, then the ODR per channel would be 214.65/4 = 53.6625 SPS.

9.3.7.7 Digital Filter

The LMP900xx has a fourth order rotated sinc filter that is used to configure various ODRs and to reject power supply frequencies of 50Hz and 60Hz. The 50/60 Hz rejection is only effective when the device is operating at ODR ≤ 13.42 SPS. If the internal CLK or the external CLK of 3.5717 MHz is used, then the LMP900xx will have the frequency response shown in Figure 45 through Figure 49.

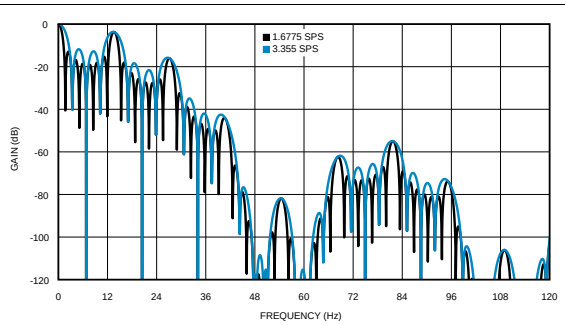

Figure 45. Digital Filter Response, 1.6775 SPS and 3.355 SPS

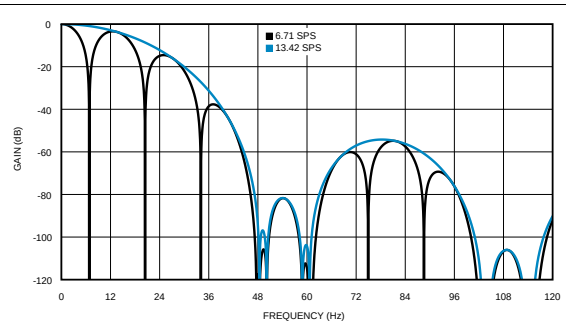

Figure 46. Digital Filter Response, 6.71 SPS and 13.42 SPS

Feature Description (continued)

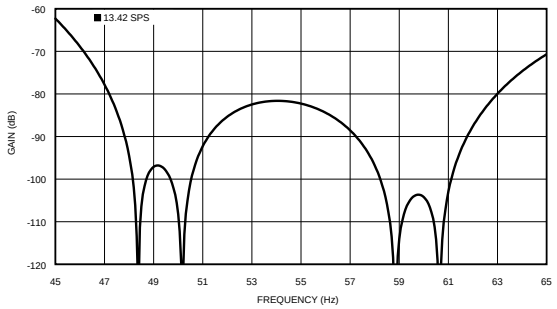

Figure 47. Digital Filter Response at 13.42 SPS

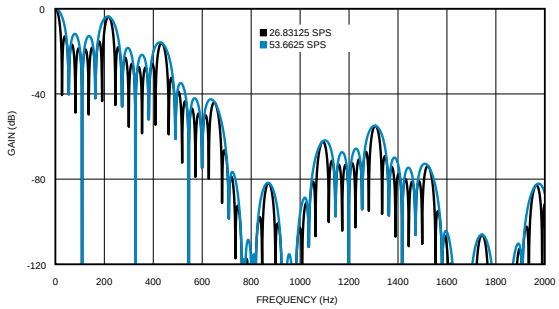

Figure 48. Digital Filter Response, 26.83125 SPS and 53.6625 SPS

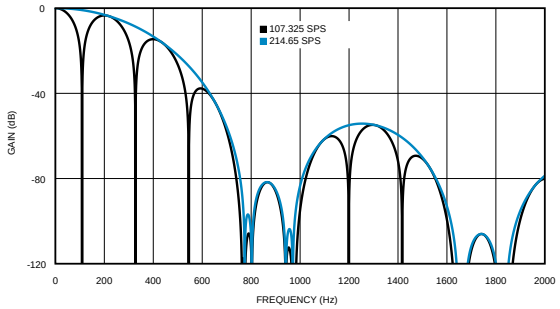

Figure 49. Digital Filter Response 107.325 SPS and 214.65 SPS

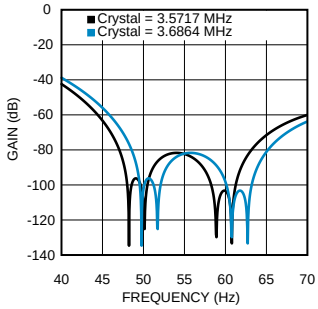

Figure 50. Digital Filter Response for a 3.5717 MHz Versus 3.6864 MHz XTAL

If the internal CLK is not being used and the external CLK is not 3.5717 MHz, then the filter response would be the same as the response shown above, but the frequency will change according to the equation:

$$f_{NEW} = [(CLK_{EXT}) / 256] \times (f_{OLD} / 13.952k) \quad (9)$$

Using Equation 9, an example of the filter response for a 3.5717 MHz XTAL versus a 3.6864 MHz XTAL can be seen in Figure 50.

9.3.7.8 GPIO (D0–D6)

Pins D0-D6 are general purpose input/output (GPIO) pins that can be used to control external LEDs or switches. Only a high or low value can be sourced to or read from each pin.

Figure 51 shows a flowchart how these GPIOs can be programmed.

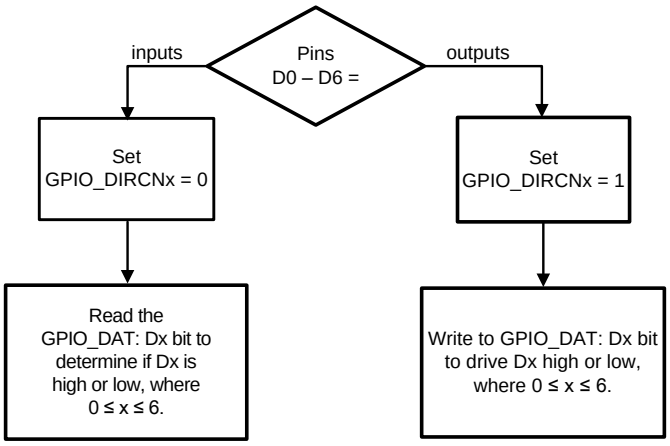

Figure 51. GPIO Register Settings

Copyright © 2011–2016, Texas Instruments Incorporated

9.4 Device Functional Modes

9.4.1 Channels Scan Mode

There are four scan modes. These scan modes are selected using the CH_SCAN: CH_SCAN_SEL bit. The first scanned channel is FIRST_CH, and the last scanned channel is LAST_CH; they are both located in the CH_SCAN register.

The CH_SCAN register is double buffered. That is, user inputs are stored in a slave buffer until the start of the next conversion during which time they are transferred to the master buffer. Once the slave buffer is written, subsequent updates are disregarded until a transfer to the master buffer happens. Hence, it may be appropriate to check the CH_SCAN_NRDY bit before programming the CH_SCAN register.

9.4.1.1 ScanMode0: Single-Channel Continuous Conversion

LMP900xx continuously converts the selected FIRST_CH.

Do not operate in this scan mode if gain ≥ 16 and the LMP900xx is running in background calibration modes BgcalMode1 or BgcalMode2. If this is the case, then it is more suitable to operate the device in ScanMode2 instead.

9.4.1.2 ScanMode1: Multiple-Channels Single Scan

LMP900xx converts one or more channels starting from FIRST_CH to LAST_CH, and then enters the stand-by state.

9.4.1.3 ScanMode2: Multiple-Channels Continuous Scan

LMP900xx continuously converts one or more channels starting from FIRST_CH to LAST_CH, and then it repeats this process.

9.4.1.4 ScanMode3: Multiple-Channels Continuous Scan with Burnout Currents

This mode is the same as ScanMode2 except that the burnout current is provided in a serially scanned fashion (injected in a channel after it has undergone a conversion). Thus it avoids burnout current injection from interfering with the conversion result for the channel.

The sensor diagnostic burnout currents are available for all four scan modes. The burnout current is further gated by the BURNOUT_EN bit for each channel. ScanMode3 is the only mode that scans multiple channels while injecting burnout currents without interfering with the signal. This is described in details in *Burnout Currents*.

9.4.2 Sensor Interface

The LMP90080/LMP90078 contains two excitation currents (IB1 & IB2) for sourcing external sensors, and the LMP900xx contain two burnout currents for sensor diagnostics. They are described in the next sections.

9.4.2.1 IB1 & IB2 - Excitation Currents (LMP90080/LMP90078)

IB1 and IB2 can be used for providing currents to external sensors, such as RTDs or bridge sensors. 100µA to 1000µA, in steps of 100µA, can be sourced by programming the ADC_AUXCN: RTD_CUR_SEL bits.

Refer to 3–Wire RTD to see how IB1 and IB2 can be used to source a 3-wire RTD.

Copyright © 2011–2016, Texas Instruments Incorporated

Device Functional Modes (continued)

9.4.2.2 Burnout Currents

As shown in Figure 52, the LMP900xx contains two internal 10 µA burnout current sources, one sourcing current from V_A to V_{INP}, and the other sinking current from V_{INN} to ground. These currents are used for sensor diagnostics and can be enabled for each channel using the CHx_INPUTCN: BURNOUT_EN bit.

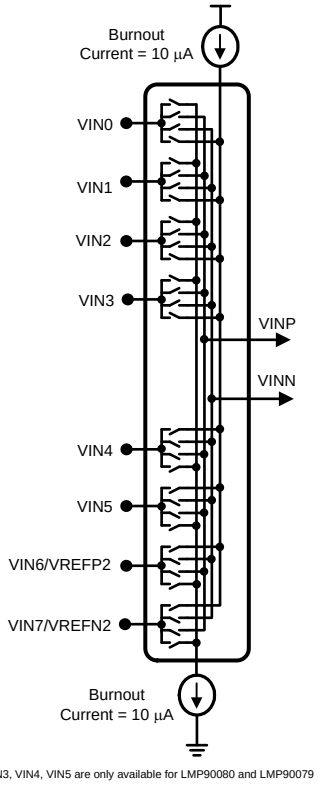

Figure 52. Burnout Currents

9.4.2.2.1 Burnout Current Injection

Burnout currents are injected differently depending on the channel scan mode selected.

When BURNOUT_EN = 1 and the device is operating in ScanMode0, 1, or 2, the burnout currents are injected into all the channels for which the BURNOUT_EN bit is selected. This will cause problems and hence in this mode, more than one channel should not have its BURNOUT_EN bit selected. Also, the burnout current will interfere with the signal and introduce a fixed error depending on the particular external sensor.

When BURNOUT_EN = 1 and the device is operating in ScanMode3, burnout currents are injected into the last sampled channel on a cyclical basis (Figure 53). In this mode, burnout currents injection is truly done in the background without affecting the accuracy of the on-going conversion. Operating in this mode is recommended.

Copyright © 2011–2016, Texas Instruments Incorporated

Device Functional Modes (continued)

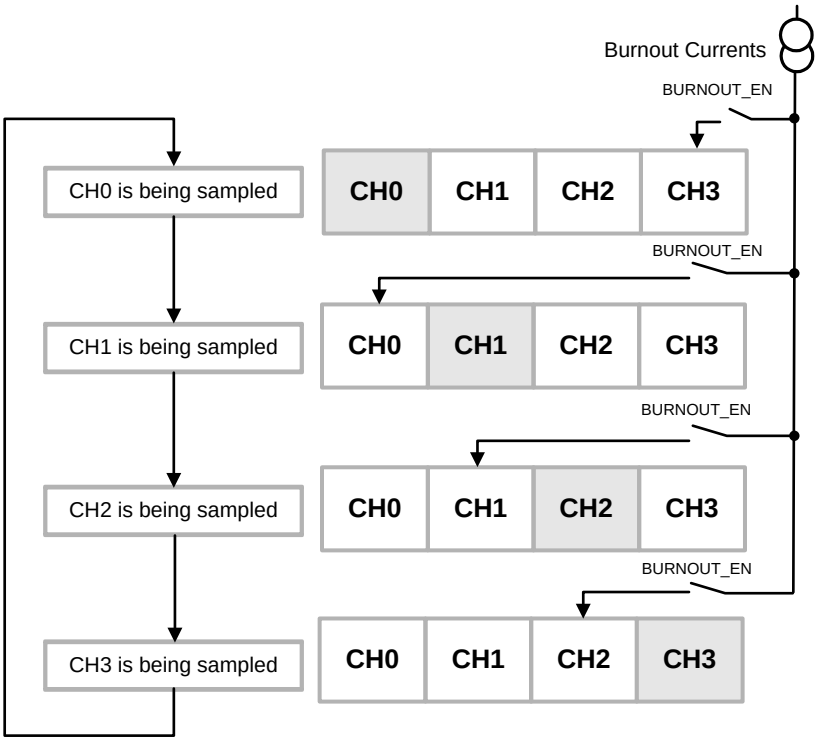

Figure 53. Burnout Currents Injection for Scanmode3

9.4.2.3 Sensor Diagnostic Flags

Burnout currents can be used to verify that an external sensor is still operational before attempting to make measurements on that channel. A non-operational sensor means that there is a possibility the connection between the sensor and the LMP900xx is open circuited, short circuited, shorted to V_A or GND, overloaded, or the reference may be absent. The sensor diagnostic flags diagram can be seen in Figure 54.

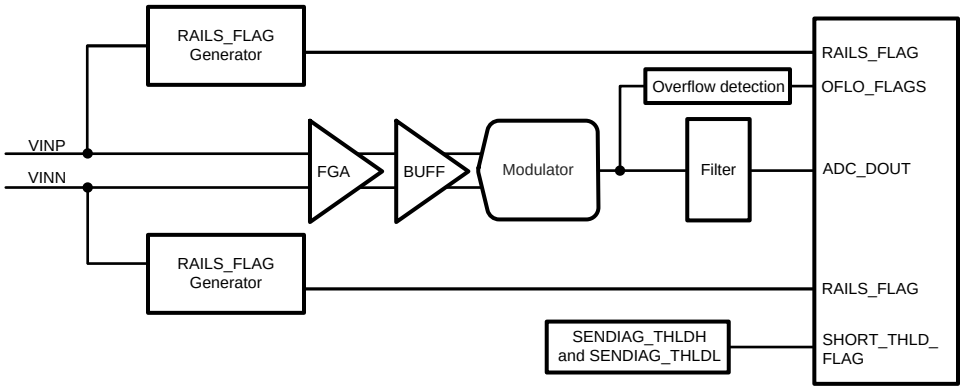

Figure 54. Sensor Diagnostic Flags Diagram

The sensor diagnostic flags are located in the SENDIAG_FLAGS register and are described in further details below.

Device Functional Modes (continued)

9.4.2.3.1 SHORT_THLD_FLAG

The short circuit threshold flag is used to report a short-circuit condition. It is set when the output voltage (V_{OUT}) is within the absolute $V_{threshold}$. $V_{threshold}$ can be programmed using the 8-bit SENDIAG_THLDH register.

For example, assume V_{REF} = 5V, gain = 1, SENDIAG_THLD = 0xDA (218d). In this case, $V_{threshold}$ can be calculated as:

$$V_{threshold} = [(SENDIAG_THLD)(2)(V_{REF})] / [(Gain)(2^{16})] \quad (10)$$

$$V_{threshold} = [(218)(2)(5V)] / [(1)(2^{16})] \quad (11)$$

$$V_{threshold} = 33.3\ mV \quad (12)$$

When (-33.3mV) ≤ V_{OUT} ≤ (33.3mV), then SHORT_THLD_FLAG = 1; otherwise, SHORT_THLD_FLAG = 0.

9.4.2.3.2 RAILS_FLAG

The rails flag is used to detect if one of the sampled channels is within 50mV of the rails potential (V_A or V_{SS}). This can be further investigated to detect an open-circuit or short-circuit condition. If the sampled channel is near a rail, then RAILS_FLAG = 1; otherwise, RAILS_FLAG = 0.

9.4.2.3.3 POR_AFT_LST_RD

If POR_AFT_LST_READ = 1, then there was a power-on reset since the last time the SENDIAG_FLAGS register was read. This flag's status is cleared when this bit is read, unless this bit is set again on account of another power-on-reset event in the intervening period.

9.4.2.3.4 OFLO_FLAGS

OFLO_FLAGS is used to indicate whether the modulator is over-ranged or under-ranged. The following conditions are possible:

1. OFLO_FLAGS = 0x0: Normal Operation
2. OFLO_FLAGS = 0x1: The differential input is more than (±V_{REF}/Gain) but is not more than ±(1.3*V_{REF}/Gain) to cause a modulator over-range.
3. OFLO_FLAGS = 0x2: The modulator was over-ranged towards +V_{REF}/Gain.
4. OFLO_FLAGS = 0x3: The modulator was over-ranged towards −V_{REF}/Gain.

The condition of OFLO_FLAGS = 10b or 11b can be used in conjunction with the RAILS_FLAG to determine the fault condition.

9.4.2.3.5 SAMPLED_CH

These three bits show the channel number for which the ADC_DOUT and SENDIAG_FLAGS are available. This does not necessarily indicate the current channel under conversion because the conversion frame and computation of results from the channels are pipelined. That is, while the conversion is going on for a particular channel, the results for the previous conversion (of the same or a different channel) are available.

9.5 Programming

9.5.1 Serial Digital Interface

A synchronous 4-wire serial peripheral interface (SPI) provides access to the internal registers of LMP900xx via CSB, SCLK, SDI, SDO/DRDYB.

9.5.1.1 Register Address (ADDR)

All registers are memory-mapped. A register address (ADDR) is composed of an upper register address (URA) and lower register address (LRA) as shown in Table 5. For example, ADDR 0x3A has URA=0x3 and LRA=0xA.

Table 5. ADDR Map

BIT	[6:4]	[3:0]
Name	URA	LRA

Copyright © 2011–2016, Texas Instruments Incorporated

9.5.1.2 Register Read/Write Protocol

Figure 55 shows the protocol how to write to or read from a register.

Transaction 1 sets up the upper register address (URA) where the user wants to start the register-write or register-read.

Transaction 2 sets the lower register address (LRA) and includes the Data Byte(s), which contains the incoming data from the master or outgoing data from the LMP900xx.

Examples of register-reads or register-writes can be found in *Register Read/Write Examples*.

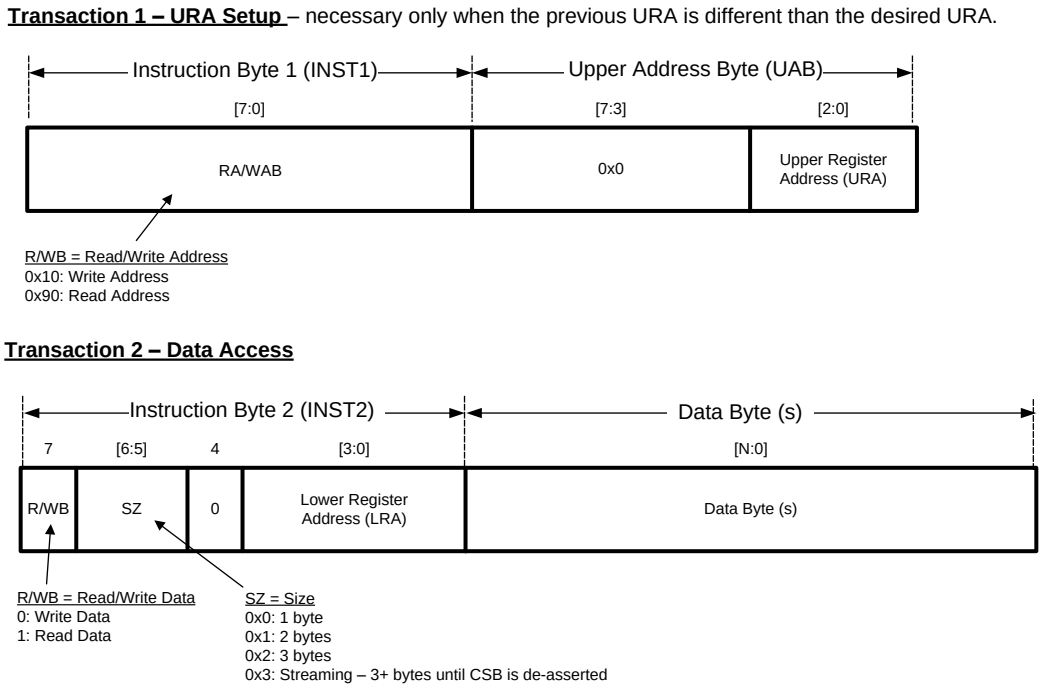

Figure 55. Register Read/Write Protocol

9.5.1.3 Streaming

When writing/reading 3+ bytes, the user must operate the device in Normal Streaming mode or Controlled Streaming mode. In the Normal Streaming mode, which is the default mode, data runs continuously starting from ADDR until CSB deasserts. This mode is especially useful when programming all the configuration registers in a single transaction. See the *Normal Streaming Example* section for an example of the Normal Streaming mode.

In the Controlled Streaming mode, data runs continuously starting from ADDR until the data has run through all (STRM_RANGE + 1) registers. For example, if the starting ADDR is 0x1C, STRM_RANGE = 5, then data will be written to or read from the following ADDRs: 0x1C, 0x1D, 0x1E, 0x1F, 0x20, 0x21. Once the data reaches ADDR 0x21, LMP900xx will wrap back to ADDR 0x1C and repeat this process until CSB deasserts. See the *Controlled Streaming Example* section for an example of the Controlled Streaming mode.

If streaming reaches ADDR 0x7F, then it will wrap back to ADDR 0x00. Furthermore, reading back the Upper Register Address after streaming will report the Upper Register Address at the start of streaming, not the Upper Register Address at the end of streaming.

To stream, write 0x3 to INST2's SZ bits as seen in Figure 55. To select the stream type, program the SPI_STREAMCN: STRM_TYPE bit. The STRM_RANGE can also be programmed in the same register.

Copyright © 2011–2016, Texas Instruments Incorporated

9.5.1.4 CSB – Chip Select Bar

An SPI transaction begins when the master asserts (active low) CSB and ends when the master deasserts (active high) CSB. Each transaction might be separated by a subsequent one with a CSB deassertion, but this is optional. Once CSB is asserted, it must not pulse (deassert and assert again) during a (desired) transaction.

CSB can be grounded in systems where LMP900xx is the only SPI slave. This frees the software from handling the CSB. Care has to be taken to avoid any false edge on SCLK, and while operating in this mode, the streaming transaction should not be used because exiting from this mode can only be done through a CSB deassertion.

9.5.1.5 SPI Reset

SPI Reset resets the SPI-Protocol State Machine by monitoring the SDI for at least 73 consecutive 1's at each SCLK rising edge. After an SPI Reset, SDI is monitored for a possible Write Instruction at each SCLK rising edge.

SPI Reset will reset the Upper Address Register (URA) to 0, but the register contents are not reset.

By default, SPI reset is disabled, but it can be enabled by writing 0x01 to SPI Reset Register (ADDR 0x02).

9.5.1.6 DRDYB - Data Ready Bar

DRDYB is a signal generated by the LMP900xx that indicates a fresh conversion data is available in the ADC_DOUT registers.

DRDYB is automatically asserted every (1/ODR) second as seen in Figure 56. Before the next assertion, DRDYB will pulse for t_{DRDYB} second. The value for t_{DRDYB} can be found in Timing Requirements.

Figure 56. DRDYB Behavior

If ADC_DOUT is being read while a new ADC_DOUT becomes available, then the ADC_DOUT that is being read is still valid (Figure 57). DRDYB will still be deasserted every 1/ODR second, but a consecutive read on the ADC_DOUT register will fetch the newly converted data available.

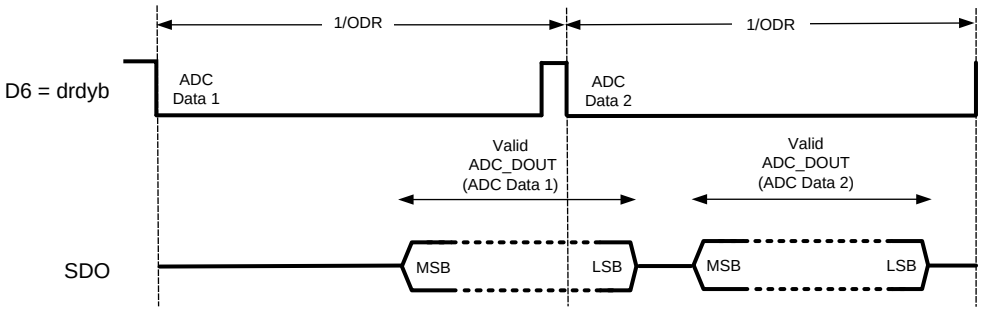

Figure 57. DRDYB Behavior For An Incomplete ADC_DOUT Reading

DRDYB can also be accessed via registers using the DT_AVAIL_B bit. This bit indicates when fresh conversion data is available in the ADC_DOUT registers. If new conversion data is available, then DT_AVAIL_B = 0; otherwise, DT_AVAIL_B = 1.

A complete reading for DT_AVAIL_B occurs when the MSB of ADC_DOUTH is read out. This bit cannot be reset even if REG_AND_CNV_RST = 0xC3.

Copyright © 2011–2016, Texas Instruments Incorporated

9.5.1.6.1 DrdybCase1: Combining SDO/DRDYB with SDO_DRDYB_DRIVER = 0x00

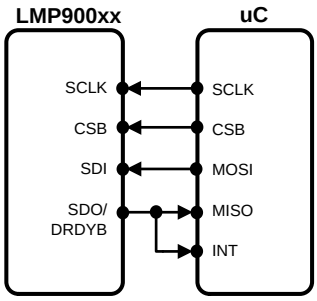

Figure 58. DrdybCase1 Connection Diagram

As shown in Figure 58, the DRDYB signal and SDO can be multiplexed on the same pin as their functions are mostly complementary. In fact, this is the default mode for the SDO/DRDYB pin.

Figure 59 shows a timing protocol for DrdybCase1. In this case, start by asserting CSB first to monitor a DRDYB assertion. When the DRDYB signal asserts, begin writing the Instruction Bytes (INST1, UAB, INST2) to read from or write to registers. Note that INST1 and UAB are omitted from the figure below because this transaction is only required if a new UAB needs to be implemented.

While the CSB is asserted, DRDYB is driving the SDO/DRDYB pin unless the device is reading data, in which case, SDO will be driving the pin. If CSB is deasserted, then the SDO/DRDYB pin is High-Z.

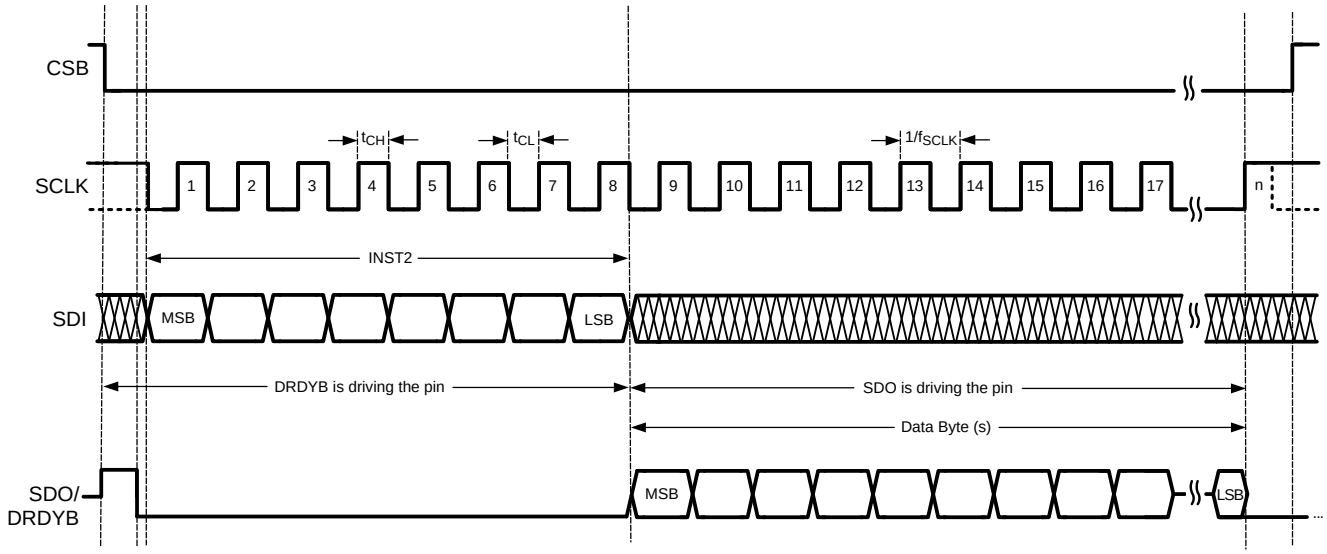

Figure 59. Timing Protocol for DrdybCase1

9.5.1.6.2 DrdybCase2: Combining SDO/DRDYB with SDO_DRDYB_DRIVER = 0x03

SDO/DRDYB can be made independent of CSB by setting SDO_DRDYB_DRIVER = 0x03 in the SPI Handshake Control register. In this case, DRDYB will drive the pin unless the device is reading data, independent of the state of CSB. SDO will drive the pin when CSB is asserted and the device is reading data.

With this scheme, one can use SDO/DRDYB as a true interrupt source, independent of the state of CSB. But this scheme can only be used when the LMP900xx is the only device connected to the master's SPI bus because the SDO/DRDYB pin will be DRDYB even when CSB is deasserted.

The timing protocol for this case can be seen in Figure 60. When DRDYB asserts, assert CSB to start the SPI transaction and begin writing the Instruction Bytes (INST1, UAB, INST2) to read from or write to registers.

Copyright © 2011–2016, Texas Instruments Incorporated

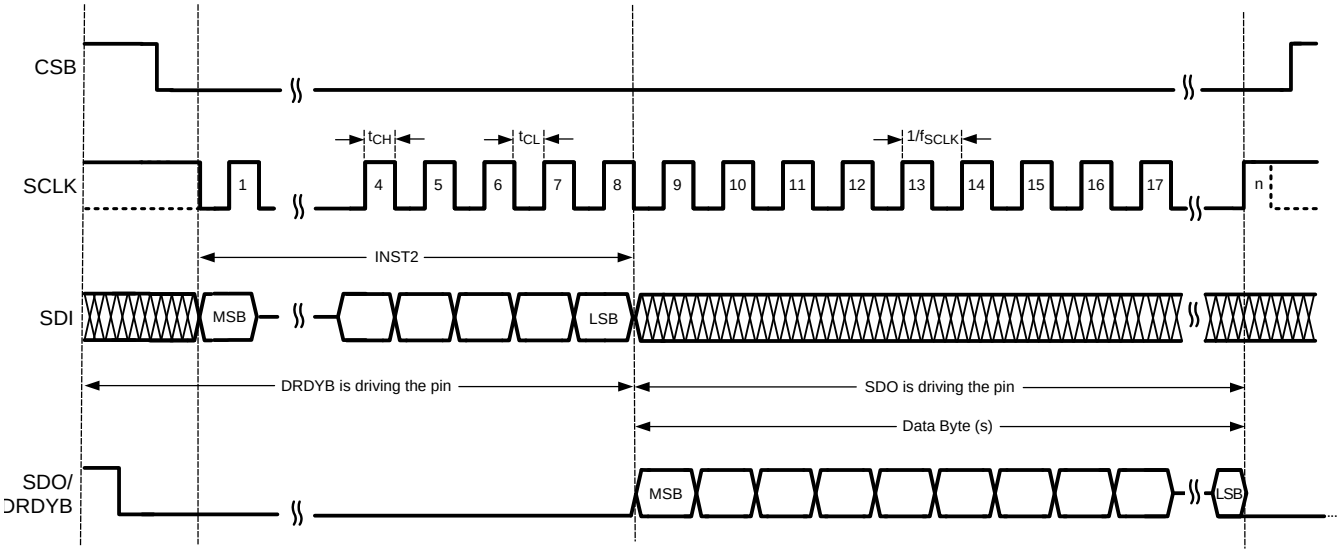

Figure 60. Timing Protocol For DrdybCase2

9.5.1.6.3 DrdybCase3: Routing DRDYB to D6

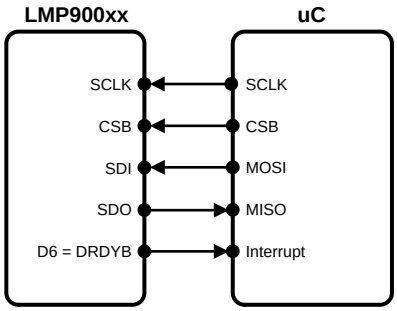

Figure 61. DrdybCase3 Connection Diagram

The DRDYB signal can be routed to pin D6 by setting SPI_DRDYB_D6 high and SDO_DRDYB_DRIVER to 0x4. This is the behavior for DrdybCase3 as shown in Figure 61.

The timing protocol for this case can be seen in Figure 62. Since DRDYB is separated from SDO, it can be monitored using the interrupt or polling method. If polled, the DRDYB signal needs to be polled faster than t_{DRDYB} to detect a DRDYB assertion. When DRDYB asserts, assert CSB to start the SPI transaction and begin writing the Instruction Bytes (INST1, UAB, INST2) to read from or write to registers.

Copyright © 2011–2016, Texas Instruments Incorporated

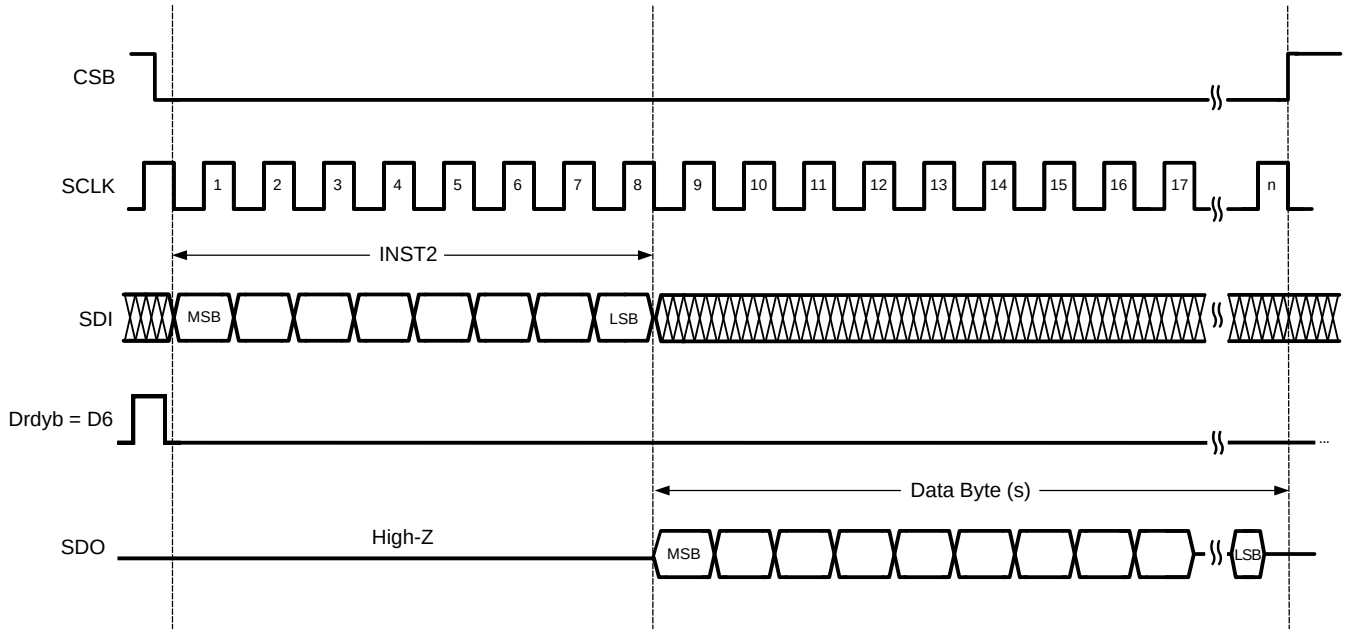

Figure 62. Timing Protocol for DrdybCase3

9.5.1.7 Data Only Read Transaction

In a data only read transaction, one can directly access the data byte(s) as soon as the CSB is asserted without having to send any instruction byte. This is useful as it brings down the latency as well as the overhead associated with the instruction byte (as well as the Upper Address Byte, if any).

In order to use the data only transaction, the device must be placed in the data first mode. The following table lists transaction formats for placing the device in and out of the data first mode and reading the mode status.

Table 6. Data First Mode Transactions

	BIT[7]	BITS[6:5]	BIT[4]	BITS[3:0]	DATA BYTES
Enable Data First Mode Instruction	1	11	1	1010	None
Disable Data First Mode Instruction	1	11	1	1011	None
Read Mode Status Transaction	1	00	1	1111	One

Note that while being in the data first mode, once the data bytes in the data only read transaction are sent out, the device is ready to start on any normal (non-data-only) transaction including the Disable Data First Mode Instruction. The current status of the data first mode (enabled/disabled status) can be read back using the Read Mode Status Transaction. This transaction consists of the Read Mode Status Instruction followed by a single data byte (driven by the device). The data first mode status is available on bit [1] of this data byte.

The data only read transaction allows reading up to eight consecutive registers, starting from any start address. Usually, the start address will be the address of the most significant byte of conversion data, but it could just as well be any other address. The start address and number of bytes to be read during the data only read transaction can be programmed using the DATA_ONLY_1 AND DATA_ONLY_2 registers respectively.

The upper register address is unaffected by a data only read transaction. That is, it retains its setting even after encountering a data only transaction. The data only transaction uses its own address (including the upper address) from the DATA_ONLY_1 register. When in the data first mode, the SCLK must stop high before entering the Data Only Read Transaction; this transaction should be completed before the next scheduled DRDYB deassertion.

Copyright © 2011–2016, Texas Instruments Incorporated

9.5.1.8 Cyclic Redundancy Check (CRC)

CRC can be used to ensure integrity of data read from LMP900xx. To enable CRC, set EN_CRC high. Once CRC is enabled, the CRC value is calculated and stored in SPI_CRC_DAT so that the master device can periodically read for data comparison. The CRC is automatically reset when CSB or DRDYB is deasserted.

The CRC polynomial is $x^8 + x^5 + x^4 + 1$. The reset value of the SPI_CRC_DAT register is zero, and the final value is ones-complemented before it is sent out. Note that CRC computation only includes the bits sent out on SDO and does not include the bits of the SPI_CRC_DAT itself; thus it is okay to read SPI_CRC_DAT repeatedly.

The DRDYB signal normally deasserts (active high) every 1/ODR second. However, this behavior can be changed so that DRDYB deassertion can occur after SPI_CRC_DAT is read, but not later than normal DRDYB deassertion which occurs at every 1/ODR seconds. This is done by setting bit DRDYB_AFT_CRC high.

The timing protocol for CRC can be found in Figure 63.

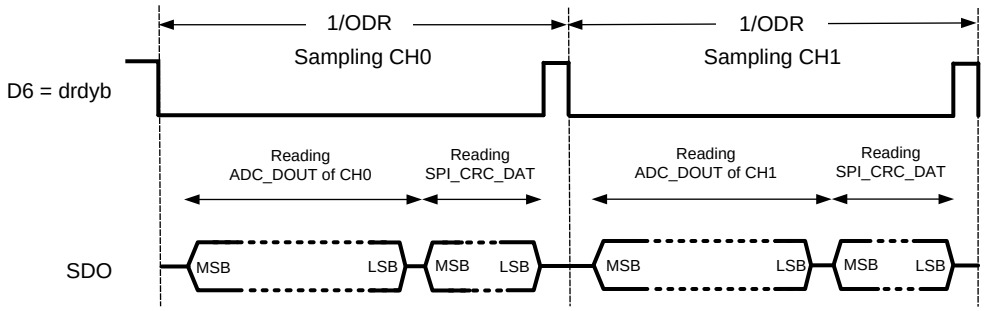

Figure 63. Timing Protocol for Reading SPI_CRC_DAT

If SPI_CRC_DAT read extends beyond the normal DRDYB deassertion at every 1/ODR seconds, then CRC_RST has to be set in the SPI Data Ready Bar Control Register. This is done to avoid a CRC reset at the DRDYB deassertion. Timing protocol for reading CRC with CRC_RST set is shown in Figure 64.

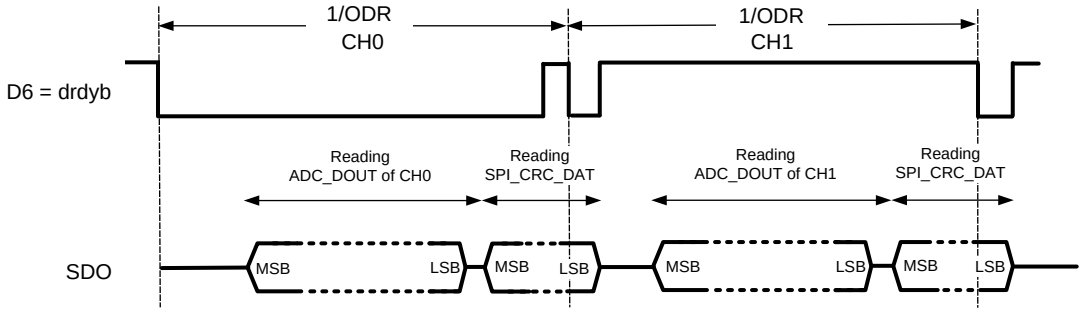

Figure 64. Timing Protocol for Reading SPI_CRC_DAT Beyond Normal DRDYB Deassertion at Every 1/ODR Seconds

Follow the steps below to enable CRC:

1. Set SPI_CRC_CN = 1 (register 0x13, bit 4) to enable CRC.
2. Set DRDYB_AFT_CRC = 1 (register 0x13, bit 2) to dessert the DRDYB after CRC.
3. Compute the CRC externally, which should include ADC_DOUTH and ADC_DOUTL.
4. Collect the data and verify the reported CRC matches with the computed CRC (step above).

Copyright © 2011–2016, Texas Instruments Incorporated

9.5.2 RESET and RESTART

Writing 0xC3 to the REG_AND_CNV_RST field will reset the conversion and most of the programmable registers to their default values. The only registers that will not be reset are the System Calibration Registers (CHx_SCAL_OFFSET, CHx_SCAL_GAIN) and the DT_AVAIL_B bit.

If it is desirable to reset the System Calibration Coefficient Registers, then set RESET_SYSCAL = 1 before writing 0xC3 to REG_AND_CNV_RST. If the device is operating in the "System Calibration Offset/Gain Coefficient Determination" mode (SCALCN register), then write REG_AND_CNV_RST = 0xC3 twice to get out of this mode.

After a register reset, any on-going conversions will be aborted and restarted. If the device is in the power-down state, then a register reset will bring it out of the power-down state.

To restart a conversion, write 1 to the RESTART bit. This bit can be used to synchronize the conversion to an external event.

After a restart conversion, the first sample is not valid. To restart with a valid first sample, issue a stand-by command followed by an active command.

9.5.3 Register Read/Write Examples

9.5.3.1 Writing to Register Examples

Using the register read/write protocol shown in Figure 55, the following example shows how to write three data bytes starting at register address (ADDR) 0x1F. After the last byte has been written to ADDR 0x21, deassert CSB to end the register-write.

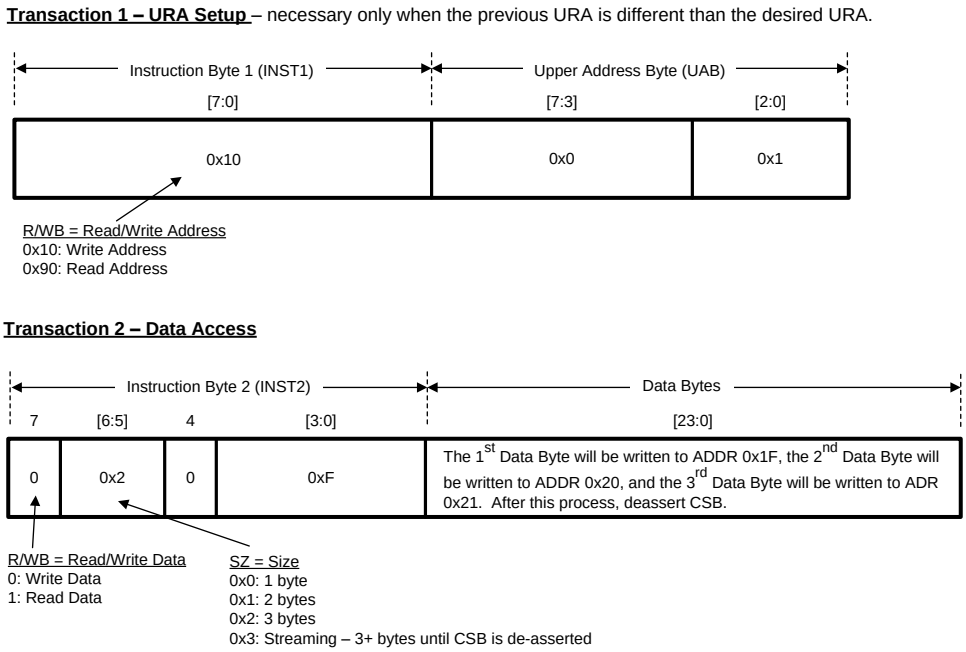

Figure 65. Register-Write Example 1

The next example shows how to write one data byte to ADDR 0x12. Since the URA for this example is the same as the last example, transaction 1 can be omitted.

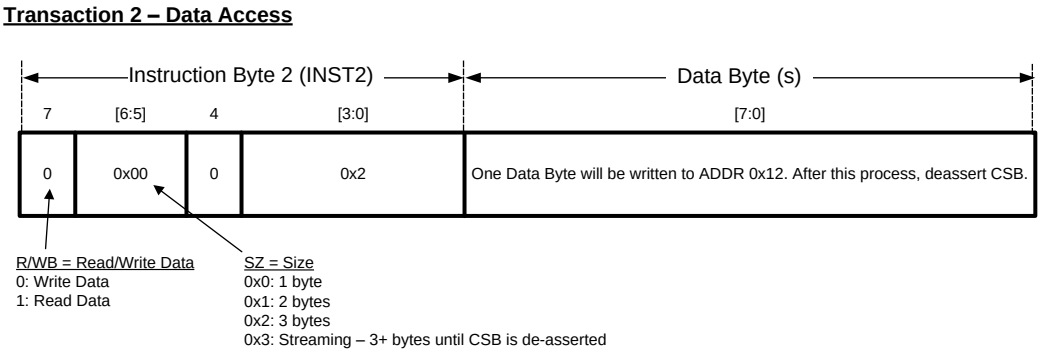

Figure 66. Register-Write Example 2

9.5.3.2 Reading from Register Example

The following example shows how to read two bytes. The first byte will be read from starting ADDR 0x24, and the second byte will be read from ADDR 0x25.

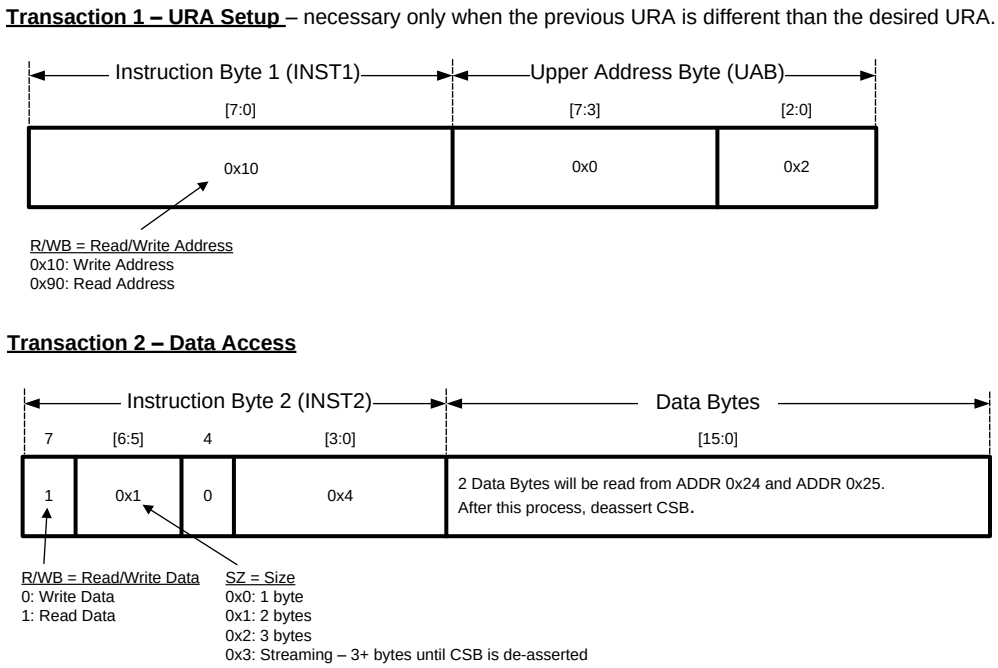

Figure 67. Register-Read Example

Copyright © 2011–2016, Texas Instruments Incorporated

9.5.4 Streaming Examples

9.5.4.1 Normal Streaming Example

This example shows how to write six data bytes starting at ADDR 0x28 using the Normal Streaming mode. Because the default STRM_TYPE is the Normal Streaming mode, setting up the SPI_STREAMCN register can be omitted.

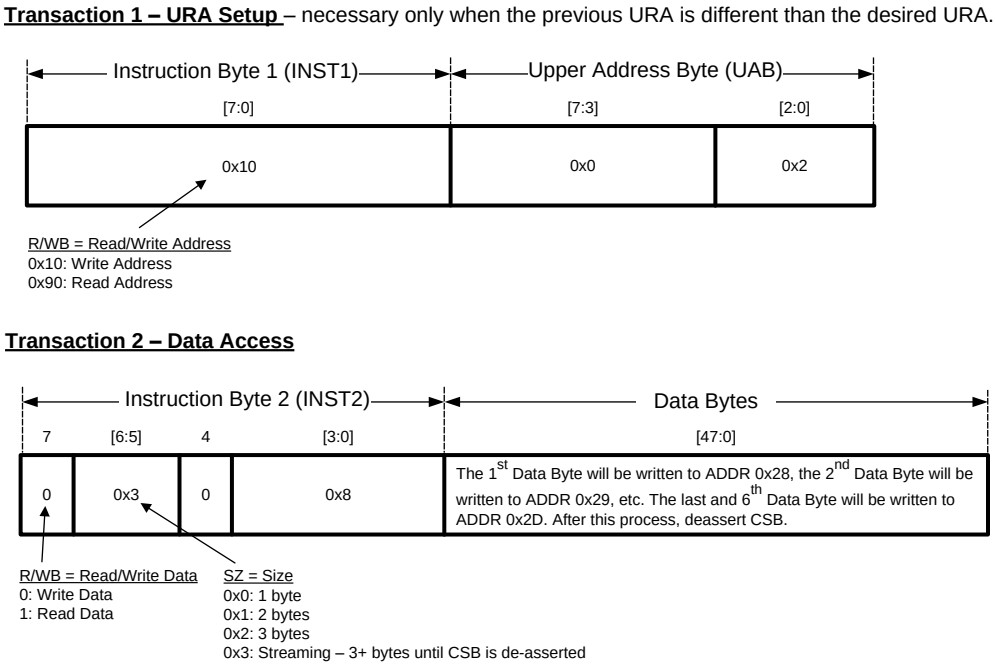

Figure 68. Normal Streaming Example

9.5.4.2 Controlled Streaming Example

This example shows how to read the 16-bit conversion data (ADC_DOUT) four times using the Controlled Streaming mode. The ADC_DOUT registers consist of ADC_DOUTH at ADDR 0x1A and ADC_DOUTL at ADDR 0x1B.

The first step (Figure 69) sets up the SPI_STREAMCN register. This step enters the Controlled Streaming mode by setting STRM_TYPE high in ADDR 0x03. Since two registers (ADDR 0x1A - 0x1B) need to be read, the STRM_RANGE is 1.

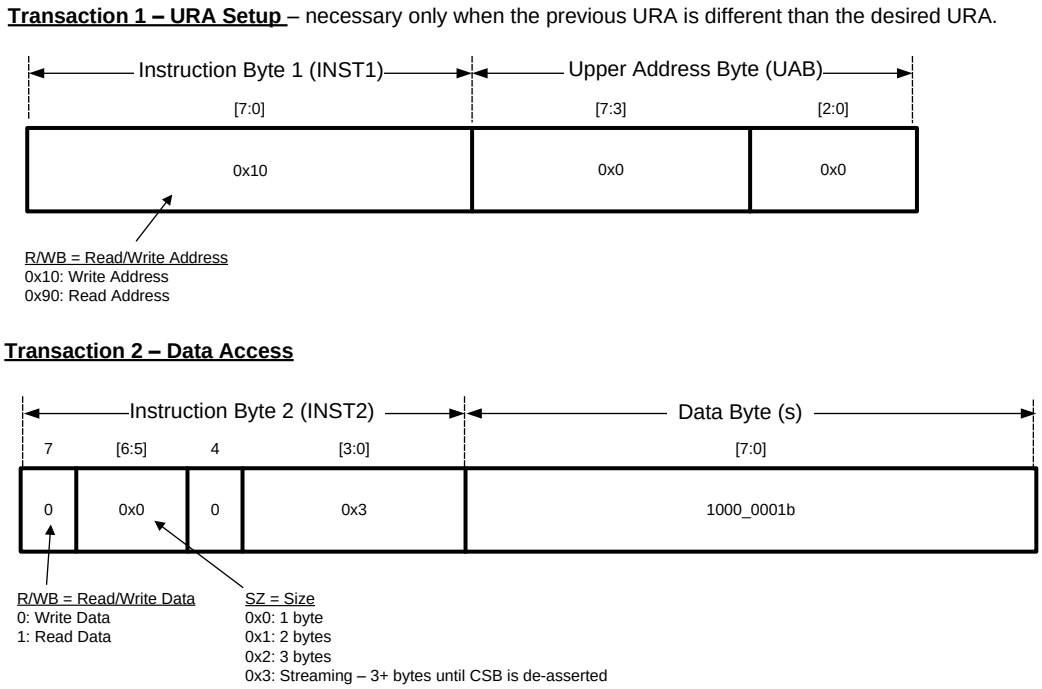

Figure 69. Setting Up SPI_STREAMCN

The next step shows how to perform the Controlled Streaming mode so that the master device will read ADC_DOUT from ADDR 0x1A and 0x1B, then wrap back to ADDR 0x1A, and repeat this process for four times. After this process, deassert CSB to end the Controlled Streaming mode.

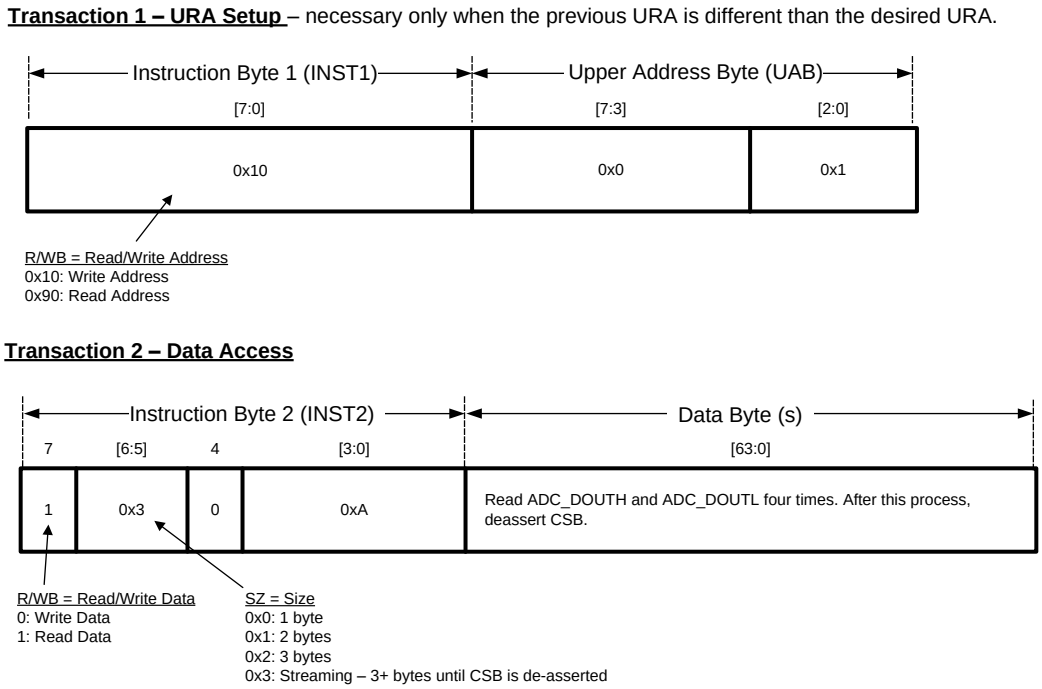

Figure 70. Controlled Streaming Example

Copyright © 2011–2016, Texas Instruments Incorporated

9.6 Register Maps

1. If written to, RESERVED bits must be written to only 0 unless otherwise indicated.
2. Read back value of RESERVED bits and registers is unspecified and should be discarded.
3. Recommended values must be programmed and forbidden values must not be programmed where they are indicated in order to avoid unexpected results.
4. If written to, registers indicated as Reserved must have the indicated default value as shown below. Any other value can cause unexpected results.

Table 7. Register Map

REGISTER NAME		ADDR (URA & LRA)	TYPE	DEFAULT
RESETCN	Reset Control	0x00	WO	-
SPI_HANDSHAKECN	SPI Handshake Control	0x01	R/W	0x00
SPI_RESET	SPI Reset Control	0x02	R/W	0x00
SPI_STREAMCN	SPI Stream Control	0x03	R/W	0x00
Reserved	-	0x04 - 0x07	-	0x00
PWRCN	Power Mode Control and Status	0x08	RO & WO	0x00
DATA_ONLY_1	Data Only Read Control 1	0x09	R/W	0x1A
DATA_ONLY_2	Data Only Read Control 2	0x0A	R/W	0x02
ADC_RESTART	ADC Restart Conversion	0x0B	WO	-
Reserved	-	0x0C - 0x0D	-	0x00
GPIO_DIRCN	GPIO Direction Control	0x0E	R/W	0x00
GPIO_DAT	GPIO Data	0x0F	RO & WO	-
BGCALCN	Background Calibration Control	0x10	R/W	0x00
SPI_DRDYBCN	SPI Data Ready Bar Control	0x11	R/W	0x03
ADC_AUXCN	ADC Auxiliary Control	0x12	R/W	0x00
SPI_CRC_CN	CRC Control	0x13	R/W	0x02
SENDIAG_THLD	Sensor Diagnostic Threshold	0x14	R/W	0x00
Reserved	-	0x15-0x16	-	0x0000
SCALCN	System Calibration Control	0x17	R/W	0x00
ADC_DONE	ADC Data Available	0x18	RO	-
SENDIAG_FLAGS	Sensor Diagnostic Flags	0x19	RO	-
ADC_DOUT	Conversion Data 1 and 0	0x1A - 0x1B	RO	-
Reserved	-	0x1C	-	-
SPI_CRC_DAT	CRC Data	0x1D	RO & WO	-
CHANNEL CONFIGURATION REGISTERS (CH4 to CH6 for LMP90080/LMP90079 only)				
CH_STS	Channel Status	0x1E	RO	0x00
CH_SCAN	Channel Scan Mode	0x1F	R/W	0x30
CH0_INPUTCN	CH0 Input Control	0x20	R/W	0x01
CH0_CONFIG	CH0 Configuration	0x21	R/W	0x70
CH1_INPUTCN	CH1 Input Control	0X22	R/W	0x13
CH1_CONFIG	CH1 Configuration	0x23	R/W	0x70
CH2_INPUTCN	CH2 Input Control	0x24	R/W	0x25
CH2_CONFIG	CH2 Configuration	0x25	R/W	0x70
CH3_INPUTCN	CH3 Input Control	0x26	R/W	0x37
CH3_CONFIG	CH3 Configuration	0x27	R/W	0x70
CH4_INPUTCN	CH4 Input Control	0x28	R/W	0x01
CH4_CONFIG	CH4 Configuration	0x29	R/W	0x70
CH5_INPUTCN	CH5 Input Control	0x2A	R/W	0x13
CH5_CONFIG	CH5 Configuration	0x2B	R/W	0x70
CH6_INPUTCN	CH6 Input Control	0x2C	R/W	0x25

Copyright © 2011–2016, Texas Instruments Incorporated

Register Maps (continued)

Table 7. Register Map (continued)

REGISTER NAME		ADDR (URA & LRA)	TYPE	DEFAULT
CH6_CONFIG	CH6 Configuration	0x2D	R/W	0x70
Reserved	-	0x2E - 0x2F	-	0x00
SYSTEM CALIBRATION REGISTERS				
CH0_SCAL_OFFSET	CH0 System Calibration Offset Coefficients	0x30 - 0x31	R/W	0x0000
Reserved	-	0x32	-	0x00
CH0_SCAL_GAIN	CH0 System Calibration Gain Coefficients	0x33 - 0x34	R/W	0x8000
Reserved	-	0x35	-	0x00
CH0_SCAL_SCALING	CH0 System Calibration Scaling Coefficients	0x36	R/W	0x01
CH0_SCAL_BITS_ SELECTOR	CH0 System Calibration Bit Selector	0x37	R/W	0x00
CH1_SCAL_OFFSET	CH1 System Calibration Offset Coefficients	0x38 - 0x39	R/W	0x0000
Reserved	-	0x3A	-	0x00
CH1_SCAL_GAIN	CH1 System Calibration Gain Coefficient	0x3B - 0x3C	R/W	0x8000
Reserved	-	0x3D	-	0x00
CH1_SCAL_SCALING	CH1 System Calibration Scaling Coefficients	0x3E	R/W	0x01
CH1_SCAL_BITS_SELECT OR	CH1 System Calibration Bit Selector	0x3F	R/W	0x00
CH2_SCAL_OFFSET	CH2 System Calibration Offset Coefficients	0x40 - 0x41	R/W	0x0000
Reserved	-	0x42	-	0x00
CH2_SCAL_GAIN	CH2 System Calibration Gain Coefficient	0x43 - 0x44	R/W	0x8000
Reserved	-	0x45	-	0x00
CH2_SCAL_SCALING	CH2 System Calibration Scaling Coefficients	0x46	R/W	0x01
CH2_SCAL_BITS_ SELECTOR	CH2 System Calibration Bit Selector	0x47	R/W	0x00
CH3_SCAL_OFFSET	CH3 System Calibration Offset Coefficients	0x48 - 0x49	R/W	0x0000
Reserved	-	0x4A	-	0x00
CH3_SCAL_GAIN	CH3 System Calibration Gain Coefficient	0x4B - 0x4C	R/W	0x8000
Reserved	-	0x4D	-	0x00
CH3_SCAL_SCALING	CH3 System Calibration Scaling Coefficients	0x4E	R/W	0x01
CH3_SCAL_BITS_ SELECTOR	CH3 System Calibration Bit Selector	0x4F	R/W	0x00
Reserved	-	0x50 - 0x7F	-	0x00

9.6.1 Power and Reset Registers

Table 8. RESTCN

RESET CONTROL (ADDRESS 0x00)		
BIT	**BIT SYMBOL**	**BIT DESCRIPTION**
[7:0]	REG_AND_CNV_RST	Register and Conversion Reset **0xC3:** Register and conversion reset **Others:** Neglected

Copyright © 2011–2016, Texas Instruments Incorporated

Table 9. SPI_RESET

SPI RESET CONTROL (ADDRESS 0x02)		
BIT	**BIT SYMBOL**	**BIT DESCRIPTION**
[0]	SPI_RST	SPI Reset Enable **0x0 (default):** SPI Reset Disabled **0x1:** SPI Reset Enabled(1)

Table 10. PWRCN

POWER MODE CONTROL AND STATUS (ADDRESS 0x08)		
BIT	**BIT SYMBOL**	**BIT DESCRIPTION**
[7:2]	Reserved	-
[1:0]	PWRCN	Power Control Write Only – power down mode control **0x0:** Active Mode **0x1:** Power-down Mode **0x3:** Stand-by Mode Read Only – the present mode is: **0x0 (default):** Active Mode **0x1:** Power-down Mode **0x3:** Stand-by Mode

(1) Once written, the contents of this register are sticky. That is, the content of this register cannot be changed with subsequent write. However, a Register reset clears the register as well as the sticky status.

9.6.2 ADC Registers

Table 11. ADC_RESTART

ADC RESTART CONVERSION (ADDRESS 0x0B)		
BIT	**BIT SYMBOL**	**BIT DESCRIPTION**
[7:1]	Reserved	-
0	RESTART	Restart conversion **1**: Restart conversion.

Table 12. ADC_AUXCN

ADC AUXILIARY CONTROL (ADDRESS 0x12)		
BIT	**BIT SYMBOL**	**BIT DESCRIPTION**
7	Reserved	-
6	RESET_SYSCAL	The System Calibration registers (CHx_SCAL_OFFSET and CHx_SCAL_GAIN) are: **0 (default):** preserved even when "REG_AND_CNV_RST" = 0xC3. **1:** reset by setting "REG_AND_CNV_RST" = 0xC3.
5	CLK_EXT_DET	External clock detection **0 (default):** "External Clock Detection" is operational **1:** "External-Clock Detection" is bypassed
4	CLK_SEL	Clock select – only valid if CLK_EXT_DET = 1 **0 (default):** Selects internal clock **1:** Selects external clock

Copyright © 2011–2016, Texas Instruments Incorporated

Table 12. ADC_AUXCN (continued)

ADC AUXILIARY CONTROL (ADDRESS 0x12)		
BIT	**BIT SYMBOL**	**BIT DESCRIPTION**
[3:0]	RTD_CUR_SEL (LMP90080 and LMP90078 only)	Selects RTD Current as follows: **0x0 (default):** 0 µA **0x1:** 100 µA **0x2:** 200 µA **0x3:** 300 µA **0x4:** 400 µA **0x5:** 500 µA **0x6:** 600 µA **0x7**: 700 µA **0x8:** 800 µA **0x9:** 900 µA **0xA:** 1000 µA

Table 13. ADC_DONE

ADC DATA AVAILABLE (ADDRESS 0x18)		
BIT	**BIT SYMBOL**	**BIT DESCRIPTION**
[7:0]	DT_AVAIL_B	Data Available – indicates if new conversion data is available **0x00 − 0xFE:** Available **0xFF:** Not available

Table 14. ADC_DOUT (1)

16-BIT CONVERSION DATA (TWO'S COMPLEMENT) (ADDRESS 0x1A - 0x1B)		
ADDRESS	**NAME**	**REGISTER DESCRIPTION**
0x1A	ADC_DOUTH	ADC Conversion Data [15:8]
0x1B	ADC_DOUTL	ADC Conversion Data [7:0]
0x1C	Reserved	Reserved

(1) Repeat reads of these registers are allowed as long as such reads are spaced apart by at least 72 µs.

9.6.3 Channel Configuration Registers

Table 15. CH_STS

CHANNEL STATUS (ADDRESS 0x1E)		
BIT	**BIT SYMBOL**	**BIT DESCRIPTION**
[7:2]	Reserved	-
1	CH_SCAN_NRDY	Channel Scan Not Ready – indicates if it is okay to program CH_SCAN 0: Update not pending, CH_SCAN register is okay to program 1: Update pending, CH_SCAN register is not ready to be programmed
0	INV_OR_RPT_RD_STS	Invalid or Repeated Read Status 0: ADC_DOUT just read was valid and hitherto unread 1: ADC_DOUT just read was either invalid (not ready) or there was a repeated read.

Copyright © 2011–2016, Texas Instruments Incorporated

Table 16. CH_SCAN (1)

CHANNEL SCAN MODE (ADDRESS 0x1F)		
BIT	**BIT SYMBOL**	**BIT DESCRIPTION**
[7:6]	CH_SCAN_SEL	Channel Scan Select **0x0 (default):** ScanMode0: Single-Channel Continuous Conversion **0x1:** ScanMode1: One or more channels Single Scan **0x2:** ScanMode2: One or more channels Continuous Scan **0x3**: ScanMode3: One or more channels Continuous Scan with Burnout Currents
[5:3]	LAST_CH (CH4 to CH6 for LMP90080 and LMP90079 only)	Last channel for conversion **0x0:** CH0 **0x1:** CH1 **0x2:** CH2 **0x3:** CH3 **0x4:** CH4 **0x5:** CH5 **0x6 (default):** CH6 (2)
[2:0]	FIRST_CH (CH4 to CH6 for LMP90080 and LMP90079 only)	Starting channel for conversion **0x0 (default):** CH0 **0x1:** CH1 **0x2:** CH2 **0x3:** CH3 **0x4:** CH4 **0x5:** CH5 **0x6:** CH6 (3)

(1) While writing to the CH_SCAN register, if 0x7 is written to FIRST_CH or LAST_CH the write to the entire CH_SCAN register is ignored.
(2) LAST_CH cannot be smaller than FIRST_CH. For example, if LAST_CH = CH5, then FIRST_CH cannot be CH6. If 0x7 is written it is ignored.
(3) FIRST_CH cannot be greater than LAST_CH. For example, if FIRST_CH = CH1, then LAST_CH cannot be CH0. If 0x7 is written it is ignored.

Table 17. CHx_INPUTCN

CHANNEL INPUT CONTROL (CH4 TO CH6 FOR LMP90080/LMP90079 ONLY) REGISTER ADDRESS (HEX): CH0: 0x20, CH1: 0x22, CH2: 0x24, CH3: 0x26, CH4: 0x28, CH5: 0x2A, CH6: 0x2C		
BIT	**BIT SYMBOL**	**BIT DESCRIPTION**
7	BURNOUT_EN	Enable sensor diagnostic **0 (default):** Disable Sensor Diagnostics current injection for this Channel **1:** Enable Sensor Diagnostics current injection for this Channel
6	VREF_SEL	Select the reference 0 (Default): Select VREFP1 and VREFN1 1: Select VREFP2 and VREFN2
[5:3]	VINP	Positive input select **0x0:** VIN0 **0x1:** VIN1 **0x2:** VIN2 **0x3:** VIN3 (LMP90080/LMP90079 only) **0x4:**VIN4 (LMP90080/LMP90079 only) **0x5:**VIN5 (LMP90080/LMP90079 only) **0x6:** VIN6 **0x7:** VIN7 (1)

(1) To see the default values for each channel, refer to the table below.

Copyright © 2011–2016, Texas Instruments Incorporated

Table 17. CHx_INPUTCN (continued)

CHANNEL INPUT CONTROL (CH4 TO CH6 FOR LMP90080/LMP90079 ONLY) REGISTER ADDRESS (HEX): CH0: 0x20, CH1: 0x22, CH2: 0x24, CH3: 0x26, CH4: 0x28, CH5: 0x2A, CH6: 0x2C		
BIT	**BIT SYMBOL**	**BIT DESCRIPTION**
[2:0]	VINN	Negative input select **0x0:** VIN0 **0x1:** VIN1 **0x2:** VIN2 **0x3:** VIN3 (LMP90080/LMP90079 only) **0x4:**VIN4 (LMP90080/LMP90079 only) **0x5:**VIN5 (LMP90080/LMP90079 only) **0x6:** VIN6 **0x7:** VIN7 (1)

Table 18. Default VIN for CH0-CH6

	VINP	**VINN**
CH0	VIN0	VIN1
CH1	VIN2	VIN3 (LMP90080/LMP90079 only)
CH2	VIN4 (LMP90080/LMP90079 only)	VIN5 (LMP90080/LMP90079 only)
CH3	VIN6	VIN7
CH4 (LMP90080/LMP90079 only)	VIN0	VIN1
CH5 (LMP90080/LMP90079 only)	VIN2	VIN3
CH6 (LMP90080/LMP90079 only)	VIN4	VIN5

Table 19. CHx_CONFIG

CHANNEL CONFIGURATION (CH4 TO CH6 LMP90080/LMP90079 ONLY) REGISTER ADDRESS (HEX): CH0: 0x21, CH1: 0x23, CH2: 0x25, CH3: 0x27, CH4: 0x29, CH5: 0x2B, CH6: 0x2D		
BIT	**BIT SYMBOL**	**BIT DESCRIPTION**
7	Reserved	-
[6:4]	ODR_SEL	ODR Select **0x0:** 13.42 / 8 = 1.6775 SPS **0x1:** 13.42 / 4 = 3.355 SPS **0x2:** 13.42 / 2 = 6.71 SPS **0x3:** 13.42 SPS **0x4:** 214.65 / 8 = 26.83125 SPS **0x5:** 214.65 / 4 = 53.6625 SPS **0x6:** 214.65 / 2 = 107.325 SPS **0x7(default):** 214.65 SPS
[3:1]	GAIN_SEL	Gain Select **0x0 (default):** 1 (FGA OFF) **0x1:** 2 (FGA OFF) **0x2:** 4 (FGA OFF) **0x3:** 8 (FGA OFF) **0x4:** 16 (FGA ON) **0x5:** 32 (FGA ON) **0x6:** 64 (FGA ON) **0x7:** 128 (FGA ON)
0	BUF_EN	Enable/Disable the buffer **0 (default):** Exclude the buffer in the signal path **1:** Include the buffer from the signal path (1)

(1) When gain ≥ 16, the buffer is automatically included in the signal path irrespective of this bit.

Copyright © 2011–2016, Texas Instruments Incorporated

9.6.4 Calibration Registers

Table 20. BGCALCN

BACKGROUND CALIBRATION CONTROL (ADDRESS 0x10)		
BIT	**BIT SYMBOL**	**BIT DESCRIPTION**
[7:2]	Reserved	-
[1:0]	BGCALN	Background calibration control – selects scheme for continuous background calibration. **0x0 (default):** BgcalMode0: Background Calibration OFF **0x1:** BgcalMode1: Offset Correction / Gain Estimation **0x2:** BgcalMode2: Offset Correction / Gain Correction **0x3:** BgcalMode3: Offset Estimation / Gain Estimation

Table 21. SCALCN

SYSTEM CALIBRATION CONTROL (ADDRESS 0x17)		
BIT	**BIT SYMBOL**	**BIT DESCRIPTION**
[7:2]	Reserved	-
[1:0]	SCALCN	System Calibration Control When written, set SCALCN to: **0x0 (default):** Normal Mode **0x1:** “System Calibration Offset Coefficient Determination” mode **0x2:** “System Calibration Gain Coefficient Determination” mode **0x3:** Reserved When read, this bit indicates the system calibration mode is in: **0x0:** Normal Mode **0x1:** "System Calibration Offset Coefficient Determination" mode **0x2:** "System Calibration Gain Coefficient Determination" mode **0x3:** Reserved(1)

(1) When read, this bit will indicate the current System Calibration status. Since this coefficient determination mode will only take 1 conversion cycle, reading this register will only return 0x00, unless this register is read within 1 conversion window.

Table 22. CHx_SCAL_OFFSET

CH0-CH3 SYSTEM CALIBRATION OFFSET REGISTERS (TWO'S-COMPLEMENT)					
ADDR				**NAME**	**DESCRIPTION**
CH0	**CH1**	**CH2**	**CH3**		
0x30	0x38	0x40	0x48	CHx_SCAL_OFFSETH	System Calibration Offset Coefficient Data [15:8]
0x31	0x39	0x41	0x49	CHx_SCAL_OFFSETM	System Calibration Offset Coefficient Data [7:0]
0x32	0x3A	0x42	0x4A	Reserved	-

Table 23. CHx_SCAL_GAIN

CH0-CH3 SYSTEM CALIBRATION GAIN REGISTERS (FIXED POINT 1.23 FORMAT)					
ADDR				**NAME**	**DESCRIPTION**
CH0	**CH1**	**CH2**	**CH3**		
0x33	0x3B	0x43	0x4B	CHx_SCAL_GAINH	System Calibration Gain Coefficient Data [15:8]
0x34	0x3C	0x44	0x4C	CHx_SCAL_GAINL	System Calibration Gain Coefficient Data [7:0]
0x35	0x3D	0x45	0x4D	Reserved	-

Copyright © 2011–2016, Texas Instruments Incorporated

Table 24. CHx_SCAL_SCALING

CH0-CH3 SYSTEM CALIBRATION SCALING COEFFICIENT REGISTERS					
ADDR				NAME	DESCRIPTION
CH0	CH1	CH2	CH3		
0x36	0x3E	0x46	0x4E	CHx_SCAL_SCALING	System Calibration Scaling Coefficient Data [5:0]

Table 25. CHx_SCAL_BITS_SELECTOR

CH0-CH3 SYSTEM CALIBRATION BIT SELECTOR REGISTERS					
ADDR				NAME	DESCRIPTION
CH0	CH1	CH2	CH3		
0x37	0x3F	0x47	0x4F	CHx_SCAL_BITS_SELECTOR	System Calibration Bit Selection Data [2:0]

9.6.5 Sensor Diagnostic Registers

Table 26. SENDIAG_THLD

SENSOR DIAGNOSTIC THRESHOLD (ADDRESS 0x14)		
ADDRESS	NAME	REGISTER DESCRIPTION
0x14	SENDIAG_THLD	Sensor Diagnostic threshold

Table 27. SENDIAG_FLAGS

SENSOR DIAGNOSTIC FLAGS (ADDRESS 0x19)		
BIT	BIT SYMBOL	BIT DESCRIPTION
7	SHORT_THLD_ FLAG	Short Circuit Threshold Flag = 1 when the absolute value of VOUT is within the absolute threshold voltage set by the SENDIAG_THLD register.
6	RAILS_FLAG	Rails Flag = 1 when at least one of the inputs is near rail (VA or GND).
5	POR_AFT_LST_RD	Power-on-reset after last read = 1 when there was a power-on-reset event since the last time the SENDIAG_FLAGS register was read.
[4:3]	OFLO_FLAGS	Overflow flags **0x0:** Normal operation **0x1:** The modulator was not over-ranged, but ADC_DOUT got clamped to 0x7f_ffff (positive fullscale) or 0x80_0000 (negative full scale) **0x2:** The modulator was over-ranged (VIN > 1.2*VREF/GAIN) **0x3:** The modulator was over-ranged (VIN < -1.2*VREF/GAIN)
[2:0]	SAMPLED_CH	Channel Number – the sampled channel for ADC_DOUT and SENDIAG_FLAGS.

9.6.6 SPI Registers

Table 28. SPI_HANDSHAKECN

SPI HANDSHAKE CONTROL (ADDRESS 0x01)					
BIT	BIT SYMBOL	BIT DESCRIPTION			
[7:4]	Reserved	-			
[3:1]	SDO_DRDYB_ DRIVER	SDO/DRDYB Driver – sets who is driving the SDO/DRDYB pin			
			Whenever CSB is Asserted and the Device is Reading ADC_DOUT	**Whenever CSB is Asserted and the Device is Not Reading ADC_DOUT**	**CSB is Deasserted**
		0x0 (default)	SDO is driving	DRDYB is driving	High-Z
		0x3	SDO is driving	DRDYB is driving	DRDYB is driving
		0x4	SDO is driving	High-Z	High-Z
		Others	Forbidden		

Copyright © 2011–2016, Texas Instruments Incorporated

Table 28. SPI_HANDSHAKECN (continued)

SPI HANDSHAKE CONTROL (ADDRESS 0x01)		
BIT	**BIT SYMBOL**	**BIT DESCRIPTION**
0	SW_OFF_TRG	Switch-off trigger - refers to the switching of the output drive from the slave to the master. **0 (default):** SDO will be high-Z after the last (16th, 24th, 32nd, etc) rising edge of SCLK. This option allows time for the slave to transfer control back to the master at the end of the frame. **1:** SDO's high-Z is postponed to the subsequent falling edge following the last (16th, 24th, 32nd, etc) rising edge of SCLK. This option provides additional hold time for the last bit, DB0, in non-streaming read transfers.

Table 29. SPI_STREAMCN

SPI STREAMING CONTROL (ADDRESS 0x03)		
BIT	**BIT SYMBOL**	**BIT DESCRIPTION**
7	STRM_TYPE	Stream type **0 (default):** Normal Streaming mode **1:** Controlled Streaming mode
[6:0]	STRM_ RANGE	Stream Range – selects Range for Controlled Streaming mode **Default:** 0x00

Table 30. DATA_ONLY_1

DATA ONLY READ CONTROL 1 (ADDRESS 0x09)		
BIT	**BIT SYMBOL**	**BIT DESCRIPTION**
7	Reserved	-
[6:0]	DATA_ONLY_ADR	Start address for the Data Only Read Transaction **Default:** 0x1A Please refer to the description of DT_ONLY_SZ in Table 31 register.

Table 31. DATA_ONLY_2

DATA ONLY READ CONTROL 2 (ADDRESS 0x0A)		
BIT	**BIT SYMBOL**	**BIT DESCRIPTION**
[7:3]	Reserved	-
[2:0]	DATA_ONLY_SZ	Number of bytes to be read out in Data Only mode. A value of 0x0 means read one byte and 0x7 means read 8 bytes. **Default:** 0x2

Table 32. SPI_DRDYBCN

SPI DATA READY BAR CONTROL (ADDRESS 0x11)		
BIT	**BIT SYMBOL**	**BIT DESCRIPTION**
7	SPI_DRDYB_D6	Enable DRDYB on D6 **0 (default):** D6 is a GPIO **1:** D6 = DRDYB signal
6	Reserved	-
5	CRC_RST	CRC Reset **0 (default):** Enable CRC reset on DRDYB deassertion **1:** Disable CRC reset on DRDYB deassertion
4	Reserved	-
3	FGA_BGCAL	Gain background calibration **0 (default):** Correct FGA gain error. This is useful only if the device is operating in BgcalMode2 and ScanMode2 or ScanMode3. **1:** Correct FGA gain error using the last known coefficients.
[2:0]	Reserved	Default - 0x3 (do not change this value)

Copyright © 2011–2016, Texas Instruments Incorporated

Table 33. SPI_CRC_CN

CRC CONTROL (ADDRESS 0x13)		
BIT	**BIT SYMBOL**	**BIT DESCRIPTION**
[7:5]	Reserved	-
4	EN_CRC	Enable CRC **0 (default):** Disable CRC **1:** Enable CRC
3	Reserved	Default - 0x0 (do not change this value)
2	DRDYB_AFT_CRC	DRDYB After CRC **0 (default):** DRDYB is deasserted (active high) after ADC_DOUTL is read. **1:** DRDYB is deasserted after SPI_CRC_DAT (which follows ADC_DOUTL), is read.
[1:0]	Reserved	-

Table 34. SPI_CRC_DAT

CRC DATA (ADDRESS 0x1D)		
BIT	**BIT SYMBOL**	**BIT DESCRIPTION**
[7:0]	CRC_DAT	CRC Data When written, this register reset CRC: **Any Value:** Reset CRC When read, this register indicates the CRC data.

9.6.7 GPIO Registers

Table 35. GPIO_DIRCN

GPIO DIRECTION (ADDRESS 0x0E)		
BIT	**BIT SYMBOL**	**BIT DESCRIPTION**
7	Reserved	-
x	GPIO_DIRCNx	GPIO direction control – these bits are used to control the direction of each General Purpose Input/Outputs (GPIO) pins D0 - D6. **0 (default):** Dx is an Input **1:** Dx is an Output where 0 ≤ x ≤ 6 For example, writing a 1 to bit 6 means D6 is an Output.(1)

(1) If D6 is used for DRDYB, then it cannot be used for GPIO.

Table 36. GPIO_DAT

GPIO DATA (ADDRESS 0x0F)		
BIT	**BIT SYMBOL**	**BIT DESCRIPTION**
7	Reserved	-
x	Dx	Write Only - when GPIO_DIRCNx = 0 0: Dx is LO 1: Dx is HI Read Only - when GPIO_DIRCNx = 1 0: Dx driven LO 1: Dx driven HI where 0 ≤ x ≤ 6 For example, writing a 0 to bit 4 means D4 is LO. It is okay to Read the GPIOs that are configured as outputs and write to GPIOs that are configured as inputs. Reading the GPIOs that are outputs would return the current value on those GPIOs, and writing to the GPIOs that are inputs are neglected.

Copyright © 2011–2016, Texas Instruments Incorporated

10 Application and Implementation

NOTE

Information in the following applications sections is not part of the TI component specification, and TI does not warrant its accuracy or completeness. TI's customers are responsible for determining suitability of components for their purposes. Customers should validate and test their design implementation to confirm system functionality.

10.1 Application Information

10.1.1 Connecting the Supplies

10.1.1.1 V_A and V_{IO}

Any ADC architecture is sensitive to spikes on the analog voltage, V_A, digital input/output voltage, V_{IO}, and ground pins. These spikes may originate from switching power supplies, digital logic, high power devices, and other sources. To diminish these spikes, the LMP900xx's V_A and V_{IO} pins should be clean and well bypassed. A 0.1 µF ceramic bypass capacitor and a 1 µF tantalum capacitor should be used to bypass the LMP900xx supplies, with the 0.1 µF capacitor placed as close to the LMP900xx as possible.

Since the LMP900xx has both external V_A and V_{IO} pins, the user has two options on how to connect these pins. The first option is to tie V_A and V_{IO} together and power them with the same power supply. This is the most cost effective way of powering the LMP900xx but is also the least ideal because noise from V_{IO} can couple into V_A and negatively affect performance. The second option involves powering V_A and V_{IO} with separate power supplies. These supply voltages can have the same amplitude or they can be different.

10.1.1.2 V_{REF}

Operation with V_{REF} below V_A is also possible with slightly diminished performance. As V_{REF} is reduced, the range of acceptable analog input voltages is also reduced. Reducing the value of V_{REF} also reduces the size of the LSB. When the LSB size goes below the noise floor of the LMP900xx, the noise will span an increasing number of codes and performance will degrade. For optimal performance, V_{REF} should be the same as V_A and sourced with a clean source that is bypassed with a ceramic capacitor value of 0.1 µF and a tantalum capacitor of 10 µF.

LMP900xx also allows ratiometric connection for noise immunity reasons. A ratiometric connection is when the ADC's V_{REFP} and V_{REFN} are used to excite the input device's (i.e. a bridge sensor) voltage references. This type of connection severely attenuates any V_{REF} ripple seen the ADC output, and is thus strongly recommended.

10.1.2 Quick Start

This section shows step-by-step instructions to configure the LMP900xx to perform a simple DC reading from CH0.

1. Apply $V_A = V_{IO} = V_{REFP1} = 5V$, and ground V_{REFN1}
2. Apply $V_{INP} = ¾V_{REF}$ and $V_{INN} = ¼V_{REF}$ for CH0. Thus, set CH0 = $V_{IN} = V_{INP} - V_{INN} = ½V_{REF}$ (CH0_INPUTCN register)
3. Set gain = 1 (CH0_CONFIG: GAIN_SEL = 0x0)
4. Exclude the buffer from the signal path (CH0_CONFIG: BUF_EN = 0)
5. Set the background to BgcalMode2 (BGCALCN = 0x2)
6. Select V_{REF1} (CH0_INPUTCN: V_{REF_SEL} = 0)
7. To use the internal CLK, set CLK_EXT_DET = 1 and CLK_SEL = 0.
8. Follow the register read/write protocol (Figure 55) to capture ADC_DOUT from CH0.

Copyright © 2011–2016, Texas Instruments Incorporated

Application Information (continued)

10.1.3 ADC_DOUT Calculation

The output code of the LMP900xx can be calculated as:

$$\text{ADC_DOUT} = \pm\left(\frac{(\text{VINP - VINN}) \times \text{GAIN}}{\text{VREFP - VREFN}}\right) \times \left(2^{15}\right)$$

Output Code (13)

ADC_DOUT is in 16−bit two's complement binary format. The largest positive value is 0x7FFF (or 32767 in decimal), while the largest negative value is 0x8000 (or 32768 in decimal). In case of an over range the value is automatically clamped to one of these two values.

Figure 71 shows the theoretical output code, ADC_DOUT, vs. analog input voltage, V_{IN}, using the equation above.

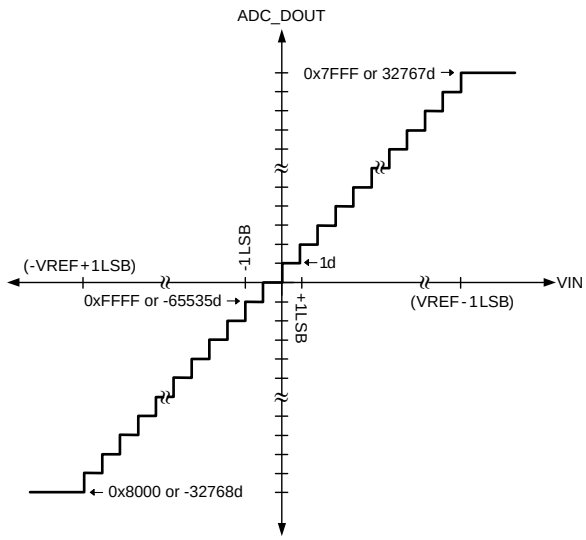

Figure 71. ADC_DOUT vs. VIN of a 16-Bit Resolution (VREF = 5.5 V, Gain = 1).

10.2 Typical Applications

10.2.1 Typical Sensor Application

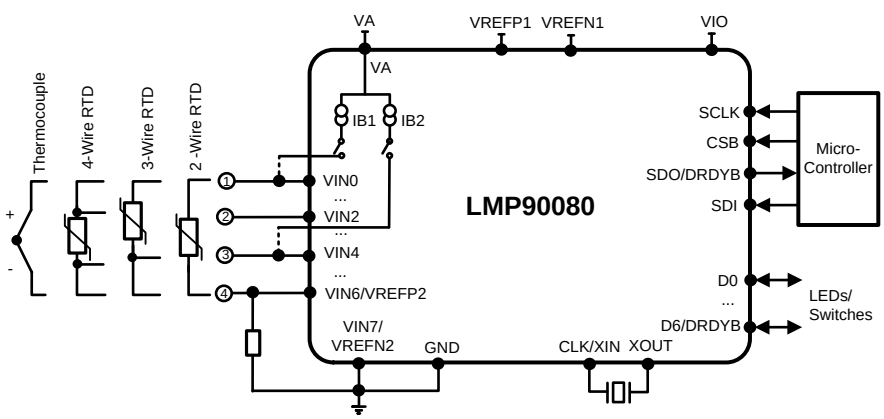

LM90xxx 16-bit Sensor AFE Family of Products		
Product	**Channel Configuration**	**Current Sources**
LMP90080	4 Differential/7 Single-Ended	Yes
LMP90079	4 Differential/7 Single-Ended	No
LMP90078	2 Differential/4 Single-Ended	Yes
LMP90077	2 Differential/4 Single-Ended	No

Figure 72. Typical Sensor Application

Copyright © 2011–2016, Texas Instruments Incorporated

Typical Applications (continued)

10.2.1.1 Design Requirements

- VA = 3 V
- VIO = 3 V
- 3-Wire RTD using 2 current sources

10.2.1.2 Detailed Design Procedure

Figure 72 shows the first topology for a 3-wire resistive temperature detector (RTD) application. Topology #1 uses two excitation current sources, IB1 and IB2, to create a differential voltage across VIN0 and VIN1. As a result of using both IB1 and IB2, only one channel (VIN0-VIN1) needs to be measured. As shown in Equation 14, the equation for this channel is IB1 x (RTD – RCOMP) assuming that RLINE1 = RLINE2.

VIN0 = IB1 (RLINE1 + RTD) + (IB1 + IB2) (RLINE3 + RREF)
VIN1 = IB2 (RLINE2 + RCOMP) + (IB1 + IB2) (RLINE3 + RREF)
If RLINE1 = RLINE2, then:
VIN = (VIN0 - VIN1) = IB1 (RTD - RCOMP)

VIN Equation for Topology #1 (14)

The PT-100 changes linearly from 100 Ω at 0°C to 146.07 Ω at 120°C. If desired, choose a suitable compensating resistor (RCOMP) so that VIN can be virtually 0 V at any desirable temperature. For example, if RCOMP = 100 Ω, then at 0°C, VIN = 0 V and thus a higher gain can be used.

The advantage of this circuit is its ratiometric configuration, where VREF = (IB1 + IB2) x (RREF). Equation 15 shows that a ratiometric configuration eliminates IB1 and IB2 from the output equation, thus increasing the overall performance.

$$ADC_DOUT = \frac{VIN(Gain)}{2VREF}(2^n)$$

$$ADC_DOUT = \frac{[IB1(RTD - RCOMP)Gain]}{2(IB1+IB2)RREF}(2^n)$$

$$ADC_DOUT = \frac{[(RTD - RCOMP)Gain]}{2(2)RREF}(2^n)$$

ADC_DOUT Showing IB1 & IB2 Elimination (15)

10.2.1.3 Application Curve

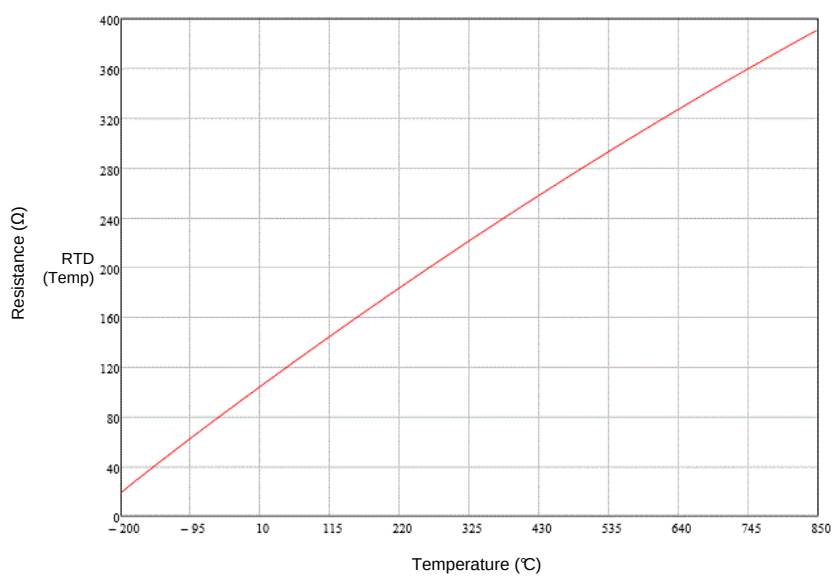

Figure 73. PT-100 RTD Resistance from –200°C to 850°C

Typical Applications (continued)

10.2.2 3–Wire RTD

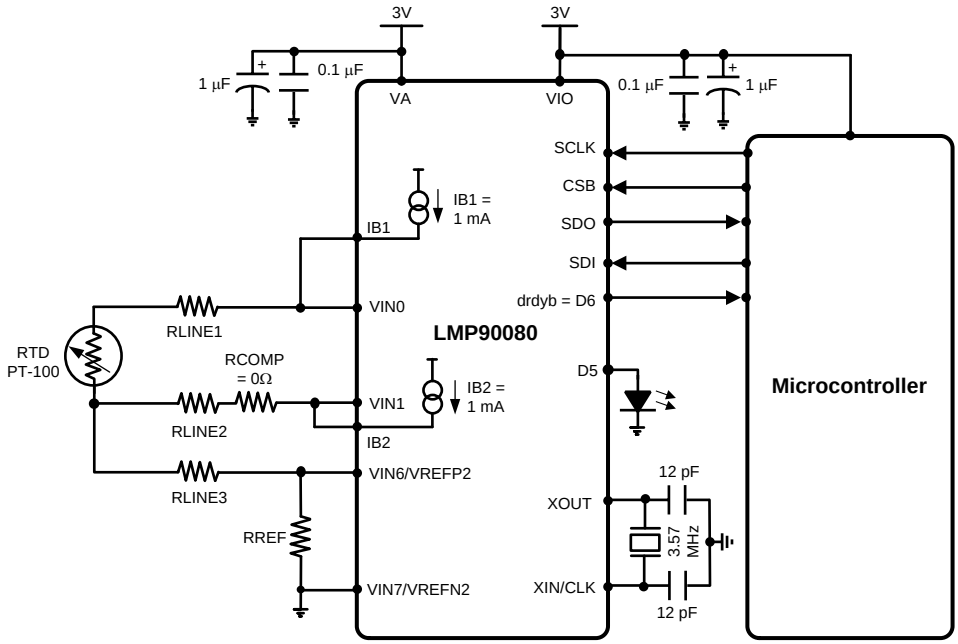

Figure 74. Topology #1: 3-Wire RTD using 2 Current Sources

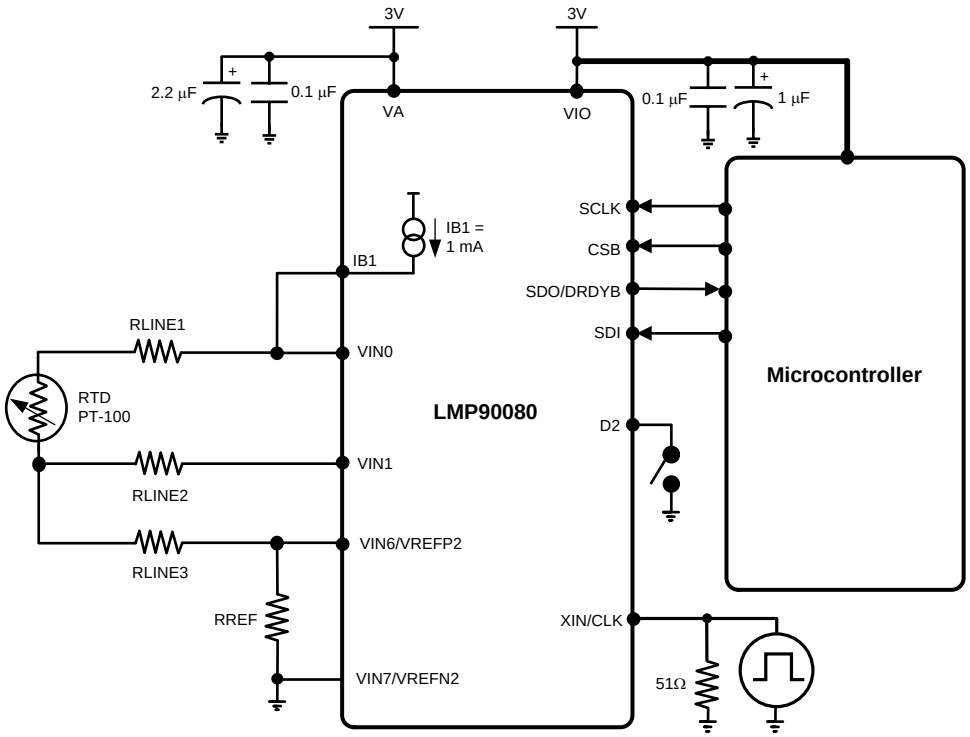

Figure 75. Topology #2: 3-Wire RTD using 1 Current Source

Copyright © 2011–2016, Texas Instruments Incorporated

Typical Applications (continued)

10.2.2.1 Design Requirements

- VA = 3V
- VIO = 3V
- 3-Wire RTD using 1 current source

10.2.2.2 Detailed Design Procedure

Figure 75 shows the second topology for a 3-Wire RTD application. Topology #2 shows the same connection as topology #1, but without IB2. Although this topology eliminates a current source, it requires two channel measurements as shown in Equation 16.

VIN0 = IB1 (RLINE1 + RTD + RLINE3 + RREF)
VIN1 = IB1 (RLINE3 + RREF)
VIN6 = IB1 (RREF)

CH0 = VIN0 - VIN1 = IB1 (RLINE1 + RTD)
CH1 = VIN1 - VIN6 = IB1 (RLINE3)

Assume RLINE1 = RLINE3, thus:
CH0 - CH1 = IB1 (RTD)

VIN Equation for Topology #2 (16)

10.2.2.3 Application Curve

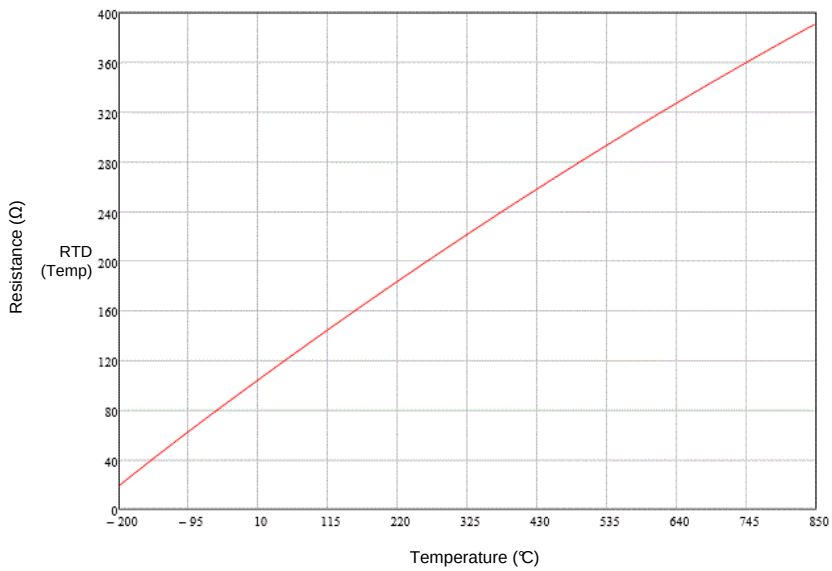

Figure 76. PT-100 RTD Resistance from –200°C to 850°C

Typical Applications (continued)

10.2.3 Thermocouple and IC Analog Temperature

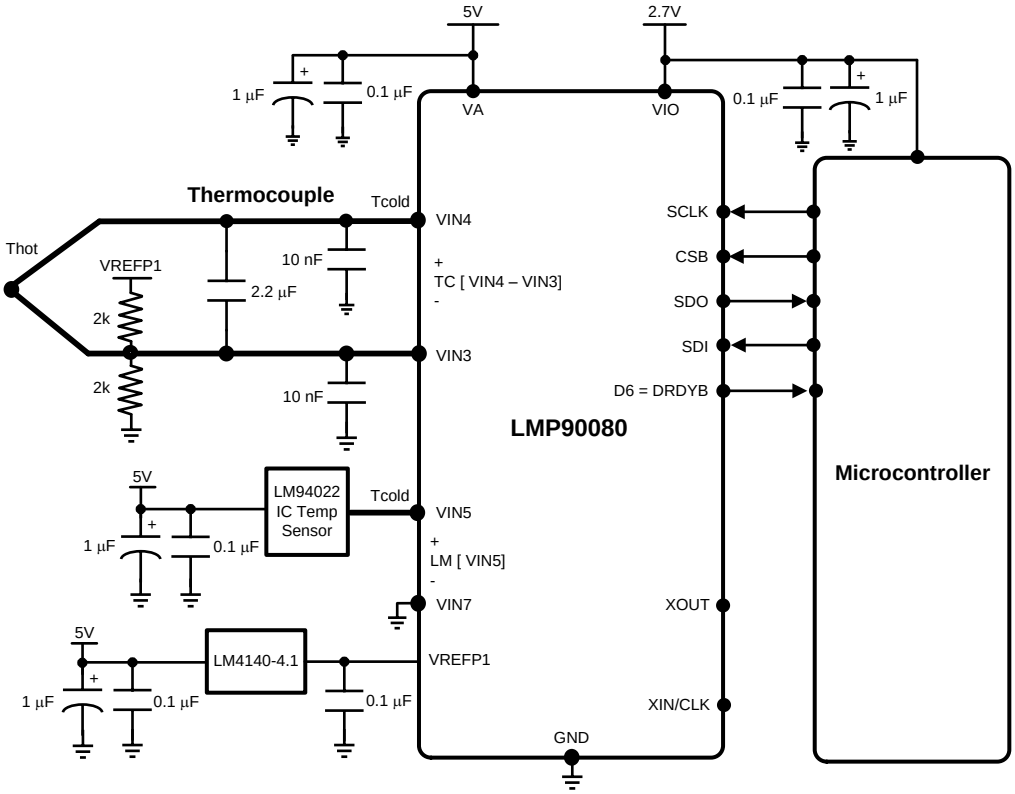

Figure 77. Thermocouple with CJC

10.2.3.1 Design Requirements

- VA = 5V
- VIO = 2.7V
- Thermocouple with Cold Junction Compensation

10.2.3.2 Detailed Design Procedure

The LMP900xx is also ideal for thermocouple temperature applications. Thermocouples have several advantages that make them popular in many industrial and medical applications. Compare to RTDs, thermistors, and IC sensors, thermocouples are the most rugged, least expensive, and can operate over the largest temperature range.

A thermocouple is a sensor whose junction generates a differential voltage, VIN, that is relative to the temperature difference (T_{hot} – T_{cold}). T_{hot} is also known as the measuring junction or “hot” junction, which is placed at the measured environment. T_{cold} is also known as the reference or “cold” junction, which is placed at the measuring system environment.

Because a thermocouple can only measure a temperature difference, it does not have the ability to measure absolute temperature. To determine the absolute temperature of the measured environment (T_{hot}), a technique known as cold junction compensation (CJC) must be used.

In a CJC technique, the “cold” junction temperature, T_{cold}, is sensed by using an IC temperature sensor, such as the LM94022. The temperature sensor should be placed within close proximity of the reference junction and should have an isothermal connection to the board to minimize any potential temperature gradients.

Copyright © 2011–2016, Texas Instruments Incorporated

Typical Applications (continued)

Once T_{cold} is obtained, use a standard thermocouple look-up-table to find its equivalent voltage. Next, measure the differential thermocouple voltage and add the equivalent cold junction voltage. Lastly, convert the resulting voltage to temperature using a standard thermocouple look-up-table.

For example, assume T_{cold} = 20°C. The equivalent voltage from a type K thermocouple look-up-table is 0.798 mV. Next, add the measured differential thermocouple voltage to the T_{cold} equivalent voltage. For example, if the thermocouple voltage is 4.096 mV, the total would be 0.798 mV + 4.096 mV = 4.894 mV. Referring to the type K thermocouple table gives a temperature of 119.37°C for 4.894 mV.

10.2.3.3 Application Curve

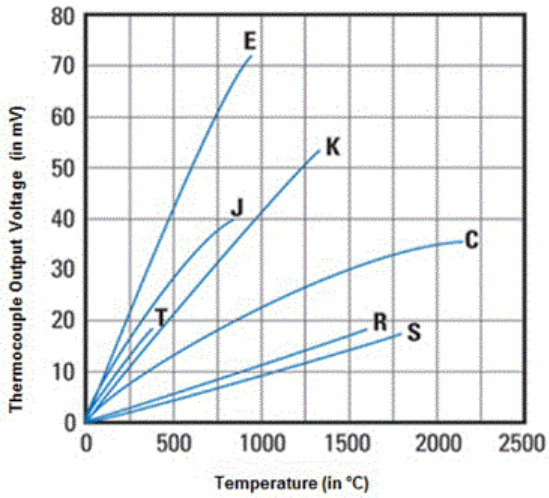

Figure 78. Thermocouple Output as Function of Temperature

11 Power Supply Recommendations

The device can be placed in Active, Power-Down, or Stand-By state.

In Power-Down, the ADC is not converting data, contents of the registers are unaffected, and there is a drastic power reduction. In Stand-By, the ADC is not converting data, but the power is only slightly reduced so that the device can quickly transition into the active state if desired.

These states can be selected using the PWRCN register. When written, PWRCN brings the device into the Active, Power-Down, or Stand-By state. When read, PWRCN indicates the state of the device.

The read value would confirm the write value after a small latency (approximately 15 µs with the internal CLK). It may be appropriate to wait for this latency to confirm the state change. Requests not adhering to this latency requirement may be rejected.

It is not possible to make a direct transition from the power-down state to the stand-by state. This state diagram is shown below.

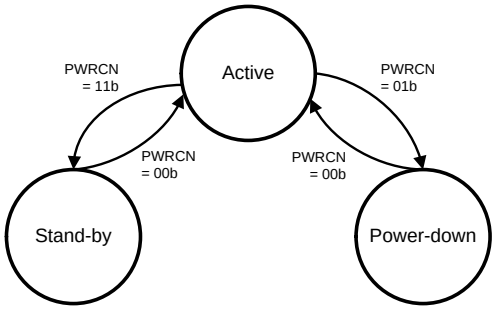

Figure 79. Active, Power-Down, Stand-By State Diagram

12 Layout

12.1 Layout Guidelines

- Follow the guidelines in the *Power Supply Recommendations* section.
- Keep analog traces away from digital traces.
- Never run an analog and digital trace parallel to each other.
- If a digital and analog trace need to cross each other cross them at a 90° angle.
- Use a solid ground plane under the device.

12.2 Layout Example

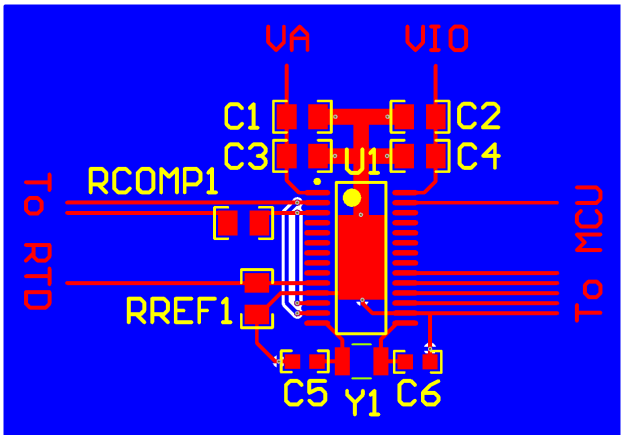

Figure 80. LMP90xx Sample Layout

版权 © 2011–2016, Texas Instruments Incorporated

13 器件和文档支持

13.1 器件支持

13.1.1 器件命名规则

共模抑制比 测量两个输入引脚对于同相共模信号的抑制能力。要计算 CMRR，需测得共模输入电压变化时的输出偏移变化。

CMRR = 20 LOG (Δ共模输入 / Δ输出偏移)

有效位数量（ENOB 或有效位） – 表示转换器等效于理想 ADC 时的有效位数量 (ENOB)。LMP90080 的 ENOB 是一项直流 ENOB 规范，而非使用快速傅立叶变换 (FFT) 和信纳比 (SINAD) 测得的动态 ENOB。其计算格式如下：

$$\text{ENOB} = \log_2\left(\frac{2 \times \text{VREF/Gain}}{\text{RMS Noise}}\right) \tag{17}$$

增益误差是与传递函数理想斜率间的偏差。

积分非线性 (INL) 测量通过输入到输出传递函数的直线上每一个代码的偏差。这条直线上的任何给定代码的偏差都是从代码值的中心测量的。使用的是端点拟合方法。根据电气特性表，该产品的 INL 规定在一个有限范围内。

负满量程误差是输出代码转换到负满量程时的差动输入电压与 (-VREF + 1 LSB) 之差。

负增益误差 是负满量程误差与偏移误差除以 (VREF / 增益) 之差。

无噪声分辨率 是指定转换器噪声位数的一种方法。

$$\text{NFR} = \log_2\left(\frac{2 \times \text{VREF/Gain}}{\text{Peak-to-Peak Noise}}\right) \tag{18}$$

ODR 输出数据速率。

偏移误差 是输出代码由 0000h 转换至 0001h 的差分输入电压与 1 LSB 之差。

正满量程误差是输出代码转换至正满量程时的差动输入电压与 (VREF – 1 LSB) 之差。

正增益误差 是正满量程误差与偏移误差除以 (VREF / 增益) 之差。

电源抑制比 (PSRR) 测量对模拟电源电压变化的抑制能力。PSRR 计算的是给定电源电压变化量的偏移误差变化比，单位为 dB。

PSRR = 20 LOG (ΔVA / Δ输出偏移)

13.2 相关链接

以下表格列出了快速访问链接。范围包括技术文档、支持与社区资源、工具和软件，并且可以快速访问样片或购买链接。

表 **37.** 相关链接

器件	产品文件夹	样片与购买	技术文章	工具与软件	支持与社区
LMP90077	请单击此处	请单击此处	请单击此处	请单击此处	请单击此处
LMP90078	请单击此处	请单击此处	请单击此处	请单击此处	请单击此处
LMP90079	请单击此处	请单击此处	请单击此处	请单击此处	请单击此处
LMP90080	请单击此处	请单击此处	请单击此处	请单击此处	请单击此处

13.3 社区资源

The following links connect to TI community resources. Linked contents are provided "AS IS" by the respective contributors. They do not constitute TI specifications and do not necessarily reflect TI's views; see TI's Terms of Use.

TI E2E™ Online Community ***TI's Engineer-to-Engineer (E2E) Community.*** Created to foster collaboration among engineers. At e2e.ti.com, you can ask questions, share knowledge, explore ideas and help solve problems with fellow engineers.

社区资源 (接下页)

Design Support ***TI's Design Support*** Quickly find helpful E2E forums along with design support tools and contact information for technical support.

13.4 商标

E2E is a trademark of Texas Instruments.
WEBENCH is a registered trademark of Texas Instruments.
All other trademarks are the property of their respective owners.

13.5 静电放电警告

这些装置包含有限的内置 ESD 保护。 存储或装卸时，应将导线一起截短或将装置放置于导电泡棉中，以防止 MOS 门极遭受静电损伤。

13.6 Glossary

SLYZ022 — *TI Glossary*.

This glossary lists and explains terms, acronyms, and definitions.

14 机械、封装和可订购信息

以下页中包括机械、封装和可订购信息。这些信息是针对指定器件可提供的最新数据。这些数据会在无通知且不对本文档进行修订的情况下发生改变。欲获得该数据表的浏览器版本，请查阅左侧的导航栏。

版权 © 2011–2016, Texas Instruments Incorporated

PACKAGING INFORMATION

Orderable part number	Status (1)	Material type (2)	Package | Pins	Package qty | Carrier	RoHS (3)	Lead finish/ Ball material (4)	MSL rating/ Peak reflow (5)	Op temp (°C)	Part marking (6)
LMP90077MH/NOPB	Active	Production	HTSSOP (PWP) | 28	48 | TUBE	Yes	SN	Level-3-260C-168 HR	-40 to 125	LMP90077 MH
LMP90077MH/NOPB.A	Active	Production	HTSSOP (PWP) | 28	48 | TUBE	Yes	SN	Level-3-260C-168 HR	-40 to 125	LMP90077 MH
LMP90077MHE/NOPB	Active	Production	HTSSOP (PWP) | 28	250 | SMALL T&R	Yes	SN	Level-3-260C-168 HR	-40 to 125	LMP90077 MH
LMP90077MHE/NOPB.A	Active	Production	HTSSOP (PWP) | 28	250 | SMALL T&R	Yes	SN	Level-3-260C-168 HR	-40 to 125	LMP90077 MH
LMP90077MHX/NOPB	Active	Production	HTSSOP (PWP) | 28	2500 | LARGE T&R	Yes	SN	Level-3-260C-168 HR	-40 to 125	LMP90077 MH
LMP90077MHX/NOPB.A	Active	Production	HTSSOP (PWP) | 28	2500 | LARGE T&R	Yes	SN	Level-3-260C-168 HR	-40 to 125	LMP90077 MH
LMP90078MH/NOPB	Active	Production	HTSSOP (PWP) | 28	48 | TUBE	Yes	SN	Level-3-260C-168 HR	-40 to 125	LMP90078 MH
LMP90078MH/NOPB.A	Active	Production	HTSSOP (PWP) | 28	48 | TUBE	Yes	SN	Level-3-260C-168 HR	-40 to 125	LMP90078 MH
LMP90078MHE/NOPB	Active	Production	HTSSOP (PWP) | 28	250 | SMALL T&R	Yes	SN	Level-3-260C-168 HR	-40 to 125	LMP90078 MH
LMP90078MHE/NOPB.A	Active	Production	HTSSOP (PWP) | 28	250 | SMALL T&R	Yes	SN	Level-3-260C-168 HR	-40 to 125	LMP90078 MH
LMP90078MHX/NOPB	Active	Production	HTSSOP (PWP) | 28	2500 | LARGE T&R	Yes	SN	Level-3-260C-168 HR	-40 to 125	LMP90078 MH
LMP90078MHX/NOPB.A	Active	Production	HTSSOP (PWP) | 28	2500 | LARGE T&R	Yes	SN	Level-3-260C-168 HR	-40 to 125	LMP90078 MH
LMP90078MHX/NOPB.B	Active	Production	HTSSOP (PWP) | 28	2500 | LARGE T&R	-	SN	Level-3-260C-168 HR	-40 to 125	LMP90078 MH
LMP90079MH/NOPB	Active	Production	HTSSOP (PWP) | 28	48 | TUBE	Yes	SN	Level-3-260C-168 HR	-40 to 125	LMP90079 MH
LMP90079MH/NOPB.A	Active	Production	HTSSOP (PWP) | 28	48 | TUBE	Yes	SN	Level-3-260C-168 HR	-40 to 125	LMP90079 MH
LMP90079MHE/NOPB	Active	Production	HTSSOP (PWP) | 28	250 | SMALL T&R	Yes	SN	Level-3-260C-168 HR	-40 to 125	LMP90079 MH

Orderable part number	Status (1)	Material type (2)	Package | Pins	Package qty | Carrier	RoHS (3)	Lead finish/ Ball material (4)	MSL rating/ Peak reflow (5)	Op temp (°C)	Part marking (6)
LMP90079MHE/NOPB.A	Active	Production	HTSSOP (PWP) | 28	250 | SMALL T&R	Yes	SN	Level-3-260C-168 HR	-40 to 125	LMP90079 MH
LMP90079MHE/NOPB.B	Active	Production	HTSSOP (PWP) | 28	250 | SMALL T&R	-	SN	Level-3-260C-168 HR	-40 to 125	LMP90079 MH
LMP90079MHX/NOPB	Active	Production	HTSSOP (PWP) | 28	2500 | LARGE T&R	Yes	SN	Level-3-260C-168 HR	-40 to 125	LMP90079 MH
LMP90079MHX/NOPB.A	Active	Production	HTSSOP (PWP) | 28	2500 | LARGE T&R	Yes	SN	Level-3-260C-168 HR	-40 to 125	LMP90079 MH
LMP90079MHX/NOPB.B	Active	Production	HTSSOP (PWP) | 28	2500 | LARGE T&R	-	SN	Level-3-260C-168 HR	-40 to 125	LMP90079 MH
LMP90080MH/NOPB	Active	Production	HTSSOP (PWP) | 28	48 | TUBE	Yes	SN	Level-3-260C-168 HR	-40 to 125	LMP90080 MH
LMP90080MH/NOPB.A	Active	Production	HTSSOP (PWP) | 28	48 | TUBE	Yes	SN	Level-3-260C-168 HR	-40 to 125	LMP90080 MH
LMP90080MHE/NOPB	Active	Production	HTSSOP (PWP) | 28	250 | SMALL T&R	Yes	SN	Level-3-260C-168 HR	-40 to 125	LMP90080 MH
LMP90080MHE/NOPB.A	Active	Production	HTSSOP (PWP) | 28	250 | SMALL T&R	Yes	SN	Level-3-260C-168 HR	-40 to 125	LMP90080 MH
LMP90080MHE/NOPB.B	Active	Production	HTSSOP (PWP) | 28	250 | SMALL T&R	-	SN	Level-3-260C-168 HR	-40 to 125	LMP90080 MH
LMP90080MHX/NOPB	Active	Production	HTSSOP (PWP) | 28	2500 | LARGE T&R	Yes	SN	Level-3-260C-168 HR	-40 to 125	LMP90080 MH
LMP90080MHX/NOPB.A	Active	Production	HTSSOP (PWP) | 28	2500 | LARGE T&R	Yes	SN	Level-3-260C-168 HR	-40 to 125	LMP90080 MH
LMP90080MHX/NOPB.B	Active	Production	HTSSOP (PWP) | 28	2500 | LARGE T&R	-	SN	Level-3-260C-168 HR	-40 to 125	LMP90080 MH

(1) **Status:** For more details on status, see our product life cycle.

(2) **Material type:** When designated, preproduction parts are prototypes/experimental devices, and are not yet approved or released for full production. Testing and final process, including without limitation quality assurance, reliability performance testing, and/or process qualification, may not yet be complete, and this item is subject to further changes or possible discontinuation. If available for ordering, purchases will be subject to an additional waiver at checkout, and are intended for early internal evaluation purposes only. These items are sold without warranties of any kind.

(3) **RoHS values:** Yes, No, RoHS Exempt. See the TI RoHS Statement for additional information and value definition.

(4) **Lead finish/Ball material:** Parts may have multiple material finish options. Finish options are separated by a vertical ruled line. Lead finish/Ball material values may wrap to two lines if the finish value exceeds the maximum column width.

(5) **MSL rating/Peak reflow:** The moisture sensitivity level ratings and peak solder (reflow) temperatures. In the event that a part has multiple moisture sensitivity ratings, only the lowest level per JEDEC standards is shown. Refer to the shipping label for the actual reflow temperature that will be used to mount the part to the printed circuit board.

(6) **Part marking:** There may be an additional marking, which relates to the logo, the lot trace code information, or the environmental category of the part.

Multiple part markings will be inside parentheses. Only one part marking contained in parentheses and separated by a "~" will appear on a part. If a line is indented then it is a continuation of the previous line and the two combined represent the entire part marking for that device.

Important Information and Disclaimer: The information provided on this page represents TI's knowledge and belief as of the date that it is provided. TI bases its knowledge and belief on information provided by third parties, and makes no representation or warranty as to the accuracy of such information. Efforts are underway to better integrate information from third parties. TI has taken and continues to take reasonable steps to provide representative and accurate information but may not have conducted destructive testing or chemical analysis on incoming materials and chemicals. TI and TI suppliers consider certain information to be proprietary, and thus CAS numbers and other limited information may not be available for release.

In no event shall TI's liability arising out of such information exceed the total purchase price of the TI part(s) at issue in this document sold by TI to Customer on an annual basis.

OTHER QUALIFIED VERSIONS OF LMP90080 :

- Automotive : LMP90080-Q1

NOTE: Qualified Version Definitions:

- Automotive - Q100 devices qualified for high-reliability automotive applications targeting zero defects

TAPE AND REEL INFORMATION

REEL DIMENSIONS

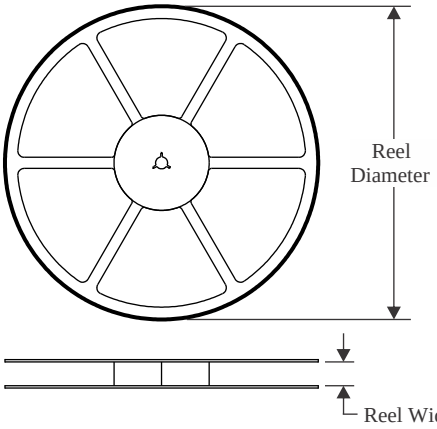

TAPE DIMENSIONS

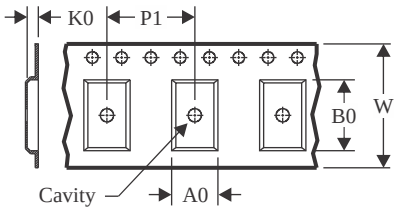

A0	Dimension designed to accommodate the component width
B0	Dimension designed to accommodate the component length
K0	Dimension designed to accommodate the component thickness
W	Overall width of the carrier tape
P1	Pitch between successive cavity centers

QUADRANT ASSIGNMENTS FOR PIN 1 ORIENTATION IN TAPE

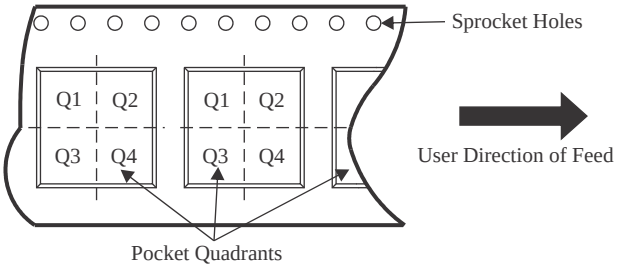

*All dimensions are nominal

Device	Package Type	Package Drawing	Pins	SPQ	Reel Diameter (mm)	Reel Width W1 (mm)	A0 (mm)	B0 (mm)	K0 (mm)	P1 (mm)	W (mm)	Pin1 Quadrant
LMP90077MHE/NOPB	HTSSOP	PWP	28	250	178.0	16.4	6.95	10.0	1.7	8.0	16.0	Q1
LMP90077MHX/NOPB	HTSSOP	PWP	28	2500	330.0	16.4	6.95	10.0	1.7	8.0	16.0	Q1
LMP90078MHE/NOPB	HTSSOP	PWP	28	250	178.0	16.4	6.95	10.0	1.7	8.0	16.0	Q1
LMP90078MHX/NOPB	HTSSOP	PWP	28	2500	330.0	16.4	6.95	10.0	1.7	8.0	16.0	Q1
LMP90079MHE/NOPB	HTSSOP	PWP	28	250	178.0	16.4	6.95	10.0	1.7	8.0	16.0	Q1
LMP90079MHX/NOPB	HTSSOP	PWP	28	2500	330.0	16.4	6.95	10.0	1.7	8.0	16.0	Q1
LMP90080MHE/NOPB	HTSSOP	PWP	28	250	178.0	16.4	6.95	10.0	1.7	8.0	16.0	Q1
LMP90080MHX/NOPB	HTSSOP	PWP	28	2500	330.0	16.4	6.95	10.0	1.7	8.0	16.0	Q1

TAPE AND REEL BOX DIMENSIONS

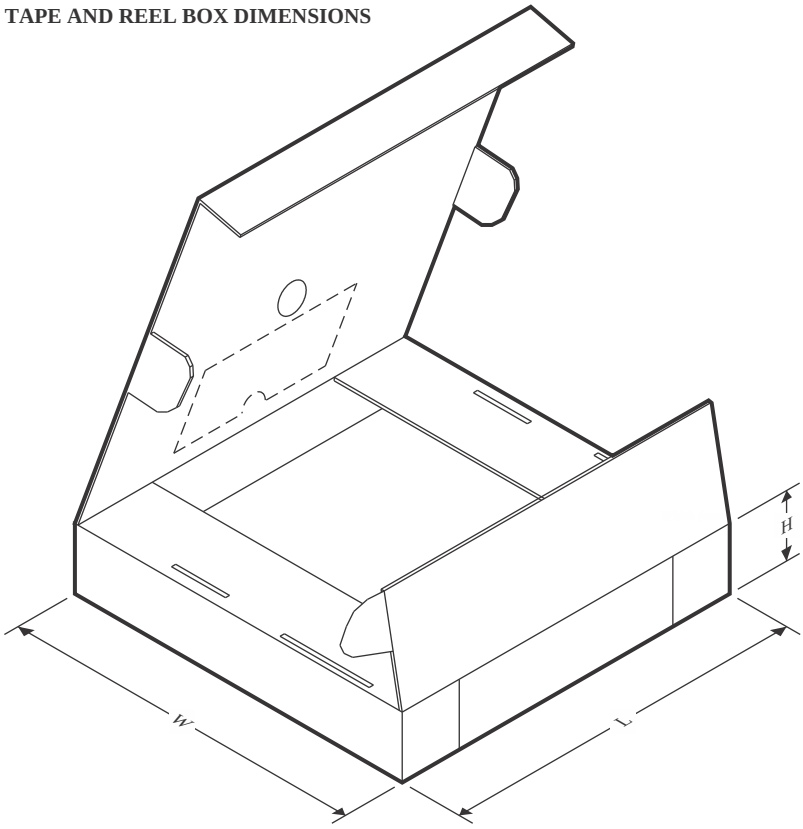

*All dimensions are nominal

Device	Package Type	Package Drawing	Pins	SPQ	Length (mm)	Width (mm)	Height (mm)
LMP90077MHE/NOPB	HTSSOP	PWP	28	250	208.0	191.0	35.0
LMP90077MHX/NOPB	HTSSOP	PWP	28	2500	356.0	356.0	36.0
LMP90078MHE/NOPB	HTSSOP	PWP	28	250	208.0	191.0	35.0
LMP90078MHX/NOPB	HTSSOP	PWP	28	2500	356.0	356.0	36.0
LMP90079MHE/NOPB	HTSSOP	PWP	28	250	208.0	191.0	35.0
LMP90079MHX/NOPB	HTSSOP	PWP	28	2500	356.0	356.0	36.0
LMP90080MHE/NOPB	HTSSOP	PWP	28	250	208.0	191.0	35.0
LMP90080MHX/NOPB	HTSSOP	PWP	28	2500	356.0	356.0	36.0

TUBE

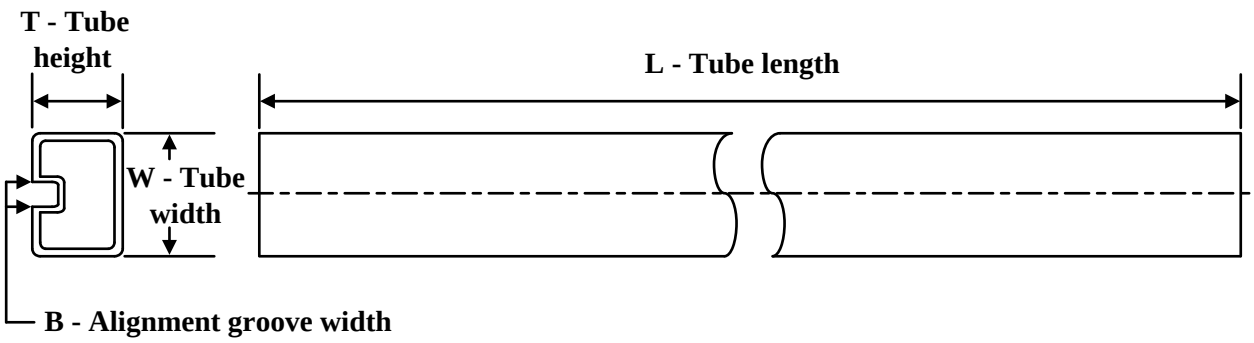

*All dimensions are nominal

Device	Package Name	Package Type	Pins	SPQ	L (mm)	W (mm)	T (µm)	B (mm)
LMP90077MH/NOPB	PWP	HTSSOP	28	48	495	8	2514.6	4.06
LMP90077MH/NOPB.A	PWP	HTSSOP	28	48	495	8	2514.6	4.06
LMP90078MH/NOPB	PWP	HTSSOP	28	48	495	8	2514.6	4.06
LMP90078MH/NOPB.A	PWP	HTSSOP	28	48	495	8	2514.6	4.06
LMP90079MH/NOPB	PWP	HTSSOP	28	48	495	8	2514.6	4.06
LMP90079MH/NOPB.A	PWP	HTSSOP	28	48	495	8	2514.6	4.06
LMP90080MH/NOPB	PWP	HTSSOP	28	48	495	8	2514.6	4.06
LMP90080MH/NOPB.A	PWP	HTSSOP	28	48	495	8	2514.6	4.06

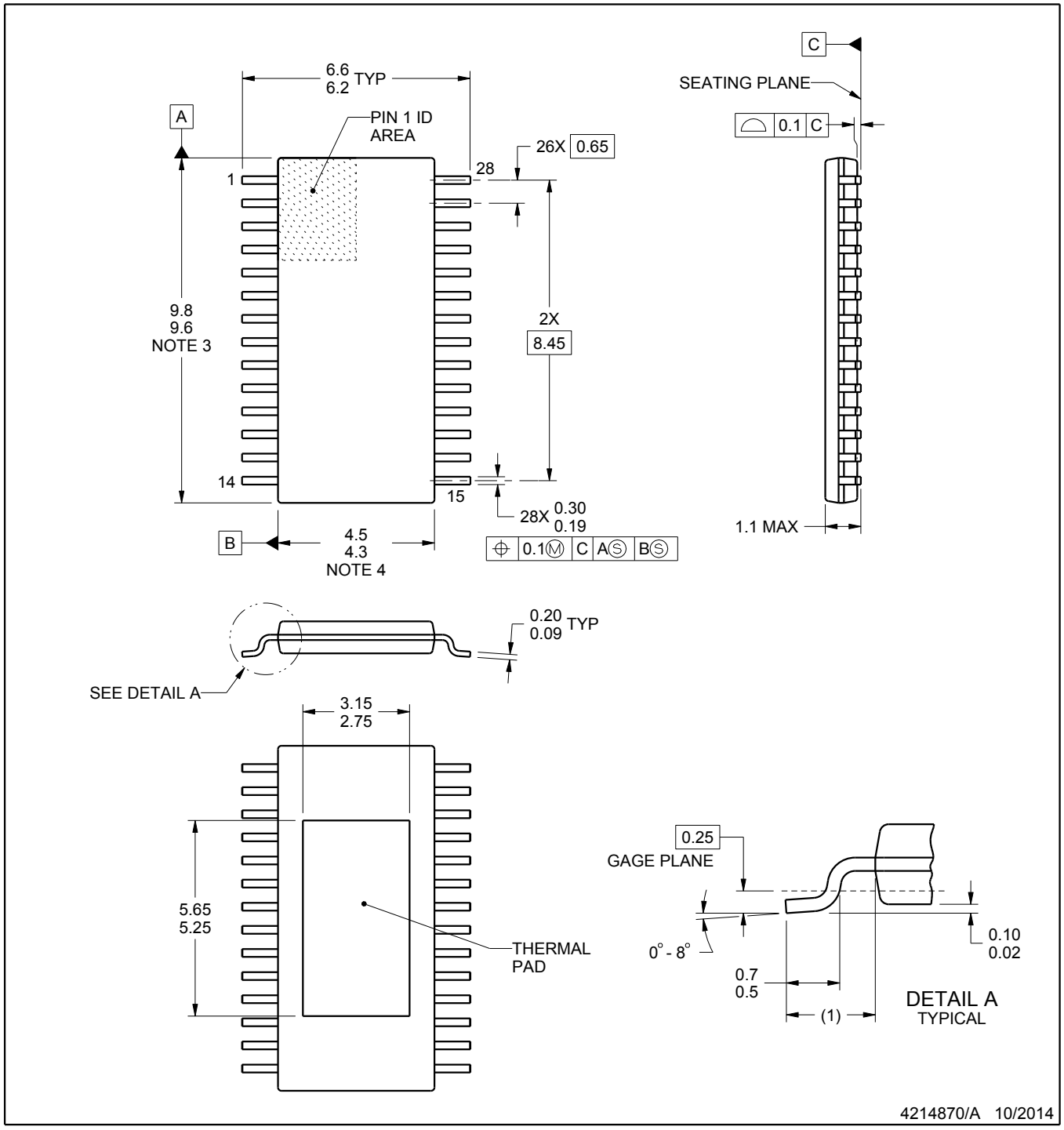

NOTES:

PowerPAD is a trademark of Texas Instruments.

1. All linear dimensions are in millimeters. Any dimensions in parenthesis are for reference only. Dimensioning and tolerancing per ASME Y14.5M.
2. This drawing is subject to change without notice.
3. This dimension does not include mold flash, protrusions, or gate burrs. Mold flash, protrusions, or gate burrs shall not exceed 0.15 mm, per side.
4. This dimension does not include interlead flash. Interlead flash shall not exceed 0.25 mm, per side.
5. Reference JEDEC registration MO-153, variation AET.

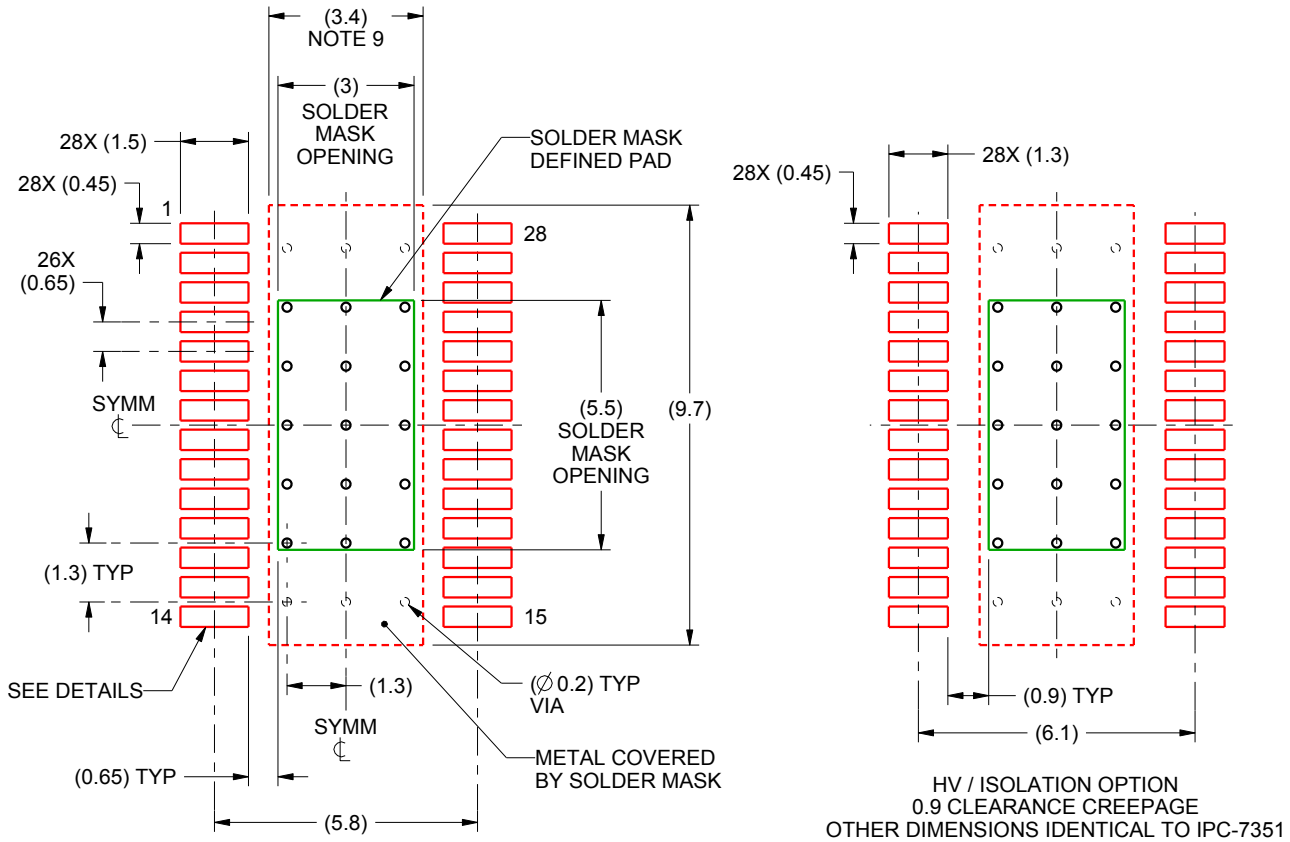

LAND PATTERN EXAMPLE
SCALE:6X

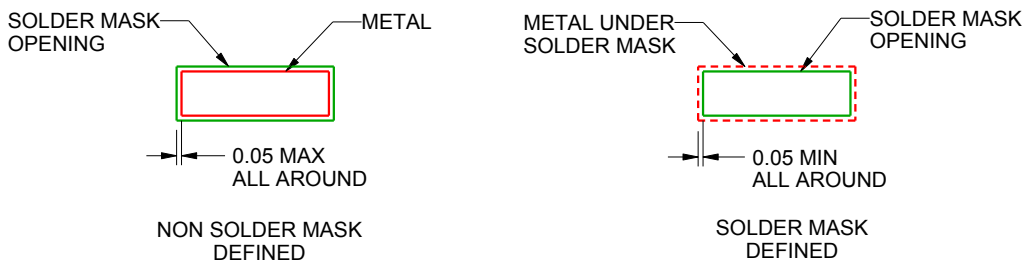

SOLDER MASK DETAILS

4214870/A 10/2014

NOTES: (continued)

6. Publication IPC-7351 may have alternate designs.
7. Solder mask tolerances between and around signal pads can vary based on board fabrication site.
8. This package is designed to be soldered to a thermal pad on the board. For more information, see Texas Instruments literature numbers SLMA002 (www.ti.com/lit/slma002) and SLMA004 (www.ti.com/lit/slma004).
9. Size of metal pad may vary due to creepage requirement.

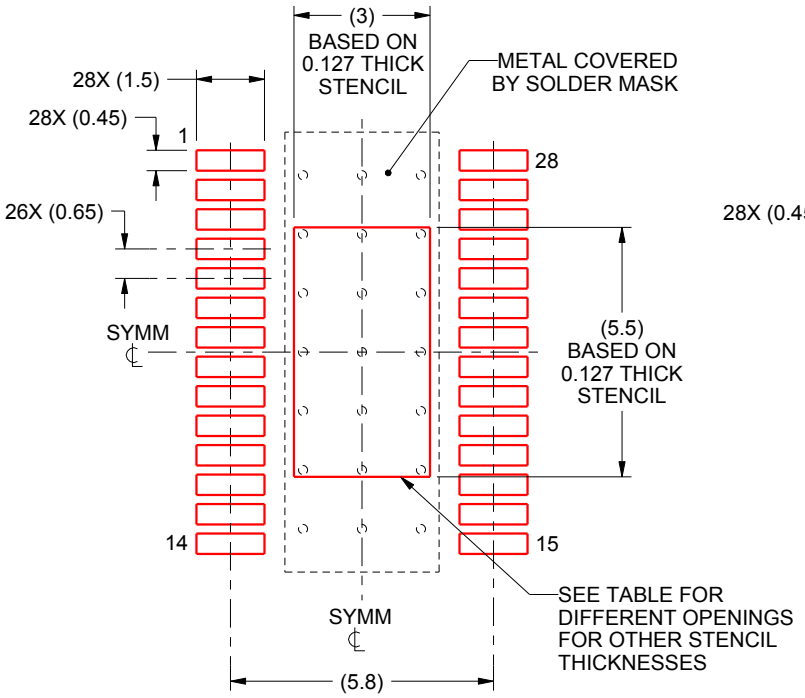

IPC-7351 NOMINAL
0.65 CLEARANCE CREEPAGE

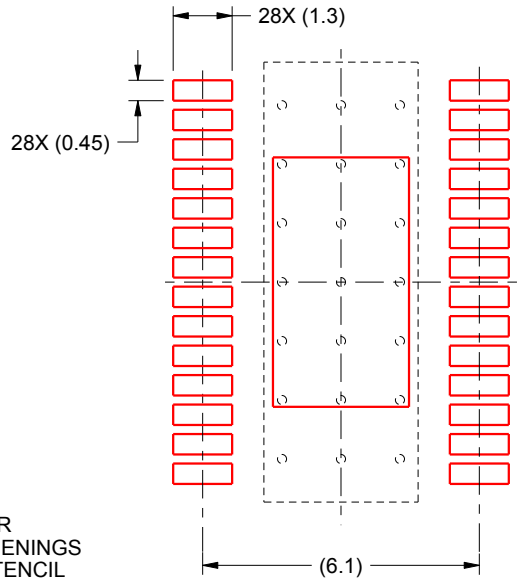

HV / ISOLATION OPTION
0.9 CLEARANCE CREEPAGE
OTHER DIMENSIONS IDENTICAL TO IPC-7351

SOLDER PASTE EXAMPLE
EXPOSED PAD
100% PRINTED SOLDER COVERAGE AREA
SCALE:6X

STENCIL THICKNESS	SOLDER STENCIL OPENING
0.1	3.55 X 6.37
0.127	3.0 X 5.5 (SHOWN)
0.152	2.88 X 5.16
0.178	2.66 X 4.77

4214870/A 10/2014

NOTES: (continued)

10. Laser cutting apertures with trapezoidal walls and rounded corners may offer better paste release. IPC-7525 may have alternate design recommendations.
11. Board assembly site may have different recommendations for stencil design.

重要通知和免责声明

TI“按原样”提供技术和可靠性数据（包括数据表）、设计资源（包括参考设计）、应用或其他设计建议、网络工具、安全信息和其他资源，不保证没有瑕疵且不做出任何明示或暗示的担保，包括但不限于对适销性、某特定用途方面的适用性或不侵犯任何第三方知识产权的暗示担保。

这些资源可供使用 TI 产品进行设计的熟练开发人员使用。您将自行承担以下全部责任：(1) 针对您的应用选择合适的 TI 产品，(2) 设计、验证并测试您的应用，(3) 确保您的应用满足相应标准以及任何其他功能安全、信息安全、监管或其他要求。

这些资源如有变更，恕不另行通知。TI 授权您仅可将这些资源用于研发本资源所述的 TI 产品的相关应用。 严禁以其他方式对这些资源进行复制或展示。您无权使用任何其他 TI 知识产权或任何第三方知识产权。您应全额赔偿因在这些资源的使用中对 TI 及其代表造成的任何索赔、损害、成本、损失和债务，TI 对此概不负责。

TI 提供的产品受 TI 的销售条款或 ti.com 上其他适用条款/TI 产品随附的其他适用条款的约束。TI 提供这些资源并不会扩展或以其他方式更改 TI 针对 TI 产品发布的适用的担保或担保免责声明。

TI 反对并拒绝您可能提出的任何其他或不同的条款。

邮寄地址：Texas Instruments, Post Office Box 655303, Dallas, Texas 75265
版权所有 © 2025，德州仪器 (TI) 公司