CD4013B CMOS Dual D-Type Flip-Flop

1 Features

- Asynchronous Set-Reset Capability
- Static Flip-Flop Operation
- Medium-Speed Operation: 16 MHz (Typical) Clock Toggle Rate at 10-V Supply
- Standardized Symmetrical Output Characteristics
- Maximum Input Current Of 1-µA at 18 V Over Full Package Temperature Range:
  - 100 nA at 18 V and 25°C
- Noise Margin (Over Full Package Temperature Range):
  - 1 V at V_{DD} = 5 V
  - 2 V at V_{DD} = 10 V
  - 2.5 V at V_{DD} = 15 V

2 Applications

- Power Delivery
- Grid Infrastructure
- Medical, Healthcare, and Fitness
- Body Electronics and Lighting
- Building Automation
- Telecom Infrastructure
- Test and Measurement

3 Description

The CD4013B device consists of two identical, independent data-type flip-flops. Each flip-flop has independent data, set, reset, and clock inputs and Q and $\overline{Q}$ outputs. These devices can be used for shift register applications, and, by connecting $\overline{Q}$ output to the data input, for counter and toggle applications. The logic level present at the D input is transferred to the Q output during the positive-going transition of the clock pulse. Setting or resetting is independent of the clock and is accomplished by a high level on the set or reset line, respectively.

The CD4013B types are supplied in 14-pin dual-in-line plastic packages (E suffix), 14-pin small-outline packages (M, MT, M96, and NSR suffixes), and 14-pin thin shrink small-outline packages (PW and PWR suffixes).

Device Information(1)

PART NUMBER	PACKAGE	BODY SIZE (NOM)
CD4013BE	PDIP (14)	19.30 mm x 6.35 mm
CD4013BF	CDIP (14)	19.50 mm x 6.92 mm
CD4013BM	SOIC (14)	8.65 mm x 3.90 mm
CD4013BNS	SO (14)	10.20 mm x 5.30 mm
CD4013BPW	TSSOP (14)	5.00 mm x 4.40 mm

(1) For all available packages, see the orderable addendum at the end of the data sheet.

Logic Diagram

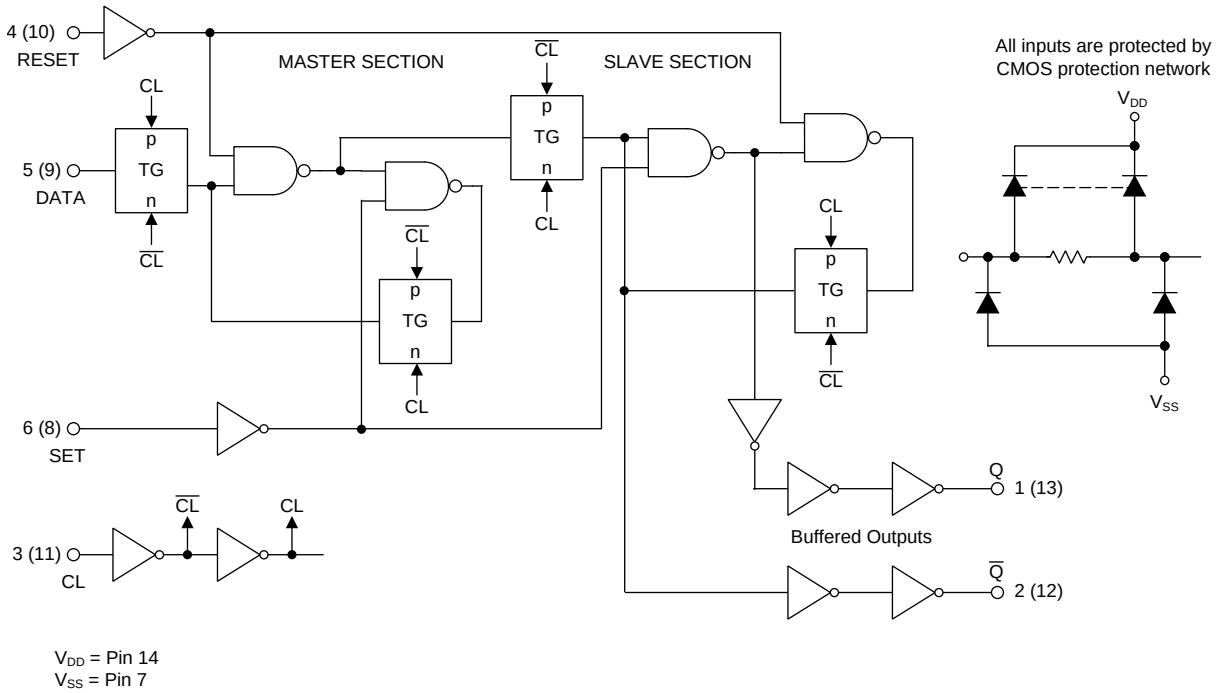

Copyright © 2016, Texas Instruments Incorporated

An IMPORTANT NOTICE at the end of this data sheet addresses availability, warranty, changes, use in safety-critical applications, intellectual property matters and other important disclaimers. PRODUCTION DATA.

Table of Contents

1 Features ... 1
2 Applications ... 1
3 Description ... 1
4 Revision History ... 2
5 Pin Configuration and Functions ... 3
6 Specifications ... 4
6.1 Absolute Maximum Ratings ... 4
6.2 ESD Ratings ... 4
6.3 Recommended Operating Conditions ... 4
6.4 Thermal Information ... 5
6.5 Electrical Characteristics: Static ... 5
6.6 Electrical Characteristics: Dynamic ... 7
6.7 Typical Characteristics ... 8
7 Detailed Description ... 10
7.1 Overview ... 10
7.2 Functional Block Diagram ... 10
7.3 Feature Description ... 10
7.4 Device Functional Modes ... 10
8 Application and Implementation ... 11
8.1 Application Information ... 11
8.2 Typical Application ... 11
9 Power Supply Recommendations ... 12
10 Layout ... 12
10.1 Layout Guidelines ... 12
10.2 Layout Example ... 12
11 Device and Documentation Support ... 14
11.1 Documentation Support ... 14
11.2 Receiving Notification of Documentation Updates 14
11.3 Community Resources ... 14
11.4 Trademarks ... 14
11.5 Electrostatic Discharge Caution ... 14
11.6 Glossary ... 14
12 Mechanical, Packaging, and Orderable Information ... 14

4 Revision History

Changes from Revision D (March 2005) to Revision E — **Page**

- Added *ESD Ratings* table, *Feature Description* section, *Device Functional Modes*, *Application and Implementation* section, *Power Supply Recommendations* section, *Layout* section, *Device and Documentation Support* section, and *Mechanical, Packaging, and Orderable Information* section ... 1
- Added *Thermal Information* table ... 5

Copyright © 1998–2016, Texas Instruments Incorporated

5 Pin Configuration and Functions

D, J, N, NS, PW Package
14-Pin SOIC, CDIP, PDIP, SO, TSSOP
Top View

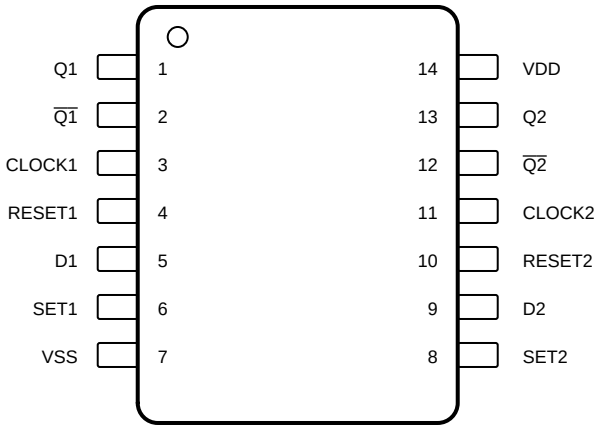

Not to scale

Pin Functions

PIN		I/O	DESCRIPTION
NO.	NAME		
1	Q1	O	Channel 1 output
2	$\overline{Q1}$	O	Inverted channel 1 output
3	CLOCK1	I	Channel 1 clock input
4	RESET1	I	Channel 1 reset
5	D1	I	Channel 1 data input
6	SET1	I	Channel 1 set
7	V_{SS}	—	Ground
8	SET2	I	Channel 2 set
9	D2	I	Channel 2 data input
10	RESET2	I	Channel 2 reset
11	CLOCK2	I	Channel 2 clock input
12	$\overline{Q2}$	O	Inverted channel 2 output
13	Q2	O	Channel 2 output
14	V_{DD}	—	Power supply

Copyright © 1998–2016, Texas Instruments Incorporated

6 Specifications

6.1 Absolute Maximum Ratings

over operating free-air temperature range (unless otherwise noted)[1]

		MIN	MAX	UNIT
DC supply voltage, V_{DD}[2]		–0.5	20	V
Input voltage, all inputs		–0.5	V_{DD} + 0.5	V
DC input current, any one input			10	mA
Power dissipation, P_D	T_A = –55°C to 100°C		500	mW
	T_A = 100°C to 125°C[3]		200	
Device dissipation per output transistor			100	mW
Operating temperature, T_A		–55	125	°C
Storage temperature, T_{stg}		–65	150	°C

(1) Stresses beyond those listed under *Absolute Maximum Ratings* may cause permanent damage to the device. These are stress ratings only, which do not imply functional operation of the device at these or any other conditions beyond those indicated under *Recommended Operating Conditions*. Exposure to absolute-maximum-rated conditions for extended periods may affect device reliability.
(2) Voltages reference to V_{SS} terminal
(3) Derate linearity at 12 mW/°C

6.2 ESD Ratings

			VALUE	UNIT
$V_{(ESD)}$	Electrostatic discharge	Human-body model (HBM), per ANSI/ESDA/JEDEC JS-001[1]	±2000	V
		Charged-device model (CDM), per JEDEC specification JESD22-C101[2]	±1000	

(1) JEDEC document JEP155 states that 500-V HBM allows safe manufacturing with a standard ESD control process.
(2) JEDEC document JEP157 states that 250-V CDM allows safe manufacturing with a standard ESD control process.

6.3 Recommended Operating Conditions

over operating free-air temperature range (unless otherwise noted)

			MIN	TYP	MAX	UNIT
	Supply voltage		3		18	V
t_S	Data setup time	V_{DD} = 5	40			ns
		V_{DD} = 10	20			
		V_{DD} = 15	15			
t_W	Clock pulse width	V_{DD} = 5	140			ns
		V_{DD} = 10	60			
		V_{DD} = 15	40			
f_{CL}	Clock input frequency	V_{DD} = 5	3.5	7		MHz
		V_{DD} = 10	8	16		
		V_{DD} = 15	12	24		
t_rCL[1] t_fCL	Clock rise or fall time	V_{DD} = 5			15	µs
		V_{DD} = 10			10	
		V_{DD} = 15			5	
t_W	Set or reset pulse width	V_{DD} = 5	180			ns
		V_{DD} = 10	80			
		V_{DD} = 15	50			

(1) If more than one unit is cascaded in a parallel clocked operation, t_rCL must be made less than or equal to the sum of the fixed propagation delay time at 15 pF and the transistion time of the output driving stage for the estimated capacitive load.

Copyright © 1998–2016, Texas Instruments Incorporated

6.4 Thermal Information

THERMAL METRIC[1]		CD4013B				UNIT
		N (PDIP)	D (SOIC)	NS (SO)	PW (TSSOP)	
		14 PINS	14 PINS	14 PINS	14 PINS	
$R_{\theta JA}$	Junction-to-ambient thermal resistance	47.1	92.5	89.3	121	°C/W
$R_{\theta JC(top)}$	Junction-to-case (top) thermal resistance	34.5	54	47.1	49.6	°C/W
$R_{\theta JB}$	Junction-to-board thermal resistance	27.1	46.8	48	62.7	°C/W
ψ_{JT}	Junction-to-top characterization parameter	19.4	19	17	5.9	°C/W
ψ_{JB}	Junction-to-board characterization parameter	27	46.5	47.7	62.1	°C/W

(1) For more information about traditional and new thermal metrics, see the *Semiconductor and IC Package Thermal Metrics* application report.

6.5 Electrical Characteristics: Static

over operating free-air temperature range (unless otherwise noted)

PARAMETER		TEST CONDITIONS		MIN	TYP	MAX	UNIT
I_{DD}max	Quiescent device current	V_{IN} = 0 or 5, V_{DD} = 5	T_A = –55°C			1	µA
			T_A = –40°C			1	
			T_A = 25°C		0.02	1	
			T_A = 85°C			30	
			T_A = 125°C			30	
		V_{IN} = 0 or 10, V_{DD} = 10	T_A = –55°C			2	
			T_A = –40°C			2	
			T_A = 25°C		0.02	2	
			T_A = 85°C			60	
			T_A = 125°C			60	
		V_{IN} = 0 or 15, V_{DD} = 15	T_A = –55°C			4	
			T_A = –40°C			4	
			T_A = 25°C		0.02	4	
			T_A = 85°C			120	
			T_A = 125°C			120	
		V_{IN} = 0 or 20, V_{DD} = 20	T_A = –55°C			20	
			T_A = –40°C			20	
			T_A = 25°C		0.04	20	
			T_A = 85°C			600	
			T_A = 125°C			600	

Copyright © 1998–2016, Texas Instruments Incorporated

Electrical Characteristics: Static (continued)

over operating free-air temperature range (unless otherwise noted)

PARAMETER		TEST CONDITIONS		MIN	TYP	MAX	UNIT
I_{OL}min	Output low (sink) current	V_O = 0.4, V_{IN} = 0 or 5, V_{DD} = 5	T_A = –55°C	0.64			mA
			T_A = –40°C	0.61			
			T_A = 25°C	0.51	1		
			T_A = 85°C	0.42			
			T_A = 125°C	0.36			
		V_O = 0.5, V_{IN} = 0 or 10, V_{DD} = 10	T_A = –55°C	1.6			
			T_A = –40°C	1.5			
			T_A = 25°C	1.3	2.6		
			T_A = 85°C	1.1			
			T_A = 125°C	0.9			
		V_O = 1.5, V_{IN} = 0 or 15, V_{DD} = 15	T_A = –55°C	4.2			
			T_A = –40°C	4			
			T_A = 25°C	3.4	6.8		
			T_A = 85°C	2.8			
			T_A = 125°C	2.4			
I_{OH}min	Output high (source) current	V_O = 4.6, V_{IN} = 0 or 5, V_{DD} = 5	T_A = –55°C	–0.64			mA
			T_A = –40°C	–0.61			
			T_A = 25°C	–0.51	–1		
			T_A = 85°C	–0.42			
			T_A = 125°C	–0.36			
		V_O = 2.5, V_{IN} = 0 or 5, V_{DD} = 5	T_A = –55°C	–2			
			T_A = –40°C	–1.8			
			T_A = 25°C	–1.6	–3.2		
			T_A = 85°C	–1.3			
			T_A = 125°C	–1.15			
		V_O = 9.5, V_{IN} = 0 or 10, V_{DD} = 10	T_A = –55°C	–1.6			
			T_A = –40°C	–1.5			
			T_A = 25°C	–1.3	–2.6		
			T_A = 85°C	–1.1			
			T_A = 125°C	–0.9			
		V_O = 13.5, V_{IN} = 0 or 15, V_{DD} = 15	T_A = –55°C	–4.2			
			T_A = –40°C	–4			
			T_A = 25°C	–3.4	–6.8		
			T_A = 85°C	–2.8			
			T_A = 125°C	–2.4			
V_{OL}max	Low-level output voltage	V_{IN} = 0 or 5, V_{DD} = 5	T_A = –55°C, –40°C, 25°C, 85°C, and 125°C		0	0.05	V
		V_{IN} = 0 or 10, V_{DD} = 10	T_A = –55°C, –40°C, 25°C, 85°C, and 125°C		0	0.05	
		V_{IN} = 0 or 15, V_{DD} = 15	T_A = –55°C, –40°C, 25°C, 85°C, and 125°C		0	0.05	
V_{OH}min	High-level output voltage	V_{IN} = 0 or 5, V_{DD} = 5	T_A = –55°C, –40°C, 25°C, 85°C, and 125°C	4.95	5		V
		V_{IN} = 0 or 10, V_{DD} = 10	T_A = –55°C, –40°C, 25°C, 85°C, and 125°C	9.95	10		
		V_{IN} = 0 or 15, V_{DD} = 15	T_A = –55°C, –40°C, 25°C, 85°C, and 125°C	14.95	15		

Copyright © 1998–2016, Texas Instruments Incorporated

Electrical Characteristics: Static (continued)

over operating free-air temperature range (unless otherwise noted)

PARAMETER		TEST CONDITIONS		MIN	TYP	MAX	UNIT
V_{IL}max	Input low voltage	V_O = 0.5 or 4.5, V_{DD} = 5	T_A = –55°C, –40°C, 25°C, 85°C, and 125°C			1.5	V
		V_O = 1 or 9, V_{DD} = 10	T_A = –55°C, –40°C, 25°C, 85°C, and 125°C			3	
		V_O = 1.5 or 13.5, V_{DD} = 15	T_A = –55°C, –40°C, 25°C, 85°C, and 125°C			4	
V_{IH}min	Input high voltage	V_O = 0.5 or 4.5, V_{DD} = 5	T_A = –55°C, –40°C, 25°C, 85°C, and 125°C	3.5			V
		V_O = 1 or 9, V_{DD} = 10	T_A = –55°C, –40°C, 25°C, 85°C, and 125°C	7			
		V_O = 1.5 or 13.5, V_{DD} = 15	T_A = –55°C, –40°C, 25°C, 85°C, and 125°C	11			
I_{IN}max	Input current	V_{IN} = 0 or 18, V_{DD} = 18	T_A = –55°C			±0.1	µA
			T_A = –40°C			±0.1	
			T_A = 25°C		±10^{-5}	±0.1	
			T_A = 85°C			±1	
			T_A = 125°C			±1	

6.6 Electrical Characteristics: Dynamic

at T_A = 25°C, input t_r, t_f = 20 ns, C_L = 50 pF, R_L = 20 kΩ (unless otherwise noted)

PARAMETER		TEST CONDITIONS	MIN	TYP	MAX	UNIT
t_{PHL}, t_{PLH}	Propagation delay time, clock to Q or $\overline{Q}$ outputs	V_{DD} = 5		150	300	ns
		V_{DD} = 10		65	130	
		V_{DD} = 15		45	90	
t_{PLH}	Set to Q or reset to $\overline{Q}$	V_{DD} = 5		150	300	ns
		V_{DD} = 10		65	130	
		V_{DD} = 15		45	90	
t_{PHL}	Set to $\overline{Q}$ or reset to Q	V_{DD} = 5		200	400	ns
		V_{DD} = 10		85	170	
		V_{DD} = 15		60	120	
t_{THL}, t_{TLH}	Transition time	V_{DD} = 5		100	200	ns
		V_{DD} = 10		50	100	
		V_{DD} = 15		40	80	
f_{CL}	Maximum clock input frequency(1)	V_{DD} = 5	3.5	7		MHz
		V_{DD} = 10	8	16		
		V_{DD} = 15	12	24		
t_W	Minimum clock pulse width	V_{DD} = 5		70	140	ns
		V_{DD} = 10		30	60	
		V_{DD} = 15		20	40	
	Minimum set or reset pulse width	V_{DD} = 5		90	180	ns
		V_{DD} = 10		40	80	
		V_{DD} = 15		25	50	
t_S	Minimum data setup time	V_{DD} = 5		20	40	ns
		V_{DD} = 10		10	20	
		V_{DD} = 15		7	15	
t_H	Minimum data hold time	V_{DD} = 5, 10, 15		2	5	ns

(1) Input t_r, t_f = 5 ns

Copyright © 1998–2016, Texas Instruments Incorporated

Electrical Characteristics: Dynamic (continued)

at T_A = 25°C, input t_r, t_f = 20 ns, C_L = 50 pF, R_L = 20 kΩ (unless otherwise noted)

PARAMETER		TEST CONDITIONS	MIN	TYP	MAX	UNIT
t_rCL, t_fCL	Clock input rise or fall time	V_{DD} = 5			15	µs
		V_{DD} = 10			10	
		V_{DD} = 15			5	
C_{IN}	Input capacitance	Any input		5	7.5	pF

6.7 Typical Characteristics

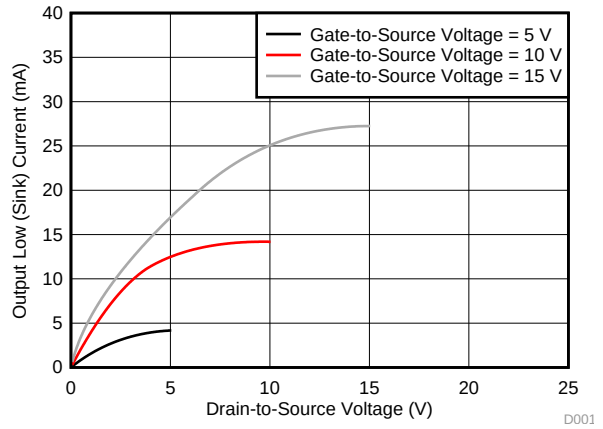

Figure 1. Typical Output Low (Sink) Current

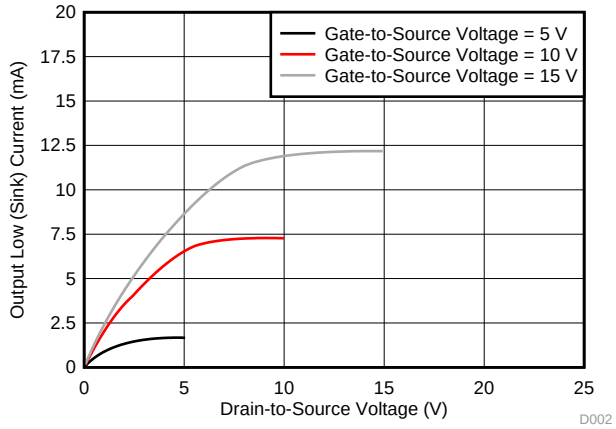

Figure 2. Minimum Output Low (Sink) Current

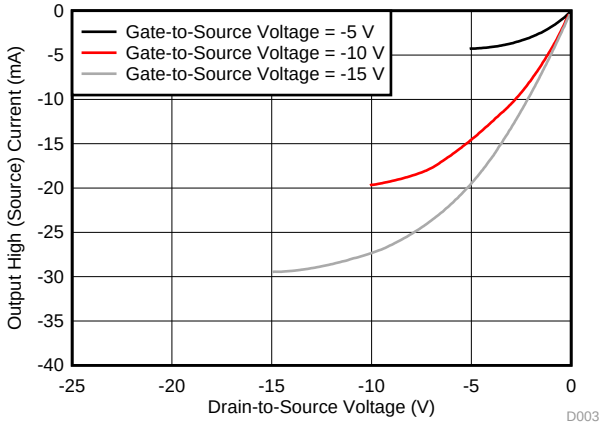

Figure 3. Typical Output High (Source) Current

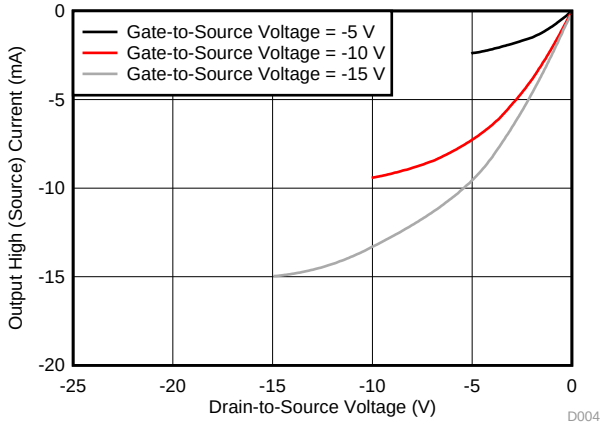

Figure 4. Minimum Output High (Source) Current

Copyright © 1998–2016, Texas Instruments Incorporated

Typical Characteristics (continued)

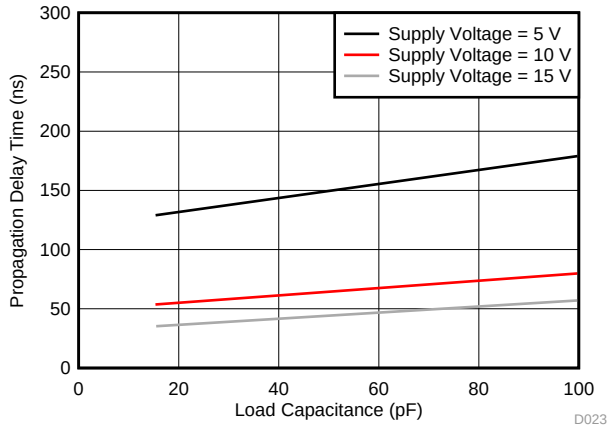

CLOCK or SET to Q, CLOCK or RESET to $\overline{Q}$

Figure 5. Typical Propagation Delay Time vs Load Capacitance

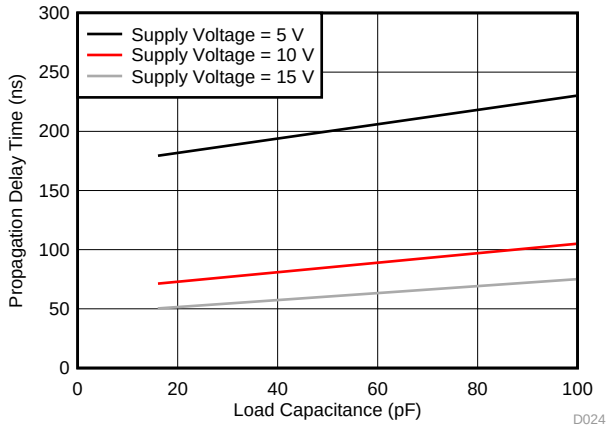

SET to $\overline{Q}$ or RESET to Q

Figure 6. Typical Propagation Delay Time vs Load Capacitance

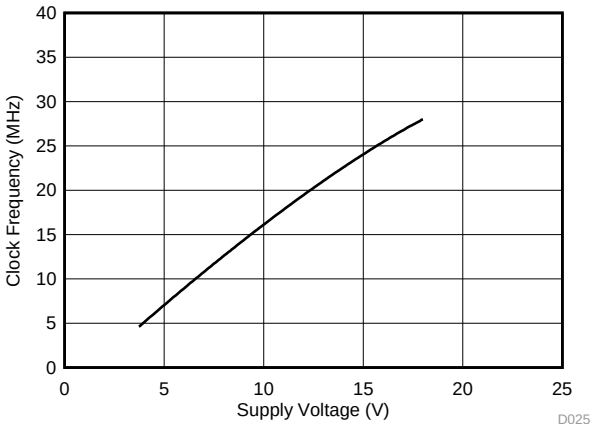

Figure 7. Typical Maximum Clock Frequency vs Supply Voltage

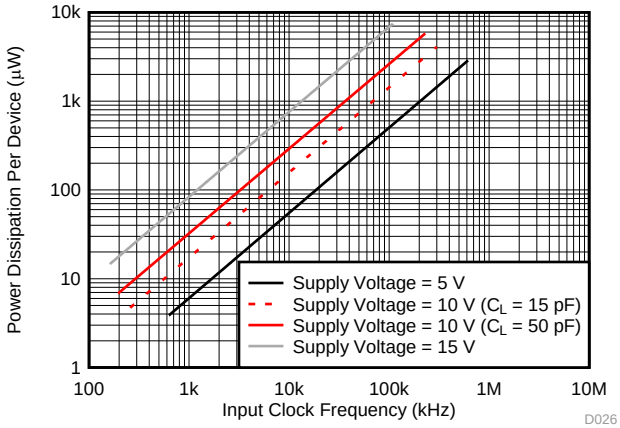

Figure 8. Typical Power Dissipation vs Frequency

7 Detailed Description

7.1 Overview

The CD4013B device consists of two identical, independent data-type flip-flops. Each flip-flop has independent data, set, reset, and clock inputs and Q and $\overline{Q}$ outputs. These devices are ideal for data and memory hold functions, including shift register applications, or by connecting $\overline{Q}$ output to the data input, this device is used for counter and toggle applications. The CD4013B is a positive-edge triggered device, meaning that the logic level present at the D input is transferred to the Q output during the positive-going transition of the clock pulse. Setting or resetting is independent of the clock and is accomplished by a high level on the set or reset line, respectively.

7.2 Functional Block Diagram

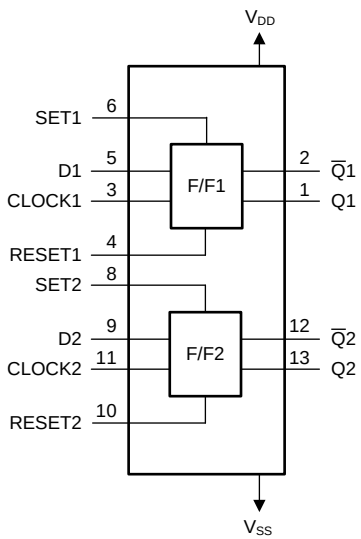

Copyright © 2016, Texas Instruments Incorporated

7.3 Feature Description

CD4013B has standardized symmetrical output characteristics and a wide operating voltage range from 3 V to 18 V with quiescent current tested at 20 V. This has a medium operation speed –t_{PHL}, t_{PLH} = 30 ns (typical) at 10 V. The operating temperature is from –55°C to 125°C.

7.4 Device Functional Modes

Table 1 lists the functional modes of the CD4013B.

Table 1. Function Table

INPUTS				OUTPUT (Q)	INVERTED OUTPUT ($\overline{Q}$)
CLOCK	SET	RESET	D		
↑	0	0	0	0	1
↑	0	0	1	1	0
↓	0	0	X	Q_0	$\overline{Q}$
X	0	1	X	0	1
X	1	0	X	1	0
X	1	1	X	1	1

Copyright © 1998–2016, Texas Instruments Incorporated

8 Application and Implementation

NOTE

Information in the following applications sections is not part of the TI component specification, and TI does not warrant its accuracy or completeness. TI's customers are responsible for determining suitability of components for their purposes. Customers should validate and test their design implementation to confirm system functionality.

8.1 Application Information

A high level at the SET or RESET inputs sets or resets the outputs, regardless of the levels of the other inputs. When SET and RESET are inactive (low), data at the data (D) input meeting the setup time requirements is transferred to the outputs on the positive-going edge of the clock pulse. Clock triggering occurs at a voltage level and is not related directly to the rise time of the clock pulse. Following the hold-time interval, data at the D input can be changed without affecting the levels at the outputs. The resistor and capacitor at the RESET pin are optional. If they are not used, the RESET and SET pin must be connected directly to ground to be inactive.

8.2 Typical Application

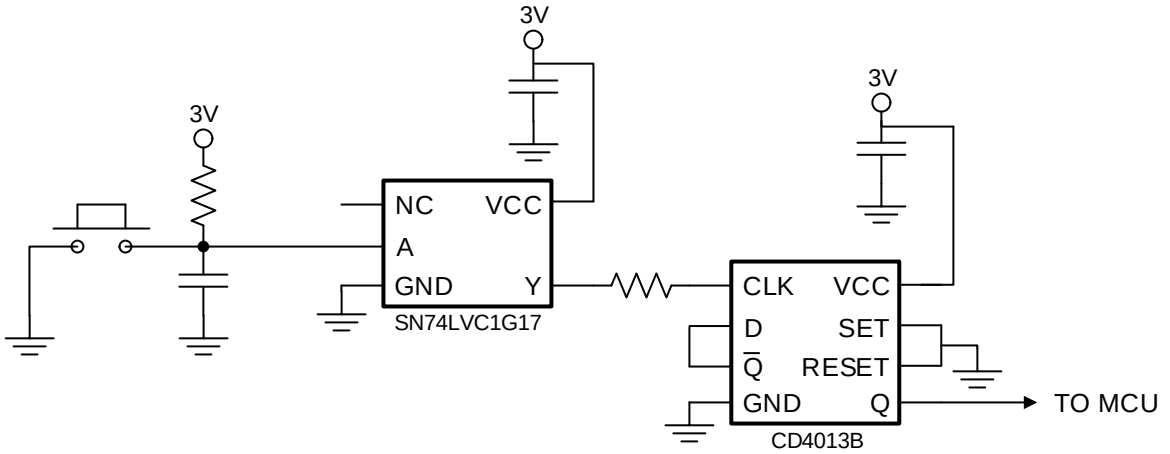

Copyright © 2016, Texas Instruments Incorporated

Figure 9. Power Button Circuit

8.2.1 Design Requirements

Input signals must be designed and implemented so that they do not exceed the voltage level of the power supply.

8.2.2 Detailed Design Procedure

The recommended input conditions for this application example includes rise time and fall time specifications (see Δt/ΔV in *Recommended Operating Conditions*) and specified high and low levels (see VIH and VIL in *Recommended Operating Conditions*). Inputs are not overvoltage tolerant and must be below V_{CC} level because of the presence of input clamp diodes to V_{CC}. The recommended output condition for the CD4013B application includes specific load currents. Load currents must be limited so as to not exceed the total power (continuous current through V_{CC} or GND) for the device. These limits are located in *Absolute Maximum Ratings*. Outputs must not be pulled above V_{CC}.

Typical Application (continued)

8.2.3 Application Curve

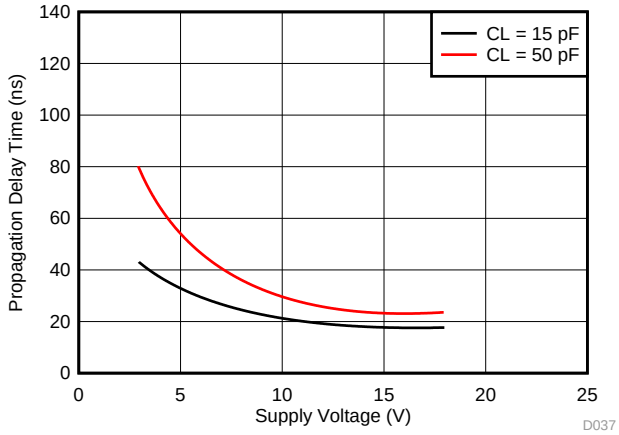

Figure 10. Typical Transition Time vs Load Capacitance

9 Power Supply Recommendations

The power supply can be any voltage between the minimum and maximum supply voltage rating located in *Recommended Operating Conditions*. Each V_{CC} pin must have a good bypass capacitor to prevent power disturbance. For devices with a single supply, TI recommends a 0.1-µF capacitor. If there are multiple V_{CC} pins, then TI recommends a 0.01-µF or 0.022-µF capacitor for each power pin. It is acceptable to parallel multiple bypass capacitors to reject different frequencies of noise. 0.1-µF and 1-µF capacitors are commonly used in parallel. The bypass capacitor must be installed as close to the power pin as possible for best results.

10 Layout

10.1 Layout Guidelines

When using multiple bit logic devices, inputs must never float.

In many cases, digital logic device functions or parts of these functions are unused (for example, when only two inputs of a triple-input and gate are used, or only 3 of the 4 buffer gates are used). Such input pins must not be left unconnected because the undefined voltages at the outside connections result in undefined operational states. This rule must be observed under all circumstances specified in the next paragraph.

All unused inputs of digital logic devices must be connected to a high or low bias to prevent them from floating. See application note, *Implications of Slow or Floating CMOS Inputs* (SCBA004), for more information on the effects of floating inputs. The logic level must apply to any particular unused input depending on the function of the device. Generally, they are tied to GND or V_{CC} (whichever is convenient).

10.2 Layout Example

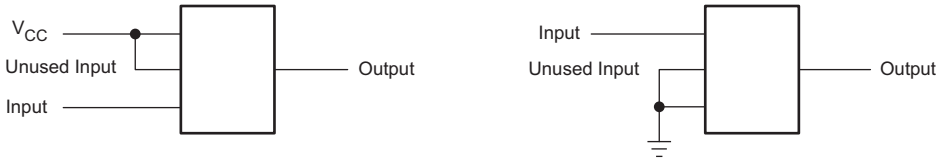

Figure 11. Layout Example for CD4013B

Copyright © 1998–2016, Texas Instruments Incorporated

Layout Example (continued)

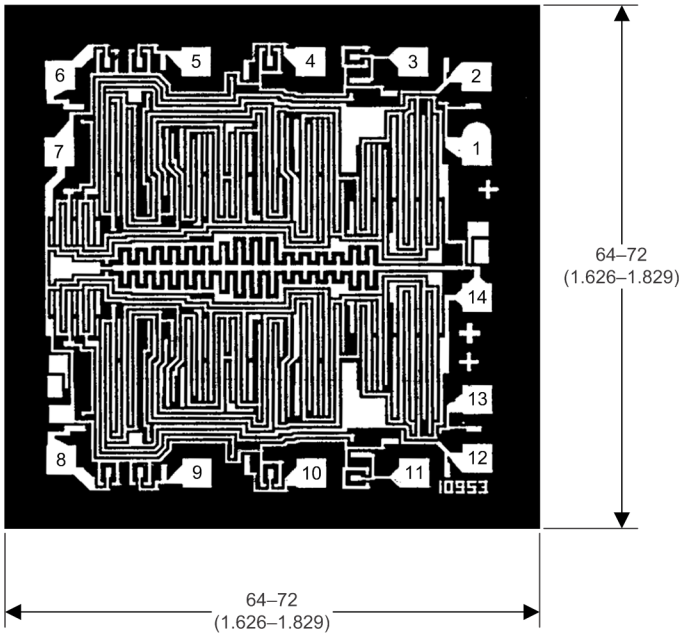

Figure 12. Dimensions and Pad Layout for CD4013B

11 Device and Documentation Support

11.1 Documentation Support

11.1.1 Related Documentation

For related documentation see the following:

Implications of Slow or Floating CMOS Inputs (SCBA004)

11.2 Receiving Notification of Documentation Updates

To receive notification of documentation updates, navigate to the device product folder on ti.com. In the upper right corner, click on *Alert me* to register and receive a weekly digest of any product information that has changed. For change details, review the revision history included in any revised document.

11.3 Community Resources

The following links connect to TI community resources. Linked contents are provided "AS IS" by the respective contributors. They do not constitute TI specifications and do not necessarily reflect TI's views; see TI's Terms of Use.

TI E2E™ Online Community ***TI's Engineer-to-Engineer (E2E) Community.*** Created to foster collaboration among engineers. At e2e.ti.com, you can ask questions, share knowledge, explore ideas and help solve problems with fellow engineers.

Design Support ***TI's Design Support*** Quickly find helpful E2E forums along with design support tools and contact information for technical support.

11.4 Trademarks

E2E is a trademark of Texas Instruments.
All other trademarks are the property of their respective owners.

11.5 Electrostatic Discharge Caution

These devices have limited built-in ESD protection. The leads should be shorted together or the device placed in conductive foam during storage or handling to prevent electrostatic damage to the MOS gates.

11.6 Glossary

SLYZ022 — *TI Glossary*.

This glossary lists and explains terms, acronyms, and definitions.

12 Mechanical, Packaging, and Orderable Information

The following pages include mechanical, packaging, and orderable information. This information is the most current data available for the designated devices. This data is subject to change without notice and revision of this document. For browser-based versions of this data sheet, refer to the left-hand navigation.

Copyright © 1998–2016, Texas Instruments Incorporated

PACKAGING INFORMATION

Orderable part number	Status (1)	Material type (2)	Package | Pins	Package qty | Carrier	RoHS (3)	Lead finish/ Ball material (4)	MSL rating/ Peak reflow (5)	Op temp (°C)	Part marking (6)
CD4013BE	Active	Production	PDIP (N) | 14	25 | TUBE	Yes	NIPDAU	N/A for Pkg Type	-55 to 125	CD4013BE
CD4013BE.A	Active	Production	PDIP (N) | 14	25 | TUBE	Yes	NIPDAU	N/A for Pkg Type	-55 to 125	CD4013BE
CD4013BEE4	Active	Production	PDIP (N) | 14	25 | TUBE	Yes	NIPDAU	N/A for Pkg Type	-55 to 125	CD4013BE
CD4013BF	Active	Production	CDIP (J) | 14	25 | TUBE	No	SNPB	N/A for Pkg Type	-55 to 125	CD4013BF
CD4013BF.A	Active	Production	CDIP (J) | 14	25 | TUBE	No	SNPB	N/A for Pkg Type	-55 to 125	CD4013BF
CD4013BF3A	Active	Production	CDIP (J) | 14	25 | TUBE	No	SNPB	N/A for Pkg Type	-55 to 125	CD4013BF3A
CD4013BF3A.A	Active	Production	CDIP (J) | 14	25 | TUBE	No	SNPB	N/A for Pkg Type	-55 to 125	CD4013BF3A
CD4013BM	Active	Production	SOIC (D) | 14	50 | TUBE	Yes	NIPDAU	Level-1-260C-UNLIM	-55 to 125	CD4013BM
CD4013BM.A	Active	Production	SOIC (D) | 14	50 | TUBE	Yes	NIPDAU	Level-1-260C-UNLIM	-55 to 125	CD4013BM
CD4013BM96	Active	Production	SOIC (D) | 14	2500 | LARGE T&R	Yes	NIPDAU	Level-1-260C-UNLIM	-55 to 125	CD4013BM
CD4013BM96.A	Active	Production	SOIC (D) | 14	2500 | LARGE T&R	Yes	NIPDAU	Level-1-260C-UNLIM	-55 to 125	CD4013BM
CD4013BM96E4	Active	Production	SOIC (D) | 14	2500 | LARGE T&R	Yes	NIPDAU	Level-1-260C-UNLIM	-55 to 125	CD4013BM
CD4013BM96G4	Active	Production	SOIC (D) | 14	2500 | LARGE T&R	Yes	NIPDAU	Level-1-260C-UNLIM	-55 to 125	CD4013BM
CD4013BM96G4.A	Active	Production	SOIC (D) | 14	2500 | LARGE T&R	Yes	NIPDAU	Level-1-260C-UNLIM	-55 to 125	CD4013BM
CD4013BME4	Active	Production	SOIC (D) | 14	50 | TUBE	Yes	NIPDAU	Level-1-260C-UNLIM	-55 to 125	CD4013BM
CD4013BMG4	Active	Production	SOIC (D) | 14	50 | TUBE	Yes	NIPDAU	Level-1-260C-UNLIM	-55 to 125	CD4013BM
CD4013BMT	Obsolete	Production	SOIC (D) | 14	-	-	Call TI	Call TI	-55 to 125	CD4013BM
CD4013BNSR	Active	Production	SOP (NS) | 14	2000 | LARGE T&R	Yes	NIPDAU	Level-1-260C-UNLIM	-55 to 125	CD4013B
CD4013BNSR.A	Active	Production	SOP (NS) | 14	2000 | LARGE T&R	Yes	NIPDAU	Level-1-260C-UNLIM	-55 to 125	CD4013B
CD4013BPW	Obsolete	Production	TSSOP (PW) | 14	-	-	Call TI	Call TI	-55 to 125	CM013B
CD4013BPWR	Active	Production	TSSOP (PW) | 14	2000 | LARGE T&R	Yes	NIPDAU	Level-1-260C-UNLIM	-55 to 125	CM013B
CD4013BPWR.A	Active	Production	TSSOP (PW) | 14	2000 | LARGE T&R	Yes	NIPDAU	Level-1-260C-UNLIM	-55 to 125	CM013B
CD4013BPWRE4	Active	Production	TSSOP (PW) | 14	2000 | LARGE T&R	Yes	NIPDAU	Level-1-260C-UNLIM	-55 to 125	CM013B
CD4013BPWRG4	Active	Production	TSSOP (PW) | 14	2000 | LARGE T&R	Yes	NIPDAU	Level-1-260C-UNLIM	-55 to 125	CM013B
JM38510/05151BCA	Active	Production	CDIP (J) | 14	25 | TUBE	No	SNPB	N/A for Pkg Type	-55 to 125	JM38510/ 05151BCA
JM38510/05151BCA.A	Active	Production	CDIP (J) | 14	25 | TUBE	No	SNPB	N/A for Pkg Type	-55 to 125	JM38510/ 05151BCA
M38510/05151BCA	Active	Production	CDIP (J) | 14	25 | TUBE	No	SNPB	N/A for Pkg Type	-55 to 125	JM38510/ 05151BCA

(1) **Status:** For more details on status, see our product life cycle.

(2) **Material type:** When designated, preproduction parts are prototypes/experimental devices, and are not yet approved or released for full production. Testing and final process, including without limitation quality assurance, reliability performance testing, and/or process qualification, may not yet be complete, and this item is subject to further changes or possible discontinuation. If available for ordering, purchases will be subject to an additional waiver at checkout, and are intended for early internal evaluation purposes only. These items are sold without warranties of any kind.

(3) **RoHS values:** Yes, No, RoHS Exempt. See the TI RoHS Statement for additional information and value definition.

(4) **Lead finish/Ball material:** Parts may have multiple material finish options. Finish options are separated by a vertical ruled line. Lead finish/Ball material values may wrap to two lines if the finish value exceeds the maximum column width.

(5) **MSL rating/Peak reflow:** The moisture sensitivity level ratings and peak solder (reflow) temperatures. In the event that a part has multiple moisture sensitivity ratings, only the lowest level per JEDEC standards is shown. Refer to the shipping label for the actual reflow temperature that will be used to mount the part to the printed circuit board.

(6) **Part marking:** There may be an additional marking, which relates to the logo, the lot trace code information, or the environmental category of the part.

Multiple part markings will be inside parentheses. Only one part marking contained in parentheses and separated by a "~" will appear on a part. If a line is indented then it is a continuation of the previous line and the two combined represent the entire part marking for that device.

Important Information and Disclaimer: The information provided on this page represents TI's knowledge and belief as of the date that it is provided. TI bases its knowledge and belief on information provided by third parties, and makes no representation or warranty as to the accuracy of such information. Efforts are underway to better integrate information from third parties. TI has taken and continues to take reasonable steps to provide representative and accurate information but may not have conducted destructive testing or chemical analysis on incoming materials and chemicals. TI and TI suppliers consider certain information to be proprietary, and thus CAS numbers and other limited information may not be available for release.

In no event shall TI's liability arising out of such information exceed the total purchase price of the TI part(s) at issue in this document sold by TI to Customer on an annual basis.

OTHER QUALIFIED VERSIONS OF CD4013B, CD4013B-MIL :

- Catalog : CD4013B
- Military : CD4013B-MIL

NOTE: Qualified Version Definitions:

- Catalog - TI's standard catalog product
- Military - QML certified for Military and Defense Applications

TAPE AND REEL INFORMATION

REEL DIMENSIONS

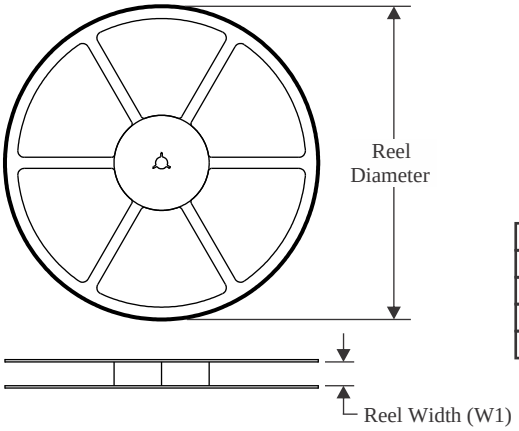

TAPE DIMENSIONS

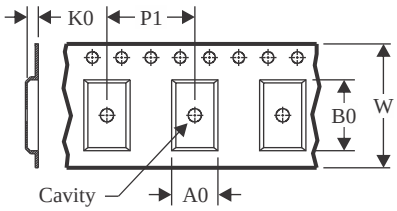

A0	Dimension designed to accommodate the component width
B0	Dimension designed to accommodate the component length
K0	Dimension designed to accommodate the component thickness
W	Overall width of the carrier tape
P1	Pitch between successive cavity centers

QUADRANT ASSIGNMENTS FOR PIN 1 ORIENTATION IN TAPE

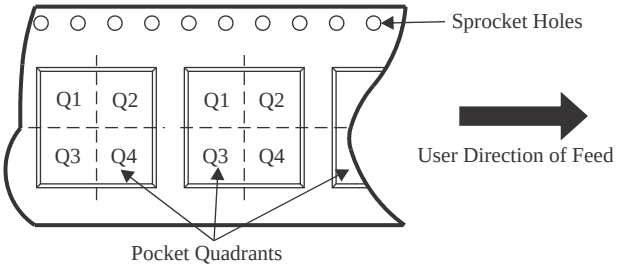

*All dimensions are nominal

Device	Package Type	Package Drawing	Pins	SPQ	Reel Diameter (mm)	Reel Width W1 (mm)	A0 (mm)	B0 (mm)	K0 (mm)	P1 (mm)	W (mm)	Pin1 Quadrant
CD4013BM96	SOIC	D	14	2500	330.0	16.4	6.5	9.0	2.1	8.0	16.0	Q1
CD4013BM96G4	SOIC	D	14	2500	330.0	16.4	6.5	9.0	2.1	8.0	16.0	Q1
CD4013BNSR	SOP	NS	14	2000	330.0	16.4	8.45	10.55	2.5	12.0	16.2	Q1
CD4013BPWR	TSSOP	PW	14	2000	330.0	12.4	6.9	5.6	1.6	8.0	12.0	Q1

TAPE AND REEL BOX DIMENSIONS

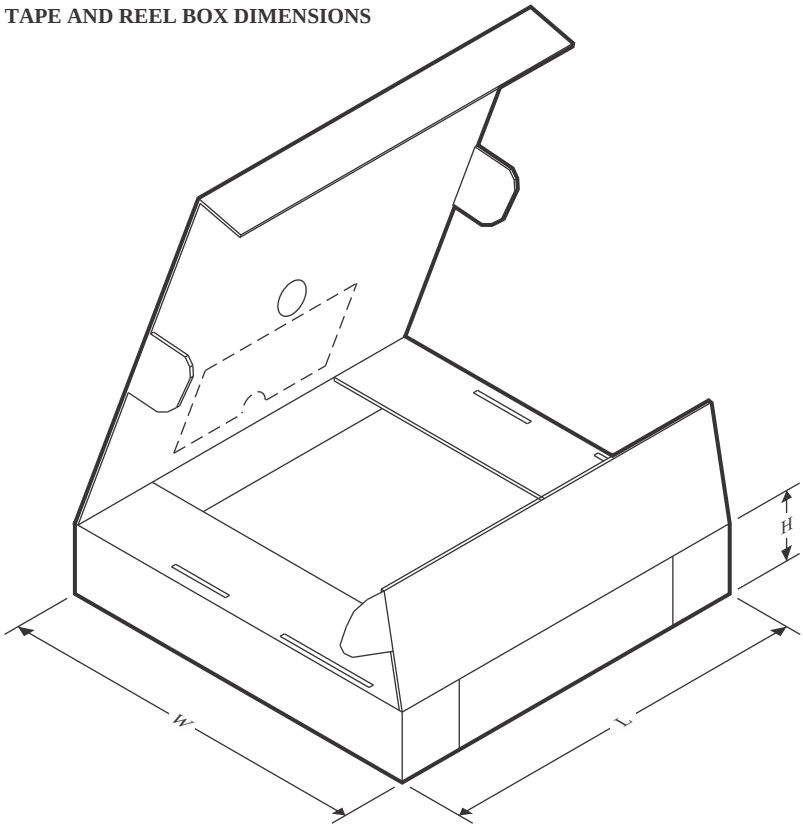

*All dimensions are nominal

Device	Package Type	Package Drawing	Pins	SPQ	Length (mm)	Width (mm)	Height (mm)
CD4013BM96	SOIC	D	14	2500	356.0	356.0	35.0
CD4013BM96G4	SOIC	D	14	2500	356.0	356.0	35.0
CD4013BNSR	SOP	NS	14	2000	356.0	356.0	35.0
CD4013BPWR	TSSOP	PW	14	2000	356.0	356.0	35.0

TUBE

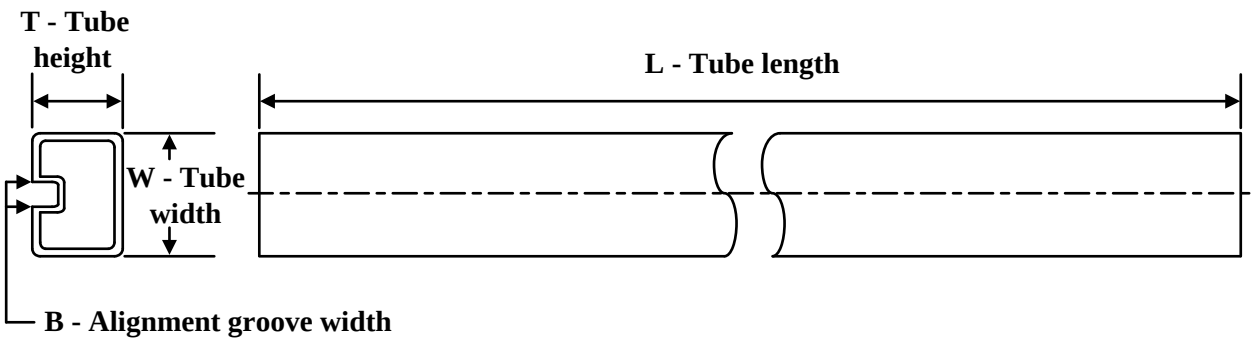

*All dimensions are nominal

Device	Package Name	Package Type	Pins	SPQ	L (mm)	W (mm)	T (µm)	B (mm)
CD4013BE	N	PDIP	14	25	506	13.97	11230	4.32
CD4013BE.A	N	PDIP	14	25	506	13.97	11230	4.32
CD4013BEE4	N	PDIP	14	25	506	13.97	11230	4.32
CD4013BM	D	SOIC	14	50	506.6	8	3940	4.32
CD4013BM.A	D	SOIC	14	50	506.6	8	3940	4.32
CD4013BME4	D	SOIC	14	50	506.6	8	3940	4.32
CD4013BMG4	D	SOIC	14	50	506.6	8	3940	4.32

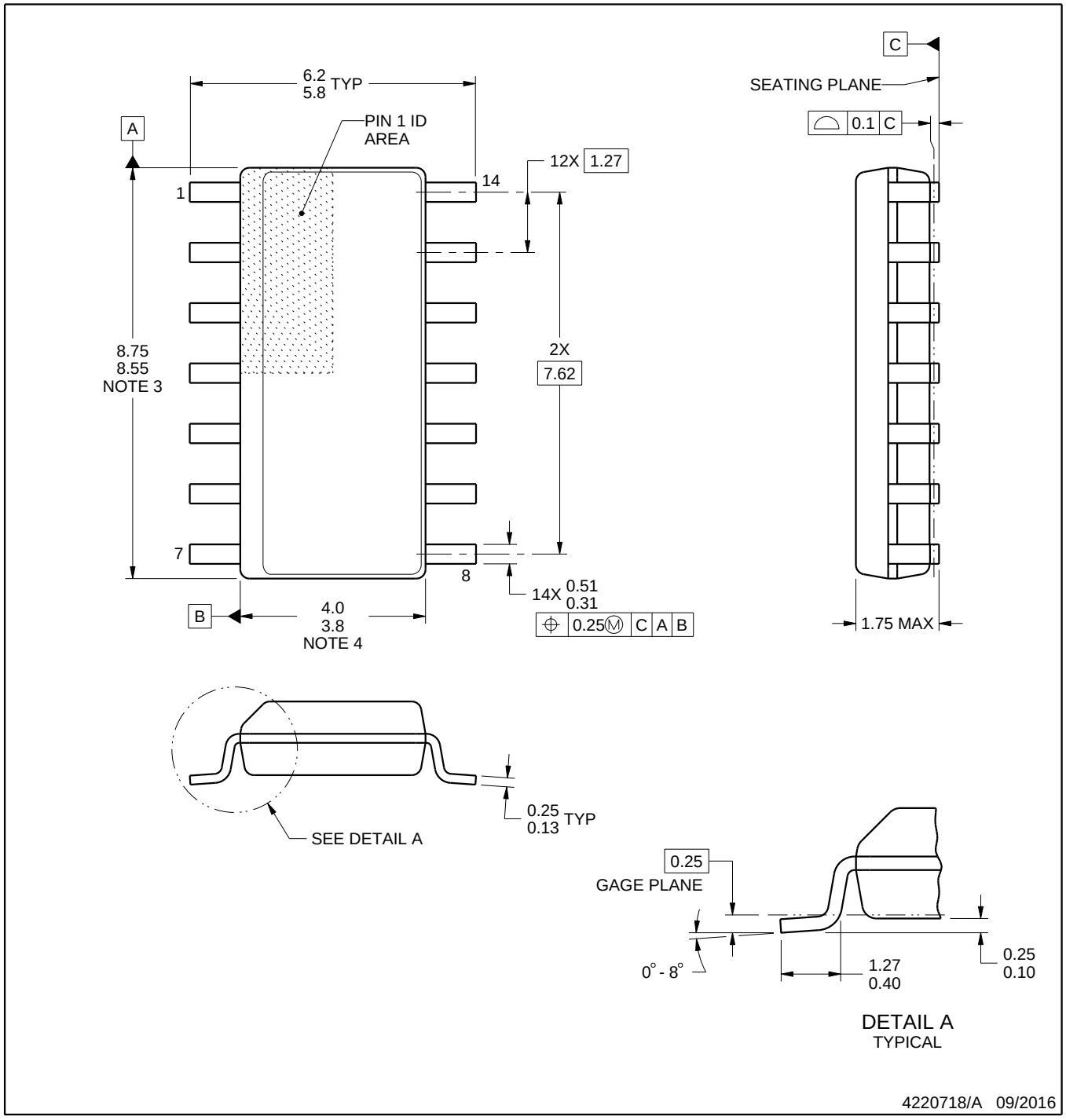

NOTES:

1. All linear dimensions are in millimeters. Dimensions in parenthesis are for reference only. Dimensioning and tolerancing per ASME Y14.5M.
2. This drawing is subject to change without notice.
3. This dimension does not include mold flash, protrusions, or gate burrs. Mold flash, protrusions, or gate burrs shall not exceed 0.15 mm, per side.
4. This dimension does not include interlead flash. Interlead flash shall not exceed 0.43 mm, per side.
5. Reference JEDEC registration MS-012, variation AB.

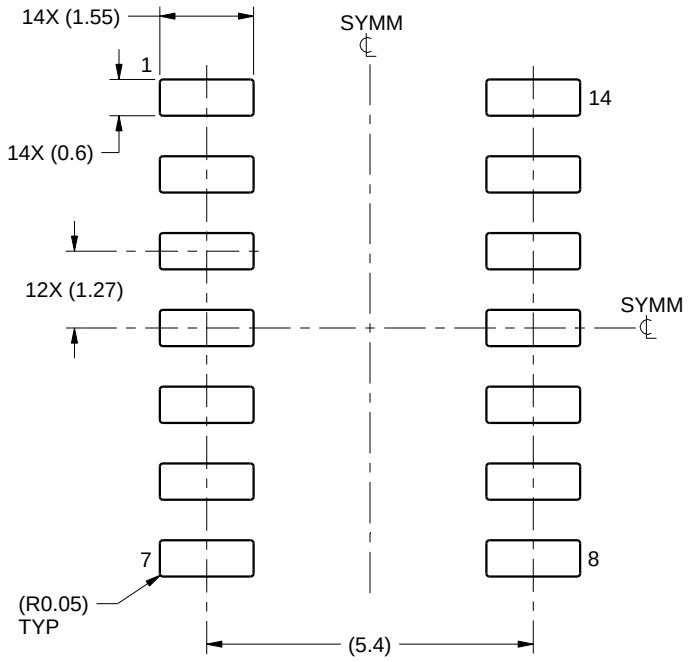

LAND PATTERN EXAMPLE
SCALE:8X

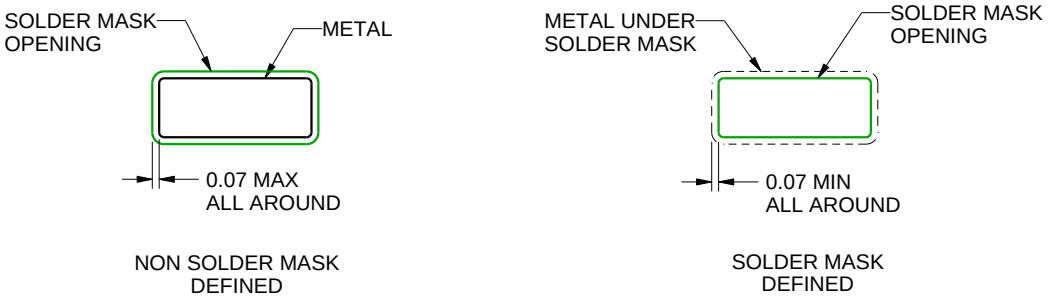

SOLDER MASK DETAILS

4220718/A 09/2016

NOTES: (continued)

6. Publication IPC-7351 may have alternate designs.
7. Solder mask tolerances between and around signal pads can vary based on board fabrication site.

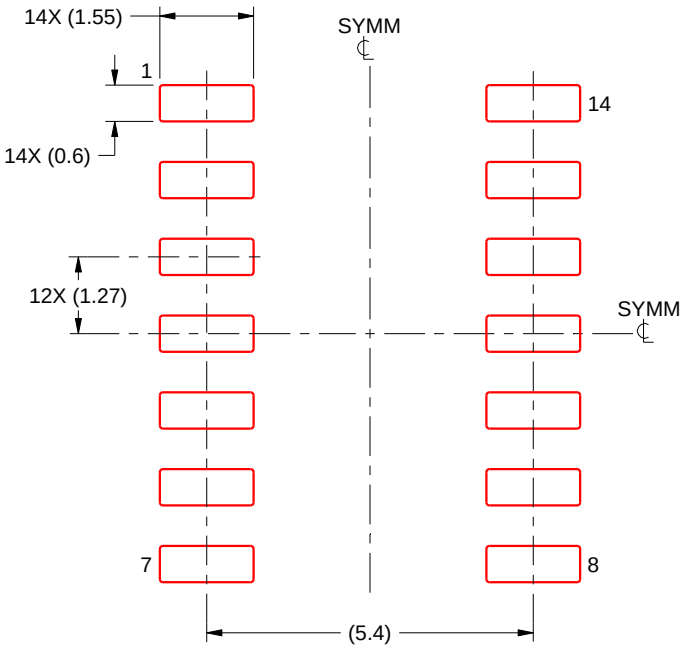

SOLDER PASTE EXAMPLE
BASED ON 0.125 mm THICK STENCIL
SCALE:8X

4220718/A 09/2016

NOTES: (continued)

8. Laser cutting apertures with trapezoidal walls and rounded corners may offer better paste release. IPC-7525 may have alternate design recommendations.
9. Board assembly site may have different recommendations for stencil design.

MECHANICAL DATA

NS (R-PDSO-G)** **PLASTIC SMALL-OUTLINE PACKAGE**

14-PINS SHOWN

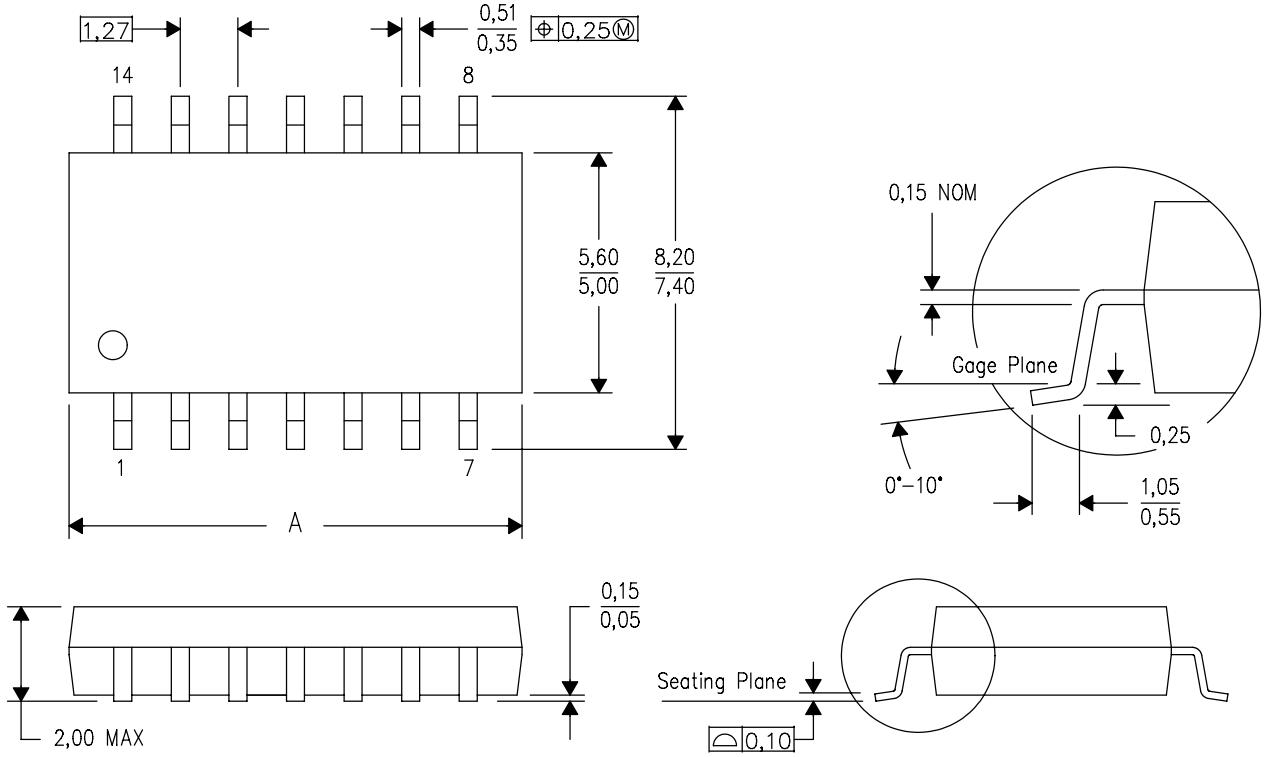

DIM \ PINS **	14	16	20	24
A MAX	10,50	10,50	12,90	15,30
A MIN	9,90	9,90	12,30	14,70

4040062/C 03/03

NOTES:
A. All linear dimensions are in millimeters.
B. This drawing is subject to change without notice.
C. Body dimensions do not include mold flash or protrusion, not to exceed 0,15.

J 14 CDIP - 5.08 mm max height

CERAMIC DUAL IN LINE PACKAGE

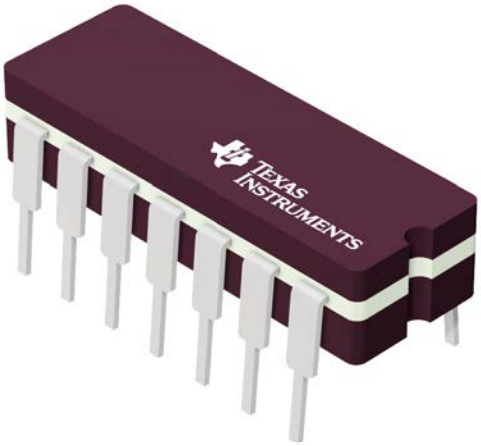

Images above are just a representation of the package family, actual package may vary.
Refer to the product data sheet for package details.

4040083-5/G

PACKAGE OUTLINE

J0014A

CDIP - 5.08 mm max height

CERAMIC DUAL IN LINE PACKAGE

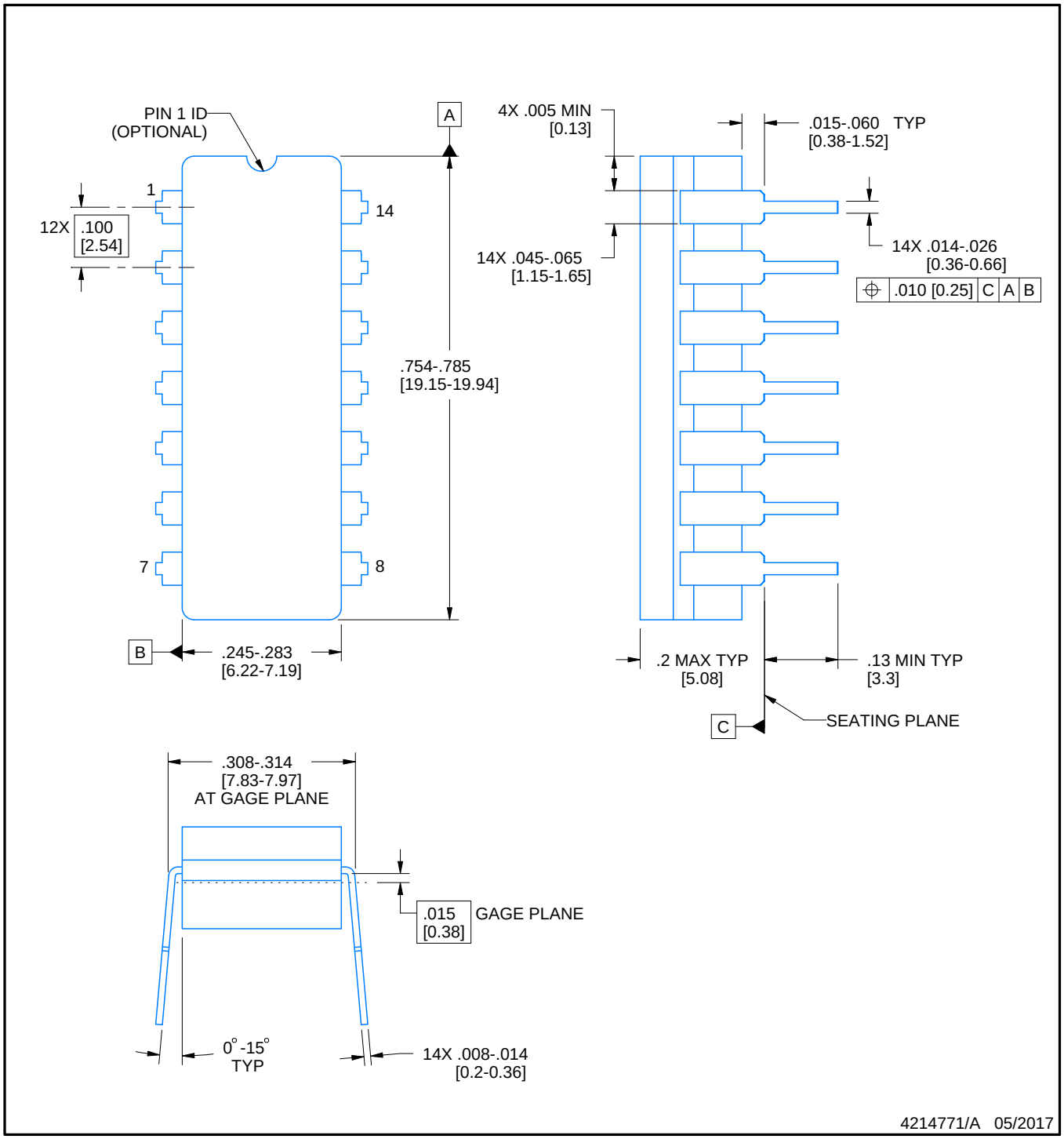

NOTES:

1. All controlling linear dimensions are in inches. Dimensions in brackets are in millimeters. Any dimension in brackets or parenthesis are for reference only. Dimensioning and tolerancing per ASME Y14.5M.
2. This drawing is subject to change without notice.
3. This package is hermitically sealed with a ceramic lid using glass frit.
4. Index point is provided on cap for terminal identification only and on press ceramic glass frit seal only.
5. Falls within MIL-STD-1835 and GDIP1-T14.

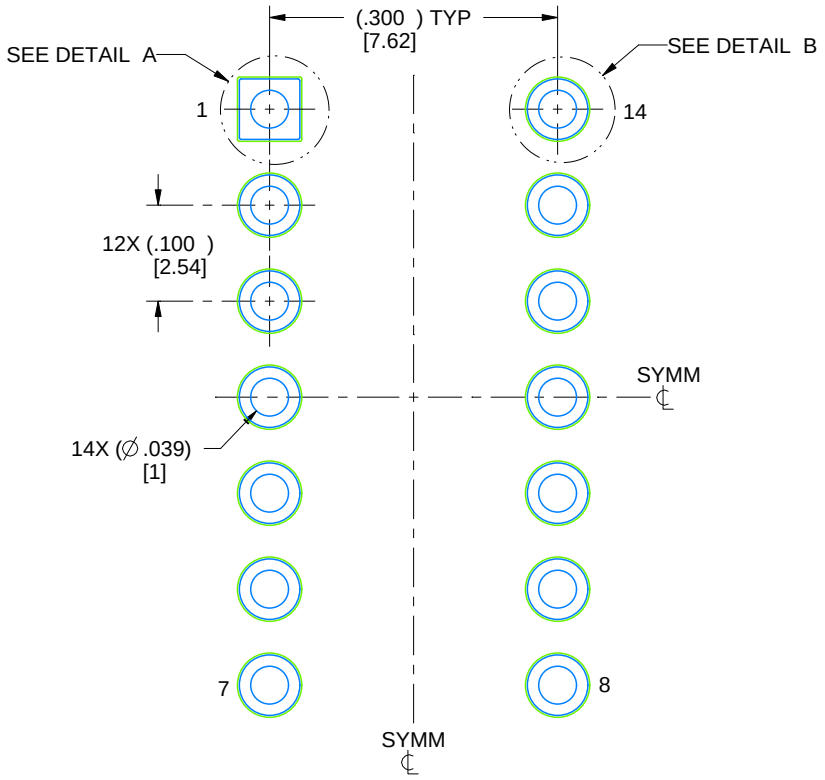

LAND PATTERN EXAMPLE
NON-SOLDER MASK DEFINED
SCALE: 5X

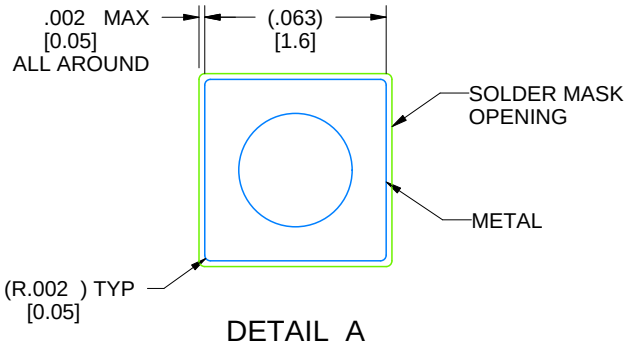

DETAIL A
SCALE: 15X

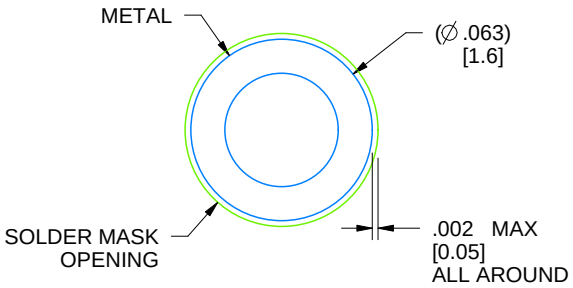

DETAIL B
13X, SCALE: 15X

4214771/A 05/2017

N (R–PDIP–T**) PLASTIC DUAL–IN–LINE PACKAGE

16 PINS SHOWN

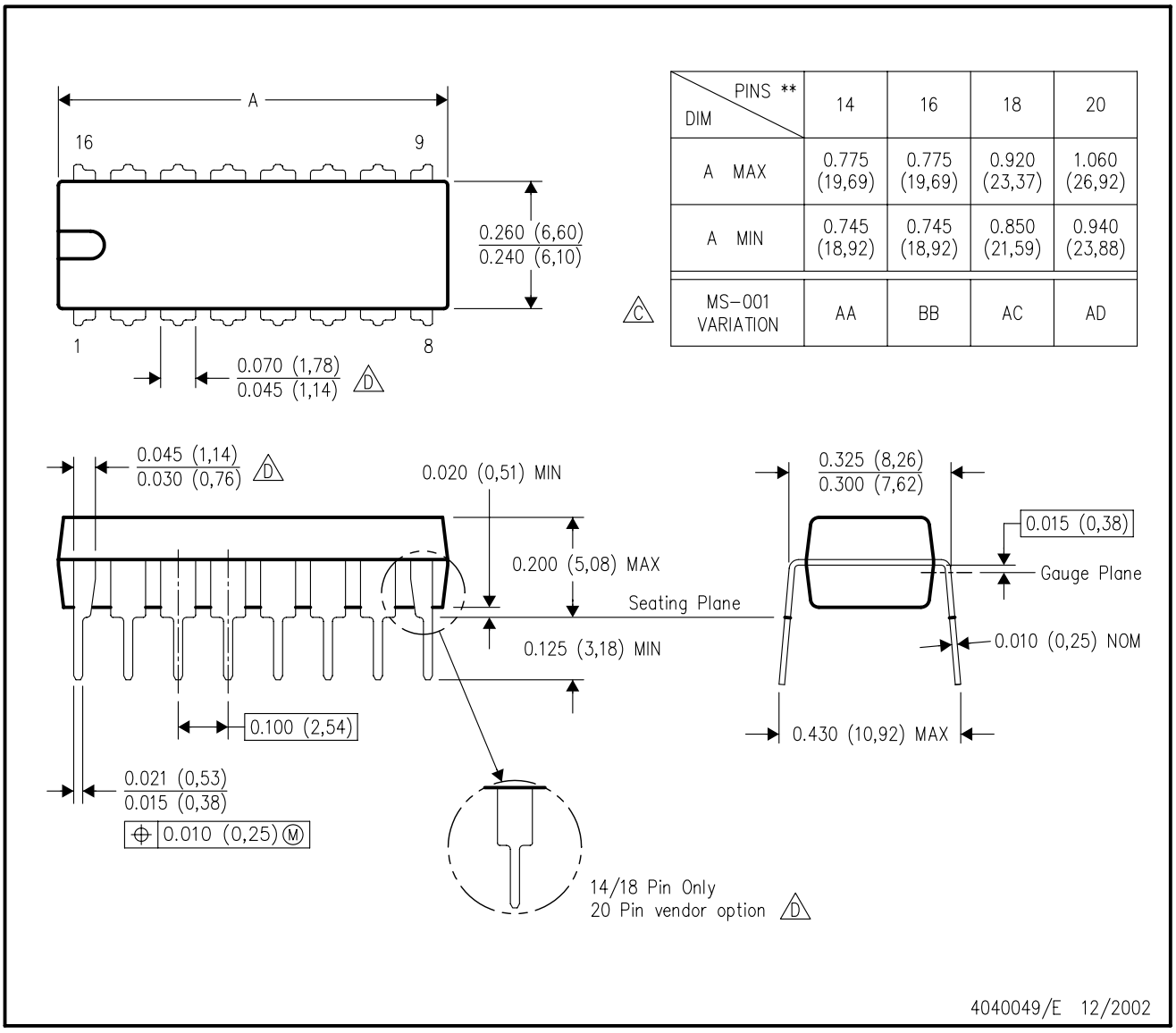

DIM \ PINS **	14	16	18	20
A MAX	0.775 (19,69)	0.775 (19,69)	0.920 (23,37)	1.060 (26,92)
A MIN	0.745 (18,92)	0.745 (18,92)	0.850 (21,59)	0.940 (23,88)
MS–001 VARIATION (C)	AA	BB	AC	AD

NOTES:
A. All linear dimensions are in inches (millimeters).
B. This drawing is subject to change without notice.
C. Falls within JEDEC MS–001, except 18 and 20 pin minimum body length (Dim A).
D. The 20 pin end lead shoulder width is a vendor option, either half or full width.

PW0014A

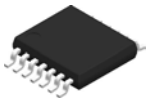

PACKAGE OUTLINE

TSSOP - 1.2 mm max height

SMALL OUTLINE PACKAGE

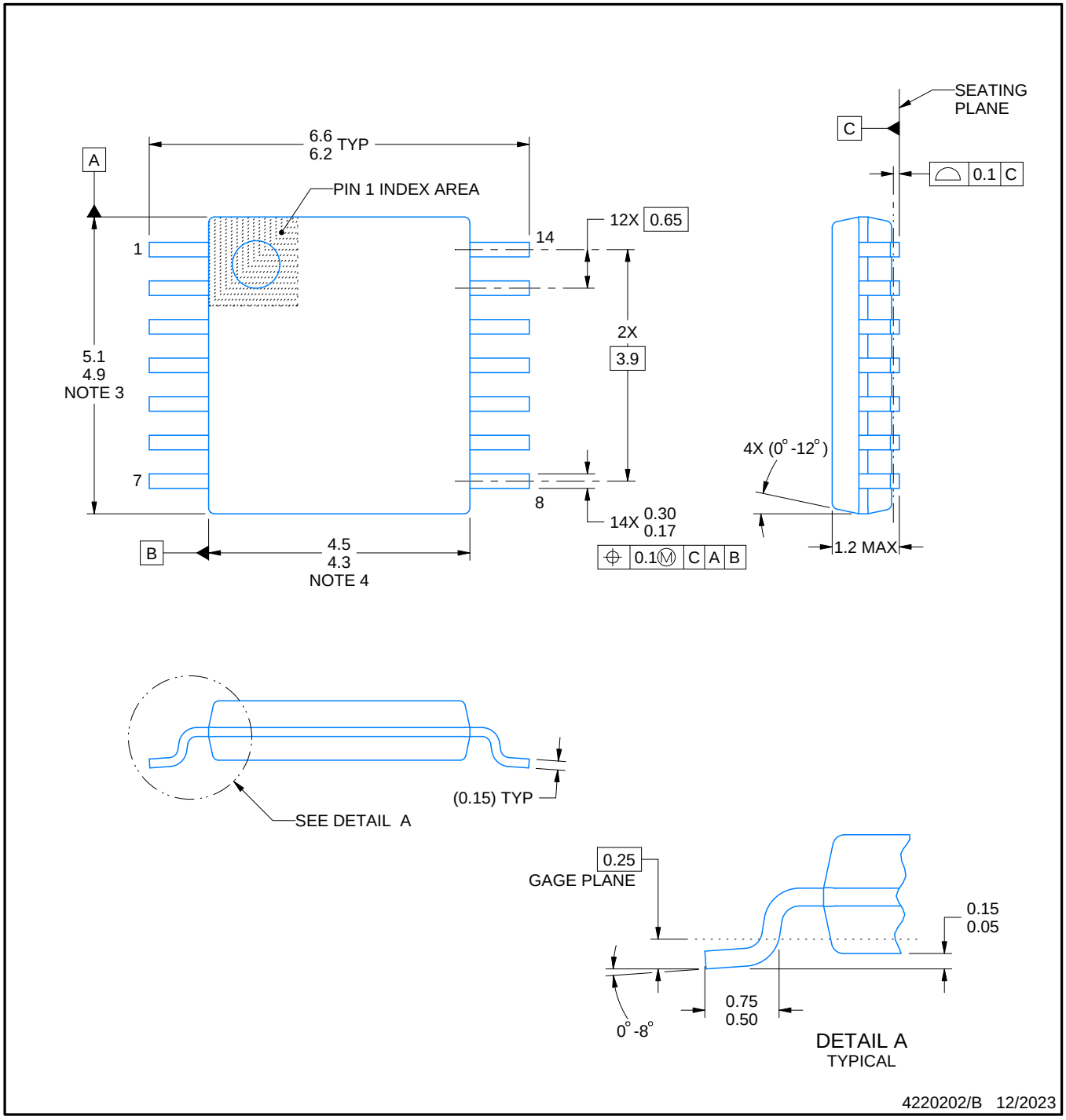

NOTES:

1. All linear dimensions are in millimeters. Any dimensions in parenthesis are for reference only. Dimensioning and tolerancing per ASME Y14.5M.
2. This drawing is subject to change without notice.
3. This dimension does not include mold flash, protrusions, or gate burrs. Mold flash, protrusions, or gate burrs shall not exceed 0.15 mm per side.
4. This dimension does not include interlead flash. Interlead flash shall not exceed 0.25 mm per side.
5. Reference JEDEC registration MO-153.

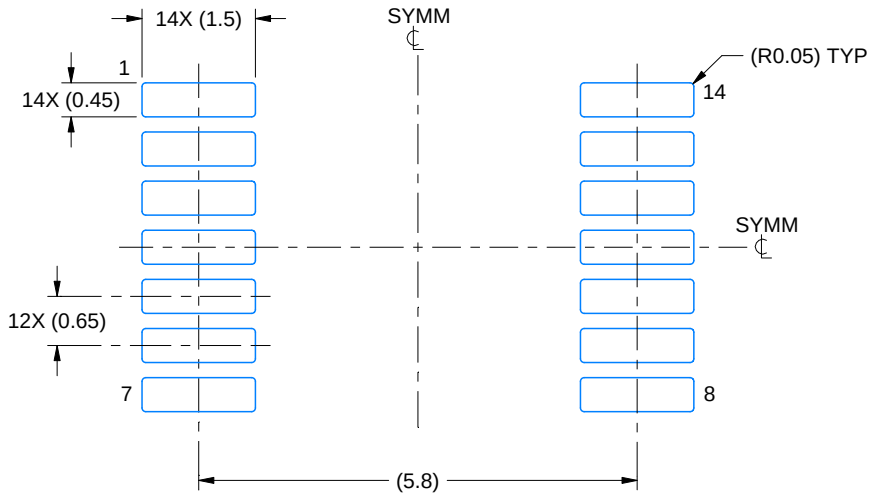

LAND PATTERN EXAMPLE
EXPOSED METAL SHOWN
SCALE: 10X

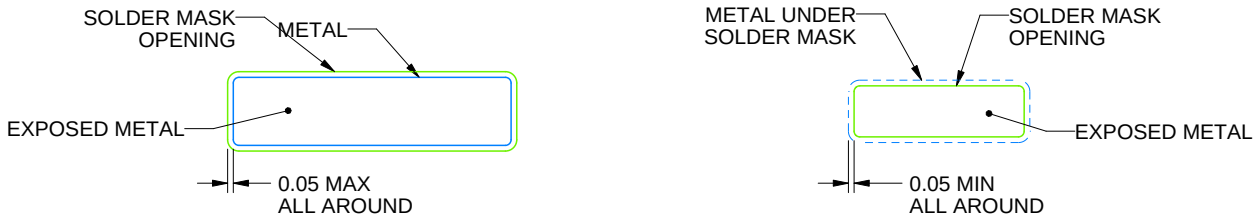

NON-SOLDER MASK DEFINED (PREFERRED)

SOLDER MASK DEFINED

SOLDER MASK DETAILS

4220202/B 12/2023

NOTES: (continued)

6. Publication IPC-7351 may have alternate designs.
7. Solder mask tolerances between and around signal pads can vary based on board fabrication site.

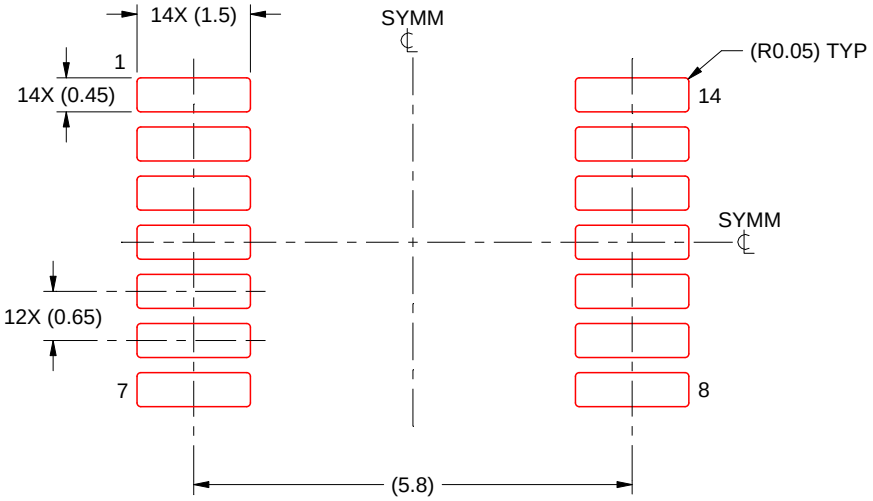

SOLDER PASTE EXAMPLE
BASED ON 0.125 mm THICK STENCIL
SCALE: 10X

4220202/B 12/2023

NOTES: (continued)

8. Laser cutting apertures with trapezoidal walls and rounded corners may offer better paste release. IPC-7525 may have alternate design recommendations.
9. Board assembly site may have different recommendations for stencil design.

IMPORTANT NOTICE AND DISCLAIMER

TI PROVIDES TECHNICAL AND RELIABILITY DATA (INCLUDING DATA SHEETS), DESIGN RESOURCES (INCLUDING REFERENCE DESIGNS), APPLICATION OR OTHER DESIGN ADVICE, WEB TOOLS, SAFETY INFORMATION, AND OTHER RESOURCES “AS IS” AND WITH ALL FAULTS, AND DISCLAIMS ALL WARRANTIES, EXPRESS AND IMPLIED, INCLUDING WITHOUT LIMITATION ANY IMPLIED WARRANTIES OF MERCHANTABILITY, FITNESS FOR A PARTICULAR PURPOSE OR NON-INFRINGEMENT OF THIRD PARTY INTELLECTUAL PROPERTY RIGHTS.

These resources are intended for skilled developers designing with TI products. You are solely responsible for (1) selecting the appropriate TI products for your application, (2) designing, validating and testing your application, and (3) ensuring your application meets applicable standards, and any other safety, security, regulatory or other requirements.

These resources are subject to change without notice. TI grants you permission to use these resources only for development of an application that uses the TI products described in the resource. Other reproduction and display of these resources is prohibited. No license is granted to any other TI intellectual property right or to any third party intellectual property right. TI disclaims responsibility for, and you will fully indemnify TI and its representatives against, any claims, damages, costs, losses, and liabilities arising out of your use of these resources.

TI’s products are provided subject to TI’s Terms of Sale or other applicable terms available either on ti.com or provided in conjunction with such TI products. TI’s provision of these resources does not expand or otherwise alter TI’s applicable warranties or warranty disclaimers for TI products.

TI objects to and rejects any additional or different terms you may have proposed.

Mailing Address: Texas Instruments, Post Office Box 655303, Dallas, Texas 75265
Copyright © 2025, Texas Instruments Incorporated