BQ40Z80 2-6 节锂离子电池组管理器

1 特性

- 完全集成的 2-6 节锂离子或锂聚合物电池组管理器和保护功能
- 获得专利的新一代 Impedance Track® 技术可准确测量锂离子和锂聚合物电池中的可用电量
- 具有可配置的多功能引脚，支持多种应用
- 支持椭圆曲线加密 (ECC) 或 SHA-1 认证
- 高侧 N 沟道保护 FET 驱动器
- 充电或者静止状态时具有集成的电池平衡功能
- 原生支持 29Ah 的电池，扩展后还可支持更大的电池容量
- 全面的可编程保护功能
  - 电压
  - 电流
  - 温度
  - 充电终止时间
  - CHG/DSG FET
  - 模拟前端 (AFE)
- 精密的充电算法
  - JEITA
  - 增强型充电
  - 自适应充电
  - 电池均衡
- 支持 TURBO 模式 2.0/Intel® 动态电池功率技术 (DBPTv2)
- 诊断使用寿命数据监控器和黑盒记录器
- LED 显示屏
- 支持双线制 SMBus v1.1 接口
- IATA 支持
- 紧凑型封装：32 引线 QFN (RSM)

2 应用

- 工业器械和机器人
- 手持式园艺和电动工具
- 电池供电型吸尘器
- 能源存储系统和 UPS

3 说明

BQ40Z80 器件采用已获专利的 Impedance Track™ 技术，是一个全集成、单芯片、基于电池组的解决方案，可为 2-6 节串联锂离子和锂聚合物电池组提供电量监测、保护和认证等各种特性。

BQ40Z80 器件利用其集成的高性能模拟外设，测量锂离子或锂聚合物电池的可用容量、电压、电流、温度和其他关键参数，保留准确的数据记录，并通过 SMBus v1.1 兼容接口将这些信息报告给系统主机控制器。

椭圆曲线加密 (ECC) 或 SHA-1 认证具有用于认证密钥的安全存储器，可确保识别真正的电池组。

BQ40Z80 器件为主机系统提供可用的最大功率和最大电流，从而支持涡轮模式 2.0/Intel 动态电池功率技术 (DBPTv2)。该器件有八个多功能引脚，可配置为热输入、ADC 输入、通用输入/输出 (GPIO) 引脚、Presence 引脚、LED 功能、显示按钮输入或其他功能。状态和标志寄存器可映射到 GPIO，并用作主机处理器的中断。

器件信息

器件型号	封装	封装尺寸（标称值）
BQ40Z80	VQFN (32)	4.00mm × 4.00mm

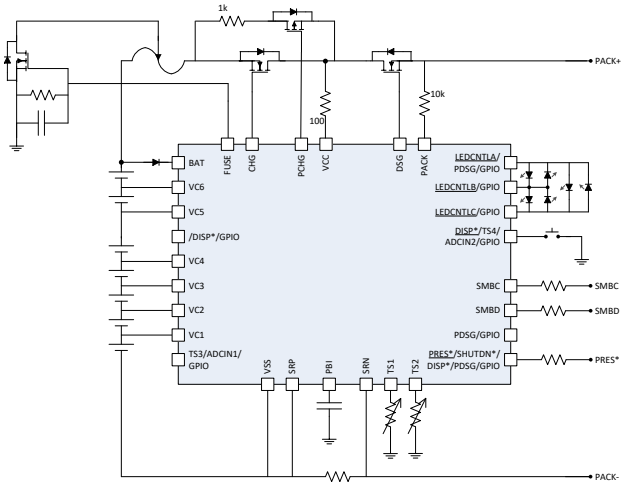

简化版原理图

本文档旨在为方便起见，提供有关 TI 产品中文版本的信息，以确认产品的概要。有关适用的官方英文版本的最新信息，请访问 www.ti.com，其内容始终优先。TI 不保证翻译的准确性和有效性。在实际设计之前，请务必参考最新版本的英文版本。

Table of Contents

1 特性.....1
2 应用.....1
3 说明.....1
4 Revision History.....2
5 说明（续）.....3
6 Pin Configuration and Functions.....3
Pin Functions.....3
7 Specifications.....8
7.1 Absolute Maximum Ratings.....8
7.2 ESD Ratings.....8
7.3 Recommended Operating Conditions.....8
7.4 Thermal Information.....9
7.5 Electrical Characteristics.....9
7.6 Typical Characteristics.....18
8 Detailed Description.....20
8.1 Overview.....20
8.2 Functional Block Diagram.....20
8.3 Feature Description.....21
8.4 Device Functional Modes.....25
9 Applications and Implementation.....26
9.1 Application Information.....26
9.2 Typical Applications.....26
10 Power Supply Recommendations.....31
11 Layout.....32
11.1 Layout Guidelines.....32
11.2 Layout Examples.....34
12 Device and Documentation Support.....38
12.1 Documentation Support.....38
12.2 Receiving Notification of Documentation Updates.....38
12.3 支持资源.....38
12.4 Trademarks.....38
12.5 静电放电警告.....38
12.6 术语表.....38
13 Mechanical, Packaging, and Orderable Information.....38

4 Revision History

注：以前版本的页码可能与当前版本的页码不同

Changes from Revision A (June 2018) to Revision B (September 2020)	Page
• 删除了数据表中的 7 节串联器件选项	1
• Deleted VC7 I/O details	3
• Changed high-voltage GPIO default from 7-series cell option to GPIO	9
• Deleted 7-series cell option and BQ40Z80 multifunction pin combinations	22
• Changed the 7-series EVM schematic for the 6-series EVM schematic	26
• Updated the layout examples	34

Copyright © 2021 Texas Instruments Incorporated

5 说明（续）

BQ40Z80 器件可针对过压、欠压、过流、短路电流、过载和过热条件以及其他与电池组和电池相关的故障，提供基于软件的第 1 级和第 2 级安全保护功能。这个紧凑的 32 导线 QFN 封装在尽可能地提供电池电量测量应用的功能性和安全性的同时，更大限度地降低解决方案成本和智能电池的尺寸。

6 Pin Configuration and Functions

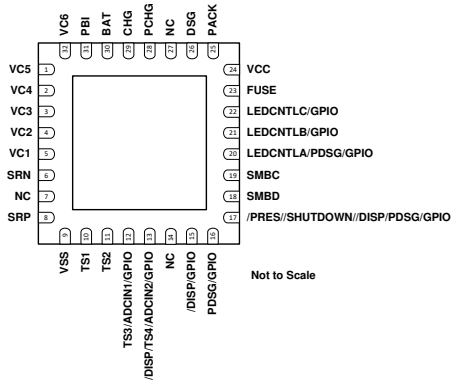

图 6-1. RSM Package 32-Pin VQFN with Exposed Thermal Pad Top View

Pin Functions

PIN		TYPE	DESCRIPTION
NAME	NUMBER		
VC5	1	AI[(1)]	Sense voltage input pin for the fifth cell from the bottom of the stack, balance current input for the fifth cell from the bottom of the stack, and return balance current for the sixth cell from the bottom of the stack. Should be connected to the positive terminal of the fifth cell from the bottom of stack with a 100-Ω series resistor and a 0.1-μF capacitor to VC4. If not used, connect to VC4.
VC4	2	AI	Sense voltage input pin for the fourth cell from the bottom of the stack, balance current input for the fourth cell from the bottom of the stack, and return balance current for the fifth cell from the bottom of the stack. Should be connected to the positive terminal of the fourth cell from the bottom of stack with a 100-Ω series resistor and a 0.1-μF capacitor to VC3. If not used, connect to VC3.
VC3	3	AI	Sense voltage input pin for the third cell from the bottom of the stack, balance current input for the third cell from the bottom of the stack, and return balance current for the fourth cell from the bottom of the stack. Should be connected to the positive terminal of the third cell from the bottom of stack with a 100-Ω series resistor and a 0.1-μF capacitor to VC2. If not used, connect to VC2.
VC2	4	AI	Sense voltage input pin for the second cell from the bottom of the stack, balance current input for the second cell from the bottom of the stack, and return balance current for the third cell from the bottom of the stack. Should be connected to the positive terminal of the second cell from the bottom of stack with a 100-Ω series resistor and a 0.1-μF capacitor to VC1. If not used, connect to VC1.
VC1	5	AI	Sense voltage input pin for the first cell from the bottom of the stack, balance current input for the first cell from the bottom of the stack, and return balance current for the second cell from the bottom of the stack. Should be connected to the positive terminal of the first cell from the bottom of stack with a 100-Ω series resistor and a 0.1-μF capacitor to VSS.
SRN	6	I	Analog input pin connected to the internal coulomb counter peripheral for integrating a small voltage between SRP and SRN, where SRP is the top of the sense resistor and charging current flows from SRP to SRN. Should be connected through an RC filter to the sense resistor terminal connected to PACK – (not CELL –).
NC	7	—	Not internally connected

PIN		TYPE	DESCRIPTION
NAME	NUMBER		
SRP	8	I	Analog input pin connected to the internal coulomb counter peripheral for integrating a small voltage between SRP and SRN, where SRP is the top of the sense resistor and charging current flows from SRP to SRN. Should be connected through an RC filter to the sense resistor positive terminal, which is connected to the least-positive cells negative terminal.
VSS	9	P	Device ground
TS1	10	AI	Temperature sensor 1 thermistor input pin. Connect to thermistor-1. If not used, connect directly to VSS and configure data flash accordingly.
TS2	11	AI	Temperature sensor 2 thermistor input pin. Connect to thermistor-2. If not used, connect directly to VSS and configure data flash accordingly.
TS3/ADCIN1/ GPIO	12	IO	Multifunction pin for TS3, ADCIN1, and GPIO. Can be configured in the control registers. If not used, connect directly to VSS and configure data flash accordingly. TS3: Temperature sensor 3 thermistor input pin. Connect to thermistor-3. ADCIN1: General-purpose ADCIN pin. Connect properly scaled input to this pin. GPIO: Customizable GPIO
$\overline{\text{DISP}}$/TS4/ADCIN2/GPIO	13	IO	Multifunction pin for the display button, temperature sensor input, ADC input, or GPIO. Can be configured in the control registers. If not used, connect directly to VSS and configure data flash accordingly. $\overline{\text{DISP}}$: Connect to the display button or LED. TS4: Temperature sensor 4 thermistor input pin. Connect to thermistor-4. ADCIN2: General-purpose ADCIN pin. Connect properly scaled input to this pin. GPIO: Customizable GPIO
NC	14	—	Not internally connected
$\overline{\text{DISP}}$/GPIO	15	I/OD	Multifunction pin for the display button, or GPIO. Can be configured in the control registers. If not used, connect directly to VSS and configure data flash accordingly. $\overline{\text{DISP}}$: Connect to the display button or LED. GPIO: Customizable GPIO
PDSG/GPIO	16	I/OD	Multifunction pin for pre-discharge FET control, or GPIO. Can be configured in the control registers. If not used, connect directly to VSS and configure data flash accordingly. PDSG: Connect to the N-CH FET to control PRE-DISCHARGE mode. GPIO: Customizable GPIO
$\overline{\text{PRES}}$/ $\overline{\text{SHUTDN}}$/ $\overline{\text{DISP}}$/ PDSG/GPIO	17	I/OD	Multifunction pin for host system present input, emergency system shutdown, LED button control, pre-discharge control, or GPIO. Can be configured in the control registers. If not used, connect directly to VSS and configure data flash accordingly. $\overline{\text{PRES}}$: Connect to host to detect system present input for a removable battery pack. Do not pullup this pin. $\overline{\text{SHUTDN}}$: Emergency shutdown input for an embedded battery pack $\overline{\text{DISP}}$: Connect to the display button or LED. PDSG: Connect to the N-CH FET to control PRE-DISCHARGE mode. GPIO: Customizable GPIO
SMBD	18	I/OD	SMBus data pin
SMBC	19	I/OD	SMBus clock pin
LEDCNTLA/PDSG/GPIO	20	O	Multifunction pin for LED display, pre-discharge, or GPIO. If not used, connect to VSS with a 20-kΩ resistor. LEDCNTLA: LED display segment that drives the external LEDs, depending on the firmware configuration. PDSG: Connect to the N-CH FET to control PRE-DISCHARGE mode. GPIO: Customizable GPIO
LEDCNTLB/GPIO	21	O	Multifunction pin for LED display or GPIO. If not used, connect to VSS with a 20-kΩ resistor. LEDCNTLB: LED display segment that drives the external LEDs, depending on the firmware configuration. GPIO: Customizable GPIO
LEDCNTLC/GPIO	22	O	Multifunction pin for LED display or GPIO. If not used, connect to VSS with a 20-kΩ resistor. LEDCNTLC: LED display segment that drives the external LEDs, depending on the firmware configuration GPIO: Customizable GPIO

Copyright © 2021 Texas Instruments Incorporated

PIN		TYPE	DESCRIPTION
NAME	NUMBER		
FUSE	23	O	Fuse drive output pin. Can be OR'ed together into the fuse N-CH FET gate drive with secondary protector. If not used, connect directly to VSS.
VCC	24	P	Secondary power supply input. Connect to the middle of protection FETs through the series resistor.
PACK	25	AI	Pack sense input pin. Connect through the series resistor to PACK+.
DSG	26	O	NMOS discharge FET drive output pin. Connect to the DSG FET gate.
NC	27	—	Not internally connected.
PCHG	28	O	PMOS precharge FET drive output pin. Connect to the PCHG FET gate if the precharge function is used. Leave floating if not used.
CHG	29	O	NMOS charge FET drive output pin. Connect to the CHG FET gate.
BAT	30	P	Primary power supply input pin. Connect through the diode and series resistor to the top of the cell stack.
PBI	31	P	Power supply backup input pin. Connect to the 2.2-µF capacitor to VSS.
VC6	32	AI	Sense voltage input pin for the sixth cell from the bottom of the stack, balance current input for the sixth cell from the bottom of the stack. Should be connected to the positive terminal of the sixth cell from the bottom of stack with 100-Ω series resistor and a 0.1-µF capacitor to VC5. If not used, connect to VC5.

(1) P = Power Connection, O = Digital Output, AI = Analog Input, I = Digital Input, I/OD = Digital Input/Output

Copyright © 2021 Texas Instruments Incorporated

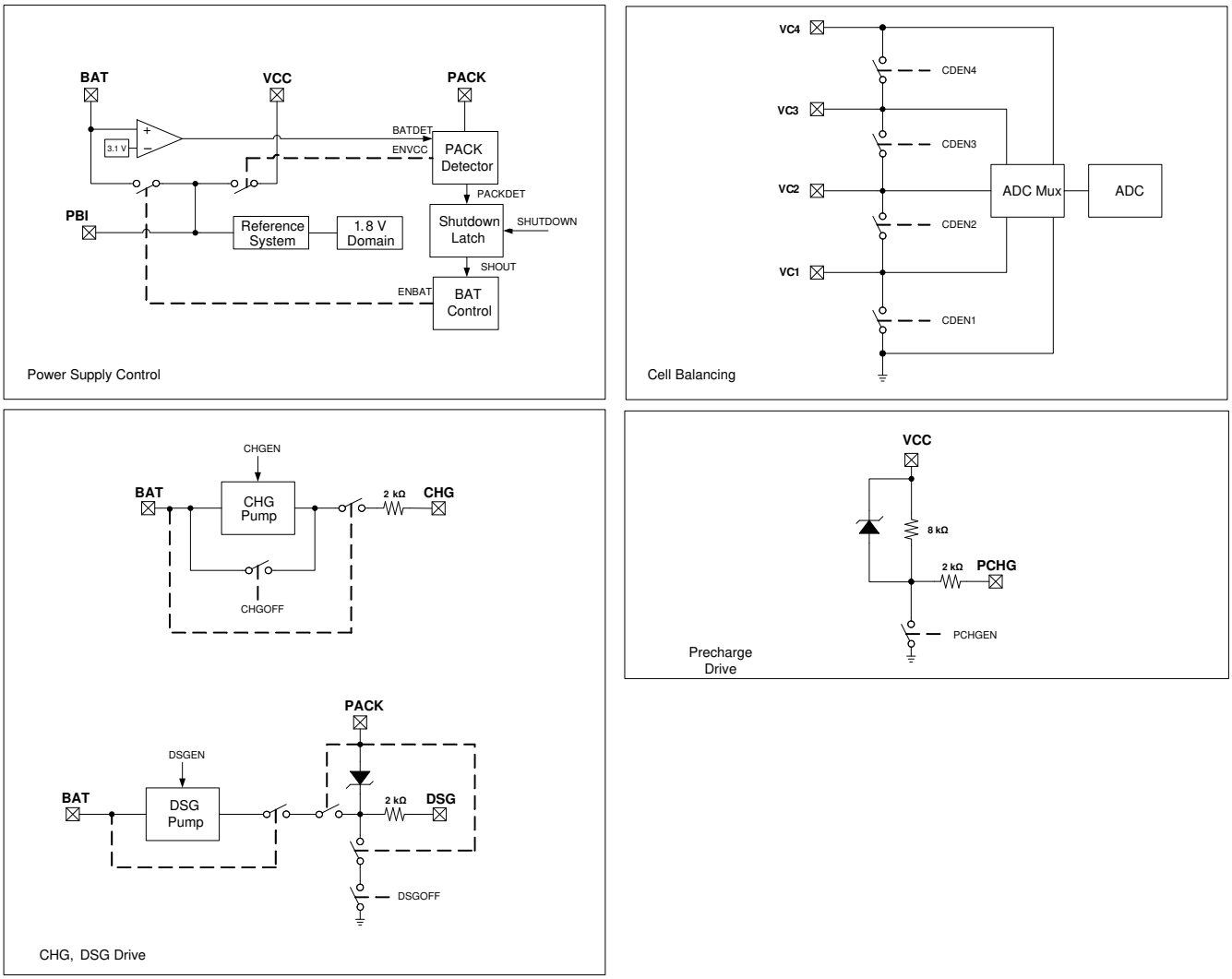

图 6-2. Pin Equivalent Diagram 1

Copyright © 2021 Texas Instruments Incorporated

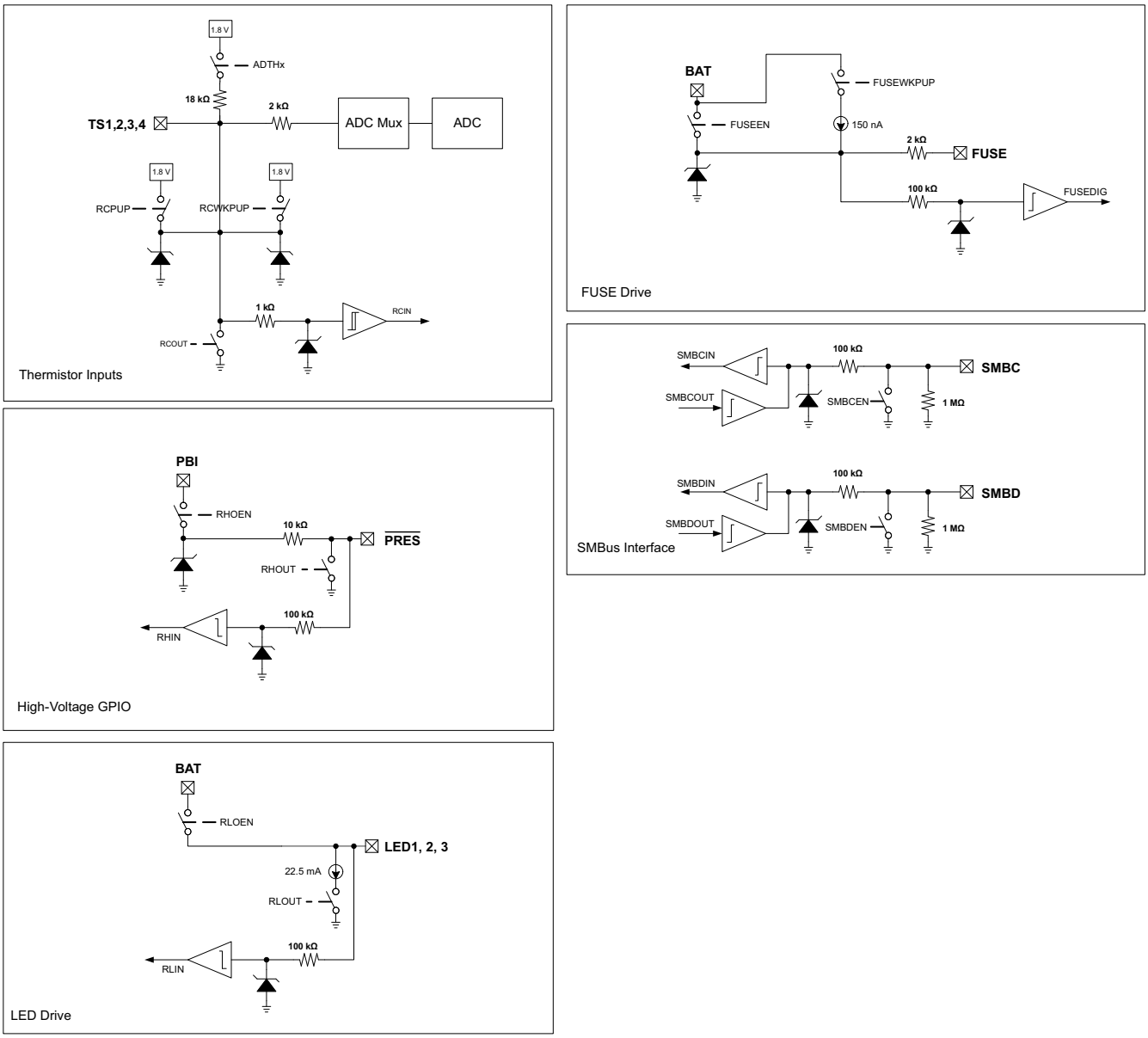

图 6-3. Pin Equivalent Diagram 2

7 Specifications

7.1 Absolute Maximum Ratings

Over-operating free-air temperature range (unless otherwise noted)[1]

		MIN	MAX	UNIT
Supply voltage range, V_{CC}	BAT[2], VCC[2], PBI[2], PACK[2]	–0.3	35	V
Input voltage range, V_{IN}	SMBC, SMBD, $\overline{DISP}$/GPIO, PDSG/GPIO, $\overline{PRES}$/ $\overline{SHUTDN}$/ $\overline{DISP}$/ PDSG/GPIO[2]	–0.3	35	V
	TS1, TS2, TS3/ADCIN1/GPIO, $\overline{DISP}$/TS4/ADCIN2/GPIO	–0.3	V_{REG} + 0.3	V
	LEDCNTLA/PDSG/GPIO, LEDCNTLB/GPIO, LEDCNTLC/GPIO[2]	–0.3	V_{BAT} + 0.3	V
	SRP, SRN	–0.3	V_{REG} + 0.3	V
	VC6	VC5 – 0.3	VSS + 35	V
	VC5	VC4 – 0.3	VSS + 35	V
	VC4	VC3 – 0.3	VSS + 35	V
	VC3	VC2 – 0.3	VSS + 35	V
	VC2	VC1 – 0.3	VSS + 35	V
	VC1	VSS – 0.3	VSS + 35	V
Output voltage range, V_O	CHG, DSG[2]	–0.3	43	
	PCHG, FUSE	–0.3	35	V
Maximum VSS current, I_{SS}			50	mA
Functional temperature T_{FUNC}		–40	110	
Storage temperature, T_{STG}		–65	150	°C
Lead temperature (soldering, 10 s), T_{SOLDER}			300	°C

(1) Stresses beyond those listed under *absolute maximum ratings* may cause permanent damage to the device. These are stress ratings only, and functional operation of the device at these or any other conditions beyond those indicated under *recommended operating conditions* is not implied. Exposure to absolute – maximum – rated conditions for extended periods may affect device reliability.
(2) A series 50-Ω or larger resistor is needed when voltage is applied beyond 28 V.

7.2 ESD Ratings

			VALUE	UNIT
$V_{(ESD)}$	Electrostatic discharge	Human-body model (HBM), per ANSI/ESDA/JEDEC JS-001[1]	±2000	V
		Charged-device model (CDM), per JEDEC specification JESD22-C101[2]	±500	

(1) JEDEC document JEP155 states that 500-V HBM allows safe manufacturing with a standard ESD control process.
(2) JEDEC document JEP157 states that 250-V CDM allows safe manufacturing with a standard ESD control process.

7.3 Recommended Operating Conditions

Typical values stated where T_A = 25°C and VCC = 25.2 V, Min/Max values stated where T_A = –40°C to 85°C and VCC = 2.2 V to 32 V (unless otherwise noted)

			MIN	NOM	MAX	UNIT
V_{CC}	Supply voltage	BAT[1], VCC[1], PBI[1], PACK[1]	2.2		32	V
$V_{SHUTDOWN-}$	Shutdown voltage	$V_{PACK} < V_{SHUTDOWN-}$	1.8	2.0	2.2	V
$V_{SHUTDOWN+}$	Start-up voltage	$V_{PACK} > V_{SHUTDOWN-} + V_{HYS}$	2.05	2.25	2.45	V
V_{HYS}	Shutdown voltage hysteresis	$V_{SHUTDOWN+} - V_{SHUTDOWN-}$		250		mV

Copyright © 2021 Texas Instruments Incorporated

Typical values stated where T_A = 25°C and VCC = 25.2 V, Min/Max values stated where T_A = –40°C to 85°C and VCC = 2.2 V to 32 V (unless otherwise noted)

			MIN	NOM	MAX	UNIT
V_{IN}	Input voltage range	SMBC, SMBD, $\overline{DISP}$/GPIO, PDSG/GPIO, $\overline{PRES}$/$\overline{SHUTDN}$/, $\overline{DISP}$/PDSG/GPIO(1)			32	V
		TS1, TS2, TS3/ADCIN1/GPIO, $\overline{DISP}$/TS4/ADCIN2/GPIO			V_{REG}	
		LEDCNTLA/PDSG/GPIO, LEDCNTLB/GPIO, LEDCNTLC/GPIO(1)			V_{BAT}	
		SRP, SRN	–0.2		0.2	
		VC6	V_{VC5}		VC5 + 5	
		VC5	V_{VC4}		VC4 + 5	
		VC4	V_{VC3}		VC3 + 5	
		VC3	V_{VC2}		VC2 + 5	
		VC2	V_{VC1}		VC1 + 5	
		VC1	V_{VSS}		VSS + 5	
V_O	Output voltage range	PCHG, FUSE(1)			32	V
C_{PBI}	External PBI capacitor		2.2			µF
T_{OPR}	Operating temperature		–40		85	°C

(1) A series 50-Ω or larger resistor is needed when voltage is applied beyond 28 V.

7.4 Thermal Information

THERMAL METRIC(1)		BQ40Z80 RSM (QFN) 32 PINS	UNIT
$R_{\theta JA, High K}$	Junction-to-ambient thermal resistance	47.4	°C/W
$R_{\theta JC(top)}$	Junction-to-case(top) thermal resistance	40.3	°C/W
$R_{\theta JB}$	Junction-to-board thermal resistance	14.7	°C/W
ψ_{JT}	Junction-to-top characterization parameter	0.8	°C/W
ψ_{JB}	Junction-to-board characterization parameter	14.4	°C/W
$R_{\theta JC(bottom)}$	Junction-to-case(bottom) thermal resistance	3.8	°C/W

(1) For more information about traditional and new thermal metrics, see the *Semiconductor and IC Package Thermal Metrics* application report, SPRA953.

7.5 Electrical Characteristics

Typical values stated where T_A = 25°C and VCC = 21.6 V, Min/Max values stated where T_A = –40°C to 85°C and VCC = 2.2 V to 32 V unless otherwise noted

PARAMETER		CONDITIONS	MIN	TYP	MAX	UNIT
Supply Currents						
I_{NORMAL}	NORMAL mode	CPU not active, CHG on. DSG on, High Frequency Oscillator on, Low Frequency Oscillator on, REG18 on, ADC on, ADC_Filter on, CC_Filter on, CC on, LED/Buttons/GPIOs off, SMBus not active, no Flash write		663		µA

Typical values stated where T_A = 25°C and VCC = 21.6 V, Min/Max values stated where T_A = –40°C to 85°C and VCC = 2.2 V to 32 V unless otherwise noted

PARAMETER		CONDITIONS	MIN	TYP	MAX	UNIT
I_{SLEEP}	SLEEP mode	CPU not active, CHG on, DSG on, High Frequency Oscillator off, Low Frequency Oscillator on, REG18 on, ADC off, ADC_Filter off, CC_Filter off, LED/ Buttons/GPIOs off, SMBus not active, no Flash write		96		µA
		CPU not active, CHG off. DSG on, High Frequency Oscillator off, Low Frequency Oscillator on, REG18 on, ADC off, ADC_Filter off, CC_Filter off, LED/ Buttons/GPIOs off, SMBus not active, no Flash write, BAT = 14.4 V		90		µA
$I_{SHUTDOWN}$	SHUTDOWN mode	CPU not active, CHG off. DSG off, High Frequency Oscillator off, Low Frequency Oscillator off, REG18 off, ADC off, ADC_Filter off, CC_Filter off, LED/ Buttons/GPIOs off, SMBus not active, no Flash write, BAT = 14.4 V		1.4		µA
Power Supply Control						
$V_{SWITCHOVER-}$	BAT to VCC switchover voltage	$V_{BAT} < V_{SWITCHOVER-}$	1.95	2.1	2.2	V
$V_{SWITCHOVER+}$	VCC to BAT switchover voltage	$V_{BAT} > V_{SWITCHOVER-} + V_{HYS}$	2.9	3.1	3.25	V
V_{HYS}	Switchover voltage hysteresis	$V_{SWITCHOVER+} - V_{SWITCHOVER-}$		1000		mV
I_{LKG}	Input Leakage Current	BAT pin, BAT = 0 V, VCC = 32 V, PACK = 32 V			1	µA
		PACK pin, BAT = 32 V, VCC = 0 V, PACK = 0 V			1	
		BAT and PACK terminals, BAT = 0 V, VCC = 0 V, PACK = 0 V, PBI = 32 V			1	
R_{PD}	Internal pulldown resistance	PACK	30	40	50	kΩ
AFE Power-On Reset						
V_{REGIT-}	Negative-going voltage input	V_{REG}	1.51	1.55	1.59	V
V_{HYS}	Power-on reset hysteresis	$V_{REGIT+} - V_{REGIT-}$	70	100	130	mV
t_{RST}	Power-on reset time		200	300	400	µs
AFE Watchdog Reset and Wake Timer						
t_{WDT}	AFE watchdog timeout	t_{WDT} = 500	372	500	628	ms
		t_{WDT} = 1000	744	1000	1256	ms
		t_{WDT} = 2000	1488	2000	2512	ms
		t_{WDT} = 4000	2976	4000	5024	ms
t_{WAKE}	AFE wake timer	t_{WAKE} = 250	186	250	314	ms
		t_{WAKE} = 500	372	500	628	ms
		t_{WAKE} = 1000	744	1000	1256	ms
		t_{WAKE} = 2000	1488	2000	2512	ms
t_{FETOFF}	FET off delay after reset	t_{FETOFF} = 512	409	512	614	ms
Internal 1.8-V LDO						
V_{REG}	Regulator voltage		1.6	1.8	2	V
$\Delta V_{O(TEMP)}$	Regulator output over temperature	$\Delta V_{REG} / \Delta T_A$, I_{REG} = 10 mA		±0.25%		
$\Delta V_{O(LINE)}$	Line regulation	$\Delta V_{REG} / \Delta V_{BAT}$, I_{BAT} = 10 mA	–0.6%		0.5%	
$\Delta V_{O(LOAD)}$	Load regulation	$\Delta V_{REG} / \Delta I_{REG}$, I_{REG} = 0 mA to 10 mA	–1.5%		1.5%	
I_{REG}	Regulator output current limit	$V_{REG} = 0.9 \times V_{REG(NOM)}$, $V_{IN} > 2.2$ V	20			mA

Copyright © 2021 Texas Instruments Incorporated

Typical values stated where T_A = 25°C and VCC = 21.6 V, Min/Max values stated where T_A = –40°C to 85°C and VCC = 2.2 V to 32 V unless otherwise noted

PARAMETER		CONDITIONS	MIN	TYP	MAX	UNIT
I_{SC}	Regulator short-circuit current limit	V_{REG} = 0 × $V_{REG(NOM)}$	25	40	55	mA
$PSRR_{REG}$	Power supply rejection ratio	ΔV_{BAT} / ΔV_{REG}, I_{REG} = 10 mA, V_{IN} > 2.5 V, f = 10 Hz		40		dB
V_{SLEW}	Slew rate enhancement voltage threshold	V_{REG}	1.58	1.65		V
Voltage Reference 1						
V_{REF1}	Internal reference voltage	T_A = 25°C, after trim	1.215	1.22	1.225	V
$V_{REF1(DRIFT)}$	Internal reference voltage drift	T_A = 0°C to 60°C, after trim		±50		PPM/°C
		T_A = –40°C to 85°C, after trim		±80		PPM/°C
Voltage Reference 2						
V_{REF2}	Internal reference voltage	T_A = 25°C, after trim	1.22	1.225	1.23	V
$V_{REF2(DRIFT)}$	Internal reference voltage drift	T_A = 0°C to 60°C, after trim		±50		PPM/°C
		T_A = –40°C to 85°C, after trim		±80		PPM/°C
VC1, VC2, VC3, VC4, VC5, VC6, BAT, PACK						
K	Scaling factor	VC1 – VSS, VC2 – VC1, VC3 – VC2, VC4 – VC3, VC5 – VC4, VC6 – VC5	0.198	0.2	0.202	–
		VC6 – VSS	0.032	0.0333	0.034	
		BAT – VSS, PACK – VSS	0.0275	0.0286	0.0295	
		V_{REF2}	0.49	0.5	0.51	
V_{IN}	Input voltage range	VC1 – VSS, VC2 – VC1, VC3 – VC2, VC4 – VC3, VC5 – VC4, VC6 – VC5	–0.2		5	V
		VC6 – VSS	–0.2		30	
		PACK – VSS	–0.2		32	
I_{LKG}	Input leakage current	VC1, VC2, VC3, VC4, VC5, VC6, cell balancing off, cell detach detection off, ADC multiplexer off			1	µA
Cell Balancing and Cell Detach Detection						
R_{CB}	Internal cell balance resistance	$R_{DS(ON)}$ for internal FET switch at 2 V < VDS < 4 V			200	Ω
I_{CD}	Internal cell detach check current	VCx > VSS + 0.8 V	30	50	70	µA
ADC						
V_{IN}	Input voltage range	Internal reference (V_{REF1})	–0.2		1	V
		External reference (V_{REG})	–0.2		0.8 × V_{REG}	
	Full scale range	V_{FS} = V_{REF1} or V_{REG}	–V_{FS}		V_{FS}	V
INL	Integral nonlinearity (1 LSB = $V_{REF1}/(10 \times 2^N)$ = 1.225/(10 × 2^{15}) = 37.41 µV)	16-bit, best fit, –0.1 V to 0.8 × V_{REF1}			±8.5	LSB
		16-bit, best fit, –0.2 V to –0.1 V			±13.1	
OE	Offset error	16-bit, post calibration, V_{FS} = V_{REF1}		±67	±157	µV
OED	Offset error drift	16-bit, post calibration, V_{FS} = V_{REF1}		0.6	3	µV/°C
GE	Gain error	16-bit, –0.1 V to 0.8 × V_{FS}		±0.2%	±0.8%	/FSR
GED	Gain error drift	16-bit, –0.1 V to 0.8 × V_{FS}			150	PPM/°C
EIR	Effective input resistance		8			MΩ
ADC Digital Filter						

Typical values stated where T_A = 25°C and VCC = 21.6 V, Min/Max values stated where T_A = –40°C to 85°C and VCC = 2.2 V to 32 V unless otherwise noted

PARAMETER		CONDITIONS	MIN	TYP	MAX	UNIT
t_{CONV}	Conversion time	ADCTL[SPEED1, SPEED0] = 0, 0		31.25		ms
		ADCTL[SPEED1, SPEED0] = 0, 1		15.63		
		ADCTL[SPEED1, SPEED0] = 1, 0		7.81		
		ADCTL[SPEED1, SPEED0] = 1, 1		1.95		
Res	Resolution	No missing codes, ADCTL[SPEED1, SPEED0] = 0, 0	16			Bits
Eff_Res	Effective Resolution	With sign, ADCTL[SPEED1, SPEED0] = 0, 0	14	15		Bits
		With sign, ADCTL[SPEED1, SPEED0] = 0, 1	13	14		
		With sign, ADCTL[SPEED1, SPEED0] = 1, 0	11	12		
		With sign, ADCTL[SPEED1, SPEED0] = 1, 1	9	10		
Current Wake Comparator						
V_{WAKE}	Wake voltage threshold	$V_{WAKE} = V_{SRP} - V_{SRN}$= ± 0.625 mV	±0.3	±0.625	±0.9	mV
		$V_{WAKE} = V_{SRP} - V_{SRN}$ = ± 1.25 mV	±0.6	±1.25	±1.8	
		$V_{WAKE} = V_{SRP} - V_{SRN}$ = ± 2.5 mV	±1.2	±2.5	±3.6	
		$V_{WAKE} = V_{SRP} - V_{SRN}$ = ± 5 mV	±2.4	±5.0	±7.2	
$V_{WAKE(DRIFT)}$	Temperature drift of V_{WAKE} accuracy			0.5%		/°C
t_{WAKE}	Time from application of current to wake interrupt			250	700	µs
$t_{WAKE(SU)}$	Wake comparator startup time			500	1000	µs
Coulomb Counter						
V_{INPUT}	Input voltage range		–0.1		0.1	V
V_{RANGE}	Full scale range		–V_{REF1}/10		V_{REF1}/10	V
INL	Integral nonlinearity (1 LSB = $V_{REF1}/(10 \times 2^N)$ = $1.215/(10 \times 2^{15})$ = 3.71 µV)	16-bit, best fit over input voltage range		±5.2	±22.3	LSB
OE	Offset error	16-bit, post calibration		±5.0	±10	µV
OED	Offset error drift	15-bit + sign, post calibration		0.2	0.3	µV/°C
GE	Gain error	15-bit + sign, Over input voltage range		±0.2%	±0.8%	/FSR
GED	Gain error drift	15-bit + sign, Over input voltage range			150	PPM/°C
EIR	Effective input resistance		2.5			MΩ
t_{CONV}	Conversion Time	Single conversion		250		ms
Eff_Res	Effective Resolution	Single conversion	15			Bits
Current Protection Thresholds						
V_{OCD}	OCD detection threshold voltage range	$V_{OCD} = V_{SRP} - V_{SRN}$, PROTECTION_CONTROL[RSNS] = 1	–16.6		–100	mV
		$V_{OCD} = V_{SRP} - V_{SRN}$, PROTECTION_CONTROL[RSNS] = 0	–8.3		–50	mV
ΔV_{OCD}	OCD detection threshold voltage program step	$V_{OCD} = V_{SRP} - V_{SRN}$, PROTECTION_CONTROL[RSNS] = 1		–5.56		mV
		$V_{OCD} = V_{SRP} - V_{SRN}$, PROTECTION_CONTROL[RSNS] = 0		–2.78		mV

Copyright © 2021 Texas Instruments Incorporated

Typical values stated where T_A = 25°C and VCC = 21.6 V, Min/Max values stated where T_A = –40°C to 85°C and VCC = 2.2 V to 32 V unless otherwise noted

PARAMETER		CONDITIONS	MIN	TYP	MAX	UNIT
V_{SCC}	SCC detection threshold voltage range	$V_{SCC} = V_{SRP} - V_{SRN}$, PROTECTION_CONTROL[RSNS] = 1	44.4		200	mV
		$V_{SCC} = V_{SRP} - V_{SRN}$, PROTECTION_CONTROL[RSNS] = 0	22.2		100	mV
ΔV_{SCC}	SCC detection threshold voltage program step	$V_{SCC} = V_{SRP} - V_{SRN}$, PROTECTION_CONTROL[RSNS] = 1		22.2		mV
		$V_{SCC} = V_{SRP} - V_{SRN}$, PROTECTION_CONTROL[RSNS] = 0		11.1		mV
V_{SCD1}	SCD1 detection threshold voltage range	$V_{SCD1} = V_{SRP} - V_{SRN}$, PROTECTION_CONTROL[RSNS] = 1	–44.4		–200	mV
		$V_{SCD1} = V_{SRP} - V_{SRN}$, PROTECTION_CONTROL[RSNS] = 0	–22.2		–100	mV
ΔV_{SCD1}	SCD1 detection threshold voltage program step	$V_{SCD1} = V_{SRP} - V_{SRN}$, PROTECTION_CONTROL[RSNS] = 1		–22.2		mV
		$V_{SCD1} = V_{SRP} - V_{SRN}$, PROTECTION_CONTROL[RSNS] = 0		–11.1		mV
V_{SCD2}	SCD2 detection threshold voltage range	$V_{SCD2} = V_{SRP} - V_{SRN}$, PROTECTION_CONTROL[RSNS] = 1	–44.4		–200	mV
		$V_{SCD2} = V_{SRP} - V_{SRN}$, PROTECTION_CONTROL[RSNS] = 0	–22.2		–100	mV
ΔV_{SCD2}	SCD2 detection threshold voltage program step	$V_{SCD2} = V_{SRP} - V_{SRN}$, PROTECTION_CONTROL[RSNS] = 1		–22.2		mV
		$V_{SCD2} = V_{SRP} - V_{SRN}$, PROTECTION_CONTROL[RSNS] = 0		–11.1		mV
V_{OFFSET}	OCD, SCC, and SCDx offset error	Post-trim	–2.5		2.5	mV
V_{SCALE}	OCD, SCC, and SCDx scale error	No trim	–10%		10%	
		Post-trim	–5%		5%	
Current Protection Timing						
t_{OCD}	OCD detection delay time		1		31	ms
Δt_{OCD}	OCD detection delay time program step			2		ms
t_{SCC}	SCC detection delay time		0		915	µs
Δt_{SCC}	SCC detection delay time program step			61		µs
t_{SCD1}	SCD1 detection delay time	PROTECTION_CONTROL[SCDDx2] = 0	0		915	µs
		PROTECTION_CONTROL[SCDDx2] = 1	0		1850	µs
Δt_{SCD1}	SCD1 detection delay time program step	PROTECTION_CONTROL[SCDDx2] = 0		61		µs
		PROTECTION_CONTROL[SCDDx2] = 1		121		µs
t_{SCD2}	SCD2 detection delay time	PROTECTION_CONTROL[SCDDx2] = 0	0		458	µs
		PROTECTION_CONTROL[SCDDx2] = 1	0		915	µs
Δt_{SCD2}	SCD2 detection delay time program step	PROTECTION_CONTROL[SCDDx2] = 0		30.5		µs
		PROTECTION_CONTROL[SCDDx2] = 1		61		µs
t_{DETECT}	Current fault detect time	$V_{SRP} - V_{SRN} = V_T - 3$ mV for OCD, SCD1 and SCD2, $V_{SRP} - V_{SRN}$ = VT – 3 mV for SCC			160	µs
t_{ACC}	Current fault delay time accuracy	Max delay setting	–10%		10%	
Internal Temperature Sensor						

Typical values stated where T_A = 25°C and VCC = 21.6 V, Min/Max values stated where T_A = –40°C to 85°C and VCC = 2.2 V to 32 V unless otherwise noted

PARAMETER		CONDITIONS	MIN	TYP	MAX	UNIT
V_{TEMPT}	Internal temperature sensor voltage drift	V_{TEMPP}	–1.9		–2.1	mV/°C
		V_{TEMPP} – V_{TEMPN}, assured by design	0.177	0.178	0.179	mV/°C
NTC Thermistor Measurement Support (TS1, TS2, Pins 12 and 13 configured as TS3 and TS4)						
$R_{NTC(PU)}$	Internal pullup resistance	TS1	14.4	18	21.6	kΩ
		TS2	14.4	18	21.6	kΩ
		TS3	14.4	18	21.6	kΩ
		TS4	14.4	18	21.6	kΩ
$R_{NTC(DRIFT)}$			–360	–280	–200	PPM/°C
Low-Voltage General Purpose I/O (Multifunction Pins 12 and 13 configured as GPIO)						
V_{IH}	High-level input		0.65 × V_{REG}			V
V_{IL}	Low-level input				0.35 × V_{REG}	V
V_{OH}	Output voltage high	Output high, pullup enabled, I_{OH} = –1.0 mA	0.75 × V_{REG}			V
		Output high, pullup enabled, I_{OH} = –10 µA				
V_{OL}	Output voltage low	Output Low, I_{OL} = 1mA			0.2 × V_{REG}	V
C_{IN}	Input capacitance			5		pF
I_{LKG}	Input leakage current				1	µA
High-Voltage General Purpose I/O (multifunction pins 15, 16, 17 configured as GPIO, $\overline{PRES}$, $\overline{DISP}$, or $\overline{SHUTDN}$ Pin 15 configured as GPIO; Pin 16 configured as PDSG)						
V_{IH}	High-level input		1.3			V
V_{IL}	Low-level input				0.55	V
V_{OH}	Output voltage high	Output enabled, V_{BAT} > 5.5 V, I_{OH} = –0 µA	3.5			V
		Output enabled, V_{BAT} > 5.5 V, I_{OH} = –10 µA	1.8			
V_{OL}	Output voltage low	Output disabled, I_{OL} = 1.5 mA			0.4	V
C_{IN}	Input capacitance			5		pF
I_{LKG}	Input leakage current				3	µA
R_O	Output reverse resistance	Between GPIO, $\overline{PRES}$, $\overline{DISP}$, $\overline{SHUTDN}$, PDSG, and PBI	8			kΩ
General Purpose I/O with Constant Current Sink (Multifunction Pins 20, 21, 22 configured as LEDCNTLx)						
V_{IH}	High-level input	LEDCNTLx	1.45			V
V_{IL}	Low-level input	LEDCNTLx			0.55	V
V_{OH}	Output voltage high	LEDCNTLx, Output Enabled, V_{BAT} > 3.0 V, I_{OH} = –22.5 mA	V_{BAT} – 1.6			V
V_{OL}	Output voltage low	LEDCNTLx, Output Disabled, V_{BAT} > 3.0 V, I_{OH} = 3 mA			0.4	V
I_{SC}	High level output current protection	LEDCNTLx	–30	–45	–60	mA
I_{OL}	Low level output current	LEDCNTLx, V_{BAT} > 3.0 V, V_{OL} > 0.4 V	15.75	22.5	29.25	mA
$I_{LEDCNTLx}$	Current matching between outputs	LEDCNTLx, V_{BAT} = V_{LED} + 2.5 V		+/ – 1%		
C_{IN}	Input capacitance	LEDCNTLx		20		pF
I_{LKG}	Input leakage current	LEDCNTLx			1	µA
f_{LED}	Frequency of LED pattern	LEDCNTLx		124		Hz
$t_{SHUTDOWN}$	Thermal shutdown	LEDCNTLx, assured by design	120	135	150	°C
General Purpose I/O (Multifunction Pins 20, 21, 22 configured as GPIO) (Pin 20 configured as PDSG)						

Copyright © 2021 Texas Instruments Incorporated

Typical values stated where T_A = 25°C and VCC = 21.6 V, Min/Max values stated where T_A = –40°C to 85°C and VCC = 2.2 V to 32 V unless otherwise noted

PARAMETER		CONDITIONS	MIN	TYP	MAX	UNIT
V_{IH}	High-level input		1.45			V
V_{IL}	Low-level input				0.55	V
V_{OH}	Output voltage high	Output enabled, V_{BAT} > 3.0 V, I_{OH} = –22.5 mA	V_{BAT} – 1.6			V
		Output disabled, I_{OL} = 3 mA			0.4	V
I_{SC}	High level output current protection		–30	–45	–60	mA
I_{OL}	Low level output current	V_{BAT} > 3.0 V, V_{OL} > 0.4 V	15.75	22.5	29.25	mA
C_{IN}	Input capacitance			20		pF
I_{LKG}	Input leakage current				1	uA
SMBD, SMBC High Voltage I/O						
V_{IH}	Input voltage high	SMBC, SMBD, V_{REG} = 1.8 V	1.3			V
V_{IL}	Input voltage low	SMBC, SMBD, V_{REG} = 1.8 V			0.8	V
V_{OL}	Output low voltage	SMBC, SMBD, V_{REG} = 1.8 V, I_{OL} = 1.5 mA			0.4	V
C_{IN}	Input capacitance			5		pF
I_{LKG}	Input leakage current				1	µA
R_{PD}	Pulldown resistance		0.7	1	1.3	MΩ
SMBus						
f_{SMB}	SMBus operating frequency	SLAVE mode, SMBC 50% duty cycle	10		100	kHz
f_{MAS}	SMBus master clock frequency	MASTER mode, no clock low slave extend		51.2		kHz
t_{BUF}	Bus free time between start and stop		4.7			µs
$t_{HD(START)}$	Hold time after (repeated) start		4			µs
$t_{SU(START)}$	Repeated start setup time		4.7			µs
$t_{SU(STOP)}$	Stop setup time		4			µs
$t_{HD(DATA)}$	Data hold time		300			ns
$t_{SU(DATA)}$	Data setup time		250			ns
$t_{TIMEOUT}$	Error signal detect time		25		35	ms
t_{LOW}	Clock low period		4.7			µs
t_{HIGH}	Clock high period		4		50	µs
t_R	Clock rise time	10% to 90%			1000	ns
t_F	Clock fall time	90% to 10%			300	ns
$t_{LOW(SEXT)}$	Cumulative clock low slave extend time				25	ms
$t_{LOW(MEXT)}$	Cumulative clock low master extend time				10	ms
SMBus XL						
f_{SMBXL}	SMBus XL operating frequency	SLAVE mode, SMBC 50% duty cycle	40		400	kHz
t_{BUF}	Bus free time between start and stop		4.7			µs
$t_{HD(START)}$	Hold time after (repeated) start		4			µs
$t_{SU(START)}$	Repeated start setup time		4.7			µs
$t_{SU(STOP)}$	Stop setup time		4			µs

Copyright © 2021 Texas Instruments Incorporated

Typical values stated where T_A = 25°C and VCC = 21.6 V, Min/Max values stated where T_A = –40°C to 85°C and VCC = 2.2 V to 32 V unless otherwise noted

PARAMETER		CONDITIONS	MIN	TYP	MAX	UNIT
$t_{TIMEOUT}$	Error signal detect time		5		20	ms
t_{LOW}	Clock low period				20	µs
t_{HIGH}	Clock high period				20	µs
FUSE Drive (AFEFUSE)						
V_{OH}	Output voltage high	$V_{BAT} \geqslant 8$ V, C_L = 1 nF, $I_{AFEFUSE}$ = 0 µA	6	7	8.65	V
		$V_{BAT} < 8$ V, C_L = 1 nF, $I_{AFEFUSE}$ = 0 µA	V_{BAT} – 0.1		V_{BAT}	V
V_{IH}	High-level input		1.5	2	2.5	V
$I_{AFEFUSE(PU)}$	Internal pullup current	$V_{BAT} < 8$ V, $V_{AFEFUSE}$ = VSS		150	330	nA
$R_{AFEFUSE}$	Output impedance		2	2.6	3.2	kΩ
C_{IN}	Input capacitance			5		pF
t_{DELAY}	Fuse trim detection delay		128		256	µs
t_{RISE}	Fuse output rise time			5	20	µs
N-CH FET Drive (CHG, DSG)						
	Output voltage ratio	$Ratio_{DSG} = (V_{DSG} - V_{BAT}) / V_{BAT}$, 2.2 V < V_{BAT} < 4.92 V, 10 MΩ between PACK and DSG	2.133	2.333	2.45	– –
		$Ratio_{CHG} = (V_{CHG} - V_{BAT}) / V_{BAT}$, 2.2 V < V_{BAT} < 4.92 V, 10 MΩ between BAT and CHG	2.133	2.333	2.433	– –
V_{FETON}	Output voltage, CHG and DSG on	$V_{DSG(ON)} = (V_{DSG} - V_{BAT})$, $V_{BAT} \geqslant 4.92$ V (up to 32 V), 10 MΩ between PACK and DSG	10.5	11.5	12.5	V
		$V_{CHG(ON)} = (V_{CHG} - V_{BAT})$, $V_{BAT} \geqslant 4.92$ V (up to 32 V), 10 MΩ between BAT and CHG	10.5	11.5	12.5	V
V_{FETOFF}	Output voltage, CHG and DSG off	$V_{DSG(OFF)} = (V_{DSG} - V_{PACK})$, 10 MΩ between PACK and DSG	–0.4		0.4	V
		$V_{CHG(OFF)} = (V_{CHG} - V_{BAT})$, 10 MΩ between BAT and CHG	–0.4		0.4	V
t_R	Rise time	V_{DSG} from 0% to 35% $V_{DSG(ON)(TYP)}$, $V_{BAT} \geqslant 2.2$ V, C_L = 4.7 nF between DSG and PACK, 5.1 kΩ between DSG and C_L, 10 MΩ between PACK and DSG		200	500	µs
		V_{CHG} from 0% to 35% $V_{CHG(ON)(TYP)}$, $V_{BAT} \geqslant 2.2$ V, C_L = 4.7 nF between CHG and BAT, 5.1 kΩ between CHG and C_L, 10 MΩ between BAT and CHG		200	500	µs
t_F	Fall time	V_{DSG} from $V_{DSG(ON)(TYP)}$ to 1 V, $V_{BAT} \geqslant 2.2$ V, C_L = 4.7 nF between DSG and PACK, 5.1 kΩ between DSG and C_L, 10 MΩ between PACK and DSG		40	300	µs
		V_{CHG} from $V_{CHG(ON)(TYP)}$ to 1 V, $V_{BAT} \geqslant 2.2$ V, C_L = 4.7 nF between CHG and BAT, 5.1 kΩ between CHG and C_L, 10 MΩ between BAT and CHG		40	200	µs
P-CH FET Drive (PCHG)						
V_{FETON}	Output voltage, PCHG on	$V_{PCHG(ON)} = V_{CC} - V_{PCHG}$, 10 MΩ between VCC and CHG, $V_{BAT} \geqslant 8$ V	6	7	8	V
V_{FETOFF}	Output voltage, PCHG off	$V_{PCHG(OFF)} = V_{CC} - V_{PCHG}$, 10 MΩ between VCC and CHG	–0.4		0.4	V
t_R	Rise time	V_{PCHG} from 10% to 90% $V_{PCHG(ON)(TYP)}$, $V_{SS} \geqslant 8$ V, C_L = 4.7 nF between PCHG and VCC, 5.1 kΩ between PCHG and C_L, 10 MΩ between VCC and CHG		40	200	µs

Copyright © 2021 Texas Instruments Incorporated

Typical values stated where T_A = 25°C and VCC = 21.6 V, Min/Max values stated where T_A = –40°C to 85°C and VCC = 2.2 V to 32 V unless otherwise noted

PARAMETER		CONDITIONS	MIN	TYP	MAX	UNIT
t_F	Fall time	V_{PCHG} from 90% to 10% $V_{PCHG(ON)(TYP)}$, $V_{SS} \geqslant$ 8 V, C_L = 4.7 nF between PCHG and VCC, 5.1 kΩ between PCHG and C_L, 10 MΩ between VCC and CHG		40	200	µs
High-Frequency Oscillator						
f_{HFO}	Operating frequency			16.78		MHz
$f_{HFO(ERR)}$	Frequency error	T_A = –20°C to 70°C, includes frequency drift	–2.5%	±0.25%	2.5%	
		T_A = –40°C to 85°C, includes frequency drift	–3.5%	±0.25%	3.5%	
$t_{HFO(SU)}$	Start-up time	T_A = –20°C to 85°C, ***CLKCTL[HFRAMP]*** = 1, oscillator frequency within ±3% of nominal			4	ms
		T_A = –20°C to 85°C, ***CLKCTL[HFRAMP]*** = 0, oscillator frequency within ±3% of nominal			100	µs
Low-Frequency Oscillator						
f_{LFO}	Operating frequency			262.144		kHz
$f_{LFO(ERR)}$	Frequency error	T_A = –20°C to 70°C, includes frequency drift	–1.5%	±0.25%	1.5%	
		T_A = –40°C to 85°C, includes frequency drift	–2.5%	±0.25%	2.5%	
$t_{LFO(FAIL)}$	Failure detection frequency		30	80	100	kHz
Instruction Flash						
	Data retention		10			Years
	Flash programming write cycles		1000			Cycles
$t_{PROGWORD}$	Word programming time				40	µs
$t_{MASSERASE}$	Mass-erase time				40	ms
$t_{PAGEERASE}$	Page-erase time				40	ms
$t_{FLASHREAD}$	Flash-read current				2	mA
$t_{FLASHWRITE}$	Flash-write current				5	mA
$I_{FLASHERASE}$	Flash-erase current				15	mA
Data Flash						
	Data retention		10			Years
	Flash programming write cycles		20000			Cycles
$t_{PROGWORD}$	Word programming time				40	µs
$t_{MASSERASE}$	Mass-erase time				40	ms
$t_{PAGEERASE}$	Page-erase time				40	ms
$t_{FLASHREAD}$	Flash-read current				1	mA
$t_{FLASHWRITE}$	Flash-write current				5	mA
$I_{FLASHERASE}$	Flash-erase current				15	mA
ECC Authentication						
$I_{NORMAL+AUTH}$	NORMAL mode + Authentication	CPU active, CHG on. DSG on, High Frequency Oscillator on, Low Frequency Oscillator on, REG18 on, ADC on, ADC_Filter on, CC_Filter on, CC on, SMBus not active, Authentication Start		1350		µA
t_{SIGN}	EC-KCDSA signature signing time	3.8 V < VCC or BAT < 32 V		375		ms
	Number of Authentication operations		20000			Operations

7.6 Typical Characteristics

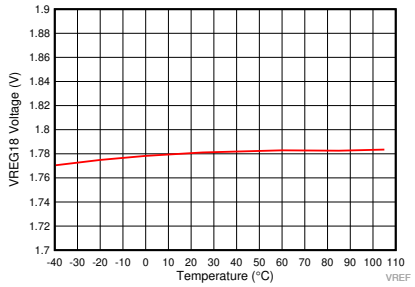

图 7-1. VREG 1.8-V Voltage vs. Temperature

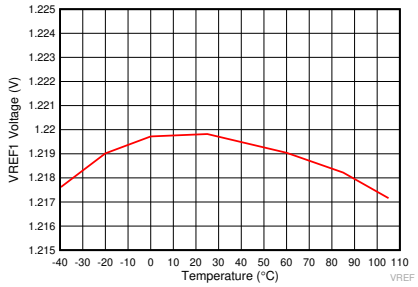

图 7-2. VREF 1 Voltage vs. Temperature

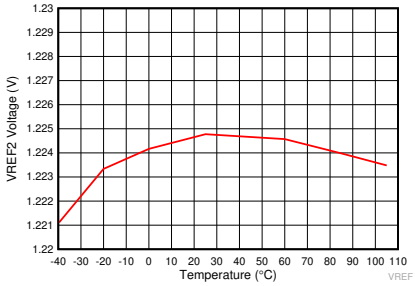

图 7-3. VREF 2 Voltage vs. Temperature

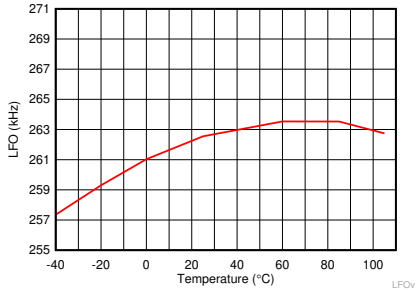

图 7-4. Low-Frequency Oscillator vs. Temperature

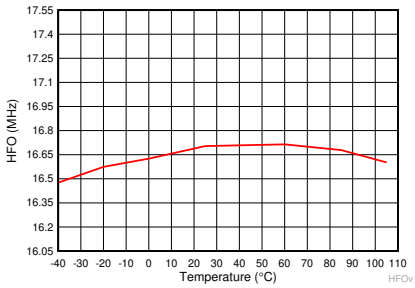

图 7-5. High-Frequency Oscillator vs. Temperature

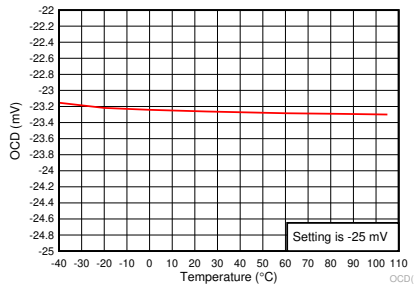

图 7-6. Overcurrent Discharge Protection Threshold vs. Temperature

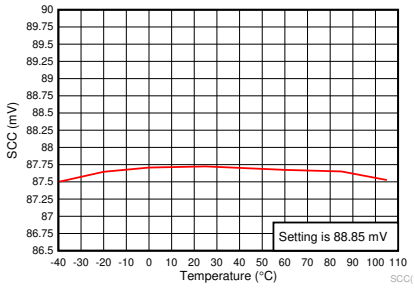

图 7-7. Short Circuit Charge Protection Threshold vs. Temperature

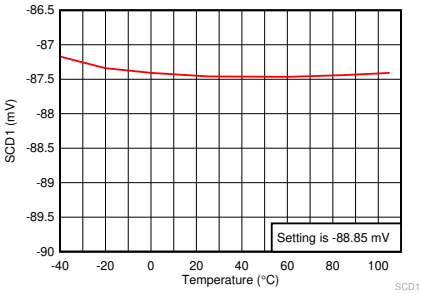

图 7-8. Short Circuit Discharge 1 Protection Threshold vs. Temperature

Copyright © 2021 Texas Instruments Incorporated

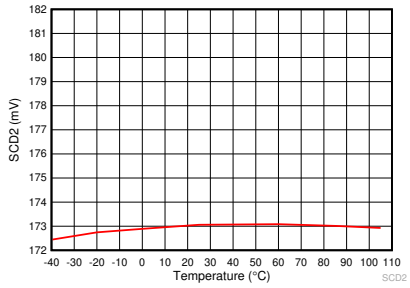

Threshold setting is – 177.7 mV.

图 7-9. Short Circuit Discharge 2 Protection Threshold vs. Temperature

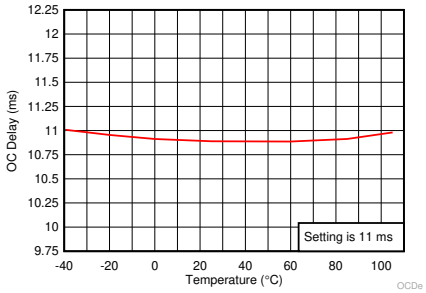

图 7-10. Overcurrent Delay Time vs. Temperature

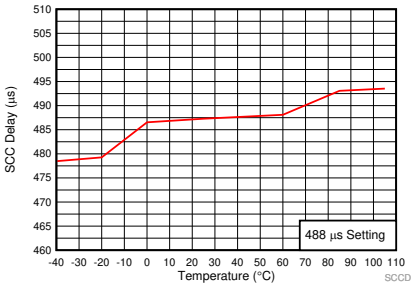

图 7-11. Short Circuit Charge Current Delay Time vs. Temperature

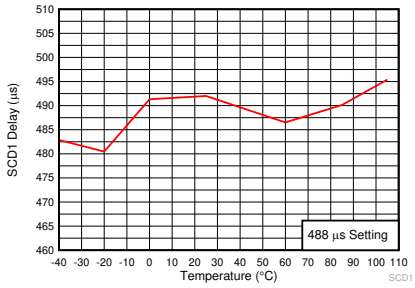

图 7-12. Short Circuit Discharge 1 Delay Time vs. Temperature

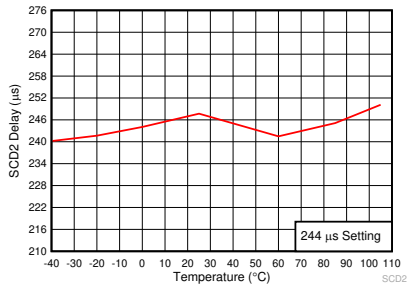

图 7-13. Short Circuit Discharge 2 Delay Time vs. Temperature

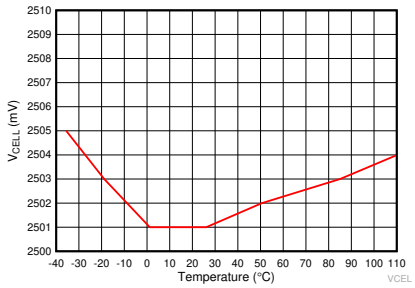

图 7-14. V_{CELL} Measurement at 2.5-V vs. Temperature

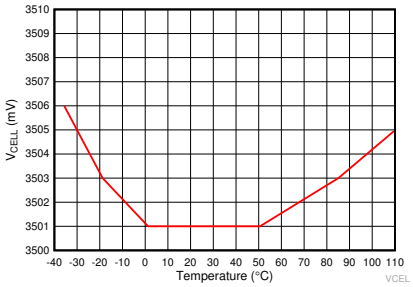

This is the V_{CELL} average for single cell.

图 7-15. V_{CELL} Measurement at 3.5 V vs. Temperature

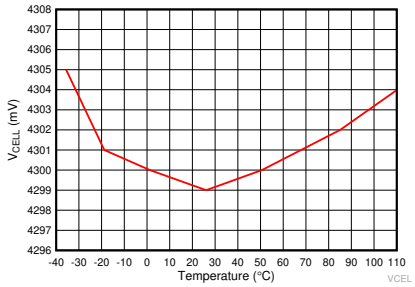

This is the V_{CELL} average for single cell.

图 7-16. V_{CELL} Measurement at 4.3 V vs. Temperature

8 Detailed Description

8.1 Overview

The BQ40Z80 device, incorporating patented Impedance Track™ technology, provides cell balancing while charging or at rest. This fully integrated, single-chip, PACK-based solution provides a rich array of features for gas gauging, protection, and authentication for 2-series to 7-series cell Li-Ion and Li-Polymer battery packs, including a diagnostic lifetime data monitor and black box recorder.

8.2 Functional Block Diagram

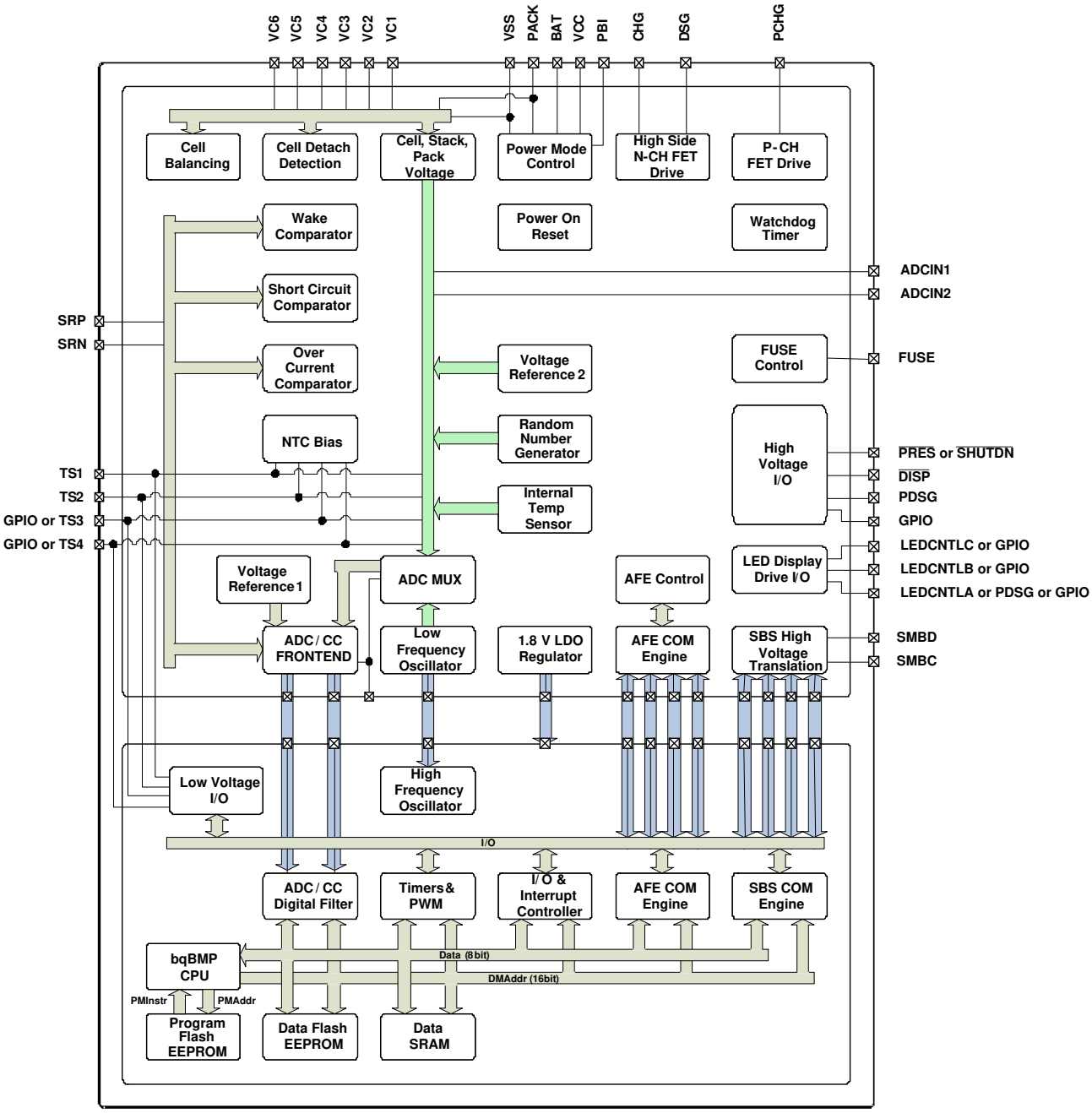

Copyright © 2021 Texas Instruments Incorporated

8.3 Feature Description

8.3.1 Primary (1st Level) Safety Features

The BQ40Z80 supports a wide range of battery and system protection features that can easily be configured. See the *BQ40Z80 Technical Reference Manual* (SLUUBT5) for detailed descriptions of each protection function.

The primary safety features include:

- Cell Overvoltage Protection
- Cell Undervoltage Protection
- Cell Undervoltage Protection Compensated
- Overcurrent in Charge Protection
- Overcurrent in Discharge Protection
- Overload in Discharge Protection
- Short Circuit in Charge Protection
- Short Circuit in Discharge Protection
- Overtemperature in Charge Protection
- Overtemperature in Discharge Protection
- Undertemperature in Charge Protection
- Undertemperature in Discharge Protection
- Overtemperature FET protection
- Precharge Timeout Protection
- Host Watchdog Timeout Protection
- Fast Charge Timeout Protection
- Overcharge Protection
- Overcharging Voltage Protection
- Overcharging Current Protection
- Over Precharge Current Protection

8.3.2 Secondary (2nd Level) Safety Features

The secondary safety features of the BQ40Z80 can be used to indicate more serious faults via the FUSE pin. This pin can be used to blow an in-line fuse to permanently disable the battery pack from charging or discharging. See the *BQ40Z80 Technical Reference Manual* (SLUUBT5) for detailed descriptions of each protection function.

The secondary safety features provide protection against:

- Safety Overvoltage Permanent Failure
- Safety Undervoltage Permanent Failure
- Safety Overtemperature Permanent Failure
- Safety FET Overtemperature Permanent Failure
- Qmax Imbalance Permanent Failure
- Impedance Imbalance Permanent Failure
- Capacity Degradation Permanent Failure
- Cell Balancing Permanent Failure
- Fuse Failure Permanent Failure
- Voltage Imbalance at Rest Permanent Failure
- Voltage Imbalance Active Permanent Failure
- Charge FET Permanent Failure
- Discharge FET Permanent Failure
- AFE Register Permanent Failure
- AFE Communication Permanent Failure
- Second Level Protector Permanent Failure
- Instruction Flash Checksum Permanent Failure

Copyright © 2021 Texas Instruments Incorporated

- Open Cell Connection Permanent Failure
- Data Flash Permanent Failure
- Open Thermistor Permanent Failure

8.3.3 Charge Control Features

The BQ40Z80 charge control features include:

- Supports JEITA temperature ranges. Reports charging voltage and charging current according to the active temperature range
- Handles more complex charging profiles. Allows for splitting the standard temperature range into two sub-ranges and allows for varying the charging current according to the cell voltage
- Reports the appropriate charging current needed for constant current charging and the appropriate charging voltage needed for constant voltage charging to a smart charger using SMBus broadcasts
- Reduces the charge difference of the battery cells in fully charged state of the battery pack gradually using a voltage-based cell balancing algorithm during charging. A voltage threshold can be set up for cell balancing to be active. This prevents fully charged cells from overcharging and causing excessive degradation and also increases the usable pack energy by preventing premature charge termination.
- Supports charge inhibit and charge suspend if battery pack temperature is out of temperature range
- Reports charging fault and also indicates charge status via charge and discharge alarms

8.3.4 Gas Gauging

The BQ40Z80 uses the Impedance Track algorithm to measure and calculate the available capacity in battery cells. The BQ40Z80 accumulates a measure of charge and discharge currents and compensates the charge current measurement for the temperature and state-of-charge of the battery. The BQ40Z80 estimates self-discharge of the battery and also adjusts the self-discharge estimation based on temperature. The device also has TURBO Mode 2.0/DBPTv2 support, which enables the BQ40Z80 to provide the necessary data for the MCU to determine what level of peak power consumption can be applied without causing a system reset or transient battery voltage level spike to trigger termination flags. See the *BQ40Z80 Technical Reference Manual* (SLUUBT5) for further details.

8.3.5 Multifunction Pins

The BQ40Z80 includes several multifunction pins that firmware uses to implement different functions. 图 8-1 is a simplified schematic of an example system implementation that uses a 6-series pack with PRECHARGE mode, six LEDs, two thermistors, and system-present functionality.

Copyright © 2021 Texas Instruments Incorporated

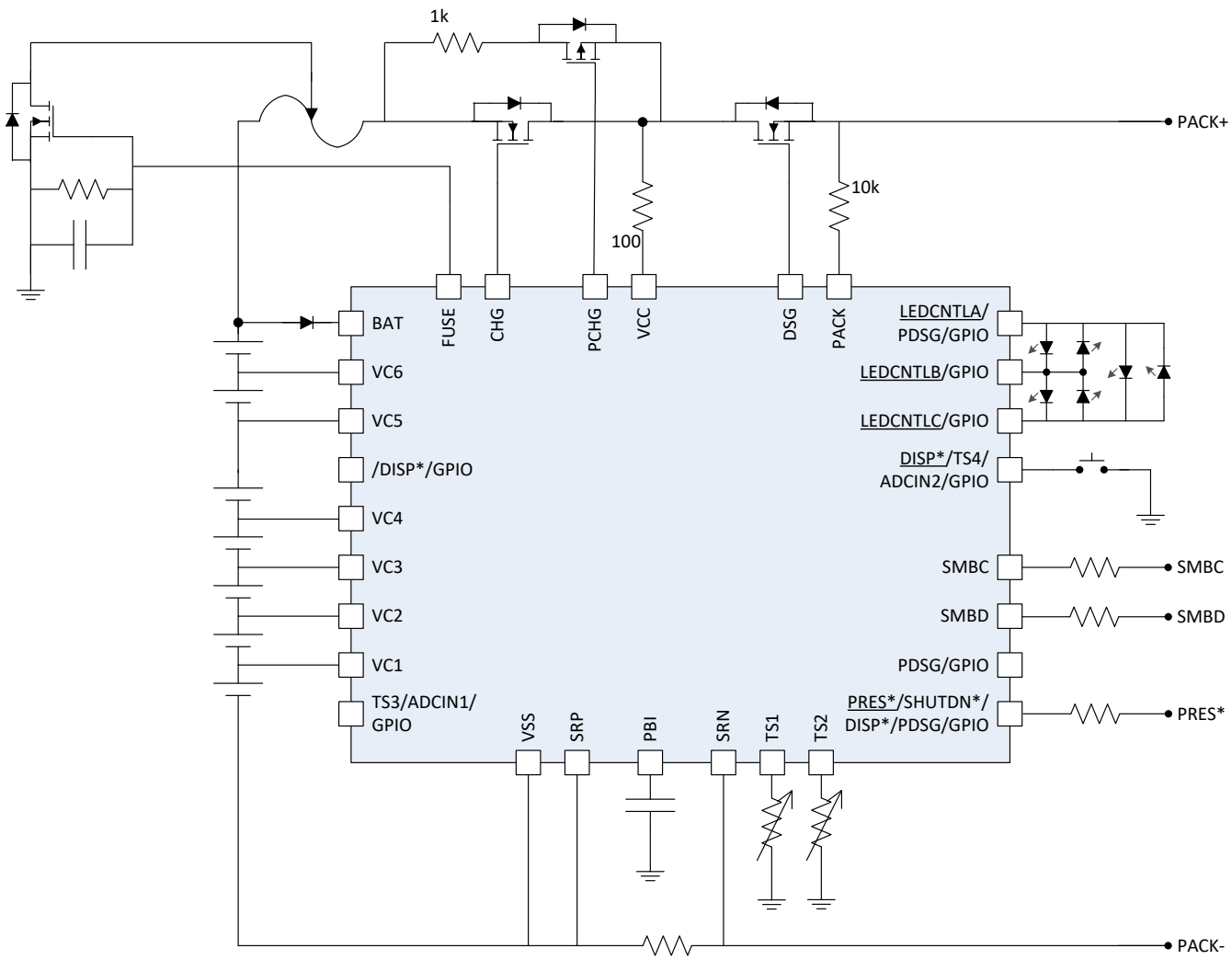

图 8-1. Simplified Schematic of a BQ40Z80 Configuration

表 8-1 shows a summary of other common configurations.

表 8-1. BQ40Z80 Multifunction Pin Combinations

Number of Cells (with Balancing)	Number of Thermistors	LEDs	LED Button	Pre-Discharge	SYSPRES
2S – 6S	4	Yes	Yes (use $\overline{\text{DISP}}$)	Yes (uses PDSG)	Yes

8.3.6 Configuration

8.3.6.1 Oscillator Function

The BQ40Z80 fully integrates the system oscillators and does not require any external components to support this feature.

8.3.6.2 System Present Operation

The BQ40Z80 checks the $\overline{\text{PRES}}$ pin periodically (1 s). If $\overline{\text{PRES}}$ input is pulled to ground by the external system, the BQ40Z80 detects this as system present.

8.3.6.3 Emergency Shutdown

For battery maintenance, the emergency shutdown feature enables a push button action connecting the $\overline{\text{SHUTDN}}$ pin to shut down an embedded battery pack system before removing the battery. A high-to-low

transition of the $\overline{\text{SHUTDN}}$ pin signals the BQ40Z80 to turn off both CHG and DSG FETs, disconnecting the power from the system to safely remove the battery pack. The CHG and DSG FETs can be turned on again by another high-to-low transition detected by the $\overline{\text{SHUTDN}}$ pin or when a data flash configurable timeout is reached.

8.3.6.4 2-Series, 3-Series, 4-Series, 5-Series, or 6-Series Cell Configuration

In a 2-series cell configuration, VC6 is shorted to VC5, VC4, VC3, and VC2. In a 3-series cell configuration, VC6 is shorted to VC5, VC4, and VC3. In a 4-series cell configuration, VC6 is shorted to VC5 and VC4. In a 5-series cell configuration, VC6 is shorted to VC5.

8.3.6.5 Cell Balancing

For up to a 6-series cell configuration, the device supports cell balancing by bypassing the current of each cell during charging or at rest. If the device's internal bypass is used, up to 10 mA can be bypassed and multiple cells can be bypassed at the same time. A higher cell balance current can be achieved by using an external cell balancing circuit. In EXTERNAL CELL BALANCING mode, only one cell at a time can be balanced.

The cell balancing algorithm determines the amount of charge needed to be bypassed to balance the capacity of all cells.

8.3.7 Battery Parameter Measurements

8.3.7.1 Charge and Discharge Counting

The BQ40Z80 uses an integrating delta-sigma analog-to-digital converter (ADC) for current measurement, and a second delta-sigma ADC for individual cell and battery voltage and temperature measurement.

The integrating delta-sigma ADC measures the charge/discharge flow of the battery by measuring the voltage drop across a small-value sense resistor between the SRP and SRN terminals. The integrating ADC measures bipolar signals from –0.1 V to 0.1 V. The BQ40Z80 detects charge activity when $V_{SR} = V_{(SRP)} - V_{(SRN)}$ is positive, and discharge activity when $V_{SR} = V_{(SRP)} - V_{(SRN)}$ is negative. The BQ40Z80 continuously integrates the signal over time, using an internal counter. The fundamental rate of the counter is 0.26 nVh.

8.3.8 Lifetime Data Logging Features

The BQ40Z80 offers lifetime data logging for several critical battery parameters. The following parameters are updated every 10 hours if a difference is detected between values in RAM and data flash:

- Maximum and Minimum Cell Voltages
- Maximum Delta Cell Voltage
- Maximum Charge Current
- Maximum Discharge Current
- Maximum Average Discharge Current
- Maximum Average Discharge Power
- Maximum and Minimum Cell Temperature
- Maximum Delta Cell Temperature
- Maximum and Minimum Internal Sensor Temperature
- Maximum FET Temperature
- Number of Safety Events Occurrences and the Last Cycle of the Occurrence
- Number of Valid Charge Termination and the Last Cycle of the Valid Charge Termination
- Number of Qmax and Ra Updates and the Last Cycle of the Qmax and Ra Updates
- Number of Shutdown Events
- Cell Balancing Time for Each Cell

  (This data is updated every two hours if a difference is detected.)
- Total FW Runtime and Time Spent in Each Temperature Range

  (This data is updated every two hours if a difference is detected.)

Copyright © 2021 Texas Instruments Incorporated

8.3.9 Authentication

To support host authentication, the BQ40Z80 uses Elliptic Curve Cryptography (ECC), which requires a strong 163-bit key system for the authentication process. Additionally, the private key is required to be stored only in the BQ40Z80 Battery Pack Manager, which makes key management more simple and secure. See the *BQ40Z80 Technical Reference Manual* (SLUUBT5) for further details.

8.3.10 LED Display

The BQ40Z80 can drive a 3-, 4-, or 5- segment LED display for remaining capacity indication and/or a permanent fail (PF) error code indication.

8.3.11 IATA Support

The BQ40Z80 supports IATA with several new commands and procedures. See the *BQ40Z80 Technical Reference Manual* (SLUUBT5) for further details.

8.3.12 Voltage

The BQ40Z80 updates the individual series cell voltages at a 1-second interval. The internal ADC of the BQ40Z80 measures the voltage, and scales and calibrates it appropriately. This data is also used to calculate the impedance of the cell for the Impedance Track gas gauging.

8.3.13 Current

The BQ40Z80 uses the SRP and SRN inputs to measure and calculate the battery charge and discharge current using a 1-mΩ to 3-mΩ typ. sense resistor.

8.3.14 Temperature

The BQ40Z80 has an internal temperature sensor and inputs for up to four external temperature sensors. All five temperature sensor options can be individually enabled and configured for cell or FET temperature usage. Two configurable thermistor models are provided to allow the monitoring of cell temperature in addition to FET temperature, which use a different thermistor profile.

8.3.15 Communications

The BQ40Z80 uses SMBus v1.1 with MASTER mode and packet error checking (PEC) options per the SBS specification.

8.3.15.1 SMBus On and Off State

The BQ40Z80 detects an SMBus off state when SMBC and SMBD are low for two or more seconds. Clearing this state requires that either SMBC or SMBD transition high. The communication bus will resume activity within 1 ms.

8.3.15.2 SBS Commands

See the *BQ40Z80 Technical Reference Manual* (SLUUBT5) for further details.

8.4 Device Functional Modes

The BQ40Z80 supports three power modes to reduce power consumption:

- In NORMAL mode, the BQ40Z80 performs measurements, calculations, protection decisions, and data updates in 250-ms intervals. Between these intervals, the BQ40Z80 is in a reduced power stage.
- In SLEEP mode, the BQ40Z80 performs measurements, calculations, protection decisions, and data updates in adjustable time intervals. Between these intervals, the BQ40Z80 is in a reduced power stage. The BQ40Z80 has a wake function that enables exit from SLEEP mode when current flow or failure is detected.
- In SHUTDOWN mode, the BQ40Z80 is completely disabled.

Copyright © 2021 Texas Instruments Incorporated

9 Applications and Implementation

Note

以下应用部分的信息不属于 TI 组件规范，TI 不担保其准确性和完整性。客户应负责确定 TI 组件是否适用于其应用。客户应验证并测试其设计，以确保系统功能。

9.1 Application Information

The BQ40Z80 is a gas gauge with primary protection support, and can be used with a 2-series to 6-series li-ion/li-polymer battery pack. To implement and design a comprehensive set of parameters for a specific battery pack, the Battery Management Studio (BQSTUDIO) graphical user-interface tool must be installed on a PC during development.

9.2 Typical Applications

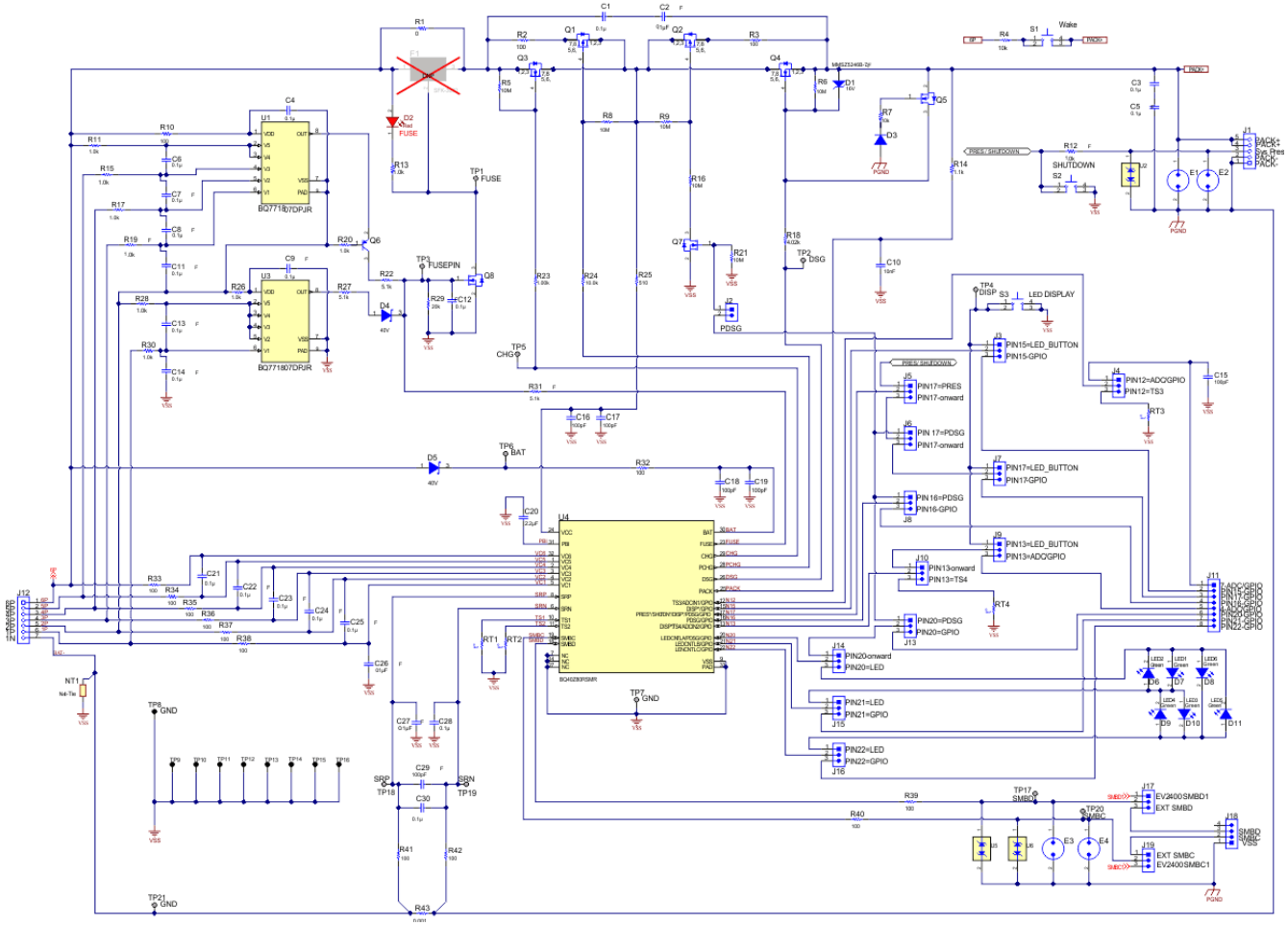

图 9-1. BQ40Z80EVM Gauge and Protector Schematic

Copyright © 2021 Texas Instruments Incorporated

9.2.1 Design Requirements

表 9-1 shows the default settings for the main parameters. Use the BQSTUDIO tool to update the settings to meet the specific application or battery pack configuration requirements.

The device should be calibrated before any gauging test. Follow the BQSTUDIO **Calibration** page to calibrate the device, and use the BQSTUDIO **Chemistry** page to update the match chemistry profile to the device. *Design Parameters* shows all of the settings that are configurable in BQSTUDIO and in the BQ40Z80 firmware.

表 9-1. Design Parameters

DESIGN PARAMETER	EXAMPLE
Cell Configuration	6s (6-series)(1)
Design Capacity	6000 mAh
Device Chemistry	1210 ($LiCoO_2$/graphitized carbon)
Cell Overvoltage at Standard Temperature	4300 mV
Cell Undervoltage	2500 mV
Shutdown Voltage	2300 mV
Overcurrent in CHARGE Mode	6000 mA
Overcurrent in DISCHARGE Mode	– 6000 mA
Short Circuit in CHARGE Mode	0.1 V/Rsense across SRP, SRN
Short Circuit in DISCHARGE Mode	0.1 V/Rsense across SRP, SRN
Safety Overvoltage	4500 mV
Cell Balancing	Disabled
Internal and External Temperature Sensor	External Temperature Sensor is used.
Undertemperature Charging	0°C
Undertemperature Discharging	0°C
BROADCAST Mode	Disabled

(1) When using the device the first time, if the a 1-s or 2-s battery pack is used, then a charger or power supply should be connected to the PACK+ terminal to prevent device shutdown. Then update the cell configuration (see the *BQ40Z80 Technical Reference Manual* [SLUUBT5] for details) before removing the charger connection.

9.2.2 Detailed Design Procedure

This application section uses the BQ40Z80 evaluation module (EVM) and jumper configurations to allow the user to evaluate many of the BQ40Z80 features.

9.2.2.1 Using the BQ40Z80EVM with BQSTUDIO

The firmware installed on the BQSTUDIO tool has BQ40Z80 default values, which are summarized in the *BQ40Z80 Technical Reference Manual* (SLUUBT5). Using the BQSTUDIO tool, these default values can be changed to cater to specific application requirements during development once the system parameters, such as fault trigger thresholds for protection, enable/disable of certain features for operation, configuration of cells, chemistry that best matches the cell used, and more, are known.

9.2.2.2 High-Current Path

The high-current path begins at the PACK+ terminal of the battery pack. As charge current travels through the pack, it finds its way through protection FETs, a chemical fuse, the lithium-ion cells and cell connections, and the sense resistor, and then returns to the PACK – terminal. In addition, some components are placed across the PACK+ and PACK – terminals to reduce effects from electrostatic discharge.

9.2.2.2.1 Protection FETs

Select the N-CH charge and discharge FETs for a given application. For a 7-series cell application, the charge FET must be rated above the max voltage, and for this reason the TI CSD18504Q5A is used. The TI CSD18504Q5A is a 50-A, 40-V device with Rds(on) of 5.3 mΩ when the gate drive voltage is 10 V. For the

discharge FET, it may see a higher voltage, and so the TI CSD18540Q5B is used. The TI CSD18540Q5B is a 100-A, 60-V device with Rds(on) of 1.8 mΩ when the gate drive voltage is 10 V.

If a precharge FET is used, R2 is calculated to limit the precharge current to the desired rate. Be sure to account for the power dissipation of the series resistor. The precharge current is limited to ($V_{CHARGER}$ – V_{BAT})/R2 and maximum power dissipation is ($V_{CHARGER}$ – V_{BAT})^2/R2.

The gates of all protection FETs are pulled to the source with a high-value resistor between the gate and source to ensure they are turned off if the gate drive is open.

Capacitors C1 and C2 help protect the FETs during an ESD event. Using two devices ensures normal operation if one becomes shorted. To have good ESD protection, the copper trace inductance of the capacitor leads must be designed to be as short and wide as possible. Ensure that the voltage rating of both C1 and C2 are adequate to hold off the applied voltage if one of the capacitors becomes shorted.

9.2.2.2.2 Chemical Fuse

The chemical fuse (Dexerials, Uchihashi, and so on) is ignited under command from either the bq771800 secondary voltage protection IC or from the FUSE pin of the gas gauge. Either of these events applies a positive voltage to the gate of Q9, which then sinks current from the third terminal of the fuse, causing it to ignite and open permanently.

It is important to carefully review the fuse specifications and match the required ignition current to that available from the N-CH FET. Ensure that the proper voltage, current, and Rds(on) ratings are used for this device. The fuse control circuit is discussed in detail in 节 9.2.2.3.5.

9.2.2.2.3 Lithium-Ion Cell Connections

The important part about the cell connections is that high current flows through the top and bottom connections; therefore, the voltage sense leads at these points must be made with a Kelvin connection to avoid any errors due to a drop in the high-current copper trace. The location marked 6P indicates the Kelvin connection of the most positive directly measured battery node. The single-point connection at 1N to the low-current ground is needed to avoid an undesired voltage drop through long traces while the gas gauge is measuring the bottom cell voltage.

9.2.2.2.4 Sense Resistor

As with the cell connections, the quality of the Kelvin connections at the sense resistor is critical. The sense resistor must have a temperature coefficient no greater than 50 ppm to minimize current measurement drift with temperature. Choose the value of the sense resistor to correspond to the available overcurrent and short-circuit ranges of the BQ40Z80. Select the smallest value possible to minimize the negative voltage generated on the BQ40Z80 V_{SS} node(s) during a short circuit. This pin has an absolute minimum of –0.3 V. Parallel resistors can be used as long as good Kelvin sensing is ensured. The device is designed to support a 1-mΩ to 3-mΩ sense resistor, and a 1-mΩ sense resistor is used, shown as R52. When using 1-mΩ, large currents during a short circuit event can cause the voltage across the sense resistor to exceed the abs max of the pin. Therefore, it is required to place 100-Ω series resistors R47 and R48 as shown in the schematic.

9.2.2.2.5 ESD Mitigation

A pair of series 0.1-µF ceramic capacitors is placed across the PACK+ and PACK– terminals to help mitigate external electrostatic discharges. The two devices in series ensure continued operation of the pack if one of the capacitors becomes shorted.

Optionally, a transorb such as the SMBJ2A can be placed across the terminals to further improve ESD immunity.

9.2.2.3 Gas Gauge Circuit

The gas gauge circuit includes the BQ40Z80 and its peripheral components. These components are divided into the following groups: differential low-pass filter, PBI, system present, SMBus communication, FUSE circuit, and LED.

Copyright © 2021 Texas Instruments Incorporated

9.2.2.3.1 Coulomb-Counting Interface

The BQ40Z80 uses an integrating delta-sigma ADC for current measurements. Add a 100-Ω resistor from the sense resistor to the SRP and SRN inputs of the device. Place a 100-pF (C29) filter capacitor across the SRP and SRN inputs. Optional 0.1-µF filter capacitors (C26 and C27) can be added for additional noise filtering, if required for your circuit.

9.2.2.3.2 Power Supply Decoupling and PBI

The BQ40Z80 has an internal LDO that is internally compensated and does not require an external decoupling capacitor.

The PBI pin is used as a power supply backup input pin providing power during brief transient power outages. A standard 2.2-µF ceramic capacitor is connected from the PBI pin to ground.

9.2.2.3.3 System Present

The System Present signal is used to inform the gas gauge whether the pack is installed into or removed from the system. In the host system, this pin is grounded. The $\overline{\text{PRES}}$ pin of the BQ40Z80 is used if J5[1, 2] jumper is installed, and is occasionally sampled to test for system present. To save power, an internal pullup is provided by the gas gauge during a brief 4-µs sampling pulse once per second. A resistor can be used to pull the signal low and the resistance must be 20 kΩ or lower to ensure that the test pulse is lower than the VIL limit. The pullup current source is typically 10 µA to 20 µA.

Because the System Present signal is part of the pack connector interface to the outside world, it must be protected from external electrostatic discharge events. An integrated ESD protection on the $\overline{\text{PRES}}$ device pin reduces the external protection requirement to just R12 for an 8-kV ESD contact rating. However, if it is possible that the System Present signal may short to PACK+, then an E2 spark gap must be included for high-voltage protection.

9.2.2.3.4 SMBus Communication

The SMBus clock and data pins have integrated high-voltage ESD protection circuits; however, adding a ESD protection device, TPD1E10B06D (U5 and U6) and series resistor (R50 and R51), provides more robust ESD performance.

The SMBus clock and data lines have an internal pulldown. When the gas gauge senses that both lines are low (such as during removal of the pack), the device performs auto-offset calibration and then goes into SLEEP mode to conserve power.

9.2.2.3.5 FUSE Circuitry

The FUSE pin of the BQ40Z80 is designed to ignite the chemical fuse if one of the various safety criteria is violated. The FUSE pin also monitors the state of the secondary-voltage protection IC. Q9 ignites the chemical fuse when its gate is high. The output of the bq7718xx is divided by R22 and R30, which provides adequate gate drive for Q9 while guarding against excessive back current into the bq7718xx if the FUSE signal is high.

Using C8 is generally a good practice, especially for RFI immunity. C8 may be removed, if desired, because the chemical fuse is a comparatively slow device and is not affected by any sub-microsecond glitches that come from the FUSE output during the cell connection process.

If the AFEFUSE output is not used, it should be connected to VSS.

When the BQ40Z80 is commanded to ignite the chemical fuse, the FUSE pin activates to give a typical 8-V output.

9.2.2.4 Secondary-Current Protection

The BQ40Z80 provides secondary overcurrent and short-circuit protection, cell balancing, cell voltage multiplexing, and voltage translation. The following discussion examines cell and battery inputs, pack and FET control, temperature output, and cell balancing.

9.2.2.4.1 Cell and Battery Inputs

Each cell input is conditioned with a simple RC filter, which provides ESD protection during cell connect and acts to filter unwanted voltage transients. The resistor value allows some trade-off for cell balancing versus safety protection.

The BQ40Z80 has integrated cell balancing FETs The internal cell balancing FETs allow the AFE to bypass cell current around a given cell or numerous cells. External series resistors placed between the cell connections and the VCx I/O pins set the balancing current magnitude. The internal FETs provide a 200-Ω resistance (2 V < VDS < 4 V). Series input resistors between 100 Ω and 1 kΩ are recommended for effective cell balancing.

The BAT input uses a diode (D6) to isolate and decouple it from the cells in the event of a transient dip in voltage caused by a short-circuit event.

9.2.2.4.2 External Cell Balancing

Internal cell balancing can only support up to 10 mA. External cell balancing provides another option for faster cell balancing. For details, refer to the application note, *Fast Cell Balancing Using External MOSFET* (SLUA420).

9.2.2.4.3 PACK and FET Control

The PACK and V_{CC} inputs provide power to the BQ40Z80 from the charger. The PACK input also provides a method to measure and detect the presence of a charger. The PACK input uses a 100-Ω resistor; whereas, the V_{CC} input uses a diode to guard against input transients and prevents misoperation of the date driver during short-circuit events.

The N-CH charge and discharge FETs are controlled with 10-kΩ series gate resistors, which provide a switching time constant of a few microseconds. The 10-MΩ resistors ensure that the FETs are off in the event of an open connection to the FET drivers. Q4 is provided to protect the discharge FET (Q3) in the event of a reverse-connected charger. Without Q4, Q3 can be driven into its linear region and suffer severe damage if the PACK+ input becomes slightly negative. Q4 turns on in that case to protect Q3 by shorting its gate to source. To use the simple ground gate circuit, the FET must have a low gate turn-on threshold. If it is desired to use a more standard device, such as the 2N7002, as the reference schematic, the gate should be biased up to 3.3 V with a high-value resistor. The BQ40Z80 device has the capability to provide a current-limited charging path typically used for low battery voltage or low temperature charging. The BQ40Z80 device uses an external P-CH, precharge FET controlled by PCHG.

9.2.2.4.4 Pre-Discharge Control

Some applications have a large capacitive load that requires a pre-discharge feature that can slowly charge the cap and avoid a large current that may trip the OC protection. The BQ40Z80 device can be configured to use the PDSG output of Pins 16, 17, or 20 to drive the N-CH FET Q7 to turn on the pre-discharge P-CH FET Q5. The precharge rate can be set by adjusting the resistor R9.

9.2.2.4.5 Temperature Output

For the BQ40Z80 device, up to four thermistor inputs can be configured. TS1, TS2, TS3, and TS4 provide thermistor drive-under program control. Each pin can be enabled with an integrated 18-kΩ (typical) linearization pullup resistor to support the use of a 10-kΩ at 25°C (103) NTC external thermistor, such as a Mitsubishi BN35-3H103. The reference design includes four 10-kΩ thermistors: RT1, RT2, RT3, and RT4.

9.2.2.4.6 LEDs

Multifunction Pins 20, 21, and 22 can be configured as three LED control outputs that provide constant current sinks for driving external LEDs. These outputs are configured to provide voltage and control for up to six LEDs. No external bias voltage is required. Unused LEDCNTL pins can remain open or they can be connected to V_{SS}. The $\overline{DISP}$ pin should be connected to V_{SS} if the LED feature is not used.

Copyright © 2021 Texas Instruments Incorporated

9.2.3 Application Curve

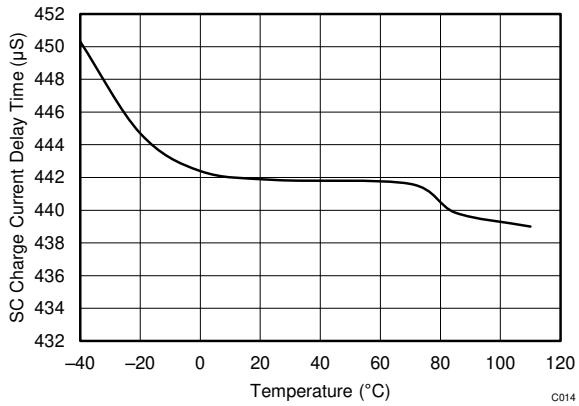

图 9-2. Short Circuit Charge Current Delay Time vs. Temperature

10 Power Supply Recommendations

The device manages its supply voltage dynamically according to the operation conditions. Normally, the BAT input is the primary power source to the device. The BAT pin should be connected to the positive termination of the battery stack. The input voltage for the BAT pin ranges from 2.2 V to 32 V.

The VCC pin is the secondary power input, which activates when the BAT voltage falls below minimum V_{CC}. This enables the device to source power from a charger (if present) connected to the PACK pin. The VCC pin should be connected to the common drain of the CHG and DSG FETs. The charger input should be connected to the PACK pin.

11 Layout

11.1 Layout Guidelines

A battery fuel gauge circuit board is a challenging environment due to the fundamental incompatibility of high-current traces and ultra-low current semiconductor devices. The best way to protect against unwanted trace-to-trace coupling is with a component placement, such as that shown in 图 11-1, where the high-current section is on the opposite side of the board from the electronic devices. This may not possible in many situations due to mechanical constraints. Still, every attempt should be made to route high-current traces away from signal traces, which enter the BQ40Z80 directly. IC references and registers can be disturbed and in rare cases damaged due to magnetic and capacitive coupling from the high-current path.

Note

During surge current and ESD events, the high-current traces appear inductive and can couple unwanted noise into sensitive nodes of the gas gauge electronics, as illustrated in 图 11-2.

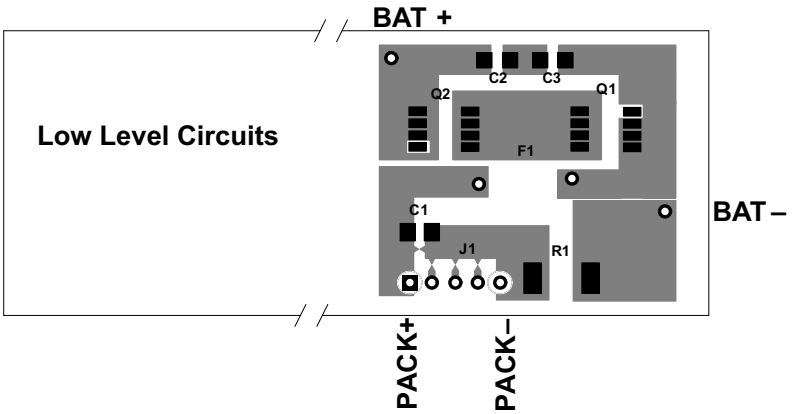

Copyright © 2016, Texas Instruments Incorporated

图 11-1. Separating High- and Low-Current Sections Provides an Advantage in Noise Immunity

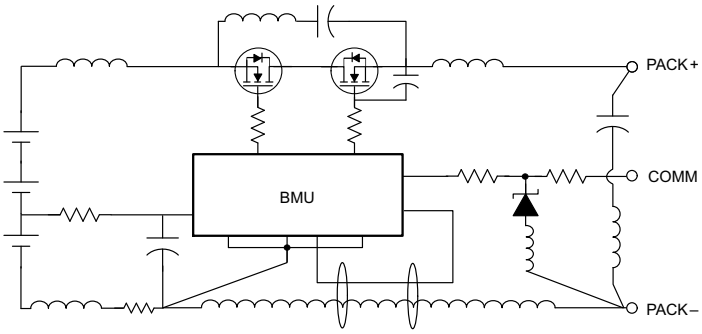

Copyright © 2016, Texas Instruments Incorporated

图 11-2. Avoid Close Spacing Between High-Current and Low-Level Signal Lines

Kelvin voltage sensing is extremely important in order to accurately measure current and top and bottom cell voltages. Place all filter components as close as possible to the device. Route the traces from the sense resistor in parallel to the filter circuit. Adding a ground plane around the filter network can add additional noise immunity. 图 11-3 and 图 11-4 demonstrate correct kelvin current sensing.

Copyright © 2021 Texas Instruments Incorporated

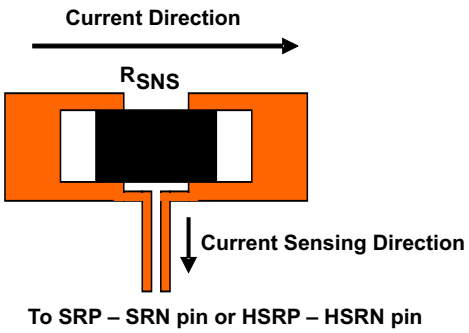

图 11-3. Sensing Resistor PCB Layout

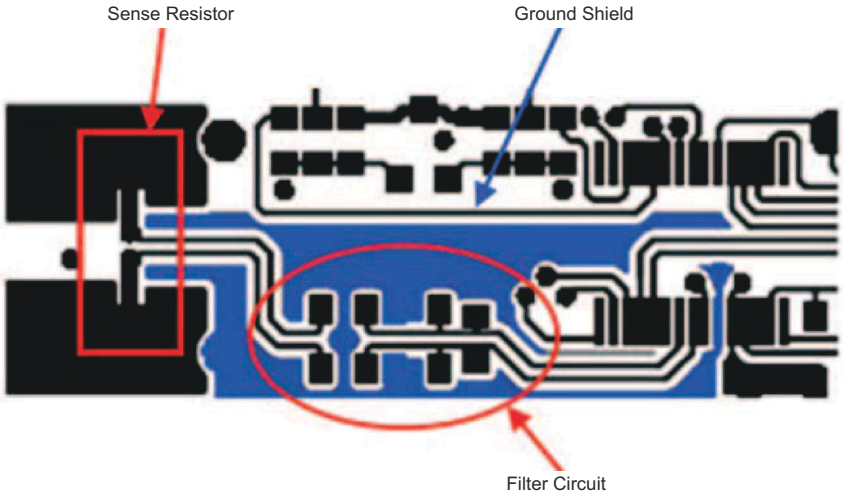

图 11-4. Sense Resistor, Ground Shield, and Filter Circuit Layout

11.1.1 Protector FET Bypass and Pack Terminal Bypass Capacitors

Use wide copper traces to lower the inductance of the bypass capacitor circuit. In 图 11-5, an example layout demonstrates this technique. Note that in the *BQ40Z80EVM-Rev A Schematic*, these capacitors are C1, C2, C3, and C4.

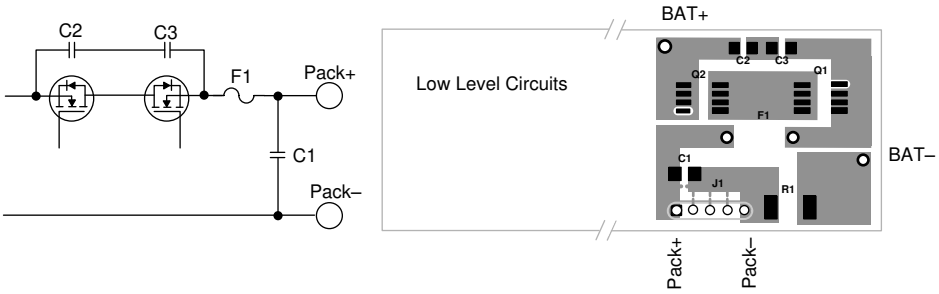

Copyright © 2016, Texas Instruments Incorporated

图 11-5. Wide Copper Traces Lower the Inductance of Bypass Capacitors C1, C2, and C3

11.1.2 ESD Spark Gap

Protect the SMBus clock, data, and other communication lines from ESD with a spark gap at the connector. The pattern in 图 11-6 is recommended, with 0.2-mm spacing between the points.

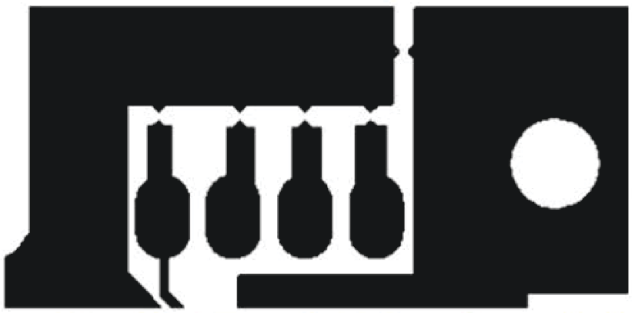

图 11-6. Recommended Spark-Gap Pattern Helps Protect Communication Lines from ESD

11.2 Layout Examples

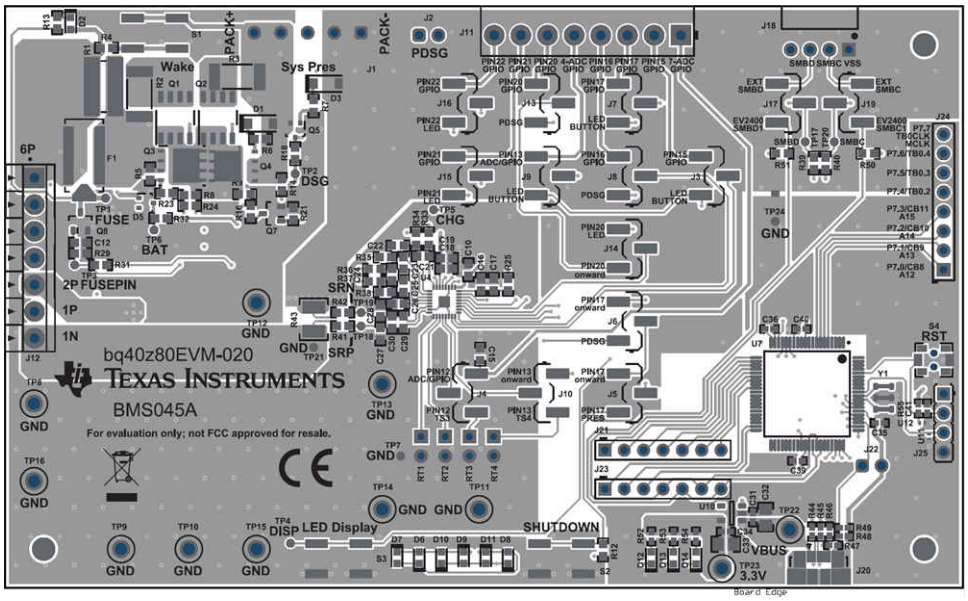

图 11-7. BQ40Z80EVM Top Composite

Copyright © 2021 Texas Instruments Incorporated

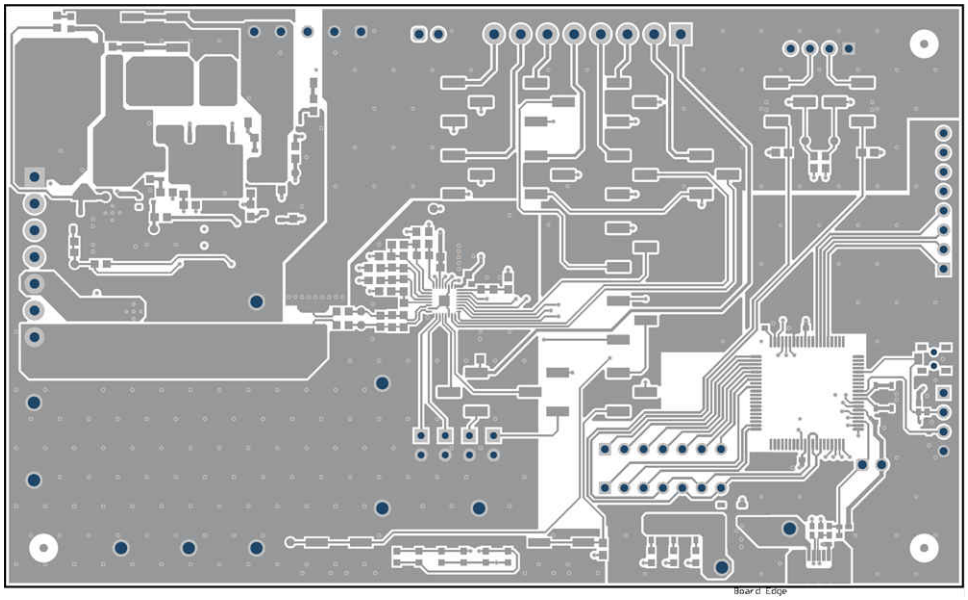

图 11-8. BQ40Z80EVM Top Layer

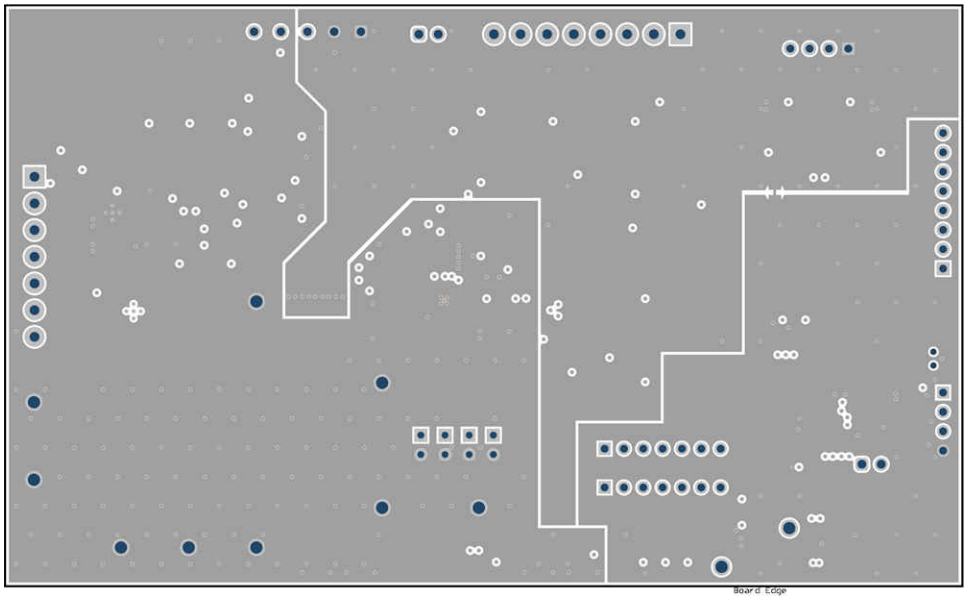

图 11-9. BQ40Z80EVM GND Layer

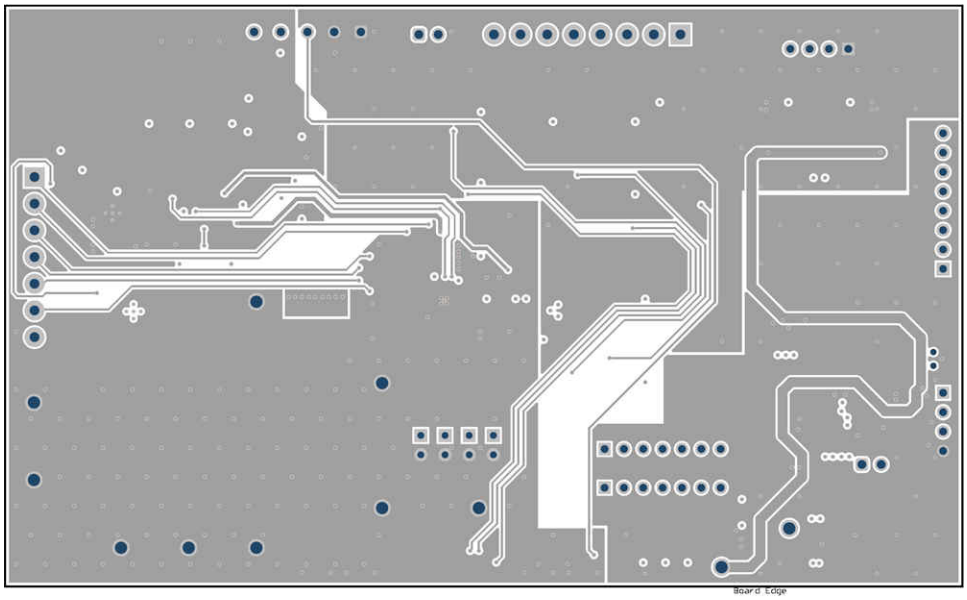

图 11-10. BQ40Z80EVM Signal Layer

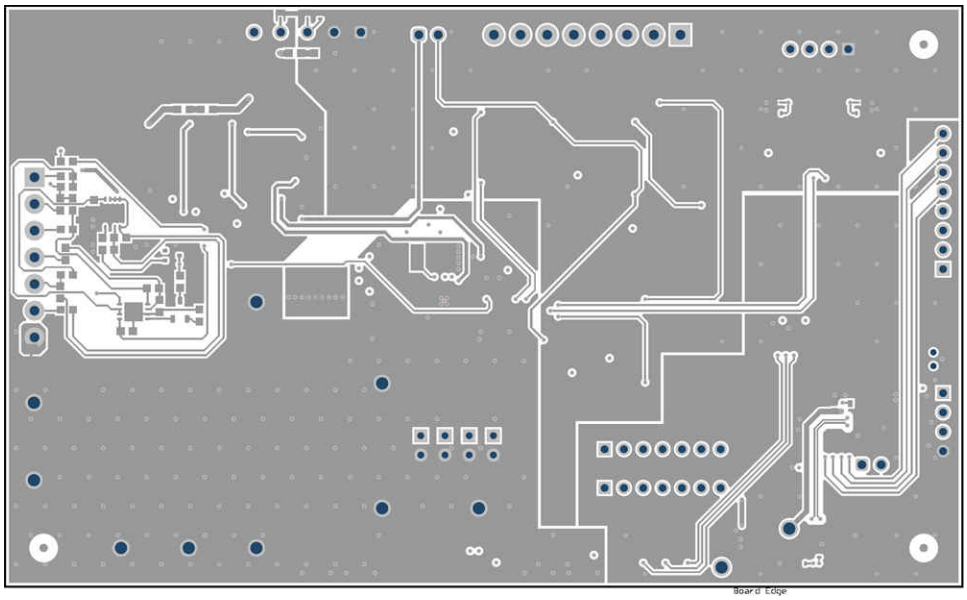

图 11-11. BQ40Z80EVM Bottom Layer

Copyright © 2021 Texas Instruments Incorporated

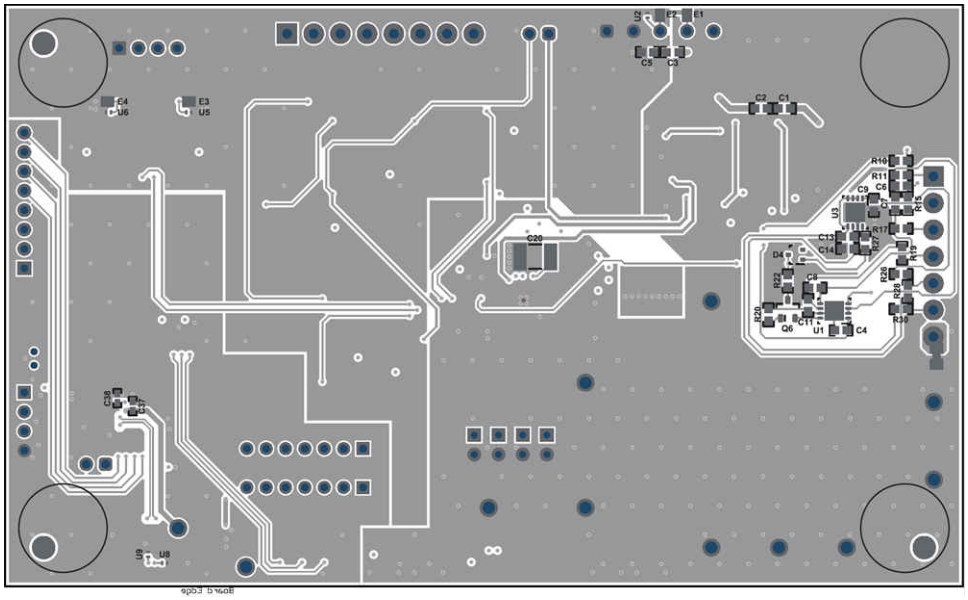

图 11-12. BQ40Z80EVM Bottom Layer Composite

12 Device and Documentation Support

12.1 Documentation Support

12.1.1 Related Documentation

For related documentation, see the following:

- *BQ40Z80 Technical Reference Manual* (SLUUBT5)
- *BQ40Z80 Manufacture, Production, and Calibration Application Note* (SLUA868)
- *BQ40Z80EVM Li-Ion Battery Pack Manager Evaluation Module User's Guide* (SLUUBZ5)
- *How to Complete a Successful Learning Cycle for the BQ40Z80 Application Note* (SLUA848)
- *TI Fuel Gauge Authentication Key Packager and Programmer Tools User's Guide* (SLUUBU3)

12.2 Receiving Notification of Documentation Updates

To receive notification of documentation updates, navigate to the device product folder on ti.com. In the upper right corner, click on *Alert me* to register and receive a weekly digest of any product information that has changed. For change details, review the revision history included in any revised document.

12.3 支持资源

TI E2E™ 支持论坛是工程师的重要参考资料，可直接从专家获得快速、经过验证的解答和设计帮助。搜索现有解答或提出自己的问题可获得所需的快速设计帮助。

链接的内容由各个贡献者“按原样”提供。这些内容并不构成 TI 技术规范，并且不一定反映 TI 的观点；请参阅 TI 的《使用条款》。

12.4 Trademarks

Impedance Track™ and TI E2E™ are trademarks of Texas Instruments.
Impedance Track® is a registered trademark of Texas Instruments.
Intel® is a registered trademark of Intel.
所有商标均为其各自所有者的财产。

12.5 静电放电警告

静电放电 (ESD) 会损坏这个集成电路。德州仪器 (TI) 建议通过适当的预防措施处理所有集成电路。如果不遵守正确的处理和安装程序，可能会损坏集成电路。

ESD 的损坏小至导致微小的性能降级，大至整个器件故障。精密的集成电路可能更容易受到损坏，这是因为非常细微的参数更改都可能会导致器件与其发布的规格不相符。

12.6 术语表

TI 术语表	本术语表列出并解释了术语、首字母缩略词和定义。

13 Mechanical, Packaging, and Orderable Information

The following pages include mechanical, package, and orderable information. This information is the most current data available for the designated devices. This data is subject to change without notice and revision of this document. For browser-based versions of this data sheet, refer to the left-hand navigation.

Copyright © 2021 Texas Instruments Incorporated

PACKAGING INFORMATION

Orderable part number	Status (1)	Material type (2)	Package | Pins	Package qty | Carrier	RoHS (3)	Lead finish/ Ball material (4)	MSL rating/ Peak reflow (5)	Op temp (°C)	Part marking (6)
BQ40Z80RSMR	Active	Production	VQFN (RSM) | 32	3000 | LARGE T&R	Yes	NIPDAU	Level-1-260C-UNLIM	-40 to 85	BQ40Z80
BQ40Z80RSMR.A	Active	Production	VQFN (RSM) | 32	3000 | LARGE T&R	Yes	NIPDAU	Level-1-260C-UNLIM	-40 to 85	BQ40Z80
BQ40Z80RSMR.B	Active	Production	VQFN (RSM) | 32	3000 | LARGE T&R	Yes	NIPDAU	Level-1-260C-UNLIM	-40 to 85	BQ40Z80
BQ40Z80RSMT	Active	Production	VQFN (RSM) | 32	250 | SMALL T&R	Yes	NIPDAU	Level-1-260C-UNLIM	-40 to 85	BQ40Z80
BQ40Z80RSMT.A	Active	Production	VQFN (RSM) | 32	250 | SMALL T&R	Yes	NIPDAU	Level-1-260C-UNLIM	-40 to 85	BQ40Z80
BQ40Z80RSMT.B	Active	Production	VQFN (RSM) | 32	250 | SMALL T&R	Yes	NIPDAU	Level-1-260C-UNLIM	-40 to 85	BQ40Z80
BQ40Z80RSMTG4.A	Active	Production	VQFN (RSM) | 32	250 | SMALL T&R	Yes	NIPDAU	Level-1-260C-UNLIM	-40 to 85	BQ40Z80
BQ40Z80RSMTG4.B	Active	Production	VQFN (RSM) | 32	250 | SMALL T&R	Yes	NIPDAU	Level-1-260C-UNLIM	-40 to 85	BQ40Z80

(1) **Status:** For more details on status, see our product life cycle.

(2) **Material type:** When designated, preproduction parts are prototypes/experimental devices, and are not yet approved or released for full production. Testing and final process, including without limitation quality assurance, reliability performance testing, and/or process qualification, may not yet be complete, and this item is subject to further changes or possible discontinuation. If available for ordering, purchases will be subject to an additional waiver at checkout, and are intended for early internal evaluation purposes only. These items are sold without warranties of any kind.

(3) **RoHS values:** Yes, No, RoHS Exempt. See the TI RoHS Statement for additional information and value definition.

(4) **Lead finish/Ball material:** Parts may have multiple material finish options. Finish options are separated by a vertical ruled line. Lead finish/Ball material values may wrap to two lines if the finish value exceeds the maximum column width.

(5) **MSL rating/Peak reflow:** The moisture sensitivity level ratings and peak solder (reflow) temperatures. In the event that a part has multiple moisture sensitivity ratings, only the lowest level per JEDEC standards is shown. Refer to the shipping label for the actual reflow temperature that will be used to mount the part to the printed circuit board.

(6) **Part marking:** There may be an additional marking, which relates to the logo, the lot trace code information, or the environmental category of the part.

Multiple part markings will be inside parentheses. Only one part marking contained in parentheses and separated by a "~" will appear on a part. If a line is indented then it is a continuation of the previous line and the two combined represent the entire part marking for that device.

Important Information and Disclaimer: The information provided on this page represents TI's knowledge and belief as of the date that it is provided. TI bases its knowledge and belief on information provided by third parties, and makes no representation or warranty as to the accuracy of such information. Efforts are underway to better integrate information from third parties. TI has taken and continues to take reasonable steps to provide representative and accurate information but may not have conducted destructive testing or chemical analysis on incoming materials and chemicals. TI and TI suppliers consider certain information to be proprietary, and thus CAS numbers and other limited information may not be available for release.

In no event shall TI's liability arising out of such information exceed the total purchase price of the TI part(s) at issue in this document sold by TI to Customer on an annual basis.

TAPE AND REEL INFORMATION

REEL DIMENSIONS

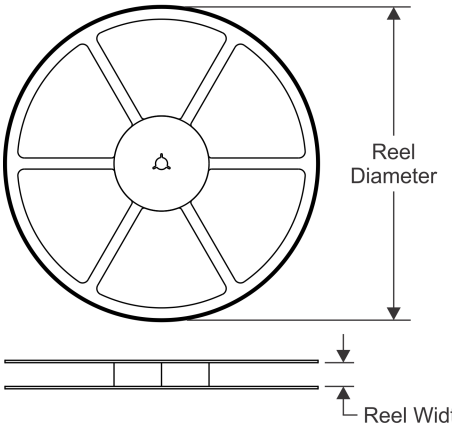

TAPE DIMENSIONS

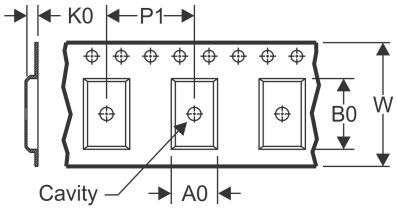

A0	Dimension designed to accommodate the component width
B0	Dimension designed to accommodate the component length
K0	Dimension designed to accommodate the component thickness
W	Overall width of the carrier tape
P1	Pitch between successive cavity centers

QUADRANT ASSIGNMENTS FOR PIN 1 ORIENTATION IN TAPE

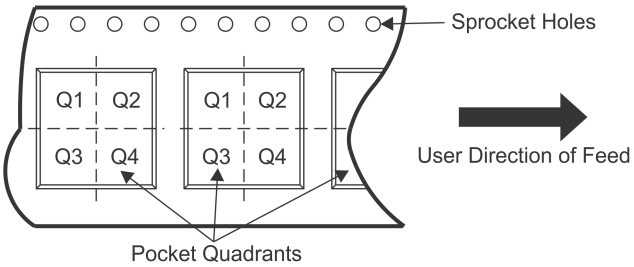

*All dimensions are nominal

Device	Package Type	Package Drawing	Pins	SPQ	Reel Diameter (mm)	Reel Width W1 (mm)	A0 (mm)	B0 (mm)	K0 (mm)	P1 (mm)	W (mm)	Pin1 Quadrant
BQ40Z80RSMR	VQFN	RSM	32	3000	330.0	12.4	4.25	4.25	1.15	8.0	12.0	Q2
BQ40Z80RSMT	VQFN	RSM	32	250	180.0	12.4	4.25	4.25	1.15	8.0	12.0	Q2

TAPE AND REEL BOX DIMENSIONS

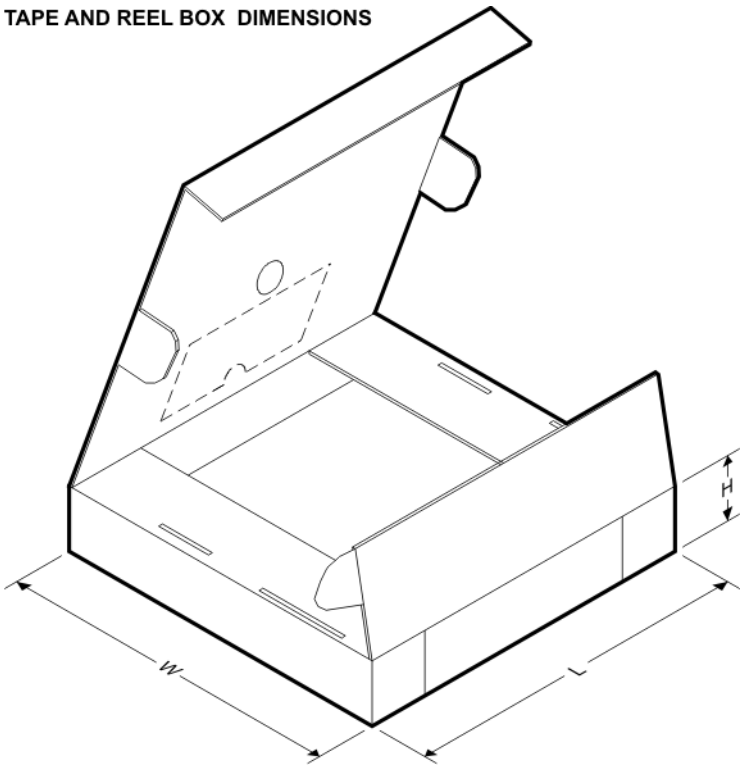

*All dimensions are nominal

Device	Package Type	Package Drawing	Pins	SPQ	Length (mm)	Width (mm)	Height (mm)
BQ40Z80RSMR	VQFN	RSM	32	3000	367.0	367.0	35.0
BQ40Z80RSMT	VQFN	RSM	32	250	210.0	185.0	35.0

GENERIC PACKAGE VIEW

RSM 32

VQFN - 1 mm max height

4 x 4, 0.4 mm pitch

PLASTIC QUAD FLATPACK - NO LEAD

This image is a representation of the package family, actual package may vary.
Refer to the product data sheet for package details.

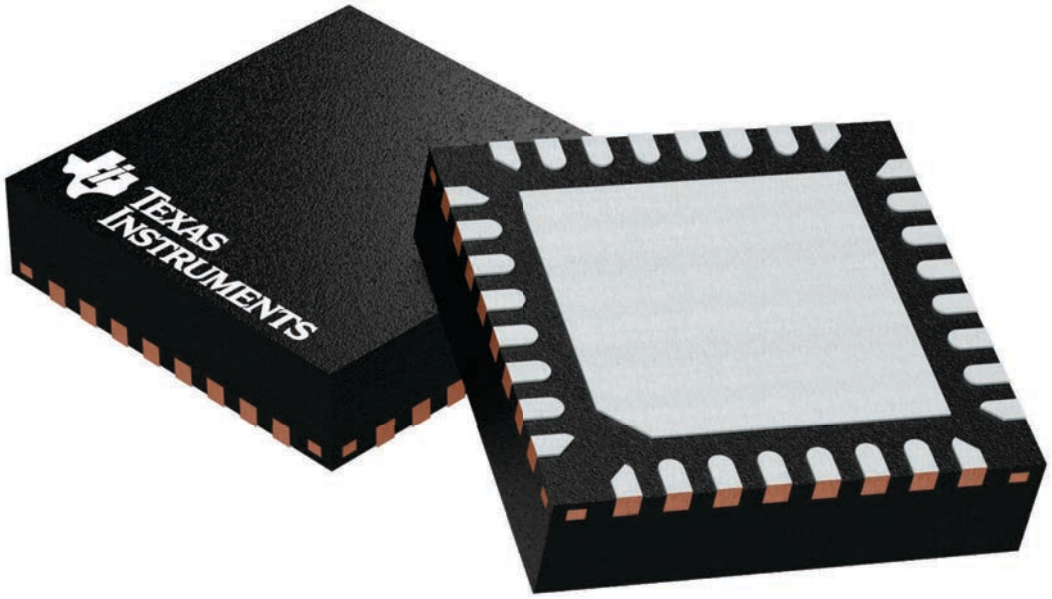

4224982/A

RSM0032A

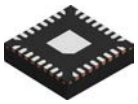

PACKAGE OUTLINE

VQFN - 1 mm max height

PLASTIC QUAD FLATPACK - NO LEAD

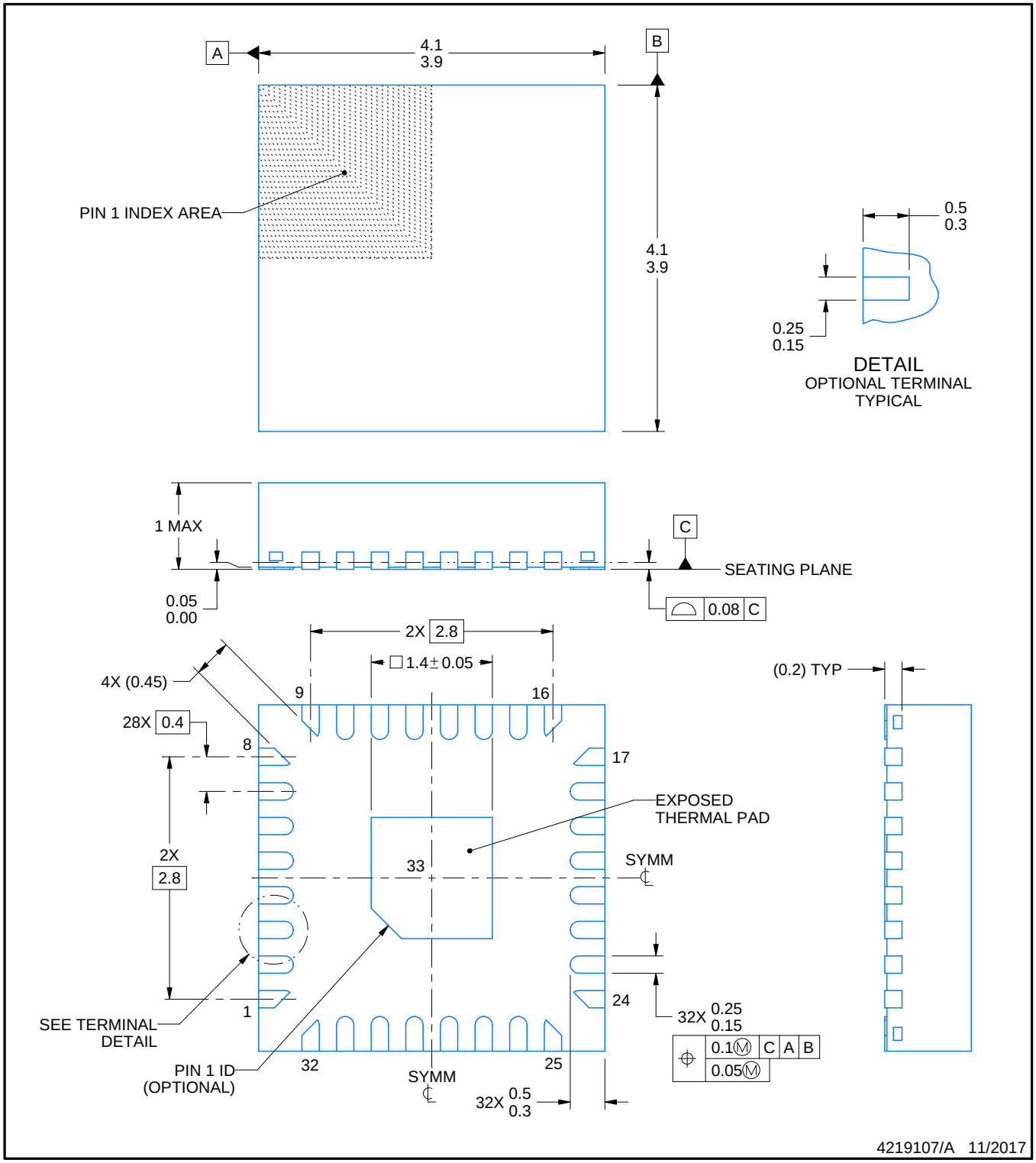

NOTES:

1. All linear dimensions are in millimeters. Any dimensions in parenthesis are for reference only. Dimensioning and tolerancing per ASME Y14.5M.
2. This drawing is subject to change without notice.
3. The package thermal pad must be soldered to the printed circuit board for thermal and mechanical performance.

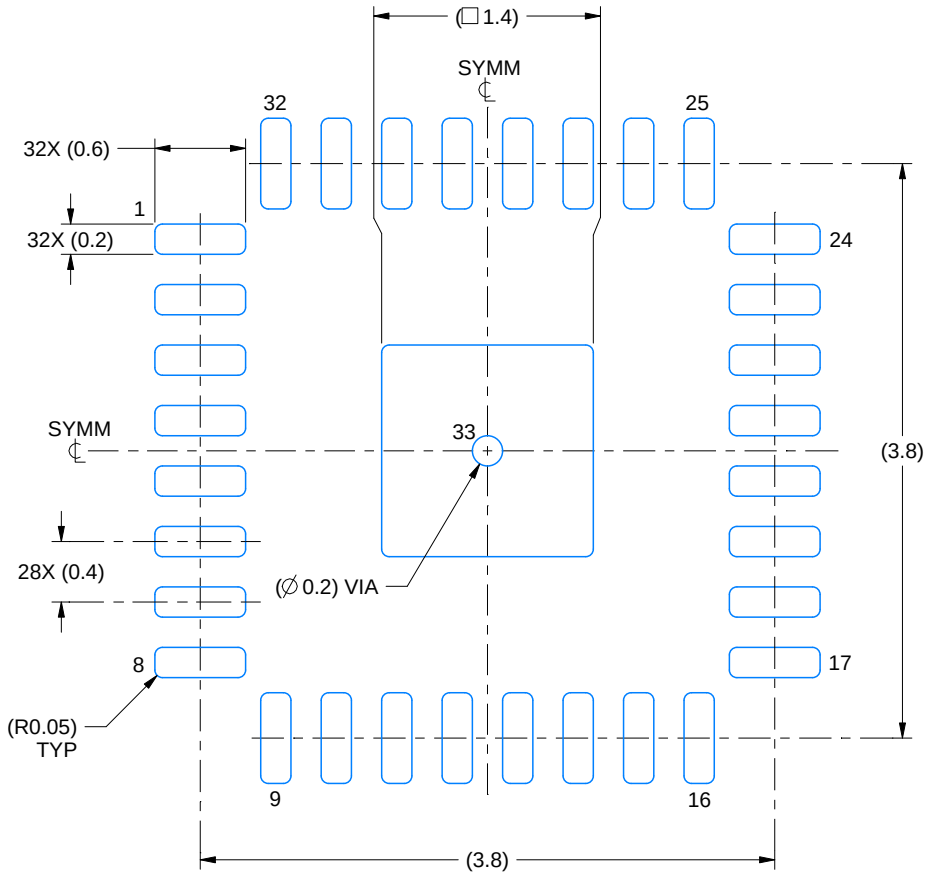

LAND PATTERN EXAMPLE
EXPOSED METAL SHOWN
SCALE:20X

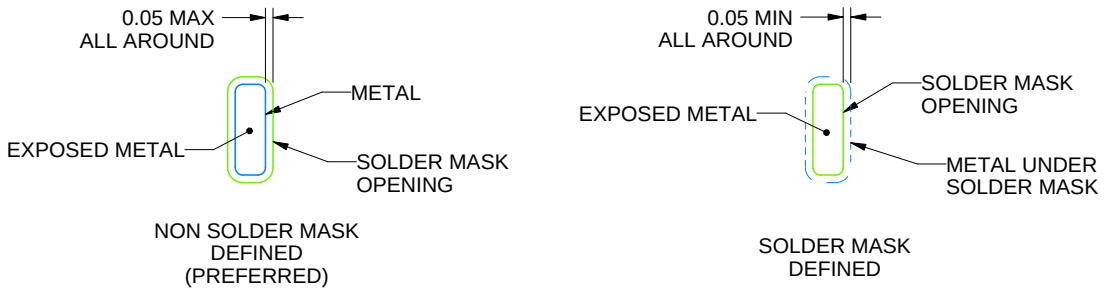

SOLDER MASK DETAILS

4219107/A 11/2017

NOTES: (continued)

4. This package is designed to be soldered to a thermal pad on the board. For more information, see Texas Instruments literature number SLUA271 (www.ti.com/lit/slua271).
5. Vias are optional depending on application, refer to device data sheet. If any vias are implemented, refer to their locations shown on this view. It is recommended that vias under paste be filled, plugged or tented.

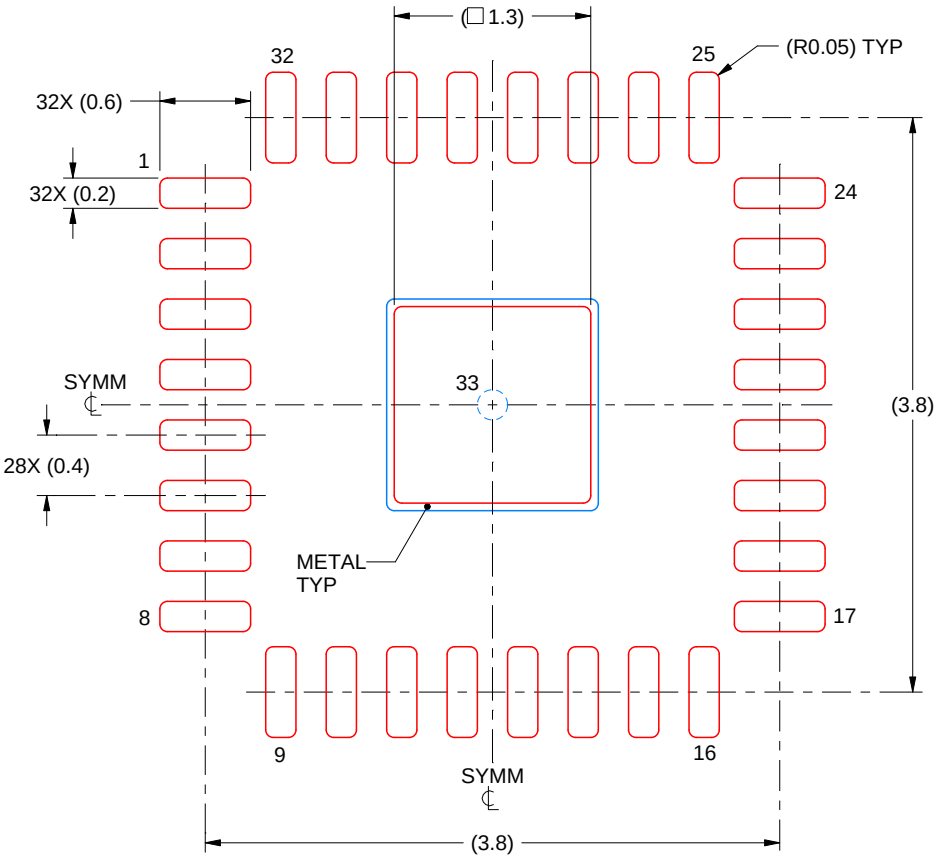

SOLDER PASTE EXAMPLE
BASED ON 0.1 mm THICK STENCIL

EXPOSED PAD 33:
86% PRINTED SOLDER COVERAGE BY AREA UNDER PACKAGE
SCALE:20X

4219107/A 11/2017

NOTES: (continued)

6. Laser cutting apertures with trapezoidal walls and rounded corners may offer better paste release. IPC-7525 may have alternate design recommendations.

重要通知和免责声明

TI“按原样”提供技术和可靠性数据（包括数据表）、设计资源（包括参考设计）、应用或其他设计建议、网络工具、安全信息和其他资源，不保证没有瑕疵且不做出任何明示或暗示的担保，包括但不限于对适销性、某特定用途方面的适用性或不侵犯任何第三方知识产权的暗示担保。

这些资源可供使用 TI 产品进行设计的熟练开发人员使用。您将自行承担以下全部责任：(1) 针对您的应用选择合适的 TI 产品，(2) 设计、验证并测试您的应用，(3) 确保您的应用满足相应标准以及任何其他功能安全、信息安全、监管或其他要求。

这些资源如有变更，恕不另行通知。TI 授权您仅可将这些资源用于研发本资源所述的 TI 产品的相关应用。 严禁以其他方式对这些资源进行复制或展示。您无权使用任何其他 TI 知识产权或任何第三方知识产权。您应全额赔偿因在这些资源的使用中对 TI 及其代表造成的任何索赔、损害、成本、损失和债务，TI 对此概不负责。

TI 提供的产品受 TI 的销售条款或 ti.com 上其他适用条款/TI 产品随附的其他适用条款的约束。TI 提供这些资源并不会扩展或以其他方式更改 TI 针对 TI 产品发布的适用的担保或担保免责声明。

TI 反对并拒绝您可能提出的任何其他或不同的条款。

邮寄地址：Texas Instruments, Post Office Box 655303, Dallas, Texas 75265
版权所有 © 2025，德州仪器 (TI) 公司